SUPERINDUSTRIA Y COMERCIO
Radicacion : 00032378 00010000 Folios: 2
Fecha (AMD): 2004-08-31 11:43:17
Tramite : 002 PATENTES D 332 PRESENTAC 411 PRESENTAC
Dependencia: 2020 DIVISION DE NUEVAS CREACIONES

85
86

Señor

SUPERINTENDENTE DELEGADO PARA LA PROPIEDAD INDUSTRIAL

DIVISION DE NUEVAS CREACIONES

E. S. D.

Ref: P1.-**S.C. JOHNSON & SON, INC**.-Expediente No. **00-032.378.-**

1. Me refiero al asunto de la referencia.

2. Por medio del presente, atentamente me permito manifestar que hubo un **cambio** de apoderado para todos los asuntos de la Propiedad Industrial en Bogotá de la sociedad **S.C. JOHNSON & SON, INC**.

3. En consecuencia, atentamente solicito a ese Despacho reconocerme personería en este asunto, de conformidad con la sustitución de poder adjunta, otorgada a favor de la SUSCRITA.

4. Por lo tanto, ruego a usted notificarme de las providencias expedidas dentro de este expediente y notificadas al anterior apoderado, que actualmente se encuentran pendientes de cumplimiento o de respuesta.

5. Solicito a ese Despacho proceder de conformidad.

Atentamente,

ALICIA LLOREDA RICAURTE

T.P. 53215

Código 231

0087

Señor
SUPERINTENDENTE DE INDUSTRIA Y COMERCIO
DIVISION DE NUEVAS CREACIONES
E. S. D.

Ref: P1.- **S.C. JOHNSON & SON, INC.**- Expediente No. **00-032.378.**

Yo, **JOSE ANTONIO LLOREDA**, mayor de edad y vecino de esta ciudad, abogado titulado e inscrito, identificado como aparece al pie de mi firma, actuando en mi carácter de Representante Legal en Bogotá para asuntos relacionados con la propiedad industrial de **S.C. JOHNSON & SON, INC.**, sociedad organizada y existente de conformidad con las leyes del Estado de Wisconsin, Estados Unidos de América, domiciliada en Racine, Wisconsin, Estados Unidos de América, tal y como consta en este expediente, atentamente manifiesto a usted que **SUSTITUYO** el poder a mi conferido a la doctora **ALICIA LLOREDA RICAURTE**, abogada titulada e inscrita, identificada con la cédula de ciudadanía No. 39.690.713 de Usaquén y tarjeta profesional N° 53.215, para que continúe representandola en el expediente de la referencia.

El mencionado apoderado tendrá las mismas facultades a mi conferidas, en especial, renunciar, recibir, sustituir, desistir, presentar recursos, conciliar, transigir, y en fin, para todo lo que se encamine a la correcta defensa de los intereses de la sociedad en cuyo nombre hablo.

Atentamente,

JOSE ANTONIO LLOREDA
T.P. 10784
Código 231

NOTARIA SEXTA DE BOGOTA
RECONOCIMIENTO Y PRESENTACION PERSONAL
Bogotá, D.C. 25 AGO 2004
Ante mi PABLO MENDEZ BARAJAS
NOTARIO SEXTO(E) DEL CIRCULO DE BOGOTA
compareció(eron)
quien(es) exhibió(eron) la(s) C.C.
y manifestó(aron) que reconoce(n) como suyas la firma que aparece(n) en el presente documento y que el contenido de la misma es cierto y que la firma es suya (s) y que el documento fue elaborado en esta diligencia y no imprimir.

JOSE ANTONIO LLOREDA
C.C. No. 17.159.681 de Bogotá

NOTARIA SEXTA
PABLO MENDEZ BARAJAS
Notaria Sexta Encargado

DIVISION DE NUEVAS CREACIONES

RADICACIÓN EXPEDIENTE No. **00-32378**

EL EXTRACTO DE LA PRESENTE SOLICITUD DE **PATENTE DE INVENCION**

FUE PUBLICADO EN LA GACETA DE PROPIEDAD INDUSTRIAL No **526**, DE

FECHA **31** DE **MARZO** DE **2003**, EL TERMINO HABIL SEÑALADO POR LA LEY

EXPIRA EL **01** DE **JULIO** DE **2003**.

NOTA: Dentro del plazo de los seis (6) meses siguientes a partir de la fecha de publicación en la gaceta de Propiedad Industrial, deberá solicitar y cancelar el examen de patentabilidad so pena de que la solicitud caiga en abandono, de acuerdo con lo establecido en el Artículo 44 de la Decisión 486/2000.

SE PRESENTARON OPOSICIONES POR PARTE DE TERCEROS.

SI ____ _____ NO ____ **X** _____

89

~~92~~

375
2007-07-27

SUPERINTENDENCIA DE INDUSTRIA Y COMERCIO
DIVISION DE NUEVAS CREACIONES

2020
Bogotá, D.C., (11 Julio 2007)

Abogada
Alicia Lloreda Ricaurte
(Apoderada)
Solicitante: S.C. JOHNSON & SON. INC.

ASUNTO	Radicación	00-32378
	Trámite	002
	Evento	001
	Actuación	430
	Oficio	000 8915
	Folios 004	

Como resultado del examen de fondo, realizado con fundamento en el artículo 45 de la Decisión 486 de la Comisión de la Comunidad Andina, se le comunica:

1. Documentos estudiados

1.1. Descripción: Folios: 5 a 21

1.2. Reivindicaciones: Folios 22 a 26
1.3. Dibujos: Folios 27 a 28

1.4. Prioridad: Folios: 58 a 73 (Mayo 7 de 1999, US, 09/307,150)

2. Objeto de la invención

- Título de la solicitud: "Estera para distribuir materiales volátiles".

- *Objeto de la invención:*

Reivindicaciones 1 a 11: Una estera para distribuir vapores volátiles cuando se calientan; dicha estera consta de una capa portadora sólida que tiene un material volátil colocado en la misma. Una primera capa de metal asegurada a un lado de la capa portadora; esta capa de metal se calienta por un lado lo cual permite una transmisión de calor a la capa portadora. El material volátil se selecciona del grupo que consiste de insecticidas, repelentes de insectos, controladores del desarrollo de insectos y combinaciones de los mismos. La capa portadora de la estera es un material celulósico; además comprende una capa no metálica. La estera caracterizad porque el material volátil no incluye butòxido de piperonilo.

Reivindicaciones 12 a 15: Un mètodo para controlar insectos caracterizado por que comprende los pasos de: a) proporcionar una estera que tiene una capa portadora, sòlida tomando lugar en la misma un material volátil que incluye un material para el control de insectos b) aplicar calor a la primera capa de metal en una cantidad suficiente para volatilizar el material para el control de insectos..

El problema planteado en esta solicitud es la distribución uniforme de vapores volátiles tales como insecticidas para el control de plagas. Para solucionar este problema técnico la solicitud en estudio proporciona una estera de múltiples capas, las cuales constan de una capa de metal la cual se calienta con el fin de distribuir el vapor volátil de la capa adjunta la cual esta impregnada del material volátil.

Clasificación Internacional de Patentes (IPC.): A01M 1/00.

3. De la solicitud de Patente

3.1. Reivindicaciones *(artículo 30 D 486)*

En la solicitud no es claro si el material volátil que se encuentra en la capa portadora contiene o no butòxido de piperonilo ya que en la reivindicaciòn ya que en la reivindicaciòn 10 se afirma que: " un material para el control de insectos y esta esencialmente libre de butòxido de piperonilo" mientras que en la reivindicación 9 se afirma que la estera se encuentra caracterizada: "porque el material volàtil incluye un material para el control de insectos y tambièn incluye no màs de una relaciòn 1:4 en peso de butòxido de piperonilo al material para el control de insectos". Las dos reivindicaciones mencionadas son dependientes y se encuentran referidas a la reivindicaciòn 1.

En la reivindicaciòn 12 de la solicitud se esta presentando un mètodo para controlar insectos; en los pasos que se presentan para el mètodo no muestran una forma de controlar insectos ya que se encuentran referidos a la obtenciòn de la estera y la forma como funciona dicha estera por medio del calentamiento de la capa de metal para lograr la volatilizaciòn del material volátil.

Las reivindicaciones 13, 14 y 15 que son dependientes de la reivindicaciòn 12 y se encuentran referidas al mètodo para controlar insectos se encuentran mostrando caracterìsticas tècnicas de la estera pero no definen particularidades del mètodo. Por lo tanto, se deberìa definir el mètodo para el control de insectos por medio de la estera y presentar las reivindicaciones adecuadamente para describir el mètodo

Las reivindicaciones anteriormente mencionadas no cumplen con el requisito de claridad de acuerdo al artìculo 30 de la Decisión 486.

4. Determinación del Estado de la Técnica

Considerando que la fecha de presentaciòn de la primera solicitud de patente de la cual se reiivndica prioridad es 7 de Mayo de 1999; se buscaron documentos del estado de la tècnica relacionados , con fecha de publicación anterior a esta.

N°	Documento	Título	Fecha de Publicación*
D1	GB 2166653	Deodorant or pesticidal mats	1986-05-14
D2	JP 63-122603	Vermin-proofing and heat-insulation sheet	1988-05-26

Los documentos mencionados se anexan al expediente.

5. Análisis de patentabilidad (según requisito) (artículo 14 D486)

5.1. Nivel inventivo *(artículo18 D486)*

La anterioridad D1 presenta una estera impregnada con un compuesto desodorante, desinfectante o pesticida; el cual, por medio de un calentamiento elèctrico permite la producción continua de vapores del compuesto. La estera esta compuesta por una capa delgada de un material impermeable al vapor (làmina metàlica) y una capa de un materia aislante el cual puede ser un adhesivo termoplàstico. La estera que contiene el material volátil se encuentra entre las capas mencionadas.

En la anterioridad D2 se presenta un controlador de plagas el cual consta de una làmina de papel la cual se encuentra impregnada con un insecticida y esta dispuesta sobre una làmina delgada metàlica con un adhesivo. Preferiblemente se inserta una capa de lana de vidrio como material aislante entre la capa de metal delgada y la làmina de papel. La superficie de la lámina metálica puede estar recubierta con una capa de resina protestante. En la capa metálica preferiblemente se utiliza aluminio.

Como se puede observar en los documentos mencionados las esteras presentadas contienen una làmina en la cual esta impregnado el compuesto volátil, a dicha lámina se le adhiere un làmina metàlica en la cual va a ocurrir el calentamiento y además cuenta con una capa de material aislante. La adherencia entre la làmina metàlica y la làmina en la cual se impregna el material insecticida volátil se produce por medio de la adiciòn de un adhesivo termoplástico.

De otra parte, la estera contemplada en la invención contiene una lámina metálica, a la cual se le pega la lámina de material poroso o capa portadora que contiene el compuesto volátil, como una forma preferida de la invención, a la última lámina se le adhiere otra lámina no metálica. Por lo tanto las esteras para controlar plagas presentadas en las anterioridades y en la solicitud conservan los mismos elementos y disposición de los mismos para conformar la estera ya

que contienen una lámina metálica difusora del calor así como una capa portadora la cual se encuentra impregnada con el material a volatilizar y adyacente a esta se encuentra la lámina no metálica que podría corresponder al material aislante descrito en las anterioridades. Tanto en las anterioridades como en la solicitud la invención se utiliza para controlar plagas. De esta manera la estera presentada en la solicitud es posible derivarla de de los documentos enunciados.

Debido a lo anterior la solicitud no cumple con lo establecido en el artìculo 18 de la Decisión 486.

6. Conclusión:

Los requisitos de patentabilidad de la presente solicitud se encuentran afectados así:

N°	Documento N°	Reivindicaciones Afectadas	Requisito que Afecta
D1	GB 2166653	1 a 11	NIVEL INVENTIVO
D2	JP 63-122603	1 a 11	NIVEL INVENTIVO

En cumplimiento del artículo 45 de la Decisión 486 de la Comisión de la Comunidad Andina, se le indica que debe dar respuesta dentro del término de sesenta días contados a partir de la fecha de notificación de la presente comunicación. En caso de no dar respuesta al presente requerimiento, o si a pesar de la respuesta subsistieran los impedimentos para la concesión, se denegará la patente.

Notifíquese el presente oficio conforme a lo dispuesto en el artículo 8 de la resolución reglamentaria No. 00210 del 15 de enero de 2001, advirtiendo que contra él no procede recurso alguno en la vía gubernativa.

ALIX CARMENZA CESPEDES DE VERGEL
Jefe de División de Nuevas Creaciones.

El anterior requerimiento fue notificado por fijación en lista, de fecha 27 JUL. 2007

CONCEPTO TECNICO No. 1018	**EXAMINADOR TECNICO** Código No. 202064

(12) UK Patent Application (19) GB (11) 2 166 653 A

(43) Application published 14 May 1986

(21) Application No 8517912

(22) Date of filing 16 Jul 1985

(30) Priority data

(31) 80944 (32) 14 Nov 1984 (33) GR

(71) Applicant
Edward Bratitch,
47 Kokkinara Str, 145 63 Kifissia, Athens, Greece

(72) Inventor
Edward Bratitch

(74) Agent and/or address for service
Brookes & Martin, High Holborn House, 52/54 High Holborn, London, WC1V 6SE

(51) INT CL[4]
A61L 9/02

(52) Domestic classification
A5G V

(56) Documents cited

GB A	2057884	GB	0655298
GB	1516845	GB	0655287
GB	1236343	GB	0620699

(58) Field of search
A5G
Selected US specifications from IPC sub-class A61L

(54) Deodorant or pesticidal mats

(57) Mat 1, impregnated with deodorant, disinfectant or pesticide, and intended for use in electrically-heated devices producing continuously vapour of deodorant, insecticide etc., is provided with a layer 2 of thin vapour-impermeable material (e.g. metal foil) on its upper surface and/or a layer 3 of heat-insulating material on its lower surface, so as to modify the rate at which active material is vaporized from the heated mat. The upper layer 2 may be perforated.

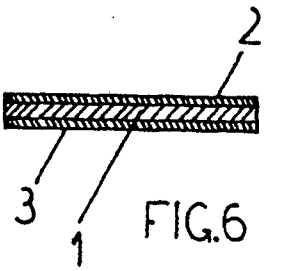

FIG.6

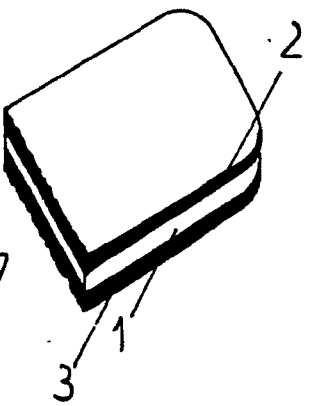

FIG.7

GB 2 166 653 A

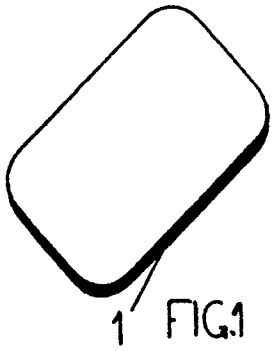

FIG.1

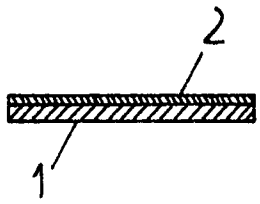

FIG.2

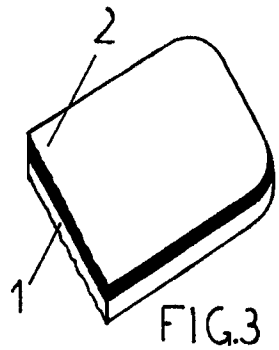

FIG.3

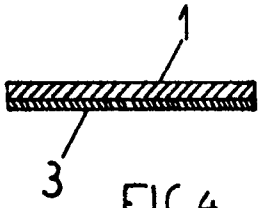

FIG.4

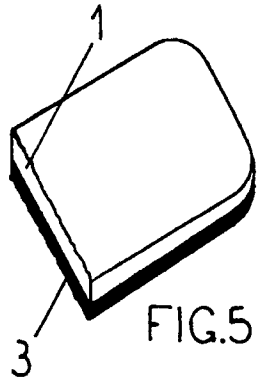

FIG.5

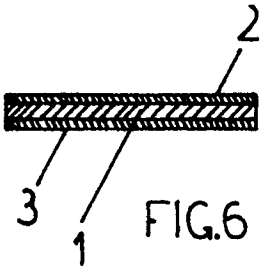

FIG.6

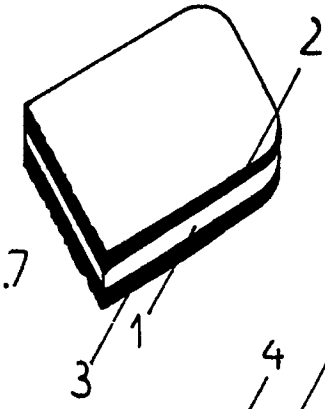

FIG.7

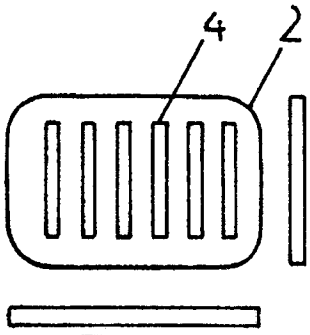

FIG.8

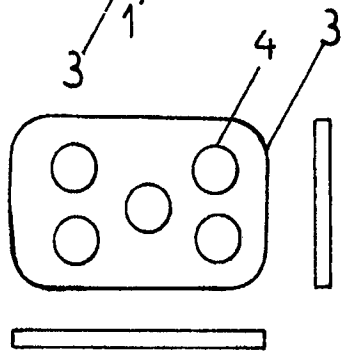

FIG.9

95

SPECIFICATION

Deodorant or Pesticidal Mats

Method for the qualitative and quantitative control of the volatilization—either by heating or without—of aromatic, deodorant, insecticide, insect-repellent, mothproofing, disinfectant, pesticide and other substances imbibed in inert matter, and application of the method in the preparation of suitable mats for practical uses.

Historical Background of the Invention

It is widely known that problems of deodorization, disinfection, insect-control, aromatization, etc. exist from time to time in different areas. It is also well known that the research Laboratories of various industries have attempted to solve these problems by using several processes. The result of these researches was the appearance of a new technique that gained worldwide appreciation, the aerosol products or sprays. Their operation is based on the instantaneous expelling and atomization of active matter in fine liquid particles, through solvents and pressurized propellent gases, in the atmosphere. It must be noted that the active life period of Aerosol products is limited.

Our invention, however, relates to, but differentiates from the technique of another recent technology with a very similar aim to the Aerosol products, yet with another objective, and in particular the manufacturing of mats made of different permeable and porous, inert materials (i.e. paper, carton plastic etc.) imbibed with aromatic deodorant, insecticide, insect-repellent, mothproofing, disinfectant, pesticide and other substances. When the aforementioned mats are placed, or inserted into electrically heated small appliances, they volatilize, within a given relatively short period of time, the contained active matter in the form of a very fine invisible mist in the atmosphere. The main problem arising today in the use of mats manufactured in this way is that the existing ambient conditions, the range of temperature of the various electrical small appliances, the kind of the contained active matter etc., affect directly the volatilization enforced through heating. The active matter is on the hand a mixture of several raw materials with various volatility rates, this resulting in a non-isochronous and non-uniform volatilization rate of these materials, especially at the early stages of operation of the mats.

The result of this initially intense partial volatilization of the more volatile ingredients is:

A.—The qualitative differentiation of the active matter.

B.—The quantitatively, anisomeric, and non-uniform distribution of the active matter in the course of time.

This irregular volatilization process eventually leads to a completely unproper operation of the product.

Another way to control the volatilization of the active matter contained in the above mats, would be the use of special electrical small appliances for each particular case i.e. electrical appliances operating at 70°C, could be used for aromatic deodorants and the common commercial electrical appliances operating at 150°C, could be used for insecticides. It is, nevertheless, obvious that in this lower temperature range, only the highly volatile ingredients contained in the active matter would be volatilized, and all the rest would remain unexploited, the results being the following:

a) The most certain inefficiency in the performance of the mat.

b) The unavoidable mistakes, on the user's part in the choice of the appropriate appliance when using two or more kinds of products.

The volatilization of the active matter from mats or plates, can take place without the use of electrically heated small appliances, but by employing some other natural or artificial process (i.e. high ambient temperature, ventilation etc.), thereby creating conditions of enforced volatilization of their contents. However, the problem of non-uniform, non-isochronous and anisomeric escape of the imbibed various active matters will arise, for the same reasons as in the previous case.

The object of this invention is to avoid the aforementioned disadvantages and problems of the already exsisting routine.

Thus our invention offers a new and more efficient method for the production of mats imbibed with aromatic, deodorant, insecticide, insect-repellent, mothproofing, disinfectant, pesticide, and other substances which provide a more economic performance, either by employing the electrically heated small appliances, or without them; in the latter case by employing some other natural or artificial process of enforced volatilization. The advantage of this method is the uniform, isochronous, isomeric and moreover the homogeneous and longer operation life of the product, as well as the complete exhaustion of the contained substances, the result being a perfect and economic performance. The following analytical description highlights the manner in which the object of this invention is achieved.

Brief Description of the Drawings

Our reference to the attached drawings will help with the understanding of the main points of the invention and will shows its application in illustrative cases.

Figure 1 shows in perspective an outline of a common mat imbibed with the desired active matter which is released through heating in an electrically heated small appliance.

Figure 2 shows a cross section of a mat where according to a preferred embodiment of the invention, a thin metal foil has been placed on its upper surface, for the control of the volatilization rate.

Figure 3 shows in perspective a cross section of a mat with a thin foil placed on its upper surface.

Figure 4 shows a cross section of a mat where, according to another preferred embodiment of the

99
96

invention, a foil of heat insulating material has been placed on its lower surface.

Figure 5 shows in perspective a cross section of a mat with a foil of heat insulating material on its lower surface.

Figure 6 shows a cross section of a mat where, according to another preferred embodiment of the invention, its upper surface has been coated with a thin metal foil and its lower surface with a heat insulating sheet.

Figure 7 shows in perspective a cross section of the mat being coated on its upper surface with a thin metal foil and on its lower surface with a heat insulating sheet.

Figure 8 shows a plan, front and side views of a thin metal foil used for the coating of the upper surface of a mat.

According to a preferred embodiment of the invention its surface appears perforated in a pattern of a series of symmetrical apertures.

Figure 9 shows a plan, front and side views of the heat insulating sheet used for the coating of the lower surface of the mat. According to a preferred embodiment of the invention, its surface appears perforated in a pattern of a series of symmetrical apertures.

Analytical Description of the Invention

We will describe certain illustrative and preferred embodiments of the invention by way of reference, to the attached drawings. As it has already been mentioned, in the introduction of this specification a common mat (figure 1) has certain disadvantages when in common usage it is heated mounted on an electrical small appliance. These disadvantages relate to the operation life, the intensity, and the non-uniform, non-isochronous and anisomeric qualitatively and quantitatively volatilization of its active matter in the surroundings, this resulting in an irregular, uncontrolled and disagreeable diffusion and to an uneconomical effectiveness of the mat's properties.

This invention provides an absolutely foreseeable and steady, qualitatively and quantitatively process of volatilization, for example of the intensity, if it is an aroma, or of the other active matter in the surroundings as well as the complete exhaustion of the product in its prescribed operation life.

According to a preferred embodiment of the invention (figure 2, 3) this is achieved by coating the upper surface of mat 1 with a thin metal foil 2, or by any other non-porous or impermeable material ready made or apt to polymerization or hardening etc., consisting of one or more ingredients, creating a new impermeable surface like metal on the upper surface of the mat. This coating is made either by adhesion of the metal foil 2 etc. on the body of the mat 1, made of inert porous matter, or by insertion of a thermoplastic adhesive foil between the two surfaces (i.e. thin foil of polyethylene, etc.) or by means of other adhesive material of any kind and form.

A result similar to the usage of the metal foil 2 can also be obtained when using any simple coating with a substance that is apt to hardening or polymerizing, consequently becoming impermeable and impervious even after the volatilization of the active matter of the mat, as well as by the use of any other method to render its upper surface impervious.

Thus the mat remains permeable to the vapours of the volatilizing active matter only through the remaining exposed surface which is not coated with the impermeable and impervious coating, thereby substantially reduction the high active matter escape rates and its qualitative differentiations.

According to another preferred embodiment of the invention (figures 4, 5) its object is achieved by coating the lower surface of mat 1 with a foil of heat insulating material 3 (i.e. cork, asbestos etc.) which prevents its direct contact with the plate of the common electrically heated small appliance, the operating temperature of which lies in the range of 140—150°C.

In this way the mat 1 is less affected by the relatively high temperature of the plate of the electrically heated small appliance. This results to the volatilization of the active matter being effected with a less enforced process and at a slower rate. This means that the volatilization takes place in a much more, qualitatively and quantitatively controlled manner than that of mat 1, because the temperature lies in the lower range of 75—95°C. Thus the disadvantage of the creation of a supersaturated and disagreeable atmosphere, due to the fast diffusion of the overheated active matter at the early performance stage is avoided. The reduction of the volatilization rate, the reduction of mat effectiveness due to the remaining unexploited active matter in the mat, and the qualitative differentiation during the course of operation, as it is to be explained below, are also avoided. When the mat 1 is used, with the heat insulating coating 3 on its lower surface, on the common electrically heated small appliance we have a low rate of volatilization, which is homogeneous, due to the lower temperature of the imbibed active matter. In case, following the first few hours of operation, the mat is turned upside down, on the electrically heated small appliance the following development is observed: a substantially reduced quantity of active matter still remains in the mat despite of its prior usage. After turning the mat upside down the free surface of the heat insulating material facing downwards, now faces upwards. Instead the uncoated surface of the mat that faced upwards now is in direct contact with the high temperature heat plate of the electrically heated small appliance. After being placed on its new position the mat performs in a similar way as the mat coated with the perforated metal foil, since the heated material is porous.

A result of this contrivance is the reduction of the volatilization rates of the active matter, in the second phase, its exhaustion in an isomeric and isotropic manner, thereby avoiding any inconvenience caused by the high temperature of the appliance (140—160°C).

According to another preferred embodiment of the invention (figures 6, 7) its object is achieved by coating both surfaces of the mat 1, the upper with a

thin metal foil 2 and the lower with a heat insulating material.

It must be noted that the coating either of the mat's 1 upper surface with a thin metal foil 2 or of its lower surface with a heat insulating material 3 or of both surfaces in the same time can be total or partial. The coating is considered as total when the whole upper and/or lower surface are coated throughout with an added compact material. The coating is considered partial when on the above compact surfaces there are symmetrical apertures or perforations 4 (figures 8, 9) which can exist either independently or simultaneously. Consequently this results, in the first place, to the active matter contained in the mats, finding more escaping routes upward and/or downwards other than those provided without such apertures or perforations, and in the second place to the reduction of the heat insulating shield provided by the heat insulating material on the lower surface of the mat. Thus depending on the conditions of each particular case (active matter, volatility, temperature level of the heating plate of the electrical small appliance etc.) the qualitative and quantitative volatilization of the active matter is achieved in an isomeric, uniform and isochronous manner this being the object of this invention. It must also be noted that the apertures, perforations or slots 4 provided on the mat upper or lower coated surfaces 2 and 3, respectively can be of any desirable shape and size in order to obtain the required ideal volatilization rate of the mat's active matter in each particular case. It must also be pointed out, that the manufacturing of the mats 1 with upper and lower impermeable and heat insulating coatings respectively, is not restricted, only to those having the form and shape currently used in electrically heated small appliances. The same aforementioned methods can also be successfully used with other smaller, larger, or of any form shape and size mats that give off in the surroundings their embodied active matter, even without using electrically heated small appliances. Instead of using these appliances, various natural or artificial methods can be applied in order to create special or more intense volatilization rates than those anticipated by the normally prevailing ambient conditions.

A few indicative cases can be mentioned: a) natural or conveyed cold or hot stream of air. b) natural or technically increased ambient temperature. c) incidental or due to various reasons, either events or even artificially provoked movement continuous or temporary, around the balance center of the imbibed mat. Finally it must be noted that the aforementioned description was related to certain illustrative embodiments of the invention which is not restricted only to them.

In view of the above, whatever change or modification relating to the shape, dimensions, size, form, the ingredients, and the manufacturing method of the mat, the method applied in each case to provide control of volatilization, as long as it does not constitute a new inventive step and does not contribute to the technical development of the state of the art, is considered to be included in the scope and the aims of this invention.

CLAIMS

1. Method of manufacture of mats with a qualitatively and quantitatively control volatilization of aromatic, deodorant, insecticide, insect-repellent, mothproofing, disinfectant, pesticide and other substances imbibed in said mats, where the said substances volatilize when the said mats are placed or inserted in small appliances electrically heated, or when without the said small electrically heated appliances an enforced volatilization of the said substances is obtained by motivating other natural, artificial, or various other processes, where said enforced volatilization is effected in a uniform, isochronous and isomeric manner up to the complete exhaustion of the contained material, where the said qualitatively and quantitatively controlled volatilization is achieved by coating the upper or lower surface of the said mat, i.e. the said upper surface with a thin foil of impermeable and impervious material, the said lower surface with the foil of heat insulating material or by coating simultaneous the said upper surface with the said thin foil of impermeable and impervious material and the said lower surface with the said heat insulating material.

2. Method of manufacture of mats with a qualitatively and quantitatively controlled volatilization of aromatic, deodorant, insecticide, insect-repellent, mothproofing, disinfectant, pesticide and other substances imbibed in said mats, according to claim 1, characterized by the fact that the coating with impermeable and impervious material of the upper surface of the said mat is a thin metal foil or another compact ready made or obtained through a suitable process or treatment material.

3. Method of manufacture of mats with a qualitatively and quantitatively controlled volatilization of aromatic, deodorant, insecticide, insect-repellent, mothproofing, disinfectant, pesticide and other substances imbibed in said mats, according to claim 1, characterized by the fact that the coating with impermeable and impervious material of the said upper surface of the said mat is a thin foil and the coating of the said lower surface is a foil of heat insulating material where the said upper and/or lower coating is total when said upper and/or lower surfaces are completely coated.

4. Method of manufacture of mats with a qualitatively and quantitatively controlled volatilization of aromatic, deodorant, insecticide, insect-repellent, mothproofing, disinfectant, pesticide and other substances imbibed in said mats according to claim 1, characterized by the fact that the coating with impermeable and impervious material of the said upper surface of the said mat is a thin foil and/or the coating of the said lower surface is a foil of heat insulating material, where the said upper and/or lower coating is partial when apertures, perforations or slots are created, on the said coating, in order, on the one hand to increase the "Escaping Routes" of the active matter

98

contained in the mat 1 via the thereby created exposed surface, and on the other hand to reduce the heat insulating shield of the said lower surface of the said mat, where the said apertures, perforations, slots are of any desirable and suitable form and extent in order to obtain the at times qualitatively and quantitatively desirable rate of volatilization of the active matter imbibed in the said mat in each particular case.

5. Mat manufactured according to any of the above claims 1—4 characterized by the fact that the volatilization of the aromatic, deodorant, insecticide, insect-repellent, mothproofing, disinfectant, pesticide and other substances imbibed therein, is implemented in a qualitatively and quantitatively controlled uniform, isochronous and isomeric manner up to complete exhaustion of the said imbibed active matter, where the said mat is of a suitable form and dimensions, so that it can be placed or inserted in a small electrically heated appliance aiming to provide volatilization of the said substances.

6. Mat manufactured according to any of the aforementioned claims 1—4 characterized by the fact that the volatilization of aromatic, deodorant, insecticide, insect-repellent, mothproofing, disinfectant, pesticide and other substances imbibed therein, is implemented in a qualitatively and quantitatively controlled uniform, isochronous, isomeric manner up to complete exhaustion of the imbibed active matter, where the said mat has any form and dimensions suitable for providing escaping of the said imbibed substances in the atmosphere without the use of an electrically heated appliance but by employing other natural and artificial processes which can cause an enforced rate of volatilization.

7. Method of manufacture of mats with a qualitatively and quantitatively controlled volatilization, where said mats are imbibed with aromatic, deodorant, insecticide, insect-repellent, mothproofing, disinfectant, pesticide and other substances, where said mats are heated or not heated and mats manufactured with this method according to any of the above claims 1—6 as outlined in the attached specifications and as illustrated in the accompanying drawings.

Printed for Her Majesty's Stationery Office by Courier Press, Leamington Spa. 5/1986. Demand No. 8817356.
Published by the Patent Office, 25 Southampton Buildings, London, WC2A 1AY, from which copies may be obtained.

D2.
101.
99

PATENT ABSTRACTS OF JAPAN

(11)Publication number : **63-122603**
(43)Date of publication of application : **26.05.1988**

(51)Int.Cl. A01N 25/34

(21)Application number : **61-268372**
(22)Date of filing : **11.11.1986**

(71)Applicant : **OIKE IND CO LTD**
(72)Inventor : **KOYAMATSU OSAMU**

(54) VERMIN-PROOFING AND HEAT-INSULATION SHEET

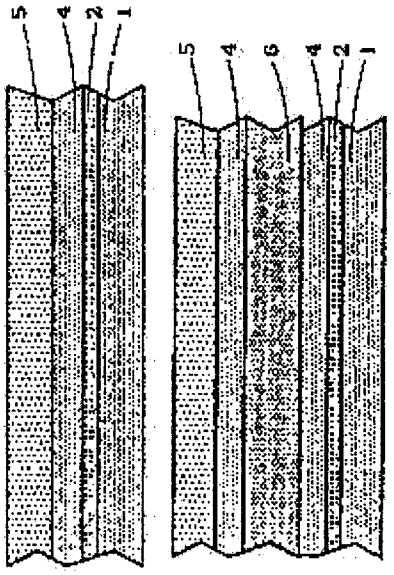

(57)Abstract:
PURPOSE: To obtain a vermin-proofing and heat-insulation sheet, by forming a thin layer of evaporated metal on a base film, laminating a paper sheet coated or impregnated with an insecticide on the metallized layer, optionally inserting a glass wool layer between the metal layer and the paper and applying a protecting resin layer on the surface of the metal layer.
CONSTITUTION: A thin layer 2 of evaporated metal is formed on a base film 1. A vermin-proofing sheet 5 at least composed of a paper sheet coated or impregnated with an insecticide is laminated to the thin metal layer 2 via an adhesive 4. The vermin-proofing and heat-insulation sheet produced by the above process has extremely excellent durability of the insecticidal effect and the heat-insulation property under the floor. Preferably, a glass wool layer 6 is inserted between the evaporated metal thin layer 2 and the vermin-proofing sheet (paper) 5. The surface of the evaporated metal thin layer 2 may be covered with a protecting resin layer. The thickness of the evaporated metal layer is preferably 30W100nm and the metal is preferably Al.

CLAIMS

1. A mat for dispensing volatile vapors when heated, the mat comprising:
   a. a solid carrier layer having a volatile material placed therein, the carrier layer being constructed and arranged so as to emit the volatile material when heated; and
   b. a first metal layer secured to a side of the carrier layer, whereby, upon heating of a side of the metal layer opposite the carrier layer, the metal layer will distribute heat along itself and transmit heat to the carrier layer.

2. The mat of claim 1, wherein the volatile material is selected from the group consisting of insecticides, insect repellents, insect developmental controllers, and combinations thereof.

3. The mat of claim 1, wherein the carrier layer is a cellulosic material.

4. The mat of claim l, further comprising:
   a. a non-metallic layer secured to a side of the first metal layer opposite the carrier layer; and
   b. a second metal layer secured to a side of the non-metallic layer opposite the first metal layer.

5. The mat of claim 1, further comprising a non-metallic layer secured to a side of the first metal layer opposite the carrier layer.

6. The mat of claim 5, wherein the carrier layer has a thickness which is essentially the same as the first metal layer.

7. The mat of claim 5, wherein the non-metallic layer has leg portions extending therefrom and the mat further comprises a second metal layer adhesively secured to the legs opposite the first metal layer.

8. The mat of claim 7, wherein a cavity is provided between a portion of the non-metallic layer and the second metal layer.

ABSTRACT OF THE DISCLOSURE

Disclosed herein are mats for dispensing volatile vapors such as insecticides. The mats are multi-layered. One layer is a carrier layer impregnated with the volatile. It is secured to at least one metal layer. The metal layer spreads the heat from a heater, thereby minimizing hot spots. In other embodiments additional layers are provided to provide a further heat distribution or temperature step down. An air gap can be provided between two of the layers.

~~88~~
66

United States Patent & Trademark Office

Office of Initial Patent Examination – Scanning Division

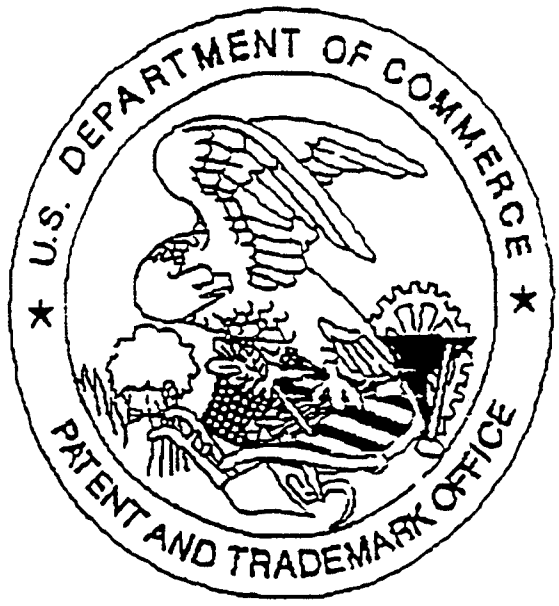

Application deficiencies were found during scanning:

☐ Page(s)_____ of _____ were not present for scanning.
(Document title)

☐ Page(s)_____ of _____ were not present for scanning.
(Document title)

There are only 8 pages of Specification

☐ Scanned copy is best available.

EXPRESS MAIL LABEL NO. EJ484161059US

PTO/SB/01 (6-95)
Approved for use through 9/30/98. OMB 0651-0032
Patent and Trademark Office: U.S. DEPARTMENT OF COMMERCE

Please type a plus sign (+) inside this box [+]

0010/PTO
Rev. 6/95

U.S. Department of Commerce
Patent and Trademark Office

DECLARATION FOR UTILITY OR DESIGN PATENT APPLICATION

[X] Declaration Submitted with Initial Filing OR [ ] Declaration Submitted after Initial Filing

Attorney Docket Number	J-2830
First Named Inventor	Stanley J. Flashinski
COMPLETE IF KNOWN	
Application Number	
Filing Date	
Group Art Unit	
Examiner Name	

As a below named inventor, I hereby declare that:

My residence, post office address and citizenship are as stated below next to my name.

I believe that I am the original, first and sole inventor (if only one name is listed below) or an original, first and joint inventor (if plural names are listed below) of the subject matter which is claimed and for which a patent is sought on the invention entitled:

MAT FOR DISPENSING VOLATILE MATERIALS

(Title of the Invention)

the specification of which

[X] is attached hereto

OR

[ ] was filed on (MM/DD/YYYY) [ ] as United States Application Number or PCT International Application Number [ ] and was amended on (MM/DD/YYYY) [ ] (if applicable).

I hereby state that I have reviewed and understand the contents of the above identified specification, including the claims, as amended by any amendment referred to above

I acknowledge the duty to disclose information which is material to patentability as defined in Title 37, Code of Federal Regulations §1.56.

I hereby claim foreign priority benefits under Title 35, United States Code §119(a)-(d) or §365(b) of any foreign application(s) for patent or inventor's certificate or §365(a) of any PCT international application which designated at least one country other than the United States of America, listed below and have also identified below, by checking the box, any foreign application for patent or inventor's certificate, or any PCT international application having a filing date before that of the application on which priority is claimed.

Prior Foreign Application Number(s)	Country	Foreign Filing Date (MM/DD/YYYY)	Priority Not Claimed	Certified Copy Attached? YES	NO
N/A			[ ]	[ ]	[ ]
			[ ]	[ ]	[ ]
			[ ]	[ ]	[ ]
			[ ]	[ ]	[ ]
			[ ]	[ ]	[ ]
			[ ]	[ ]	[ ]

[ ] Additional foreign applications numbers are listed on a supplemental priority sheet attached hereto:

I hereby claim the benefit under Title 35, United States Code §119(e) of any United States provisional application(s) listed below.

Application Number(s)	Filing Date (MM/DD/YYYY)	
N/A		[ ] Additional provisional application numbers are listed on a supplemental priority sheet attached hereto.

Burden Hour Statement: This form is estimated to take .4 hours to complete. Time will vary depending upon the needs of the individual case. Any comments on the amount of time you are required to complete this form should be sent to the Chief Information Officer, Patent and Trademark Office, Washington, DC 20231. DO NOT SEND FEES OR COMPLETED FORMS TO THIS ADDRESS. SEND TO: Assistant Commissioner for Patents, Washington, DC 20231. MKE\4358735

70
68

Please type a plus sign (+) inside this box [+]

DECLARATION

I hereby claim benefit under Title 35, United States Code §120 of any United States application(s), or §365(C) of any PCT international application designating the United States of America, listed below and, insofar as the subject matter of each of the claims of this application is not disclosed in the prior United States application or PCT international application in the manner provided in the first paragraph of Title 35, United States Code §112, I acknowledge the duty to disclose information which is material to patentability as defined in Title 37, Code of Federal Regulations §1.56 which became available between the filing date of the prior application and the national or PCT international filing date of this application.

U.S. Parent Application Number	PCT Parent Number	Parent Filing Date (MM/DD/YYYY)	Parent Patent Number *(if applicable)*
N/A			

[ ] Additional U.S. or PCT international application numbers are listed on a supplemental priority sheet attached hereto

As a named inventor, I hereby appoint the following attorney(s) and/or agent(s) to prosecute this application and all continuation and divisional applications based thereon, and to transact all business in the Patent and Trademark Office connected therewith:

[ ] Firm Name [ ] Customer Number or label [ ]

OR

[X] List attorney(s) and/or agent(s) name and registration number below

Name	Registration Number	Name	Registration Number
David J. Houser	29,172	Carl R. Schwartz	29,437

[ ] Additional attorney(s) and/or agents named on a supplemental priority sheet attached hereto

Please direct all [ ] Customer Number or label [ ] OR [X] Fill in correspondence address below

Name	David J. Houser				
Address	S.C. Johnson & son, Inc.				
Address	1525 Howe Street				
City	Racine	State	WI	Zip	53403
Country	USA	Telephone	(414) 260-2000	Fax	(414) 260-4253

I hereby declare that all statements made herein of my own knowledge are true and that all statements made on information and belief are believed to be true; and further that these statements were made with the knowledge that willful false statements and the like so made are punishable by fine or imprisonment, or both, under Section 1001 of Title 18 of the United States Code and that such willful false statements may jeopardize the validity of the application or any patent issuing thereon.

Name of Sole or First Inventor [ ] A petition has been filed for this unsigned inventor

Given Name	Stanley	Middle Initial	J.	Family Name	Flashinski	Suffix	---
Inventor's Signature						Date	
Residence:	Racine	State	WI	Country	USA	Citizenship	USA
Post Office	5508 River Hills Road						
Post Office							
City	Racine	State	WI	Zip	53402	Country	USA
Applicant Authority							

[ ] [X] Additional inventors are being named on supplemental sheet(s) attached hereto

Please type a plus sign (+) inside this box [+]

Please type a plus sign (+) inside this box [+]

DECLARATION	ADDITIONAL INVENTOR(S) Supplemental Sheet

Name of Additional Joint Inventor, if any: [ ] A petition has been filed for this unsigned inventor

Given Name	Nancy	Middle Initial	J.	Family Name	Vnuk	Suffix e.g. Jr.	
Inventor's Signature						Date	
Residence:	South Milwaukee	State	WI	Country	U.S.A.	Citizenship	U.S.A.
Post Office	1512 Walnut Street						
Post Office							
City	South Milwaukee	State	WI	Zip	53172	Country	U.S.A.
Applicant Authority							

Name of Additional Joint Inventor, if any: [ ] A petition has been filed for this unsigned inventor

Given Name	Lori	Middle Initial	J.	Family Name	Bootz	Suffix e.g. Jr.	
Inventor's Signatue						Date	
Residence:	West Allis	State	WI	Count	U.S.A.	Citizens	U.S.A.
Post Office	9006 W. Dakota Street						
Post Office							
City	West Allis	State	WI	Zip	53227	Country	U.S.A.
Applicant Authority							

Name of Additional Joint Inventor, if any: [ ] A petition has been filed for this unsigned inventor

Given Name		Middle Initial		Family Name		Suffix e.g. Jr.	
Inventor's Signature						Date	
Residence:		State		Country		Citizenship	
Post Office							
Post Office							
City		State		Zip		Country	
Applicant Authority							

Name of Additional Joint Inventor, if any: [ ] A petition has been filed for this unsigned inventor

Given Name		Middle Initial		Family Name		Suffix e.g. Jr.	
Inventor's Signature						Date	
Residence		State		Country		Citizenship	
Post Office							
Post Office							
City		State		Zip		Country	
Applicant Authority							

[ ] Additional inventors are being named on supplemental sheet(s) attached hereto

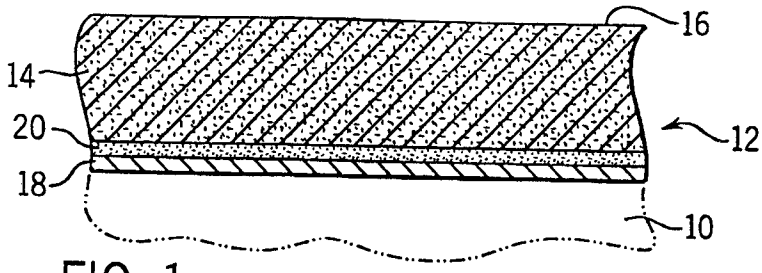

FIG. 1

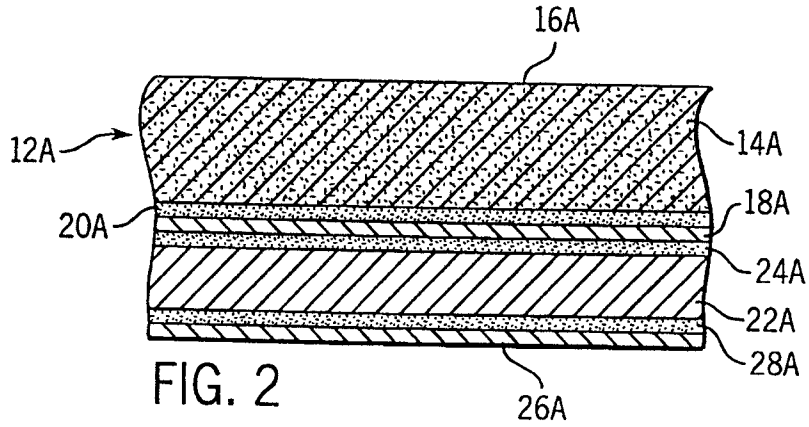

FIG. 2

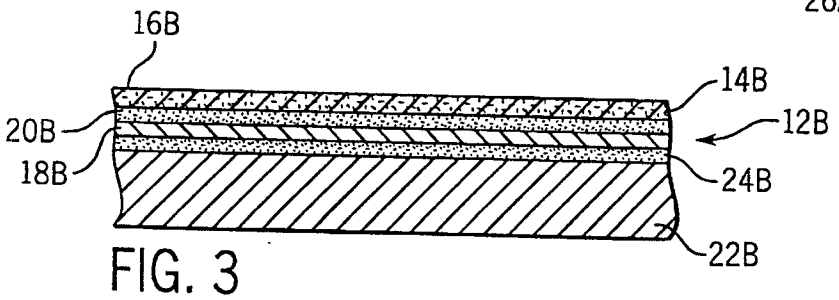

FIG. 3

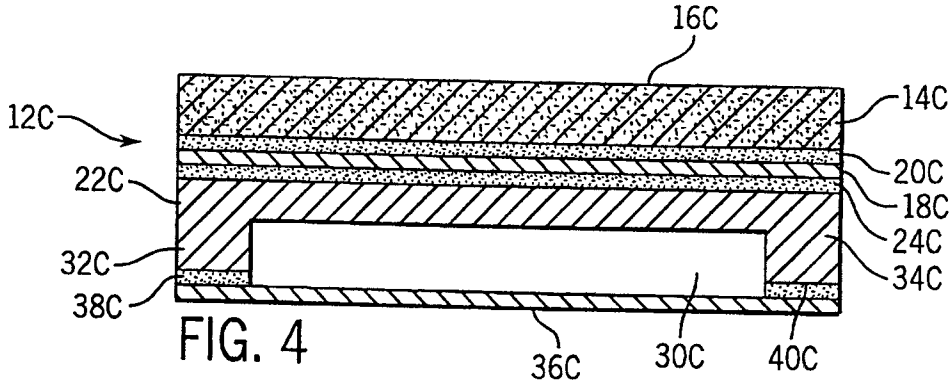

FIG. 4

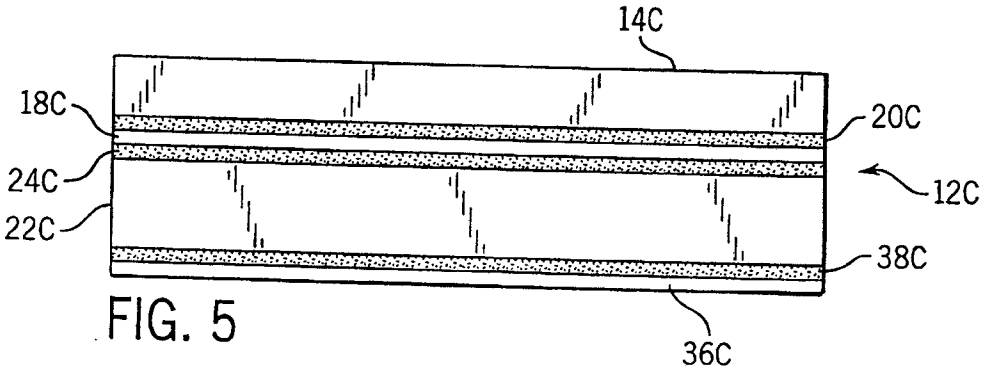

FIG. 5

Industria y Comercio
SUPERINTENDENCIA
República de Colombia
Ministerio de Comercio, Industria y Turismo

INVENTARIO DOCUMENTAL

Royal Technologies S.A.
Enterprise Content Management & BPM

RADICACIÓN	TIPO UNIDAD DE CONSERVACIÓN	FOLIOS	CONTENIDO						
			CR	FB	C	F	DB	Otros Documentos	Cual
0032378	PAPEL	99					✓	3	Duplicado

Convenciones: CR: Copias de Resoluciones FB: Formato Blanco C: Copias F: Fotocopias DB: Documento en Blanco

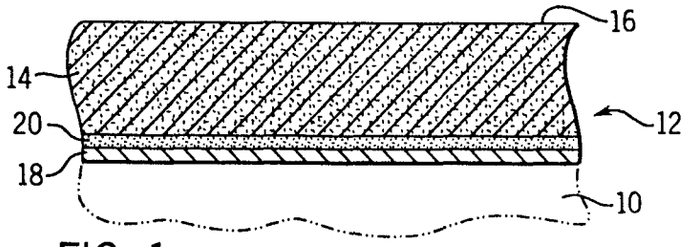

FIG. 1

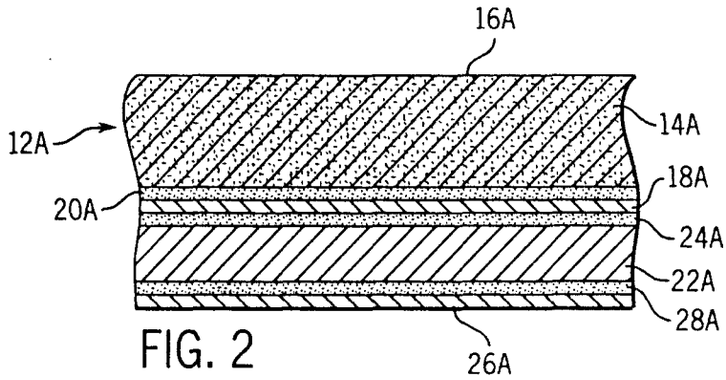

FIG. 2

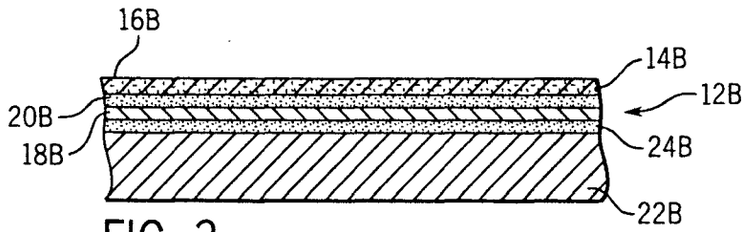

FIG. 3

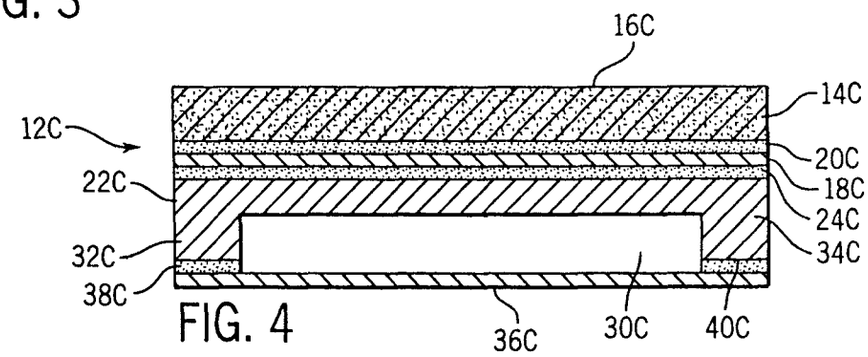

FIG. 4

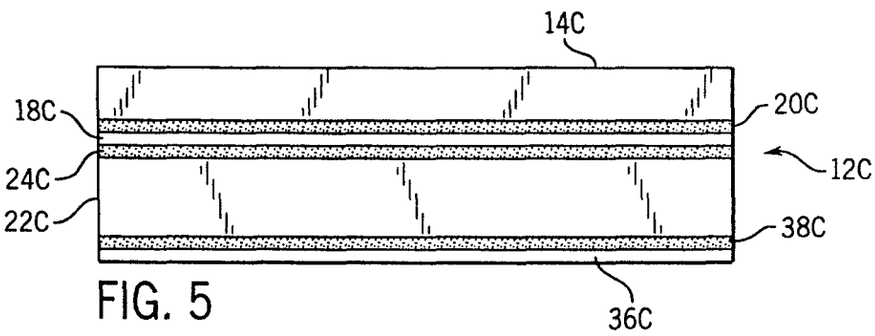

FIG. 5