24/26

ESCOBAR - URIBE ASOCIADOS

A B O G A D O S

Carrera 11A No. 94-76 Of 305 P O Box 94948, Bogotá, Colombia, S.A.
Tels. (571) 6162051 6162061 6161859 6161869
Fax: (571) 6161889

2421/P

SUPERINTENDENCIA DE INDUSTRIA Y COMERCIO
DIVISIÓN DE NUEVAS CREACIONES
E S D

SUPERINDUSTRIA Y COMERCIO
Radicacion : 00098470 00000001 Folios 24
Fecha (AAA) 2001-03-02 16:01:36
Tramite : 002 PATENTES D 1 REGISTRO/ 329 COMPLEMEI
Dependencia: 2020 DIVISION DE NUEVAS CREACIONES

Re Expediente No 00 098 470
Solicitud de Patente en nombre de
Ethicon, Inc

Yo, JIMENA ESCOBAR URIBE, identificada como aparece al pie de mi firma, domiciliada en Bogotá, en la carrera 11 A No 94-76 Of 305, obrando como apoderada de la sociedad Ethicon, Inc , solicitante de la patente de la referencia anexo al presente memorial los siguientes documentos

Copia certificada de la solicitud de Patente Número 09/476,424 presentada en los Estados Unidos de América el día 30 de diciembre de 1999, con la debida traducción de lo pertinente, incluyendo el capítulo reivindicatorio

A este mismo respecto, debe tenerse en cuenta que en las primera página de la copia en mención la Oficina de Patentes correspondiente certificó la fecha de presentación de esa solicitud, cumpliéndose de esta forma todos y cada uno de los requisitos establecidos en el inciso segundo del artículo 10 de la decisión 486 de la Comisión de la Comunidad Andina

Señor Superintendente,

JIMENA ESCOBAR URIBE
C C 39 779 452 de usaquén
T P 68228
Cód 5376

ESTADOS UNIDOS DE AMERICA
A TODOS AQUELLOS A QUIENES EL PRESENTE LLEGUE

DEPARTAMENTO DE COMERCIO DE LOS ESTADOS UNIDOS
Oficina de Patentes y Marcas de los Estados Unidos

Febrero 6, 2001

La presente es para certificar que el anexo es una copia fiel de los registros de la Oficina de Patentes y Marcas de los Estados Unidos, de los documentos de la solicitud de patente identificada más adelante, que cumplieron con los requerimientos para concederse una fecha de presentación de acuerdo con 35 USC 111

Número de Solicitud 09/476,424

Fecha de Presentación Diciembre 30, 1999

Por la autoridad del
Comisionado de Patentes y Marca

(fdo) P SWAIN
Oficial Certificador
Sello oficial de la Oficina de Patentes y Marcas de los Estados Unidos de América

REIVINDICACIONES

1 - Un aparato que comprende un alojamiento que tiene un extremo proximal y extremo distal, el alojamiento estando montado deslizablemente sobre una flecha de aguja por abajo de una punta distal de aguja, y una presilla que tiene un puente, un extremo proximal acoplado al puente y un extremo distal acoplado al puente, la presilla estando dispuesta dentro del alojamiento de tal manera que retiene una elasticidad que imparte una fuerza de desviación a los extremos de la presilla de tal manera que los extremos sujetan la flecha de la aguja y cuando el alojamiento se hace avanzar más allá de la punta distal de la aguja, el extremo distal de la presilla se libera para contener la punta distal de la aguja dentro del alojamiento

2 - El aparato de conformidad con la reivindicación 1, caracterizado además porque la presilla es una primera presilla y el aparato comprende además una segunda presilla que tiene un puente, un extremo proximal acoplado al puente y un extremo distal acoplado al puente, la segunda presilla estando dispuesta dentro del alojamiento de tal manera que retiene una elasticidad que imparte una fuerza de desviación a los extremos de la presilla de tal manera que los extremos sujetan la flecha de la aguja y cuando el extremo distal del alojamiento se hace avanzar más allá de la punta

distal de la aguja, el segundo extremo distal de la presilla se libera para contener la punta distal de la aguja dentro del alojamiento

3 - El aparato de conformidad con la reivindicación 2, caracterizado además porque el extremo distal de la primera presilla y el extremo distal de la segunda presilla se enganchan uno con el otro al liberarse para contener la punta distal de la aguja dentro del alojamiento

4 - El aparato de conformidad con la reivindicación 2, caracterizado además porque el primero y segundo extremos de presilla terminan en lengüetas que definen una circunferencia semicircular configurada para recibir la flecha de la aguja

5 - El aparato de conformidad con la reivindicación 2, caracterizado además porque la primera presilla y la segunda presilla comprenden cada una un puente arqueado acoplado al extremo distal y al extremo proximal

6 - El aparato de conformidad con la reivindicación 2, caracterizado además porque los extremos proximales y los extremos distales de la primera presilla y la segunda presilla están engoznados al puente de tal manera que el ángulo formado por los goznes es menor de 90 grados cuando el extremo proximal y el extremo distal de la presilla enganchan a la flecha de la aguja

7 - El aparato de conformidad con la reivindicación 6, caracterizado además porque los extremos proximales de la primera presilla y la segunda presilla enganchan a la flecha de la aguja para obstruir el avance

del alojamiento hacia la punta distal de la aguja cuando los extremos distales de la primera presilla y la segunda presilla se liberan

8 - El aparato de conformidad con la reivindicación 2, caracterizado además porque la primera y segunda presillas están hechas de acero inoxidable

9 - El aparato de conformidad con la reivindicación 2, caracterizado además porque el alojamiento define además una ventana para ver la punta distal de la aguja cuando está contenida dentro del alojamiento

10 - El aparato de conformidad con la reivindicación 2 caracterizado además porque el alojamiento tiene forma de barril

11 - El aparato de conformidad con la reivindicación 4, caracterizado además porque las lengüetas definen una circunferencia semicircular excéntrica que tiene lados de longitudes sustancialmente no equivalentes

29 34

RA 359443

THE UNITED STATES OF AMERICA

TO ALL TO WHOM THESE PRESENTS SHALL COME:

UNITED STATES DEPARTMENT OF COMMERCE

United States Patent and Trademark Office

February 06, 2001

THIS IS TO CERTIFY THAT ANNEXED HERETO IS A TRUE COPY FROM THE RECORDS OF THE UNITED STATES PATENT AND TRADEMARK OFFICE OF THOSE PAPERS OF THE BELOW IDENTIFIED PATENT APPLICATION THAT MET THE REQUIREMENTS TO BE GRANTED A FILING DATE UNDER 35 USC 111

APPLICATION NUMBER *09/476,424*
FILING DATE *December 30, 1999*

By Authority of the
COMMISSIONER OF PATENTS AND TRADEMARKS

P SWAIN
Certifying Officer

01-03-00

Please type a plus sign (+) inside this box → [+]

PTO/SB/05 (9/98)
Approved for use through 09/30/00. OMB 0651-0032
Patent and Trademark Office; U.S. DEPARTMENT OF COMMERCE
Under the Paperwork Reduction Act of 1995, no persons are required to respond to a collection of information unless it displays a valid OMB control number.

UTILITY PATENT APPLICATION TRANSMITTAL

(Only for new nonprovisional applications under 37 CFR 1.53(b))

Attorney Docket No.	056301.P483
First Inventor or Application Identifier	Butch Allmon
Title	NEEDLE SAFETY COVER
Express Mail Label No.	EM020281588US

APPLICATION ELEMENTS
See MPEP chapter 600 concerning utility patent application contents

ADDRESS TO: Assistant Commissioner for Patents
Box Patent Application
Washington, DC 20231

1. [X] Fee Transmittal Form (e.g. PTO/SB/17)
(Submit an original, and a duplicate for fee processing)
2. [X] Specification — Total Pages [12]
(preferred arrangement set forth below)
   - Descriptive title of the invention
   - Cross References to Related Applications
   - Statement Regarding Fed sponsored R & D
   - Reference to Microfiche Appendix
   - Background of the invention
   - Brief Summary of the invention
   - Brief Description of the Drawings (if filed)
   - Detailed Description
   - Claim(s)
   - Abstract of the Disclosure
3. [X] Drawing(s) (35 U.S.C.113) — Total Sheets [3]
4. Oath or Declaration — Total Pages [2]
   a. [X] Newly executed (original copy)
   b. [ ] Copy from a prior application (37 CFR 1.63(d))
   (for continuation/divisional with Box 16 complete)
   i. [ ] DELETION OF INVENTOR(S)
   Signed statement attached deleting inventor(s) named in the prior application, see 37 CFR 1.63(d)(2) and 1.33(b).

NOTE FOR ITEMS 1 & 13: IN ORDER TO BE ENTITLED TO PAY SMALL ENTITY FEES, A SMALL ENTITY STATEMENT IS REQUIRED (37 C.F.R. § 1.28), EXCEPT IF ONE FILED IN A PRIOR APPLICATION IS RELIED UPON (37 C.F.R. § 1.28).

5. [ ] Microfiche Computer Program (Appendix)
6. Nucleotide and/or Amino Acid Sequence Submission
(if applicable, all necessary)
   a. [ ] Computer Readable Copy
   b. [ ] Paper Copy (identical to computer copy)
   c. [ ] Statement verifying identity of above copies

ACCOMPANYING APPLICATION PARTS

7. [X] Assignment Papers (cover sheet & document(s))
8. [ ] 37 CFR 3.73(b) Statement (when there is an assignee) [ ] Power of Attorney
9. [ ] English Translation Document (if applicable)
10. [ ] Information Disclosure Statement (IDS)/PTO 1449 [ ] Copies of IDS Citations
11. [ ] Preliminary Amendment
12. [X] Return Receipt Postcard (MPEP 503)
(Should be specifically itemized)
13. [ ] *Small Entity Statement(s) [ ] Statement filed in prior application, Status still proper and desired
14. [ ] Certified Copy of Priority Document(s)
(if foreign priority is claimed)
15. [X] Other: Check No. 14650 for $690
Check No. 14648 for $40

16. If a CONTINUING APPLICATION, check appropriate box, and supply the requisite information below and in a preliminary amendment:
[ ] Continuation [ ] Divisional [ ] Continuation-in-part (CIP) of prior application No: ____/____
Prior application Information: Examiner ____ Group/Art Unit: ____
For CONTINUATION or DIVISIONAL APPS only: The entire disclosure of the prior application, from which an oath or declaration is supplied under Box 4b, is considered a part of the disclosure of the accompanying continuation or divisional application and is hereby incorporated by reference. The incorporation can only be relied upon when a portion has been inadvertently omitted from the submitted application parts.

17. CORRESPONDENCE ADDRESS

[ ] Customer Number or Bar Code Label (Insert Customer No. or Attach bar code label here) or [X] Correspondence address below

Name	BLAKELY SOKOLOFF, TAYLOR & ZAFMAN LLP				
Address	12400 Wilshire Boulevard, Seventh Floor				
City	Los Angeles	State	California	Zip Code	90025
Country	U.S.A.	Telephone	(310) 207-3800	Fax	(310) 820-5988

Name (Print/Type)	Charles T.J. Weigell, Reg. No. 43,398		
Signature		Date	12/30/99

Burden Hour Statement: This form is estimated to take 0.2 hours to complete. Time will vary depending upon the needs of the individual case. Any comments on the amount of time you are required to complete this form should be sent to the Chief Information Officer, Patent and Trademark Office, Washington, DC 20231. DO NOT SEND FEES OR COMPLETED FORMS TO THIS ADDRESS. SEND TO: Assistant Commissioner for Patents, Box Patent Application, Washington, DC 20231.

12/30/99 PTO U.S.

33
31

Attorney's Docket No 056301 P483
Express Mail No EM020281588US

UNITED STATES PATENT APPLICATION

FOR

NEEDLE SAFETY COVER

Inventors.

Butch Allmon

Prepared by
BLAKELY SOKOLOFF TAYLOR & ZAFMAN LLP
12400 Wilshire Boulevard, Seventh Floor
Los Angeles, California 90025
(310) 207-3800

NEEDLE SAFETY COVER

Field of the Invention

This invention relates to the field of medical devices and in particular to a needle safety cover

Background

Blood borne diseases such as AIDS and Hepatitis present significant risks to medical personnel administering vascular injections The means by which a patient's vessel and skin are pierced to either draw or introduce fluids can just as effectively pierce the hands and arms of attending medical personnel. Gloves or similar protective garb may provide some protection, but making such items entirely resistant to needle penetration oftentimes sacrifices the wearer's mobility and dexterity proportionate to the degree of protection Therefore, protective wear is not a total answer to the problem.

In order to adequately protect medical personnel from inadvertent puncture and wounding, catheter systems have been developed to cover and shield the distal needle point after its withdrawal from the patient. These systems have taken a number of embodiments and have various degrees of elaboration. One such mechanism includes a cylindrical sheath of plastic which telescopes out from the flash chamber to surround the needle shaft, including the distal tip Such mechanism increases costs of manufacture substantially and may malfunction, especially in a fluid filled environment where it may stick or slip The need for locking parts under these circumstances also increases risk of failure Other types of needle caps require moving parts, such as a spring activation, to close off the needle in the cap after its withdrawal These sometimes combine moving parts with specially tooled needles having two or more

separate widths so that the larger circumference and diameter either trips the spring and/or blocks the needle's removal from the cap

Given that the needle protector, however configured, will be contaminated upon each use, cost-benefit requirements dictate that a desirable shielding system be disposable along with the needle Furthermore, the system must be quick and easy to use as to present as little imposition as possible to the administration and function of the catheter Moving parts which may malfunction or stick such as springs and similar biasing mechanisms, as well as telescoping sheaths requiring deployment from the flash chamber, are less desirable in this regard and can drive up the manufacturing cost for a disposable unit. Lathing the needle circumference to alter the circumference over particular segments requires precise tooling and hence substantially added cost. What is desirable is a low cost, easily manufactured needle cover

SUMMARY

An apparatus is disclosed comprising a housing having a proximal end and a distal end, the housing slidably mounted on a needle shaft below a needle distal tip, the clip having a bridge, a proximal end coupled to the bridge and a distal end coupled to the bridge. The clip is disposed within the housing such that it retains a resilience imparting a biasing force to the clip ends such that the ends grip the needle shaft When the housing is advanced beyond the needle distal tip, the clip distal end releases to contain the needle distal tip within the housing

Other features and advantages of the invention will be apparent from the accompanying drawings and from the detailed description that follows below

BRIEF DESCRIPTION OF THE DRAWINGS

The invention is illustrated by way of example and not by way of limitation in the figures of the accompanying drawings in which like references indicate similar elements and in which.

Figure 1 shows a perspective view of an embodiment of the invention as fit over a needle shaft

Figure 2 shows a cutaway side view of one embodiment of the invention as fit over a needle shaft.

Figure 3 shows a cutaway side view of one embodiment of the invention as deployed over the distal tip of the needle

Figure 4 shows a perspective cutaway view of one embodiment of the invention deployed over the distal tip

Figure 5 shows a perspective view of a clip of one embodiment of the invention.

Figure 6 shows a top view of a flat metal piece prior to its bending to form a clip of one embodiment of the invention.

36 38

DETAILED DESCRIPTION

Figure 1 shows one embodiment of the invention where needle cover 10 is mounted upon a needle shaft 15 In this embodiment, housing 20 for needle cover 10 is barrel shaped Needle cover 10 is slidably mounted on needle shaft 15 and prior to its deployment, is located back from the needle distal tip (not pictured) such that the shaft extends through housing 20 of the needle cover 10 For ease of sliding, needle shaft 15 may be lubricated or coated

With reference to Figure 2, needle shaft 15 and distal tip 22 are illustrated with one embodiment of the invention mounted thereon. In this embodiment, the invention includes housing 20 defining openings 24, 26 at the proximal and distal ends, respectively, to accommodate needle shaft 15 extending therethrough. The openings have diameters slightly larger than needle shaft 15 outer diameter so that the housing 20 slides along needle shaft 15 and contacts substantially the entire needle shaft 15 outer circumference Inside housing 20 are clips 11, 12. In one embodiment, clips 11, 12 each having bridge 13 and two legs 16, 17 coupled to bridge 13 at opposite ends. In one embodiment, bridge 13 may be arched with the apex of the arch approaching or engaging horizontal walls 30 of housing 20 Clips 11, 12 are loaded into housing 20 under a compressive force which biases legs 16, 17 toward needle shaft 15 In one embodiment, housing 20 is made of a polymer and clips 11 and 12 are loaded as housing 20 is injection molded Clips 11, 12 may be made of resilient material so as to impart a memory upon bending or contorting clips 11, 12 into housing 15 when loaded As such, housing 15 and clips 11, 12 can be of a complementary size to accommodate biased clips 11, 12 and fit them within the housing.

Clip legs 16, 17 terminate in tabs 25 which define a semicircular circumference to fit around needle shaft 15 This allows for a more close fit of tabs 25 to the needle shaft

15 increasing their grip thereon. In one embodiment, tab ends (not pictured) are not equivalent lengths, rather one is shorter than the other The resulting arc, of the defined circumference therefore is eccentric Such configuration allows for a greater ability to grip needle shaft 15 when legs 16, 17 are contorted to engage needle shaft 15 at an angle to bridge 13 less then 90 degrees, providing for greater constrictive force, imparting greater potential energy to the bias resilience than engaging needle shaft 15 at a 90 degree angle where legs 16, 17 are directed toward needle shaft 15 The angular engagement of legs 16, 17 of the opposing tabs at the proximal end of housing 20 also provide greater restrictive force opposing advancement of housing 20 toward distal end 22 of needle shaft 15, thus obstructing removal of housing 20 over distal tip 22 when legs 16 have deployed over distal tip 22.

Figure 3 shows the result of sliding housing 20 over distal tip 22 of the needle shaft 15 As tabs 25 of front legs 16 of clips 13 are biased against the needle shaft, advancing the cover 10 over distal tip 22 and past the point of contact with tabs 25 of front legs 16, causes legs 16 to release with resilient force to fit over distal tip 22. In another embodiment, the two opposing legs 16 and tab ends 25 may meet and rest on each other- either eliminating or so constricting the area between tabs 25 to a size smaller than the needle outer diameter, including the outer diameter at the distal tip 22, so that reinsertion through front opening 24 is blocked

As the front legs 16 deploy, by resilient force, over distal tip 15 to block its reinsertion through opening 24, rear legs 17, given their obtuse angles to needle shaft 15, inhibit further frontal movement of housing 20 toward distal tip 22 thus preventing removal of the housing 20 over distal tip 22 and obstructing sliding housing 20 too far forward on needle shaft 15, thus falling off distal tip 22.

Figure 4 shows an embodiment of the invention, where housing 20 is barrel shaped having a cylindrical configuration. Transparent windows 35 on opposing sides of the housing allow the user to view inside to determine if distal point 22 is contained therein, and thus blocked from reinsertion through opening 24. In one embodiment, windows 35 are located at a point equivalent to the distance distal point 22 would occupy upon deployment of clip legs 16. Inability to view distal tip 22 could then indicate clip legs 16 had not deployed and distal tip 22 could still re-emerge from distal opening 24 of the housing.

The housing is made from materials and in manners known in the art for catheter accessories such as polyurethane and other polymer materials It may be injection molded in accordance with the practice of the art. Metal reinforcing may be used to provide further support and strength within the polymer mix or the injection molding process

Figure 5 shows a metal clip 11 Clip 11 is bent at two ends to form legs 16 and 17, according to methods known in the art. In one embodiment bridge 13 is arched to provide greater biasing force to legs 16 and 17 Another embodiment allows the bridge 13 to remain substantially horizontal in relation to shaft 15 while legs 16, 17 are bent to form an angle to bridge 13 of less than 90 degrees and the biasing force imparted is analogous to a hinging force at the point of connection between bridge 13 and legs 16, 17 which impels legs 16, 17 to return to a straight or substantially perpendicular orientation with respect to bridge 13 Heat treatment of legs 16, 17 may be used to provide the biasing memory and hinge resilience Clip legs 16, 17 culminate in tabs 25 which define a semicircular circumferential surface for gripping needle shaft 15 In one embodiment, tabs 25 on each clip 11,12 define a semicircular circumference with sides not equivalent in length, and thus define an eccentric semicircle. Where clips 11, 12

engage needle shaft 15 using hinged legs 16, 17, thus meeting needle shaft 15 to create a hinge angle less than 90 degrees, the irregular tab lengths serve to keep the surface area gripping needle shaft 15 relatively constant and ensure a complete fit, with the longer tab side length directing the tabs along the circumference of the needle shaft 15 to the center of the tabs at the semicircle apex thus providing sufficient support to avoid slippage

Figure 6 illustrates clip 11 in a flat view before bending, illustrating tabs 25 and the semicircular space 40 they define to receive the needle shaft. Bending of legs 16, 17 where tabs 25 are located may be done by heat treatment to impart biasing memory and, in one embodiment, to arch bridge 13 In one embodiment, the bending can also be accomplished by a foreslide machine. Clips may be pressed or stamped from sheets The clips may be made of any suitable metal alloy known in the art. In one embodiment, these are stainless steel

In the preceding detailed description, the invention is described with reference to specific embodiments thereof It will, however, be evident that various modifications and changes may be made thereto without departing from the broader spirit and scope of the invention as set forth in the claims The specification and drawings are, accordingly, to be regarded in an illustrative rather than a restrictive sense.

CLAIMS

What is claimed is.

1 An apparatus comprising:

a housing having a proximal end and a distal end, the housing slidably mounted on a needle shaft below a needle distal tip, and

a clip having a bridge, a proximal end coupled to the bridge and a distal end coupled to the bridge, the clip disposed within the housing such that it retains a resilience imparting a biasing force to the clip ends such that the ends grip the needle shaft and when the housing is advanced beyond the needle distal tip, the clip distal end releases to contain the needle distal tip within the housing

2 The apparatus of claim 1, wherein the clip is a first clip and the apparatus further comprises:

a second clip having a bridge, a proximal end coupled to the bridge and a distal end coupled to the bridge, the second clip disposed within the housing such that it retains a resilience imparting a biasing force to the clip ends such that the ends grip the needle shaft and when the housing distal end is advanced beyond the needle distal tip, the second clip distal end releases to contain the needle distal tip within the housing

3 The apparatus of claim 2, wherein the distal end of the first clip and the distal end of the second clip engage each other upon their release to contain the needle distal tip within the housing.

4 The apparatus of claim 2, wherein the first and second clip ends terminate in tabs which define a semicircular circumference configured to receive the needle shaft.

5 The apparatus of claim 2, wherein the first clip and the second clip each further comprise an arched bridge coupled to the distal end and the proximal end

6. The apparatus of claim 2, wherein the first clip and second clip proximal ends and distal ends are hinged to the bridge such that the angle formed by the hinges is less than ninety degrees when the clip proximal end and distal end engage the needle shaft.

7 The apparatus of claim 6, wherein the proximal ends of the first clip and second clip engage the needle shaft so as to obstruct advancement of the housing toward the needle distal tip when the distal ends of the first clip and second clip release.

8 The apparatus of claim 2, wherein the first and second clips are fashioned from stainless steel

9 The apparatus of claim 2 wherein the housing further defines a window for viewing the needle distal tip when contained within the housing

10 The apparatus of claim 2, wherein the housing is barrel shaped

11 The apparatus of claim 4, wherein the tabs define an eccentric semicircular circumference having sides of substantially inequivalent lengths.

ABSTRACT

An apparatus was disclosed comprising a housing having a proximal end and a distal end, the housing slidably mounted on a needle shaft below a needle distal tip, the clip having a bridge, a proximal end coupled to the bridge and a distal end coupled to the bridge The clip is disposed within the housing such that it retains a resilience imparting a biasing force to the clip ends such that the ends grip the needle shaft When the housing is advanced beyond the needle distal tip, the clip distal end releases to contain the needle distal tip within the housing

Attorney's Docket No. 056301.P483

DECLARATION AND POWER OF ATTORNEY FOR PATENT APPLICATION

As a below named inventor, I hereby declare that:

My residence, post office address and citizenship are as stated below, next to my name.

I believe I am the original, first, and sole inventor (if only one name is listed below) or any original, first, and joint inventor (if plural names are listed below) of the subject matter which is claimed and for which a patent is sought on the invention entitled

NEEDLE SAFETY COVER

the specification of which [X] is attached hereto.
[ ] was filed on _____ as
United States Application Number _____
or PCT International Application Number _____
and was amended on _____
(if applicable)

I hereby state that I have reviewed and understand the contents of the above-identified specification, including the claim(s), as amended by any amendment referred to above. I do not know and do not believe that the claimed invention was ever known or used in the United States of America before my invention thereof, or patented or described in any printed publication in any country before my invention thereof or more than one year prior to this application, that the same was not in public use or on sale in the United States of America more than one year prior to this application, and that the invention has not been patented or made the subject of an inventor's certificate issued before the date of this application in any country foreign to the United States of America on an application filed by me or my legal representatives or assigns more than twelve months (for a utility patent application) or six months (for a design patent application) prior to this application.

I acknowledge the duty to disclose all information known to me to be material to patentability as defined in Title 37 Code of Federal Regulations, Section 1.56.

I hereby claim foreign priority benefits under Title 35, United States Code, Section 119(a)-(d), of any foreign application(s) for patent or inventor's certificate listed below and have also identified below any foreign application for patent or inventor's certificate having a filing date before that of the application on which priority is claimed:

Prior Foreign Application(s).

APPLICATION NUMBER	COUNTRY (OR INDICATE IF PCT)	DATE OF FILING (day, month, year)	PRIORITY CLAIMED
			☐ No ☐ Yes
			☐ No ☐ Yes
			☐ No ☐ Yes

I hereby claim the benefit under Title 35, United States Code, Section 119(e) of any United States provisional application(s) listed below:

APPLICATION NUMBER	FILING DATE

44-46

I hereby claim the benefit under Title 35, United States Code, Section 120 of any United States application(s) listed below and, insofar as the subject matter of each of the claims of this application is not disclosed in the prior United States application in the manner provided by the first paragraph of Title 35, United States Code, Section 112 I acknowledge the duty to disclose all information known to me to be material to patentability as defined in Title 37, Code of Federal Regulations, Section 1.56 which became available between the filing date of the prior application and the national or PCT international filing date of this application:

APPLICATION NUMBER	FILING DATE	STATUS (ISSUED, PENDING, ABANDONED)

I hereby appoint BLAKELY SOKOLOFF, TAYLOR & ZAFMAN a firm including: William E. Alford, Reg 37 764, Farzad E. Amini, Reg No 42,261, Amy M. Armstrong, Reg. No. 42,265 Aloysius T C AuYeung, Reg. No. 35,432, William Thomas Babbitt, Reg. No. 39,591, Carol F Barry, Reg. No. 41,600; Jordan Michael Becker Reg. No 39,602, Bradley J Bereznak, Reg. No. 33,474, Michael A. Bernadicou, Reg. No 35 934, Roger W Blakely, Jr., Reg. No. 25,831, Gregory D Caldwell, Reg. No. 39 926, Ronald C Card, Reg No. P44,587, Thomas M. Coester, Reg. No. 39 637, Michael Anthony DeSanctis, Reg. No 39,957 Daniel M De Vos, Reg. No 37,813, Robert Andrew Diehl, Reg No. 40,992, Matthew C. Fagan, Reg No. 37,542, Tarek N Fahmi, Reg No. 41,402, James Y Go, Reg. No. 40,621, James A Henry, Reg No. 41,064, Willmore F Holbrow III, Reg. No. 41,845, Sheryl Sue Holloway, Reg. No. 37,850; George W Hoover II, Reg No. 32,992, Eric S Hyman, Reg. No. 30,139 Dag H. Johansen, Reg. No. 36,172, William W Kidd, Reg. No. 31 772 Erica W Kuo, Reg. No 42,775, Michael J Mallie, Reg. No. 36,591 Paul A. Mendonsa, Reg. No 42,879; Darren J Milliken, Reg. No. 42,004, Thinh V Nguyen, Reg. No. 42,034, Dennis A Nicholls, Reg No. 42,036 Kimberley G Nobles, Reg. No. 38,255, Lisa A. Norris Reg No P44,976, Daniel E. Ovanezian, Reg. No. 41,236; Babak Redjaian, Reg. No. 42,096; William F Ryann, Reg. No. 44,313, James H. Salter Reg No. 35,668, William W Schaal, Reg. No. 39,018, James C. Scheller Reg. No. 31 195 Jeffrey S. Smith, Reg. No 39,377 Maria McCormack Sobrino, Reg No. 31,639 Stanley W Sokoloff Reg. No. 25 128 Judith A. Szepesi, Reg. No. 39,393, Vincent P Tassinari, Reg. No. 42,179 Edwin H. Taylor Reg. No. 25,129 George G C Tseng, Reg. No. 41,355 Joseph A. Twarowski, Reg No. 42,191 Lester J Vincent, Reg. No 31,460, John Patrick Ward, Reg. No. 40,216, Charles T J Weigell, Reg. No. 43,398, Kirk D Williams Reg. No. 42,229, James M. Wu, Reg. No. P45,241, Steven D Yates, Reg No 42,242, Ben J Yorks, Reg. No. 33,609, and Norman Zafman, Reg. No. 26,250; my attorneys, and Justin M. Dillon, Reg. No. 42,486, Edwin A. Sloane, Reg. No. 34,728, and John F Travis, Reg. No 43,203, my patent agents, with offices located at 12400 Wilshire Boulevard, 7th Floor, Los Angeles, California 90025 telephone (310) 207-3800, with full power of substitution and revocation, to prosecute this application and to transact all business in the Patent and Trademark Office connected herewith.

I hereby declare that all statements made herein of my own knowledge are true and that all statements made on information and belief are believed to be true, and further that these statements were made with the knowledge that willful false statements and the like so made are punishable by fine or imprisonment, or both, under Section 1001 of Title 18 of the United States Code and that such willful false statements may jeopardize the validity of the application or any patent issued thereon.

Full Name of Sole/First Inventor (given name family name) Butch Allmon

Inventor's Signature Butch Allmon Date 12-29-99

Residence Paradise, Texas (City State) Citizenship U S A (Country)

P O Address 983 County Road 3673

Paradise Texas 76073-4509 U S A

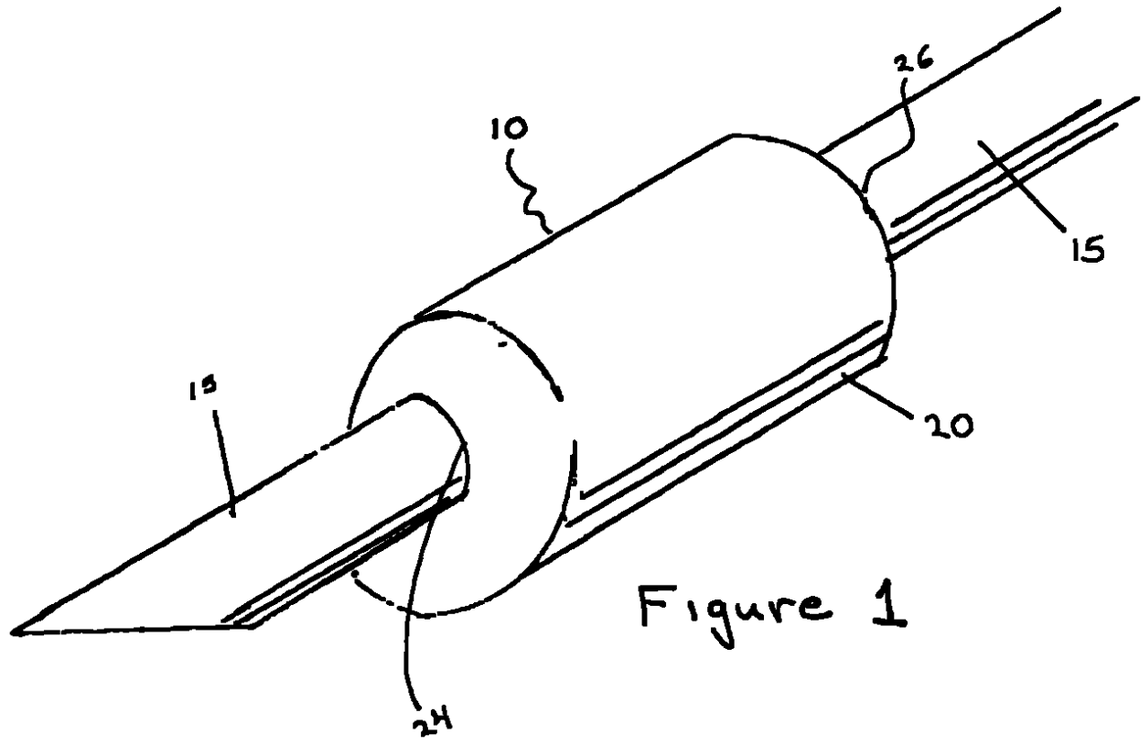

Figure 1

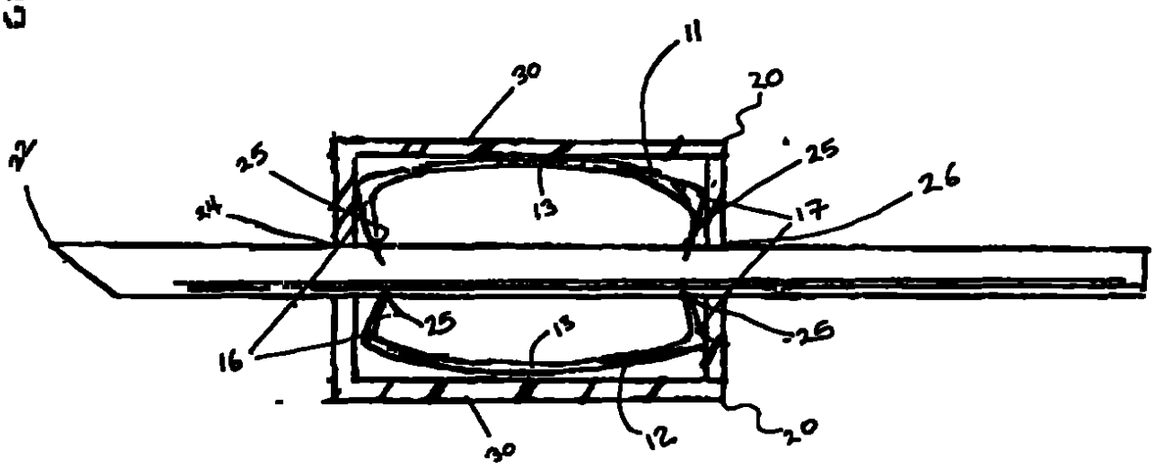

Figure 2

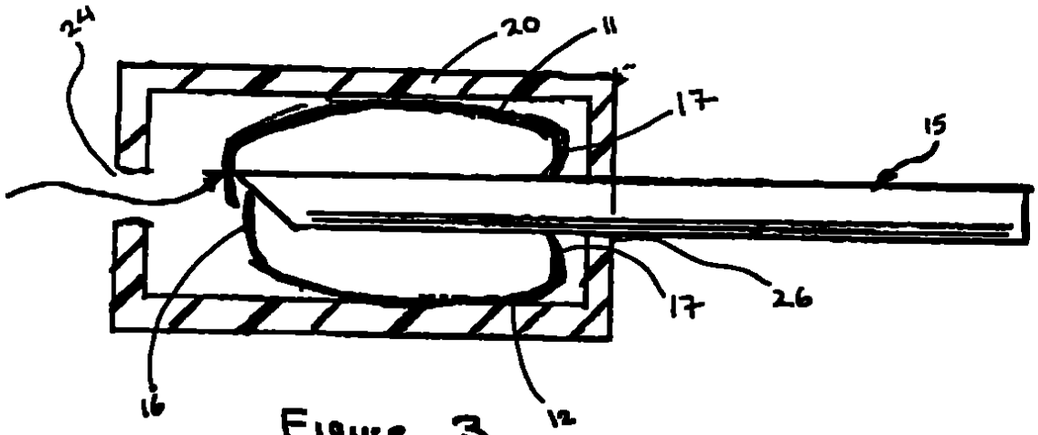

Figure 3

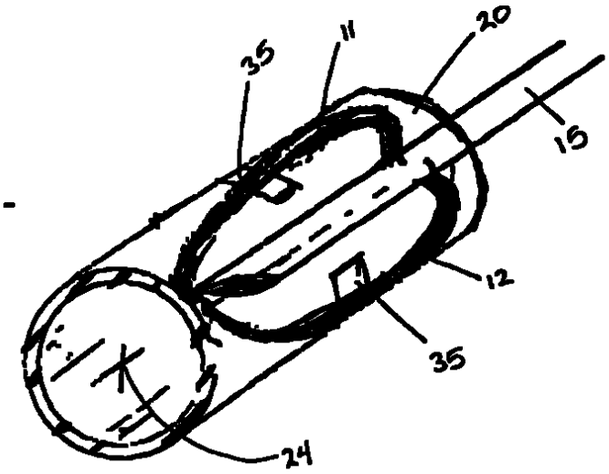

Figure 4

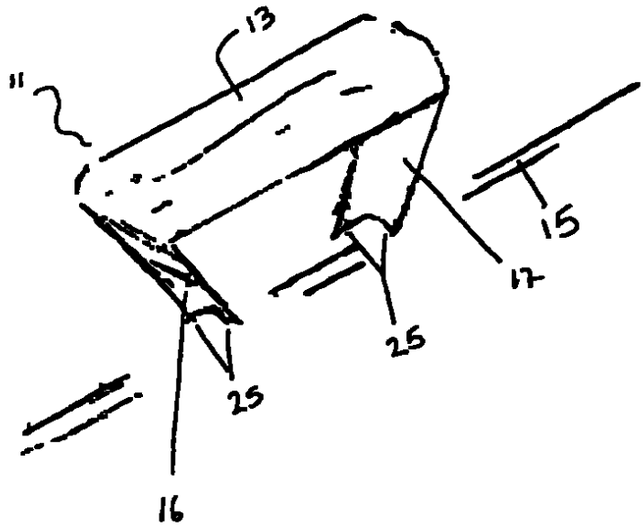

Figure 5

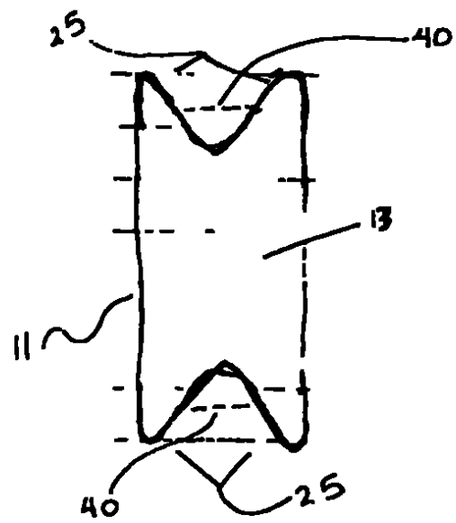

Figure 6