Industria y Comercio
SUPERINTENDENCIA

Prosperidad para todos

SUPERINTENDENCIA DE INDUSTRIA Y COMERCIO	
RAD: 12-31822- -4	**FECHA**: 2014-05-23 16:10:10
DEP: 2020 DIRECCION DE NUEVAS CREACIONES	**EVE:** 1 REGISTRO/DEPOSITO/CONCESION/DEPOSITO
TRA: 2 PATENTES DE INVENCION	**FOLIOS**: 7
ACT: 519 PRESENTACION	

DIRECCIÓN DE NUEVAS CREACIONES

2020
Bogotá, D.C.,

Abogado(a)/Señor(a)
LUZ CLEMENCIA DE PAEZ

Asunto: Radicación: 12-31822- -4
Trámite: 2
Evento: 1
Actuación: 519
Oficio: 6234
Folios: 7

Patente de Invención	X			Patente de Modelo de Utilidad	
Vía Nacional	X				
Vía PCT (Fase Nacional)		Capítulo I		Capítulo II	
No. Solicitud Internacional					
Fecha de Presentación Internacional					

Como resultado del examen de fondo realizado, con fundamento en el Artículo 45 de la Decisión 486 de la Comisión de la Comunidad Andina, se comunica:

1. Documentos estudiados

Descripción:	Rad. N° 12-031822-000000-0000	23/Febrero/2012
Reivindicaciones:	Rad. N° 12-031822-000000-0000	23/Febrero/2012
Dibujos:	Rad. N° 12-031822-000000-0000	23/Febrero/2012
Prioridad:	BR PI1100234-4	23/Febrero/2011

2. Análisis de la Prioridad

Se acepta la reivindicación de prioridad porque ésta solicitud fue presentada dentro del plazo establecido (Art. 9 D 486) y su contenido técnico corresponde con el de la prioridad reivindicada.

3. Objeto de la invención

De acuerdo con lo establecido en el numeral 1.2.2.2 del Capítulo Primero del Título X de la Circular Única para efectos del examen de patentabilidad, se tendrá en cuenta la tasa pagada por el solicitante al momento de comenzar el examen para las reivindicaciones adicionales; esto es que cuando la solicitud contenga más de diez (10) reivindicaciones y no se haya pagado la tasa complementaria, sólo se estudiarán las cubiertas por la tasa pagada. Por lo tanto, se estudiaran las reivindicaciones 1 a X.

Título de la solicitud: "Planta de manipulación integrada y descontaminación de residuos agroquímicos y proceso de tratamiento de agroquímicos" (Fl. 1).

El problema planteado en esta solicitud, consiste en la necesidad de diseñar una planta integral para el manejo de agroquímicos, en donde se lleve a cabo la mezcla, manipulación y descontaminación de los mismos, con el fin de lograr la mitigación del riesgo ambiental causado por este tipo de sustancias, además de promover la preservación de la salud y seguridad de los operadores.

Para resolver este problema técnico, la solicitud en estudio propone una planta integral para el manejo de agroquímicos, que consta de una unidad de suministro de agua, unidades de descontaminación, las cuales están ubicadas sobre un piso que comprende canaletas de recolección, una unidad de tratamiento de residuos y una unidad de transporte.

El objeto de la presente solicitud se relaciona con la Clasificación Internacional de Patentes (CIP): C 02 F 103/34.

4. De la solicitud de patente

Reivindicaciones (Art 30 D 486, Art 22 PCT)

El capítulo reivindicatorio no es claro porque:

1– Las reivindicaciones 2 y 3, y las expresiones *"que almacena y guarda envases vacías y ya utilizadas"* (reivindicación 4) y *"que puede ser utilizada para el almacenamiento de tanques, estacionamiento de pulverizadores aéreos o terrestres, o además, de la unidad de transporte (7)"* (reivindicación 5); describen funciones, usos, efectos, ventajas o resultados a alcanzar, los cuales no son aspectos susceptibles de patente. Cabe aclarar que el producto reclamado se debe definir técnicamente mediante sus características estructurales. Se sugiere al solicitante eliminar las reivindicaciones y expresiones citadas.

2– Las reivindicaciones 11 y 12 y la expresión *"….estando comprendida en la planta además una unidad de transporte (7) (…) para la preparación de la mezcla."*, se refieren a la unidad de transporte (7), la cual no hace parte de las instalaciones de la planta como tal, sino es un vehículo que se utiliza para el transporte y la mezcla del agroquímico. De acuerdo con lo expuesto, se considera que dicha unidad de transporte es una invención diferente a la planta de manipulación de agroquímicos. En consecuencia, teniendo en cuenta que la unidad de transporte (7) es un elemento ajeno al objeto de la solicitud, se sugiere al solicitante eliminar la expresión y reivindicaciones citadas.

Descripción (Art 28 D 486)

1– Se presentan incoherencias entre la descripción y los dibujos de la solicitud, toda vez que en la descripción se menciona que: *"La unidad de descontaminación de terrestres 11 está además al lado de la pista de despegue y aterrizaje 13"* (Pág. 9, líneas 21 a 23), mientras que en los dibujos se muestra que dicha pista de despegue y aterrizaje (13) está cerca de la unidad de descontaminación de aeronaves (12). Se

sugiere realizar las correcciones correspondientes.

2– En la descripción se utiliza el número de referencia (7) para la unidad de suministro de agua (Pág. 13, línea 3), mientras que en los dibujos se utiliza el número de referencia (5) para identificar la misma característica. Se sugiere realizar las correcciones correspondientes.

5. Determinación del Estado de la Técnica

El estado de la técnica se determinó con base en la fecha de presentación de la solicitud de prioridad invocada: febrero 23 de 2011, y se encontraron los siguientes documentos que anticipan el objeto de esta solicitud:

Ítem	Documento	Título	Fecha de Publicación
D1	Libro	'Designing facilities for pesticide and fertilizer containment'	1991
D2	US 3'976.087	'Closed mixing system for tending agricultural sprayers'	24/Agosto/1976

El documento D1[1] divulga una compilación de información asociada con el diseño de instalaciones para el almacenamiento, manejo y uso de pesticidas y fertilizantes (Pág. 1, Col. 1, Párr. 2, Capítulo 1. Facilities Overview – Introduction)

El documento D2 [2] enseña un sistema cerrado de dosificación, medición y mezcla de agroquímicos dispuesto en un vehículo que aprovisiona un pulverizador (resumen).

6. Examen de Patentabilidad (Art 14 D486)

Novedad (Art 16 D486)

La reivindicación 1 consiste en: "Planta de manipulación integrada y descontaminación de residuos agroquímicos, caracterizado porque comprende en un único lugar: -una unidad de suministro de agua (5)…" (Ver página 27 del radicado Nº 12-31822-00000-0000).

Comparación de las características técnicas esenciales, con las del estado de la técnica:

Características esenciales	D1
Planta de manipulación integrada y descontaminación de residuos agroquímicos, caracterizada por:	Diseño de instalación para pesticidas y fertilizantes, caracterizada por:
Unidad de suministro de agua.	Unidad de suministro de agua – Tanque de agua (Fig. 9)
Unidad de descontaminación localizada sobre el piso, siendo que el piso está en comunicación fluida con una canaleta de recolección que a su vez está en comunicación fluida con una unidad de tratamiento de residuos.	Comprende un área de mezcla (Fig. 9; Capítulo 4. Functional System Design, Pág. 14, Col. 2, Párr. 1 – Aerial Applicator Facility), en donde se hace el lavado de los pulverizadores aéreos o terrestres (Capítulo 4. Functional System Design, Pág. 10, Col. 1, Párr. 3 – Mixing/Loading Area). La unidad de descontaminación está localizada en el piso, que está en comunicación fluida con el sumidero (Fig. 9). El sumidero está en comunicación fluida con la unidad de tratamiento (Fig. 87).

1 http://infohouse.p2ric.org/ref/50/49471.pdf

2 https://www.google.com/patents/US3976087?dq=3976087&hl=en&sa=X&ei=us5zU6SbLITfsASvgYLACQ&ved=0CDcQ6AEwAA

De acuerdo con la tabla anterior, las características esenciales de la planta de la reivindicación 1 habían sido divulgadas previamente en el documento D1, por lo tanto, la materia reivindicada no es nueva.

Asimismo, el documento D1 divulga las características de las reivindicaciones dependientes asi:

- Reivindicación 4: La instalación consta del área de disposición de residuos, en donde se almacenan envases (Pág. 10, Col. 2, Párr. 2).

- Reivindicación 5: Unidad de abrigo para almacenamiento de quipos (Fig. 10).

- Reivindicación 6 y 7: Comprende un área de mezcla (Fig. 9; Capítulo 4. Functional System Design, Pág. 14, Col. 2, Párr. 1 – Aerial Applicator Facility), en donde se hace el lavado de los pulverizadores aéreos o terrestres (Capítulo 4. Functional System Design, Pág. 10, Col. 1, Párr. 3 – Mixing/Loading Area).

- Reivindicación 8: todas las unidades de la planta están sobre el piso (Figs. 5 a 10).

- Reivindicación 9: el piso posee sumideros (Figs. 5 a 10).

- Reivindicación 10: la unidad de tratamiento comprende una unidad de tratamiento de ozono, un filtro de partículas, un filtro de aceite y un filtro de carbón activado. El sistema de evaporación reduce el volumen del agua de enjuague y de los residuos, evaporando el agua de los sólidos (Pág. 88, Col. 2, Párrs. 2 y 4).

Cabe agregar, que aunque la unidad de transporte se considera un elemento ajeno al objeto de la solicitud, para un técnico normalmente versado en la materia son conocidos los vehículos para transportar agroquímicos, que comprendan un reservorio de agua y un reservorio para preparar la mezcla (D2: Col. 4, líneas 38 a 39; Col. 5, líneas 15 y 16)

Nivel inventivo (Art18 D486)

La reivindicación 13 consiste en*: "Proceso de tratamiento de agroquímico, caracterizado porque comprende las siguientes etapas: - desplazar una unidad de transporte (7) para recoger recipientes que contienen agroquímicos…"* (Ver página 41 del radicado Nº 12-31822-00000-0000).

Comparación de las características técnicas esenciales, con las del estado de la técnica:

Características esenciales	D1	D2
Proceso de tratamiento de agroquímicos, caracterizado por:	Diseño de instalación para pesticidas y fertilizantes, caracterizada por:	Sistema cerrado de mezcla para aprovisionar a pulverizadores, caracterizado por:
Desplazar una unidad de transporte para recoger recipientes que contienen agroquímico.	El área de mezcla y carga es usada para parquear los pulverizadores o equipos de transporte, durante la carga o descarga de pesticidas y fertilizantes (Capítulo 4. Functional System Design, Pág. 10, Col. 1, Párr. 3 – Mixing/Loading Area).	Una pluralidad de contenedores (22-29) contiene agroquímicos concentrados en forma de líquido (Col. 4, líneas 43 a 46).
Abastecer la unidad de transporte con agua.	No menciona	El vehículo que aprovisiona el pulverizador (10) comprende un tanque de almacenamiento de agua (20), que contiene agua

		usada como diluyente (Col. 4, líneas 39 y 40).
Preparar la mezcla en la unidad de transporte.	No menciona	Después de que una cantidad deseada de químico haya sido dirigido al tanque de mezcla (34), una cantidad de surfactante es dirigida al mismo tanque. En el conducto (44) la mezcla de químico se mezcla con agua del tanque de almacenamiento (20) (Col. 5, líneas 15 a 17 y 31 a 33)
Suministrar la mezcla a un pulverizador.	Cargar los pulverizadores aéreos o terrestres (Capítulo 4. Functional System Design, Pág. 10, Col. 1, Párr. 3 – Mixing/Loading Area).	El aparato de pulverización (14) es conectado al vehículo (10) mediante un cordón o manguera (18) y cargado con una mezcla diluida de agroquímicos que es preparada en el vehículo (10) (Col. 4, líneas 31 a 35).
Realizar la descontaminación por lavado con agua de dicha unidad de transporte o del pulverizador sobre un piso.	Descarga y limpieza de los tanques de los pulverizadores. Lavado externo de los pulverizadores aéreos y terrestres (Capítulo 4. Functional System Design, Pág. 10, Col. 1, Párr. 3 – Mixing/Loading Area).	No menciona.
Conducir el agua utilizada en la descontaminación a una unidad de tratamiento de residuos.	Todos los sumideros deben ser drenados. Todos los líquidos recuperados deben ser contenidos en tanque o dirigidos para evaporación (Capítulo 4. Mixing/loading facilities and equipment, Pág. 48, Col. 2, Párr. 7; Pág. 49, Col. 2, Párr. 1 – Sump and Drainage).	No menciona.

Los documentos D1 y D2 se consideran el estado de la técnica cercano a la invención definida en la reivindicación 13 porque divulgan el diseño para una instalación para pesticidas y fertilizantes (Pág. 1, Col. 1, Párr. 2, Capítulo 1. Facilities Overview – Introduction), y un sistema cerrado de mezcla para aprovisionar a pulverizadores (resumen).

La diferencia entre la invención, definida en la reivindicación 1 y el procedimiento de D1 consiste en que la unidad de transporte se abastece con agua y en la misma unidad se hace la mezcla del agroquímico.

La diferencia entre la invención, definida en la reivindicación 1 y el procedimiento de D2 consiste en la descontaminación por lavado con agua de dicha unidad de transporte o del pulverizador sobre un piso, y la conducción del agua utilizada en la descontaminación a una unidad de tratamiento de residuos.

El efecto que logra el incluir que la unidad de transporte se abastezca con agua y en la misma unidad se haga la mezcla del agroquímico, es prevenir el contacto prolongado del operador con el agroquímico, lo cual puede ser perjudicial para su salud y seguridad.

Por lo tanto, el problema técnico objetivo que pretende resolver esta invención se puede formular así: “¿cómo modificar el procedimiento conocido en D1 para prevenir el contacto prolongado del operador con el agroquímico, lo cual puede ser perjudicial para su salud y seguridad?”.

Sin embargo, que la unidad de transporte se abastezca con agua y en la misma unidad se haga la mezcla del agroquímico, para prevenir el contacto prolongado del operador con el agroquímico, lo cual puede ser perjudicial para su salud y seguridad, ya está divulgada en el

documento D2 que enseña que el vehículo que aprovisiona el pulverizador (10) comprende un tanque de almacenamiento de agua (20), que contiene agua usada como diluyente (Col. 4, líneas 39 y 40). Después de que una cantidad deseada de químico haya sido dirigido al tanque de mezcla (34), una cantidad de surfactante es dirigida al mismo tanque. En el conducto (44) la mezcla de químico se mezcla con agua del tanque de almacenamiento (20) (Col. 5, líneas 15 a 17 y 31 a 33). Lo anterior, con el fin de disminuir el contacto del operador con el agroquímico al realizar la mezcla (Col. 1, líneas 36 a 50).

En consecuencia, el la persona del oficio normalmente versada en la materia, incluiría el procedimiento consistente en que: después de que una cantidad deseada de químico haya sido dirigido al tanque de mezcla (34), una cantidad de surfactante es dirigida al mismo tanque. En el conducto (44) la mezcla de químico se mezcla con agua del tanque de almacenamiento (20) (Col. 5, líneas 15 a 17 y 31 a 33), del documento D2 en el procedimiento divulgado en el documento D1 para llegar así al objeto de la reivindicación 13 de la solicitud. Por lo cual se considera obvia.

Por su parte, los documentos D1 y D2 divulgan las características de las reivindicaciones dependientes así:

- Reivindicación 14: En el área de mezclado y carga se realiza el almacenamiento, manejo, mezclado y transferencia de pesticidas y fertilizantes líquidos (D1: Capítulo 4. Functional System Design, Pág. 10, Col. 1, Párr. 3 – Mixing/Loading Area).

- Reivindicación 15: el suministro de agua a la instalación de manejo de agroquímicos es realizado por el tanque de suministro de agua (Figs. 8, 9 y 45).

7. Conclusión

Los requisitos de Patentabilidad de la presente solicitud están afectados así:

Item	Documento	Reivindicaciones afectadas	Requisito que afecta
D1	Libro	1 a 15	Novedad/Nivel Inventivo
D2	US 3'976.087	13	Nivel inventivo

En cumplimiento del artículo 45 de la Decisión 486 de la Comisión de la Comunidad Andina, se le indica que debe dar respuesta dentro del término de sesenta (60) días contados a partir del día siguiente de la fecha de notificación de la presente comunicación. En caso de no dar respuesta al presente requerimiento, o si a pesar de la respuesta subsistieran los impedimentos para la concesión, se denegará la patente.

Se invita al solicitante se sirva indicar, si así lo considera, su renuncia al término faltante de sesenta (60) días para dar respuesta a este requerimiento y presentarla por escrito.

Finalmente, se le recuerda al solicitante que si como respuesta a este requerimiento llegara a modificar el capítulo reivindicatorio y éste contenga más de diez (10) reivindicaciones, no pagará la tasa de modificación voluntaria pero sí la correspondiente al pago por reivindicación adicional.

Notifíquese el presente oficio conforme a lo dispuesto en el numeral 5.2, literal e), del capítulo quinto del título primero de la Circular Única No. 10 de 2001.

JOSÉ LUIS SALAZAR LÓPEZ
Director de Nuevas Creaciones (c)

El anterior requerimiento fue notificado por fijación en lista, de fecha 2014-05-27

Elaboró: Monica Andrea Gutierrez Almonacid
Revisó: Rosa Patricia Tellez Chavarro

United States Patent [19]

Bolton et al.

[11] **3,976,087**

[45] **Aug. 24, 1976**

[54] **CLOSED MIXING SYSTEM FOR TENDING AGRICULTURAL SPRAYERS**

[75] Inventors: **Jack C. Bolton,** Salinas; **Franklin L. Alexander,** Hollister, both of Calif.

[73] Assignee: **Union Carbide Corporation,** New York, N.Y.

[22] Filed: **Aug. 11, 1975**

[21] Appl. No.: **603,292**

[52] **U.S. Cl.** **137/15;** 137/205; 137/240; 137/263; 137/351; 141/59; 239/148; 239/172

[51] **Int. Cl.**[2] **B05B 7/28**

[58] **Field of Search** 137/205, 351, 263, 1, 137/15, 240; 141/59; 239/148, 172

[56] **References Cited**

UNITED STATES PATENTS

2,285,581	6/1942	Horton	137/351 X
3,612,356	10/1971	McVey	239/172
3,640,319	2/1972	Hougen	137/205 X
3,797,744	3/1974	Smith	239/172

Primary Examiner—Alan Cohan
Attorney, Agent, or Firm—Robert C. Brown

[57] **ABSTRACT**

A closed agricultural chemical batching, measuring and mixing system is disclosed for mounting to a sprayer tending truck. The system includes a measuring tank on which a partial vacuum is drawn by opening a connection to the intake manifold of the internal combustion engine of the truck. The measuring tank is in turn communicated to at least one manifold having numerous valve control inlets, all communicated to discrete agricultural chemical containers which can include highly toxic liquid chemicals. At the inlet remote from the mixing tank, the manifold communicates to a supply of surfactant. Preselected amounts of the liquid chemicals are sequentially drawn by the partial vacuum through the valve controlled manifold and to the measuring tank in which they are accumulated. The surfactant is then drawn through the manifold and into the measuring tank to flush the system. As the chemicals and surfactant are drawn into the measuring tank, the fumes created by the chemicals in the measuring tank are drawn into the intake manifold of the engine and rendered substantially nontoxic. After mixing of the liquid chemicals and surfactant in the measuring tank, the vacuum is broken and the batch is dumped through a dump valve at the bottom of the tank. Simultaneously, a stream of water is discharged from a water storage tank on the tending truck through a conduit to a spray tank on a tractor spraying rig. The measured batch is drawn into the stream of water at less than atmospheric pressure through an induction manifold interposed in the water conduit and diluted by the water. Provision is made to introduce wetable powders into the stream of water in addition to the liquid agricultural chemicals. Thus, a closed mixing system is provided for both liquid and powdered agricultural chemicals.

18 Claims, 7 Drawing Figures

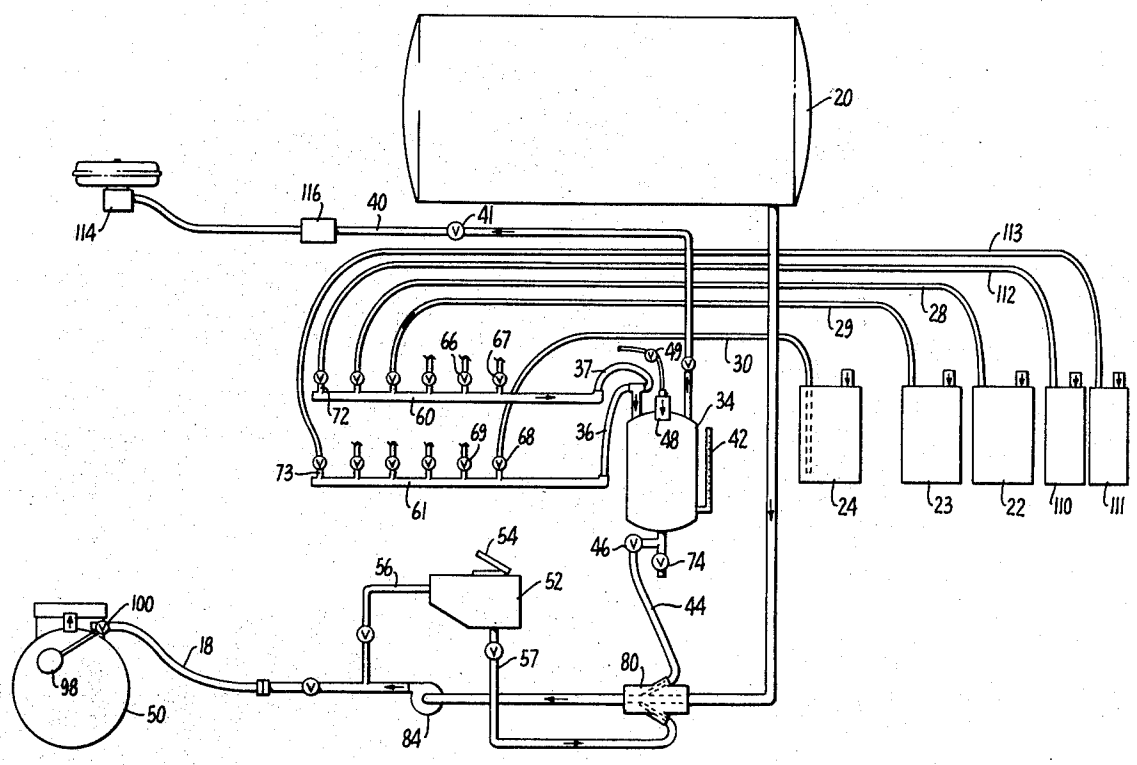

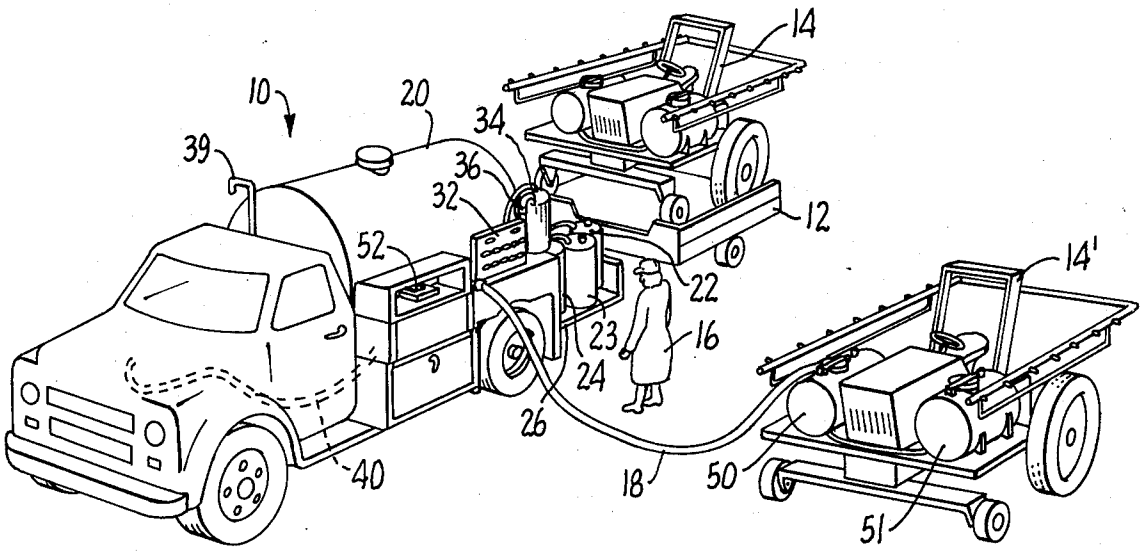
14
10
20
34
39
36
32
12
52
14'
22
23
16
24
26
40
18
50
51

FIG. 1.

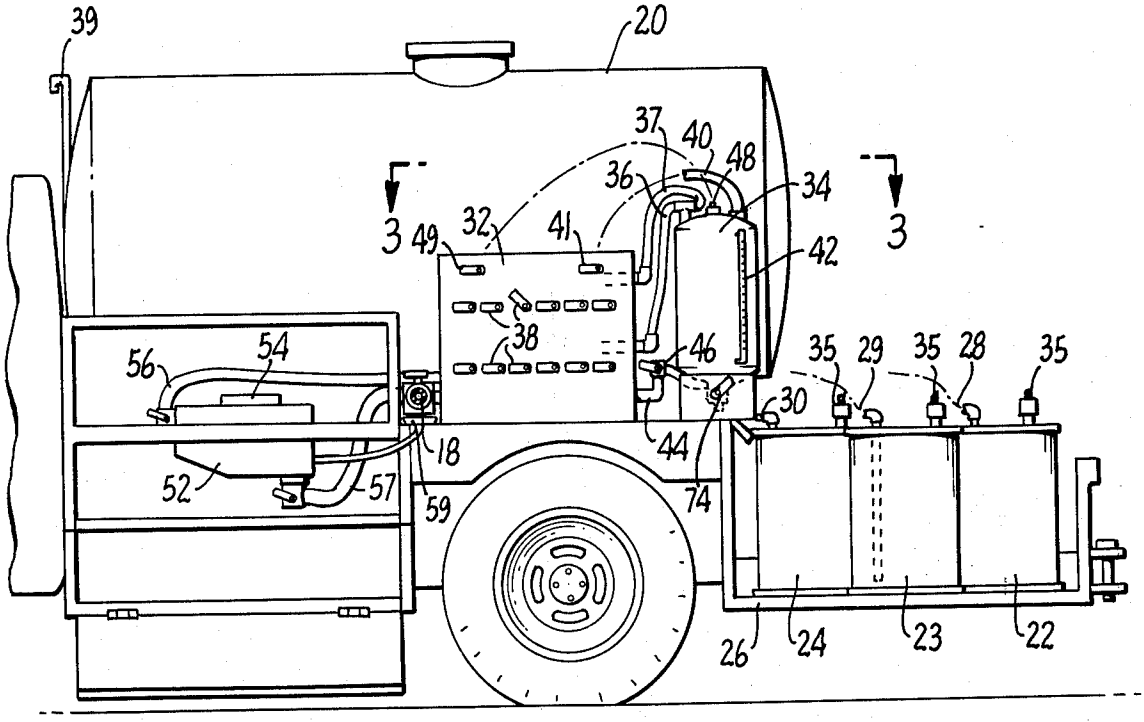
39
20
37
40
48
36
34
3
49
32
41
3
42
38
46
35
29
35
28
35
56
54
30
18
44
52
57
59
74
26
24
23
22

FIG. 2.

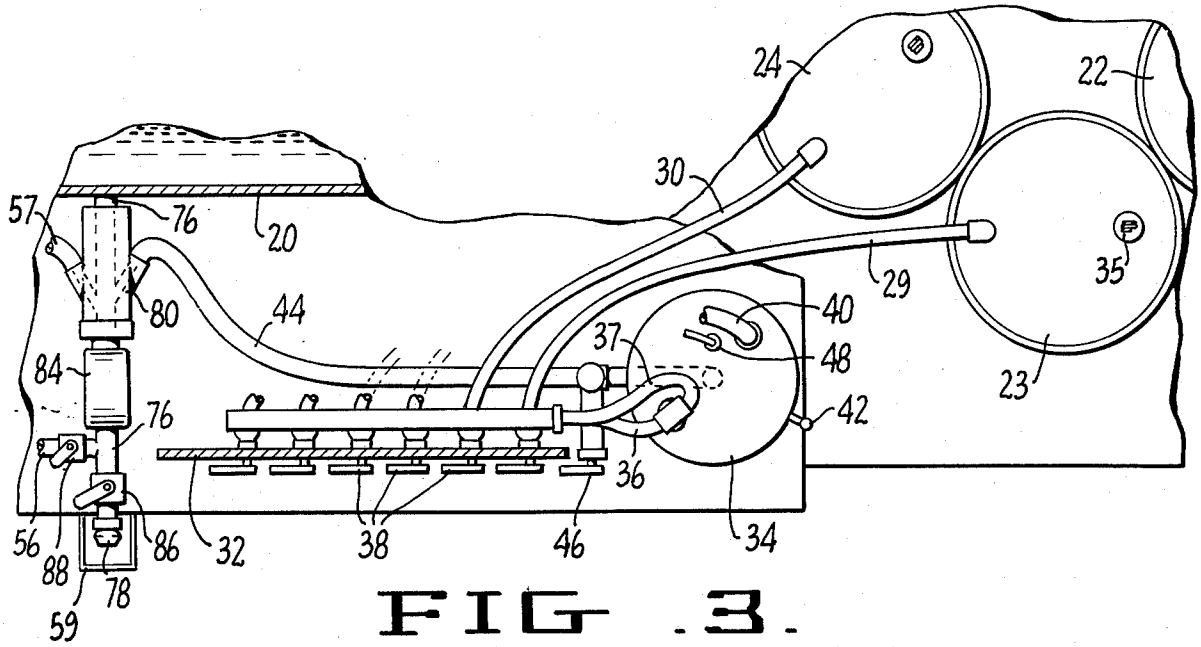

FIG. 3.

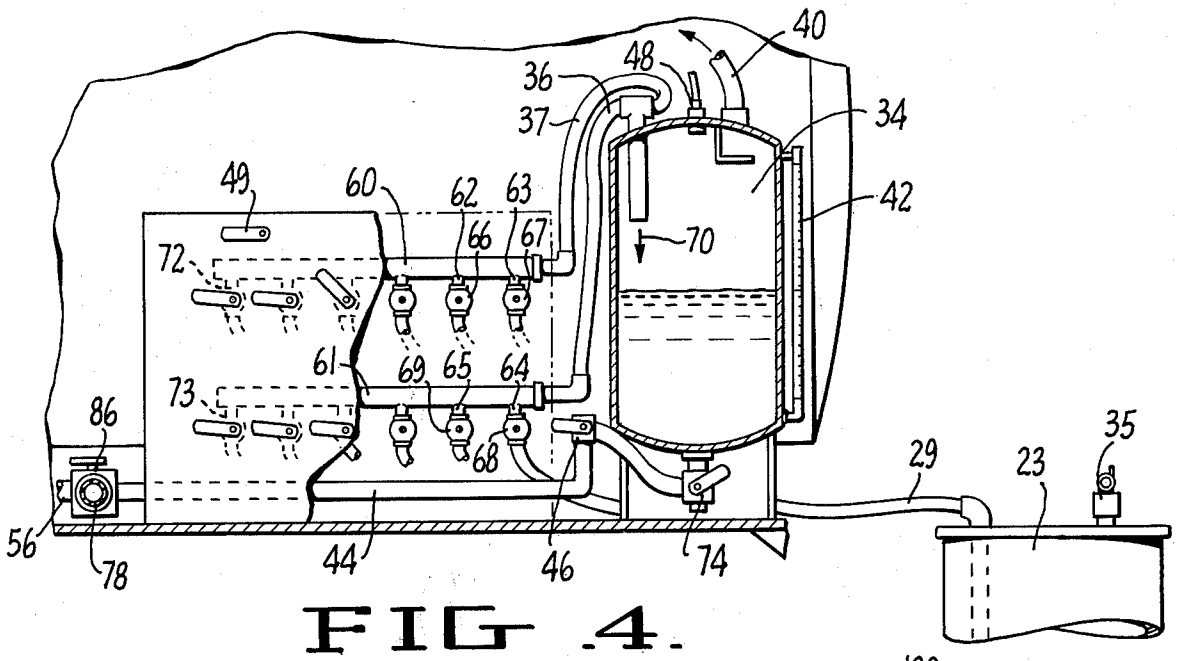

FIG. 4.

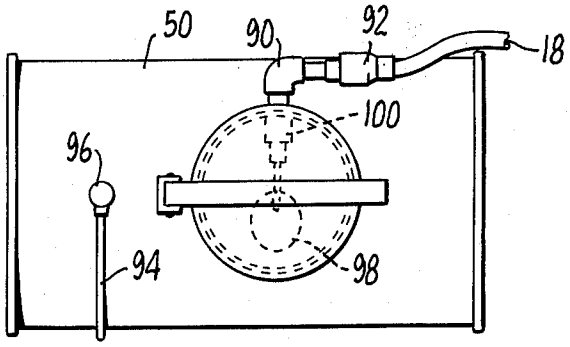

FIG. 5.

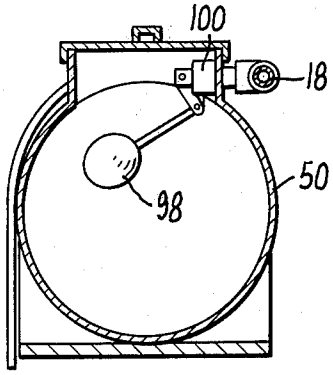

FIG. 6.

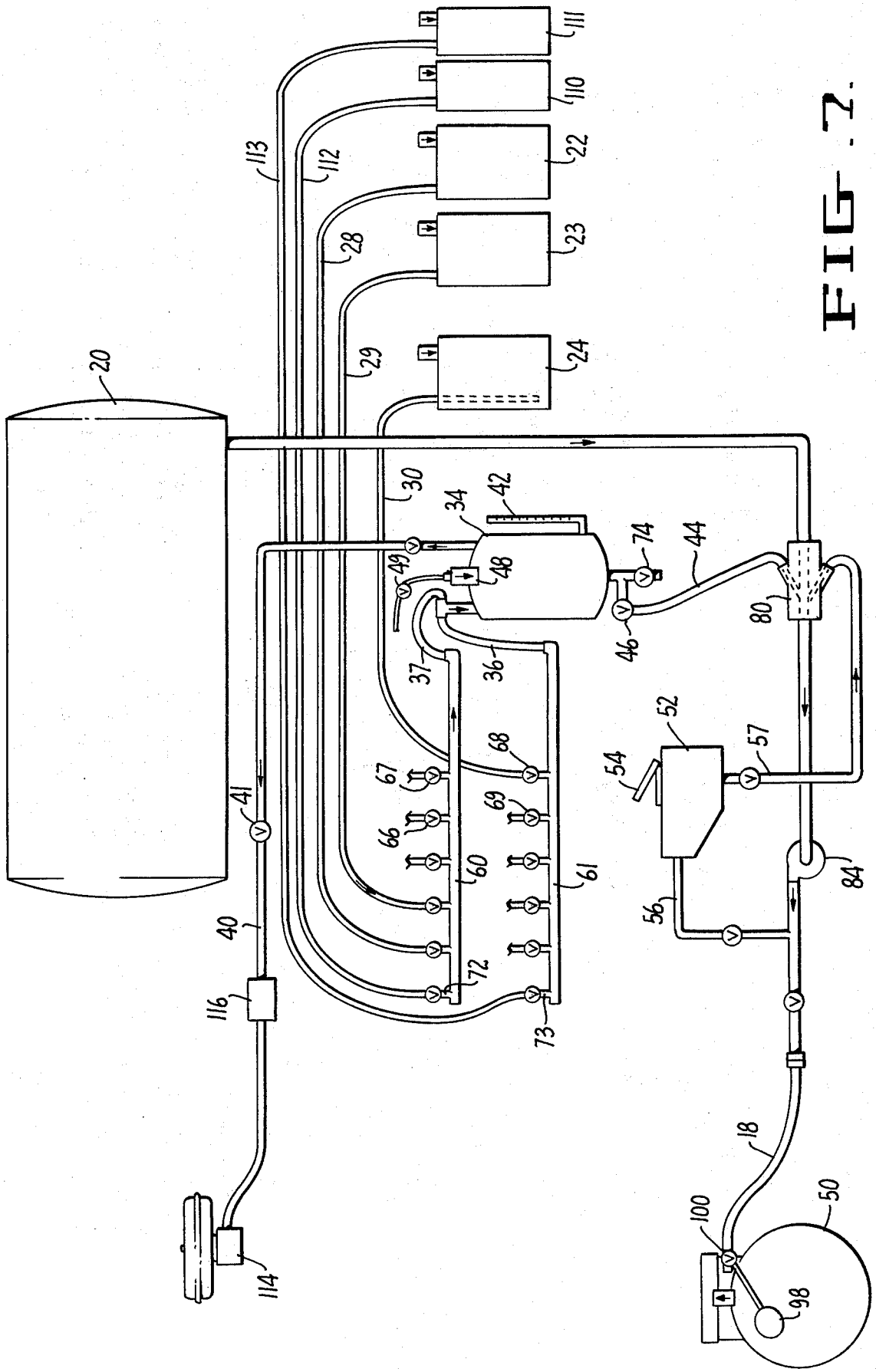
20
111
110
22
23
24
113
112
28
29
30
34
42
74
44
49
48
46
80
37
36
52
57
54
68
67
69
66
60
61
41
84
56
40
72
73
116
18
100
50
98
114

FIG. 7.

CLOSED MIXING SYSTEM FOR TENDING AGRICULTURAL SPRAYERS

BACKGROUND OF THE INVENTION

This invention relates to agricultural chemical spraying. More particularly, this invention relates to a closed system under vacuum for mixing and diluting agricultural chemicals in the field to provide a spray mixture.

STATEMENT OF THE PROBLEM

Agricultural chemicals have always constituted a problem from a worker's safety standpoint to people who work in and around the agricultural chemical spraying industry. Many of these chemicals are extremely toxic in their concentrated liquid form if any contact is made with the worker's body. In addition, the fumes from such chemicals can be extremely toxic if inhaled or if the fumes contact the worker's eyes or sensitive, exposed skin areas.

In the agricultural chemical spraying industry, a single worker is usually provided with both a service or tending truck and a tractor spraying rig towed by the service truck over the highway. The worker goes alone at night to the fields to be sprayed and takes the tractor spraying rig from the service truck trailer. The concentrated chemicals and dilutant water are carried on the service truck and are mixed and loaded into the tractor spraying rig tanks. With most conventional systems, the loading and mixing of the chemicals is performed manually by the worker using open top containers. The service truck ordinarily carries sufficient chemicals to load the tractor spraying rig four or five times. The chemicals must be transferred to the tractor spraying rig tanks and mixed each time to load the tractor.

If the operator of the service truck and tractor spraying rig is extremely careful, follows all of the prescribed safety procedures and wears the appropriate protective equipment, the hazards involved in measuring and transferring the chemicals to the tractor spraying rig are minimized. However, the spraying operation is ordinarily performed at night, when the worker has less visibility and spilling of the chemicals is more difficult to detect. Also, the lack of supervision and the repetitive nature of the task results in inevitable variances from the recommended safety procedures. As a consequence, injury to such workers from the liquid chemicals themselves or their fumes is extremely common and has proved in the past to be an unavoidable hazard of such spraying techniques.

SUMMARY OF THE PRIOR ART

To alleviate some of these problems, "closed" agricultural chemical transfer systems have been proposed. Instead of the open containers traditionally used, such closed transfer systems utilize positive pressure which is above atmospheric to transfer the chemicals to a mixing area and onto the spraying tractor. Couplings must be provided between various tanks containing the concentrated agricultural chemicals, the mixing area and the tractor spraying rig, and it is inevitable that as such systems are subjected to use, leaks of the chemicals will occur. Because the system operates at greater than atmospheric pressure, the concentrated chemicals will be forced out of the system and will present an extreme hazard to operating personnel. Furthermore, the positive pressure will force fumes from the agricultural chemicals into the atmosphere surrounding the

system, which again represents an extreme hazard to the operator of the system. Vacuum-type systems which operate at less than atmospheric pressure have been contemplated but have been considered unworkable because such systems would entail venting of the gaseous fumes to the atmosphere, which is unacceptable.

A frequent cause of premature failure in known closed agricultural chemical transfer systems is the metering of the chemicals as they are mixed into the system. Typically, positive displacement flow meters have been used to meter the highly corrosive agricultural chemicals. However, such meters almost always fail when they are used over prolonged periods of time under field conditions. Corrosion in occluded portions of the meter inevitably occurs and causes early and unsatisfactory meter failure.

SUMMARY OF THE INVENTION

The present invention provides a closed agricultural chemical batching, measuring and mixing system for mounting to a sprayer tending truck. The system includes a measuring tank on which a partial vacuum is drawn by opening a connection to the intake manifold of the internal combustion engine of the truck. The measuring tank is in turn communicated to at least one manifold having numerous valve control inlets, all communicated to discrete agricultural chemical containers which can include highly toxic liquid chemicals. At the inlet remote from the measuring tank, the manifold communicates to a supply of surfactant. Preselected amounts of the liquid chemicals are sequentially drawn by the partial vacuum through the valve controlled manifold and to the measuring tank in which they are measured. The surfactant is then drawn through the manifold and into the measuring tank to flush the system. As the chemicals and surfactant are drawn into the measuring tank, the fumes created by the chemicals in the measuring tank are drawn into the intake manifold of the engine and rendered substantially nontoxic.

After measuring of the liquid chemicals and surfactant in the measuring tank, the vacuum is broken and the batch is dumped through a dump valve at the bottom of the tank. Simultaneously, stream of water is discharged from a water storage tank on the tending truck through a conduit to a spray tank on a tractor spraying rig. The batch is drawn into the stream of water at less than atmospheric pressure through an induction manifold interposed in the water conduit and diluted by the water. Provision is made to introduce wetable powders into the stream of water in addition to the liquid agricultural chemicals. Thus, a closed mixing system is provided for both liquid and powdered agricultural chemicals.

The primary advantage of using a vacuum-type closed system, namely, the substantial reduction or elimination of leaks of the chemicals in their liquid or vapor form, has been known. However, the creation of the vacuum without venting the gaseous fumes directly into the atmosphere has heretofore been a problem. The present invention solves this problem by creating the vacuum with an internal combustion engine, preferably the engine used to power the tending truck, and conveying the fumes to that engine. In the engine, the high temperatures and pressures in the combustion chamber render the fumes substantially harmless and the exhaust of the engine is nontoxic. A liquid petroleum gas or propane engine is preferred because of the

higher temperatures achieved in the combustion process which enhances the detoxification of such fumes.

In the system of the present invention, all handling of the liquid chemicals in their concentrated state, either before or after measuring, is performed at less than atmospheric pressure. The concentrated liquid chemicals are drawn into the measuring tank by the partial vacuum provided by the engine. The mixed concentrated chemicals are drawn into the water stream by the partial vacuum provided by the induction manifold. It is only after the chemicals are diluted to reduce their toxicity that positive pressure is applied to pump the dilute chemicals to the tractor spraying rig tanks.

In the preferred embodiment of the present invention the measuring tank is provided with a sight tube which indicates the amount of liquid contained in the tank. The chemicals are added serially to the measuring tank and the amounts thereof controlled by the operator who operates the valve controlled manifold while watching the sight tube. The necessity of using a positive displacement flow meter is thereby eliminated to reduce the likelihood of premature mechanical system failure.

Also in the preferred embodiment of the present invention, the various containers of the agricultural chemicals are provided with valve connections to a manifold which is in turn connected to the measuring tank. Flow of the various chemicals to the measuring tank is controlled at the valve connections to the manifold. One of the containers is provided with a surfactant, and the surfactant is drawn through the manifold and into the measuring tank after the other chemicals. The surfactant acts to flush the manifold and the connection to the measuring tank to minimize the amount of concentrated liquid chemicals left standing in the system. As a result, corrosion of all fittings in the system is greatly minimized.

Another feature of the preferred embodiment of the present invention is the use of a sealed spray tank on the spraying tractor for retaining the dilute mixed chemicals just prior to spraying. Known spraying tractors employ a spray tank which is not sealed so that the operator can determine when the tank has been filled. However, in the preferred embodiment of the present invention a float actuated valve is provided in the sealed spray tank which automatically cuts off the flow of dilute chemicals to the tank and thereby allows for the use of such a sealed tank.

The novel features which are believed to be characteristic of the invention, both as to organization and method of operation, together with further objects and advantages thereof will be better understood from the following description considered in connection with the accompanying drawings in which a preferred embodiment of the invention is illustrated by way of example. It is to be expressly understood, however, that the drawings are for the purpose of illustration and description only and are not intended as a definition of the limits of the invention.

BRIEF DESCRIPTION OF THE DRAWINGS

FIG. 1 is a perspective view of a sprayer tending truck and tractor spraying rig incorporating the system of the present invention;

FIG. 2 is a side elevation view of the aft portion of the sprayer tending truck of FIG. 1;

FIG. 3 is a fragmentary plan view of the control system on the sprayer tending truck of the present invention taken along lines 3—3 of FIG. 2;

FIG. 4 is an elevation and partially broken away view of the apparatus of FIG. 3;

FIG. 5 is a plan view of one of the spray tanks on the tractor spraying rig;

FIG. 6 is a sectional view of the apparatus of FIG. 5; and

FIG. 7 is a schematic view of the system of the present invention.

DESCRIPTION OF THE PREFERRED EMBODIMENT

General Description

A complete spraying apparatus embodying the chemical batching and measuring system of the present invention is illustrated by way of reference to FIG. 1. The apparatus includes a sprayer tending truck **10** hitched to a tow trailer **12**. A tractor spraying rig **14** is mounted on trailer **12** for transportation along the highway, and is off loaded as illustrated at **14'** from trailer **12** in the vicinity of the fields to be sprayed.

In the agricultural chemical spraying industry, a single operator **16** is provided with the sprayer tending truck **10** with the tractor sprayer rig **14** loaded on trailer **12**. Operator **16** drives sprayer tending truck **10** to a point near the fields to be sprayed, usually late in the evening or shortly after nightfall. At the desired site, tractor spraying rig **14** is off loaded, connected to tending truck **10** by an umbilical **18** and loaded with a dilute mix of agricultural chemicals which are prepared on the tending truck and transferred to the spraying rig for spraying as desired. Spraying rig **14** is periodically reloaded throughout the night until the spraying operation is completed.

Sprayer tending truck **10** has a large water storage tank **20** containing water which is used as a dilutant. A plurality of smaller storage containers such as **22–24** are located on a platform **26** here shown at the back of tending truck **10**. Each container **22–24** contains a concentrated agricultural chemical in liquid form and is sealed to prevent the escape of chemical vapors to the atmosphere.

As illustrated by FIGS. **1** and **2** in combination, a measuring tank **34** is provided adjacent a control station **32** on tending truck **10**, and is connected thereto by conduits **36** and **37**. Control station **32** is provided with a plurality of handles **38** which allow any one of the chemical supply containers **22–24** to be placed in communication with the measuring tank **34** by way of conduits **36** or **37**. For reasons which will become apparent hereinafter, only one lever **38** is actuated at any one time so that only one of the liquid chemical containers **22–24** is communicated with measuring tank **34** at one time.

A conduit **40** is provided which leads from the top of measuring tank **34** through valve **41** to the intake manifold of the engine on sprayer tending truck **10**. When the engine of the tending truck is running, valve **41** is opened and a partial vacuum will be drawn on conduit **40** and measuring tank **34**. As a result of this vacuum, a liquid agricultural chemical will be drawn from one of the containers **22–24** and into measuring tank **34** depending on which lever **38** on control station **32** is actuated. As containers **22–24** are emptied, air is

drawn into the containers through vents **35** connected to an intake **39** remote from the operator's station.

Several of the liquid chemicals contained in containers **22–24** are sequentially drawn into measuring tank **34** in preselected proportions. Measuring tank **34** is provided with a sight tube **42** which indicates the amount of liquid contained in the measuring tank. Operator **16** watches sight tube **42** as he manipulates the levers **38** on control station **32** to draw the preselected amounts of liquid chemicals into measuring tank **34.** The chemicals in tank **34** are allowed to accumulate to provide the desired chemical quantities.

One of the liquid chemical containers **22–24** is provided with a surfactant which acts as a chemical flushing and rinsing agent. After the desired liquid chemicals have been drawn into mixing tank **34,** a quantity of surfactant is drawn into the measuring tank. It is desired that the surfactant be connected with the remote ends of control station **32** so that the surfactant flushes the entire system to minimize corrosion and decrease the amount of concentrated liquid chemicals remaining in the system in the event of a mechanical failure.

After the desired chemicals and surfactant have been drawn into measuring tank **34,** the mixture is ready to be transferred to off loaded sprayer tending truck **14'.** Umbilical **18** is connected through pump **84** and induction manifold **80** with a conduit **44** connected to the bottom of measuring tank **34.** Valve **46** is opened along with vent **48** controlled by valve **49** to break the vacuum in measuring tank **34** and allow the chemical mixture to flow into conduit **44.** In conduit **44,** the concentrated liquid chemical mixture is mixed in a stream of water from storage tank **20** at induction manifold **80,** as illustrated in more detail hereinafter, to dilute the chemical mixture. The dilute chemical mixture is pumped through umbilical **18** to sealed storage tanks **50, 51** on off loaded rig **14'.**

As the liquid chemical mixture from measuring tank **34** is transferred to off loaded tractor sprayer rig **14',** it may be desirable to add powdered chemicals as well. Such powdered chemicals are ordinarily not toxic, and thus special handling is not required. The chemicals are placed in a powder box **52** through a preferably watertight door **54** which is then closed and sealed. A portion of the water from storage tank **20** is circulated through powder box **52** by lines **56, 57.** The powder is thus mixed or suspended in the water, and the water containing both the mixed powdered chemicals and the dilute liquid chemical mixture passes through umbilical **18** to storage tanks **50, 51** on off loaded spraying tractor rig **14'.** Any spill at the connection of the umbilical to the service truck is collected in pan **59** and returned to powder box **52.**

After storage tanks **50, 51** which are interconnected on off loaded tractor spraying rig **14'** are full, further passage of water or chemicals through umbilical **18** is terminated, as illustrated in more detail hereinafter. Umbilical **18** is disconnected from tractor spraying rig **14'** and the dilute chemical mixture sprayed as desired. Sprayer tending truck **10** ordinarily contains sufficient concentrated chemicals and dilutant water to resupply tractor spraying rig **14** several times throughout the night.

CONTROL AND MEASURING STATION

The control station **32** on sprayer tending truck **20** is illustrated in more detail by way of reference to FIGS. **3** and **4** in combination. Liquid chemical containers **22–24** are connected to at least one of two manifold pipes **60, 61** by conduits such as **29, 30.** In the example here shown two manifold pipes **60, 61** include a plurality of inlet stations such as **62–65** corresponding with individual liquid chemical containers. Each inlet station **62–64** is provided with a valve **66–69** operated by one of the handles **38** on control panel **32.**

Manifold pipes **60, 61** are connected to conduits **36, 37** leading to the interior of measuring tank **34.** As discussed hereinabove, the chemicals are drawn into the interior of measuring tank **34** as illustrated by arrow **70** in sequence by manipulating levers **38** controlling valves such as **66–69.** The liquid chemicals are drawn into measuring tank **34** one at a time in preselected amounts as indicated by calibrated sight tube **42** until the desired concentrated liquid chemical mixture is obtained. The surfactant is connected to the remote inlet stations **72, 73** of manifold pipes **60, 61** respectively. After the desired liquid chemical mixture has been obtained, the surfactant is drawn through the system, including the entire length of manifold pipes **60, 61** and conduit **36,** to flush the system.

It should be noted that any remaining liquid in the system can be drained by opening valve **74.** Such liquid remaining in the system should be sufficiently diluted by surfactant so as to be nontoxic and can be disposed of at designated dumping sites.

A conduit **76** is connected to water storage tank **20** and terminates at a coupling **78** adapted to be connected to the umbilical illustrated in FIG. **1.** Conduit **76** is provided with a induction manifold section **80.** Conduit **44** emanating from the dump valve **46** at the bottom of measuring tank **34** is connected to induction manifold **80.**

Water from storage tank **20** is pumped through conduit **76** and into the umbilical leading to the tractor spraying rig by pump **84** to extract and dilute the chemical mixture in measuring tank **34** and transfer it to spraying rig **14'.** Valve **86** is open for this purpose. As the water is being pumped, induction manifold **80** will draw a partial vacuum on conduit **44.** Dump valve **46** is opened together with air vent **48** so that the concentrated liquid chemicals in measuring tank **34** are drawn through conduit **44** under a partial vacuum and entrained in the water flowing through conduit **76** and onto the tractor spraying rig.

As is apparent in viewing FIG. **3,** line **56** leading to the powder box **52** illustrated in FIG. **2** is connected to conduit **76** downstream of pump **84.** When valve **88** is opened, water will be pumped into the powder box and circulated therethrough to entrain powdered chemicals contained therein into the liquid transfer system. The water containing the powdered chemicals is returned to conduit **76** through line **57.** Line **57** is communicated to the induction manifold **80** to draw the water containing the wetable powder back to conduit **76** and to the tractor spraying rig.

Tractor Spraying Rig Spray Tanks

One spray tank **50** on the tractor spraying rig is illustrated by way of reference to FIGS. **5** and **6** in combination. Spray tank **51** on the tractor spraying rig is similar and has similar features. Spray tanks **50, 51** which are interconnected are filled with the dilute chemical mixture to load the tractor spraying rig.

Umbilical **18** is connected to a conduit **90** leading to the interior of one of the spray tanks by releasable coupling **92.** As the water containing the dilute chemi-

cal mixture is being loaded in the spray tank by umbilical **18**, the air and other fumes in tank **50** are vented through a tube **94** which leads downwardly from an outlet **96** at the top of the tank to a position near the ground. The fumes and any possible liquid overflow are far less toxic at this stage because they are now diluted, but the venting of such fumes and any possible overflow onto the ground rather than at the top of the tank further minimizes the safety hazard to the operator.

Spray tank **50** is sealed with the exception of vent tube **94.** Consequently, a float **98** is provided which is connected to a valve **100** at the downstream end of conduit **90.** When the level of the liquid in spray tank **50** reaches a predetermined level, float **98** actuates valve **100** to terminate the flow of such liquid to the tank. Pump **84** illustrated in FIG. **3** is of a non-positive displacement type, here shown as a centrifugal pump, so that termination of the liquid flow at the far end of the umbilical will not damage the pump. After termination of the liquid flow, pump **84** is turned off by the operator.

Operation

The operation of the present invention is best illustrated by way of reference to the schematic view of FIG. **7.** A plurality of containers **22–24** of concentrated liquid agricultural chemicals are connected to various inlet stations on manifold pipes **60, 61** by conduits **28–30.** A quantity of surfactant in containers such as **110, 111** is connected to the remote inlet stations **72, 73** by two separate conduits **112, 113.** Manifold pipes **60, 61** are connected to conduits **36, 37** leading to the top of mixing tank **34.**

The liquid chemicals in containers **22–24** are drawn in series through one or the other of manifold pipes **60, 61,** through conduits **36, 37** and into measuring tank **34.** The particular liquid chemical being drawn into the measuring tank at any one time is controlled by valves such as **66–69,** and the operator watches the calibrated sight tube **42** to obtain the right proportions. Surfactant is then drawn through the system from containers **110, 111** to flush manifold pipes **60, 61** and conduits **36, 37.**

In order to draw the chemicals and surfactant into measuring tank **34,** a partial vacuum is applied by connecting conduit **40** to the intake manifold **114** of the internal combustion engine which powers the sprayer tending truck and opening valve **41.** A trap **116** is interposed in conduit **40** to trap particulate or liquid matter passing through the conduit to prevent it from reaching intake manifold **114.** Preferably, provision is made to shut down the engine in the event the trap becomes full.

The gasses drawn from measuring tank **34** through conduit **40** include highly toxic fumes of the concentrated chemicals. These vapors pass into intake manifold **114** and thereafter into the combustion chambers of the engine. In the combustion chambers they are either combusted or subjected to high temperatures and pressures and shock fronts which render the chemical fumes substantially nontoxic.

It has been found that in internal combustion engines which are operated on propane, as opposed to gasoline, the combustion temperature in the engine is substantially higher than that achieved in a gasoline powered engine. As a result, detoxification of the chemical fumes is improved and it is therefore desirable to employ such an engine in the apparatus of the present invention. Even when a gaoline engine is used, the fumes are rendered substantially nontoxic and can be vented to the atmosphere through the vehicle exhaust.

After the desired concentrated liquid chemicals and the surfactant have been drawn into measuring tank **34,** dump valve **46** and vent valve **49** are opened to release the vacuum. Water is pumped by pump **84** from storage tank **20** through umbilical **18** and to one of the spray tanks such as **50** on the tractor spraying rig. Conduit **44** emanating from dump valve **46** is connected to induction manifold **80** to draw the concentrated liquid chemicals into the water stream under partial vacuum and dilute them. Powdered chemicals can also be added by placing such chemicals in powder box **52** and cycling water through the powder box by way of lines **56, 57.** Water containing the suspended powdered chemicals is also introduced to induction manifold **80** and is entrained in the water stream. When spray tank **50** on the tractor spraying rig is filled, float **98** actuates a valve **100** to terminate the flow of further liquid to the tank.

It is to be appreciated that the liquid chemicals in their concentrated form, and the fumes or vapors from such concentrated liquid chemicals, are highly toxic. After the chemicals are diluted, the diluted chemicals and their fumes are far less toxic. However, with the apparatus of the present invention, all of the handling of the liquid chemicals in their concentrated state is accomplished at less than atmospheric pressure. Not only is the drawing of the liquid chemicals into the measuring tank **34** accomplished at less than atmospheric pressure, but the introduction of the mixed chemicals in their concentrated state into the water stream is also accomplished in this manner. As a result, the likelihood of the concentrated liquid chemicals and their vapors escaping to the atmosphere is substantially reduced over positive pressure systems. The chemical fumes which are drawn from the system to provide the partial vacuum are fed to the combustion chambers of the internal combustion engine and rendered nontoxic. It is only after the liquid chemicals have been diluted that positive pressure is applied, e.g. by pump **84.**

While a preferred embodiment of the present invention has been illustrated in detail, it is apparent that modifications and adaptations of that embodiment will occur to those skilled in the art. For example, the vacuum could be provided by an auxilliary engine rather than the engine that provides the motive power for the tending truck. However, it is to be expressly understood that such modifications and adaptations are within the spirit and scope of the present invention, as set forth in the following claims.

I claim:

1. A closed method of measuring, batching and mixing agricultural chemicals at a vehicle such as sprayer tending truck provided with an internal combustion engine, said method comprising the steps of drawing a vacuum on a measuring tank by providing a fluid connection between the measuring tank and the intake manifold of the internal combustion engine as said engine is running so as to draw the gaseous content of the measuring tank into said engine; providing a plurality of discrete liquid agricultural chemical supplies; and serially fluidly connecting at least several of the plurality of liquid chemical supplies to the measuring tank to draw preselected amounts of such chemicals in sequence into the measuring tank at less than atmospheric pressure to accumulate the chemicals in said tank and render the vapors produced by said chemicals in the tank substantially nontoxic by subjecting said

vapors to combustion in the internal combustion engine.

2. A method as recited in claim 1 and additionally comprising the steps of drawing the accumulated chemicals from the measuring tank and into a flowing stream of water, and transferring the chemicals in said flowing stream of water to a spraying tractor.

3. A method as recited in claim 1 wherein said serially fluidly connecting step comprises serially fluidly connecting a plurality of the liquid chemical supplies to a manifold in fluid connection with the measuring tank, and additionally comprising the step of flushing the manifold by drawing a preselected amount of surfactant through said manifold subsequent to said serially fluidly connecting step.

4. A method as recited in claim 1 wherein said fluid connection providing step comprises the step of providing a fluid connection between the measuring tank and the intake manifold of the internal combustion engine comprising the motive power source of the sprayer tending truck.

5. A closed agricultural chemical batching, measuring and mixing system with a vehicle such as a sprayer tending truck provided with an internal combustion engine, said system comprising a measuring tank; gauge means for indicating the amount of liquid in the measuring tank; a plurality of liquid chemical supply containers each containing a liquid chemical; means for providing fluid communication between each of the liquid chemical supply containers and the measuring tank; valve means interposed in the providing means and adapted to control the flow of liquid chemicals from each of the liquid chemical supply containers to the measuring tank; and means for connecting the measuring tank to the intake manifold of the internal combustion engine to create a partial vacuum in the measuring tank and thereby draw preselected amounts of the selected chemicals controlled by the valve means in sequence from the containers and into the measuring tank and simultaneously render the chemical vapors formed in the measuring tank substantially nontoxic in the internal combustion engine.

6. A system as recited in claim 5 and additionally comprising a manifold in fluid communication with the measuring tank, and wherein the providing means comprises means for providing individual communication between each of the liquid chemical supply containers and said manifold.

7. A system as recited in claim 5 wherein one of the liquid chemicals comprises a surfactant, and wherein the fluidly connecting means includes means for fluidly connecting the measuring tank to the container containing the surfactant subsequent to the other selected chemicals to flush said fluidly connecting means.

8. A system as recited in claim 5 wherein said measuring tank includes a dump valve at the bottom thereof for introducing the chemicals into a water stream for conveyance of the mixed chemicals in the water stream to a spraying tractor.

9. A system as recited in claim 5 wherein the gauge means comprises a sight tube.

10. A system as recited in claim 5 wherein the internal combustion engine comprises the motive power source of the sprayer tending truck.

11. A system as recited in claim 5 wherein the internal combustion engine comprises a propane engine.

12. A system as recited in claim 5 wherein the system is mounted on said vehicle.

13. A closed method of batching, measuring and mixing agricultural chemicals at a vehicle such as a sprayer tending truck provided with an internal combustion engine for motive power, said method comprising the steps of drawing a vacuum on a measuring tank by providing a connection between the measuring tank and the intake manifold of the internal combustion engine as said engine is running so as to draw the gaseous content of the measuring tank into said engine; providing a plurality of discrete liquid agricultural chemical supplies; serially connecting the plurality of liquid chemical supplies to a valve controlled manifold system; fluidly connecting the manifold system to the measuring tank; and manipulating the valve controlled manifold system to sequentially provide fluid communication between at least several of the plurality of liquid chemical supplies and the measuring tank to draw preselected amounts of such chemicals in sequence into the measuring tank at less than atmospheric pressure to measure the chemicals in said tank and render the vapors produced by said chemicals in the tank substantially nontoxic by subjecting said vapors to combustion in the internal combustion engine.

14. A method as recited in claim 13 and additionally comprising the step of flushing the manifold system by drawing a preselected amount of surfactant through said manifold system subsequent to said manipulating step.

15. A method as recited in claim 13 and additionally comprising the step of transferring the mixed chemicals from the measuring tank to the storage tank of a tractor spraying rig by providing fluid communication from the measuring tank to an induction manifold, and pumping water through the induction manifold and to the spray tank of a tractor spraying rig so as to draw the mixed chemicals into and entrain the chemicals in the water being pumped.

16. A closed agricultural chemical batching and mixing system mounted on a vehicle such as a sprayer tending truck having an internal combustion engine for motive power, said system comprising a measuring tank; gauge means for indicating the amount of liquid in the measuring tank; a plurality of liquid chemical supply containers, each containing a liquid chemical; a valve controlled manifold system in fluid communcation with each of the liquid chemical supply containers and the measuring tank to control the flow of liquid chemicals from each of the liquid chemical supply containers to the measuring tank; means for fluidly connecting the measuring tank to the intake manifold of the internal combustion engine to create a partial vacuum in the measuring tank and thereby draw preselected amounts of the selected chemicals in sequence from the containers and through the valve controlled manifold system and into the measuring tank and simultaneously render the chemical vapors formed in the measuring tank substantially nontoxic by subjecting them to combustion in the internal combustion engine; a water conduit for dilutant water having an intermediate induction manifold section; and a dump valve controlled conduit providing fluid communication between the bottom of the measuring tank and the induction manifold section to allow the mixed chemicals to be drawn into and entrained in the water passing through the water conduit for transfer of said mixed chemicals to a spray tank on a tractor spraying rig.

17. A system as recited in claim 16 wherein the water conduit is connectable to the spray tank of the tractor

spraying rig and includes a pump for pumping water through the water conduit, and wherein the end of the conduit at said spray tank includes a float actuated control valve for terminating the flow of the dilutant water containing the entrained chemicals to said spray tank when the level of said water in said spray tank reaches a predetermined level.

18. A system as recited in claim **17** and additionally comprising a powder box having a door for insertion of powdered chemicals into said box, a first conduit connected to the water conduit downstream of the pump to communicate at least a portion of said water to the powder box, and a second conduit from the powder box to the water conduit upstream of said pump so that a portion of the dilutant water passing through the dilutant water conduit is circulated through the powder box to introduce or suspend the powdered chemicals therein and back into the water supply conduit.

* * * * *

49471

MWPS-37

Designing Facilities for Pesticide and Fertilizer Containment

First Edition, 1991

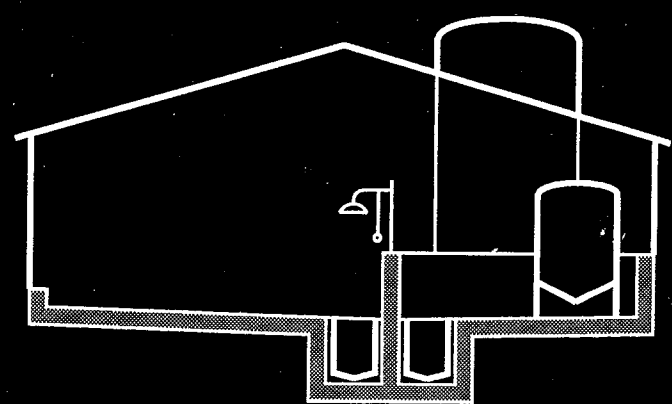

Acknowledgements

MWPS Pesticide & Chemical Storage Committee

This handbook was prepared under the direction of the Pesticide and Chemical Storage subcommittee of the MidWest Plan Service:

D.W. Kammel, Chair, University of Wisconsin
R.T. Noyes, Oklahoma State University
G.L. Riskowski, University of Illinois
V.L. Hofman, North Dakota State University

Its development was supported, in part, by the Tennessee Valley Authority, National Fertilizer and Environmental Research Center, Muscle Shoals AL 35660-1010, and by the Illinois Department of Agriculture, Springfield IL 62794-9281.

In addition, MWPS would like to thank the many people throughout the nation who devoted time and energy to review the contents of this handbook.

MWPS Headquarters

G.A. Church II, Manager
F.W. Koenig, Plan Service Engineer
C.J. Huffman, Part-time Editor
N.M. Wheeler, Computer Information Systems Specialist
G.L. Roys, Illustrator
D.J. Junod, Secretary

MWPS-37
First Edition, 1st Printing, 12M, 1991
2nd Printing, 5M, 1993

Copyright © 1991, MidWest Plan Service,
Iowa State University, Ames, Iowa 50011-3080
Rights negotiable, inquiry invited.
(515) 294-4337

Library of Congress Cataloging in Publication Data

Designing facilities for pesticide and fertilizer containment / David W. Kammel ... [et al.]. — 1st ed.
"MWPS-37."
Includes index.
ISBN 0-89373-083-1 (pbk.)
1. Warehouses—Design and construction. 2. Pesticides—Storage. 3. Fertilizers—Storage. 4. Pesticides—Safety measures. 5. Fertilizers—Safety measures. I. Kammel, David William. II. MidWest Plan Service.
TH4499.D47 1991
690'.535—dc20 91-26938
CIP
r91

MWPS Committee

The MidWest Plan Service prepares publications under the direction of agricultural engineers and consulting specialists. It is an official activity of the following universities and the U.S. Department of Agriculture. The MidWest Plan Service Committee is responsible for the selection and supervision of all projects:

A.J. Muehling; G.L. Riskowski
University of Illinois, Urbana IL 61801
D.D. Jones
Purdue University, West Lafayette IN 47907
V.M. Meyer; D.S. Bundy
Iowa State University, Ames IA 50011
J.P. Murphy; A.J. Heber
Kansas State University, Manhattan KS 66506
W.G. Bickert; T.L. Loudon
Michigan State University, East Lansing MI 48824
L.D. Jacobson; K.A. Janni
University of Minnesota, St. Paul MN 55108
D.L. Williams; N.F. Meador
University of Missouri, Columbia MO 65211
D.N. Sasseville
Lincoln University, Jefferson City MO 65101
G.R. Bodman; D. Jones
University of Nebraska, Lincoln NE 68583
K.J. Hellevang; L.F. Backer
North Dakota State University, Fargo ND 58105
M.A. Veenhuizen; H.M. Keener
The Ohio State University, Columbus OH 43210
S.H. Pohl; G.A. Anderson
South Dakota State University, Brookings SD 57006
D.W. Kammel; D.R. Bohnhoff
University of Wisconsin, Madison WI 53706
L.G. Hahn
USDA
W.L. Harris
USDA-CRS

For additional copies of this book or other publications referred to, write to: **Extension Agricultural Engineer** at any of the above institutions.

...And Justice for All.

MidWest Plan Service publications are available to all potential clientele without regard to race, color, sex, or national origin. Anyone who feels discriminated against should send a complaint within 180 days to the Secretary of Agriculture, Washington, DC 20250. We are an equal opportunity employer.

MWPS-37

Designing Facilities for Pesticide and Fertilizer Containment

David W. Kammel

Ronald T. Noyes

Gerald L. Riskowski

Vernon L. Hofman

MidWest Plan Service
Agricultural and Biosystems Engineering Department
122 Davidson Hall
Iowa State University
Ames IA 50011-3080

Disclaimer

Neither MidWest Plan Service nor any of the cooperating land-grant universities, or their respective agents or employees, have made, and do not hereby make, any representation, warranty or covenant with respect to the specifications, information, and recommendations in this handbook, or the results generated by their use, nor will they be liable for any damages, losses, or claims, including those of an incidental or consequential nature, arising out of the use or inability to use this handbook.

Use of trade names implies neither endorsement of products by the authors, nor criticism of similar ones not mentioned.

TABLE OF CONTENTS

1 1. FACILITIES OVERVIEW
- 1 Introduction

3 2. LAWS
- 3 Federal Agencies and Laws
- 4 State Actions

5 3. SITE SELECTION
- 5 Environmental Assessment
- 5 Existing Site
- 5 New Site
- 5 Facility Site Plan
- 7 Remodeling Existing Facilities

9 4. FUNCTIONAL SYSTEM DESIGN
- 9 Worker Safety
- 9 Storage for Pesticides or Fertilizers
- 9 Secondary Containment
- 9 Mixing/Loading Area
- 10 Waste Disposal Area
- 10 Example Facilities
  - Small Scale Facility
  - Medium Scale Facility
  - Large Scale Facility
  - Aerial Applicator Facility
  - Experimental Farm Facility

16 5. WORKER SAFETY AREA
- 16 Safety Equipment
- 16 Personal Protection Equipment
- 17 Cleaning Contaminated Clothing
- 17 Safety Training

18 6. PESTICIDE AND FERTILIZER STORAGES
- 18 Pesticide Storage and Safety
- 18 Packaged Product Pesticide Storage
- 18 Planning and Layout
  - Security
  - Management
  - Siting and Setbacks
- 19 Building Design and Construction
- 20 General Construction
  - Floor and Wall Surfaces
  - Secondary Containment
- 20 Fire Safety Design
  - Codes and Regulations
  - Code Compliance
  - Area Classification
  - Building Use Classification
  - Classification of Liquids
    - Flammable liquid
    - Combustible liquid
  - Explosion Venting
- 21 Storage Areas
  - Storage Container Size
  - Pesticide Storage
  - Storage Cabinets
  - Fire Rated Construction
  - Door Construction
  - Separate Inside Storage
  - General Purpose Warehouse Storage
  - Warehouse for Liquid Product Storage
  - Portable Storage Lockers
  - Mixing/Loading Area
- 24 Electrical Design
  - Area Classification
  - Degrees of Hazard—Division Classification
- 25 Classification of Storage Areas
- 25 Explosion-Proof Electrical Systems
- 25 Sources of Ignition
- 25 Fire Safety
- 26 Fire Suppression
- 26 Natural Ventilation
- 26 Mechanical Ventilation
  - Mechanical Ventilation Rates
- 27 Air Inlets
- 27 Heated Storage
- 27 Liquid Fertilizer Storage and Handling
- 27 Impregnation of Pesticides on Dry Fertilizer

29 7. SECONDARY CONTAINMENT
- 29 Functional Containment Design Considerations
  - Frost Heaving
  - Tank Seats
  - Tank Anchoring
  - Containment Wall Height
  - Storage Tank Plumbing
  - Electrical Systems
  - Fencing
- 35 Sizing
  - Calculation of Secondary Containment Size
    - Vertical tanks only
    - Non-vertical or elevated tanks
- 40 Methods of Secondary Containment
  - Curbed Areas
  - Double Tanks
  - Concrete Wall and Floor Containment
  - Steel Floors and Walls
  - Fiberglass or Plastic Walls and Floors
  - Asphalt Floors—Fertilizer Only
  - Synthetic Liners—Fertilizer Only
  - Earthen Dikes—Fertilizer Only
    - Earthen dike design
    - Earthen dike sizing
    - Liners for earthen containments
  - Synthetic Liners

47 8. MIXING/LOADING FACILITIES AND EQUIPMENT
- 47 Facility Planning and Layout
- 48 Mixing/Loading Pad Layout
- 48 Functional Organization
- 48 Single Sump Concrete Mixing/Loading Pad Facility
- 48 Sumps and Drainage

51 Sump Designs
51 Mixing/Loading Equipment Area
Pumps and Pump Containment
Plumbing Components and Seals
Valves
Rinsate Storage and Handling
Closed Mixing Systems—CMS
Venturi injectors
Metering tanks
Rinsing probes/internal probes
Refillable bulk containers
Mechanical Transfer/Open Mixing Systems
Pesticide measurement
Container Rinsing for Disposal
Rinsate Storage Tanks
Water Supply Tanks
Backflow Prevention Devices
Alternative Mixing/Loading Facilities
Temporary/transportable synthetic facilities
Bulk Unloading Facility

61 9. CONCRETE

61 Soils
61 Subgrades
Subgrade Preparation
Expansive soils
Hard and soft spots
Backfill
Frost heaving
62 Subbases
Vapor Barrier
62 Concrete Quality
62 Concrete Specifications
Minimum Cement Content
Maximum Size Coarse Aggregate
Slump
Entrained Air
Admixtures
Chemical Resistance and Durability
Curing Concrete
Cracks in Concrete
Jointing Practice
66 Concrete Structural Design
Secondary Containment Floors and Walls
Mixing/Loading Pad
Bulk Unloading Facility

79 10. EMERGENCY RESPONSE PLANNING

79 Laws
79 Reporting Requirements
79 Emergency Response Plan
80 Employee Training
80 Pesticide Fires
80 Spill Reporting
80 Record Keeping
80 Spill Response
82 Transporting Pesticides

83 11. RINSATE MANAGEMENT AND WASTE DISPOSAL

83 Waste Reduction Practices
84 Rinsates
84 Rinsate Management
Rinsate Segregation
Field Washing
Minimizing Contaminated Surface Area
86 Wastes
88 Disposing Pesticide Waste
Incineration
Rinsate Recycling System
Landfill
Evaporation Pads
89 Experimental Disposal Options
Evaporation Pits (Biological Digester)
Biodegradation Disposal System
90 Disposing Pesticide Containers

91 12. MAINTENANCE OF FACILITIES

91 Preventive Maintenance
91 Routine Inspection
91 Drainage
91 Good Housekeeping
91 Plumbing
91 Steel Corrosion
92 Concrete Deterioration
92 Protective Treatments
Concrete Surface Preparation
Protective Coatings
Boiled linseed oil and mineral spirits
Epoxy
Urethane
Polyester and vinylester
Polyureas
Vinyls
Chlorosulfonated polyethylene
Hydraulic cements
94 Concrete Repairs
94 Evaluation of Repair Method
94 Cracks in Concrete
94 Crack Repair
Routing and Sealing
Epoxy Injection
Chemical Grouting
Drypack Mortar

96 DIRECTORY OF APPENDICES

115 INDEX

1. FACILITIES OVERVIEW[1]

Introduction

Agricultural pesticide and fertilizer storage and handling sites represent high risks for point source contamination of surface water and groundwater because of the concentration, quantity and type of products at the site. Federal and state legislatures are increasingly active in establishing agricultural pesticide and fertilizer use policies to protect air, water and soil quality, as well as human health and wildlife. Some states require properly designed facilities for farm and commercial operations handling **any** amount of pesticide.

This handbook is a compilation of the best information available at the time of publication regarding design of facilities for storing, handling and using agricultural pesticides and fertilizers. But the agricultural pesticide and fertilizer industry is ever-changing with new technology, new information, new products, new laws and regulations—and new questions.

Designing Facilities for Pesticide and Fertilizer Containment, MWPS-37, is intended to be a desk reference that provides **recommendations** based on accepted engineering principles and practices. These recommendations are necessarily conservative because the national circulation of this book precludes situation-specific design. A professional engineer can use MWPS recommendations and adjust them to an individual case. Likewise, these recommendations are not to be construed as **standards**. Engineering societies and other construction-related associations develop standards; federal, state and local government agencies adopt and enforce standards. In most cases, MWPS recommendations exceed standards.

As an educational resource, this handbook provides a common foundation of knowledge, encourages consistency in design and offers guidelines and some solutions to common problems. Ultimately, however, it is each individual's responsibility to make informed choices that are mindful that safety of individuals and the environment is the foremost concern.

Always check with local authorities for information on laws and regulations to which you are obligated. Seek counsel of professional engineers when selecting sites and constructing facilities. Keep abreast of current issues and information. When used responsibly, pesticides and fertilizers are assets to production agriculture, but when used indiscriminately, without respect for their inherent toxic nature, they can be destructive to people, animals, land and water.

Fertilizer and pesticide facilities include storage buildings, as well as sites where products are unloaded, handled, mixed and loaded into application equipment or transport vehicles, and where equipment is cleaned and stored. There are a broad range and variety of facilities. Farmers may store pesticides and fertilizers in a cabinet, then mix products and load sprayers on concrete shop or machine shed floors. Individual commercial aerial and ground pesticide applicators may have pesticide and fertilizer storage and a mixing/loading pad in a single building. Large commercial applicators or dealers may use a warehouse for packaged product, a secondary containment dike for bulk liquid products, and a separate mixing/loading pad. All users need well designed, coordinated and efficient systems for storing and handling pesticides and fertilizers that provide adequate worker and environmental safety.

Properly designed facilities promote storage, handling and disposal practices that enhance worker safety and minimize the risk of point source contamination. An ideal facility incorporates safety features in all aspects of its design and provides:

- Secure, dry storage of pesticides separate from fertilizers.
- Secondary containment of day to day spills resulting from normal mixing/loading operations.
- Secondary containment of large, accidental spills or leaks (separate secondary containment for pesticides and fertilizers).
- Facilities for collecting, storing and recycling excess spray solutions and rinsates.
- A dry, secure, well managed area for storing empty containers and other waste prior to proper disposal.

---

1 David W. Kammel, Agricultural Engineering Department, University of Wisconsin Cooperative Extension, Madison.

- Office facilities for effective management and communications.
- Orderly, accessible storage for personal protection equipment (PPE) and emergency supplies.
- Worker convenience facilities: first-aid and training areas, restrooms, shower(s), laundry.

In an effort to protect soil, surface water and groundwater, many states are enacting legislation regarding facility design at sites that store and handle pesticides and fertilizers. Some states require plan approval before construction; others require inspection after construction.

Proper facility design reduces the risk of potential contamination from normal handling practices and accidents by preventing the movement of pesticides and fertilizers to surface water and groundwater. The capital investment for facilities can be high. Proper planning and use of accepted engineering guidelines and modular predesigned plan sets provide facilities that protect workers and the environment to the extent that proper management and handling procedures are implemented.

2. LAWS[2]

Federal laws set the national tone for minimum requirements. Simply put, laws state goals and objectives and then give authority to government agencies to implement and enforce the law with detailed regulations. There are three primary federal agencies that deal with agricultural pesticides and fertilizers: Environmental Protection Agency (EPA), Occupational Safety and Health Administration (OSHA) and Department of Transportation (DOT).

State and local governments can cite federal laws and regulations or enact their own, more stringent requirements. Always check with local authorities for regulations governing each site. In the absence of state/local regulations, federal laws/regulations have jurisdiction. In addition, a variety of building codes are cited for the construction of safe facilities, Appendix A.

Federal Agencies and Laws

Following is a summary of major federal agencies and laws that establish the framework for rules, regulations and requirements regarding how pesticides and fertilizers are stored and handled to reduce risks associated with facilities and practices.

National environmental laws give the U.S. EPA authority to maintain and improve land, air and water quality. EPA creates and implements rules and regulations to deal with issues such as air and water pollution, safe drinking water, solid and hazardous waste management, radiation, toxic substances and pesticides.

Federal Insecticide, Fungicide, and Rodenticide Act (FIFRA), 1970, amended 1988. This act seeks to protect humans and the environment by providing for the controlled use of pesticides. It includes registration, classification, labeling, distribution, use, user categories and certification. FIFRA makes it illegal to use a registered pesticide in a manner inconsistent with its labeling. The EPA is drafting regulations on pesticide storage, pesticide waste disposal, rinse water management, secondary containment for bulk storage and containment for mixing/loading operations. The intent of these new regulations is to develop minimum federal performance standards that encourage good storage and handling practices.

Resource Conservation Recovery Act (RCRA), 1976. This act addresses solid and hazardous waste management. It includes generating, transporting, storing, treating and disposing waste that may pose a threat to human life, health or the environment.

Clean Air Act (CAA), 1990. This act regulates stationary and mobile sources of air pollution including dusts, vapors and fumes from pesticide and fertilizer plants. The **Clean Water Act** (CWA), 1990, and its amendments, address the discharges of point source and nonpoint source pollutants into surface water and groundwater. Spills and point source runoff that enter water from a facility are regulated under this act. The 1986 and 1987 amendments to the **Safe Drinking Water Act** (SDWA) emphasize the protection of drinking water supplies.

Comprehensive Environmental Response, Compensation and Liability Act (CERCLA), 1980. Often called "Superfund", this act allows the government to clean up a hazardous waste site and then seek reimbursement from responsible parties. This act also forever holds responsible the generator of waste if contamination ever occurred from a landfill or other site where waste is disposed.

Superfund Amendments and Reauthorization Act (SARA), 1986. Title III of SARA, known as the **Emergency Planning and Community Right-to-Know Act**, revises and expands the Superfund Act. It requires owners/operators of facilities to advise communities of the types and amounts of hazardous chemicals or pesticides used and stored at a site so a community can plan for emergency situations.

OSHA is responsible for worker safety in manufacturing, formulating and distributing operations in the pesticide industry. The **Worker Right-to-Know Law**, enacted in 1983, is administered by OSHA. It establishes mandatory guidelines for handling hazardous materials including pesticides. This includes the Hazardous Communication Standard which requires specific training of workers using hazardous materials.

OSHA Worker Right-to-Know Law and SARA Emergency Planning and Community Right-to-Know Law require that **Material Safety Data Sheets (MSDS)** be supplied with pesticides and fertilizers upon request. MSDS are available from the manufacturer for each pesticide and fertilizer and provide:

- Product ingredients.
- Chemical characteristics of active ingredients.
- Fire and explosion hazard information.
- Health data including effects of overexposure and first aid procedures.
- Protective measures for handlers such as gloves, dust masks, goggles or respirators.
- Environmental data including waste and container disposal methods.
- Requirements for shipping.

2 David W. Kammel, Agricultural Engineering Department, University of Wisconsin Cooperative Extension, Madison.

Provisions in the CWA and SDWA link these laws to provisions in RCRA, CERCLA, and FIFRA. This federal legislative package is, in part, driving states to respond with their own legislation. The EPA oversees and guides state environmental programs. State laws and regulations can be equal to or more stringent than federal laws and regulations but not less stringent. Appendix F is a list of EPA regional offices.

The U.S. DOT regulates the transportation of hazardous material within the U.S. by all modes of transportation. DOT regulations deal with shipping documents, driver licensing, training and record keeping, labeling and placarding and liability insurance requirements. The DOT *Emergency Response Guidebook* (DOT P5800.5), Appendix A, gives recommendations on transporting pesticides and fertilizers. The DOT Guidebook describes more than 3,000 chemicals by common and chemical name, is cross referenced according to chemical category and contains emergency response action procedures.

State Actions

As dealers, owners and farmers comply with regulations, they find much overlapping and interrelationship among the regulations and agencies. In addition to federal laws and regulations, state departments of agriculture often regulate anhydrous ammonia, fertilizers and the application of pesticides within the state. Some states have water resource boards or water quality agencies that interact with state health departments to monitor and analyze levels of trace chemicals in various water supplies within the state. The state environmental protection agency or water quality agency also interacts with other state agencies to coordinate environmental quality related regulations.

Some states have adopted a "performance standard" approach for requirements of facilities designed for groundwater and surface water protection. The facility design specified in the performance standard allows use of different options for storage and handling pesticides and fertilizers as long as they perform satisfactorily. Some states may require that plans be submitted prior to construction. Laws and regulations cover general facility requirements including:

- Storage guidelines for pesticides and fertilizer.
- Secondary containment for bulk liquid pesticide and fertilizer storage (containers larger than 55 gal).
- Secondary containment for operations involving loading, unloading, mixing, repackaging and application equipment washing.
- Secondary containment management and operating practices.
- Dry fertilizer impregnation operations.
- Backflow protection of public and private wells.
- Proper use and disposal practices of dry and liquid waste products and one way containers.

Always consult the state department of agriculture or other responsible agencies before designing pesticide and fertilizer storage, containment and handling systems. A list of state control officials is given in Appendix D.

Many state regulations were originally written to apply to commercial bulk pesticide and fertilizer facilities. However, over time these regulations have been revised to include both commercial and noncommercial facilities that store and handle pesticides and fertilizers in quantities exceeding a "threshold" amount. This threshold amount varies by specific product and from state to state.

Regulation compliance schedules are also set on an individual state basis. The schedule phases in the regulations for certain activities over a specified time period. Facilities are required to comply with certain conditions in the rules by specified dates. **NOTE:** Check with authorities of the resident state to determine the status of laws and compliance schedule for these types of facilities. Also check local and state building codes and local zoning requirements before construction. Appendix A lists associations and organizations to consult for codes, requirements and other help in the design and management of pesticide and fertilizer facilities.

3. SITE SELECTION[3]

Consider **human** and **environmental** safety before locating fertilizer or pesticide facilities. Assess the potential for environmental damage if air, groundwater and surface water are contaminated by a spill or fire. What are the risks to human safety in the event of an accidental spill or fire?

In locating a facility, determine proximity to populated areas. Consider the location in relationship to water supplies, prevailing winds and traffic patterns, and distances to local businesses, schools, residential areas and livestock farms. Determine the potential harm to these areas that could result from an accidental spill, contaminated runoff water from firefighting or contaminated smoke downwind from the site. Locate a storage/handling facility downwind and down-gradient from areas such as residential areas, sensitive groundwater supplies and surface water. Evacuation of the area around a facility after a major spill or fire must be planned and must be included in the emergency action plan. Many facilities have moved out of "downtown" to a more remote site to reduce the impact of an accidental spill or fire on the local community.

Environmental Assessment

An environmental assessment determines baseline information and suitability of a site. It is intended to detect the presence of contamination, if any, and the level and extent of contamination. Pre-existing contamination from previous poor practices or accidents can be found by:

- Searching records to obtain a history of the site.
- Sampling soil at and around the site.
- Sampling surface water and groundwater at the site and downstream from it.
- Visually inspecting the site.

If contamination is found, take more samples covering a larger area and with deeper soil probes to determine the extent, level and movement of contamination. In some cases, monitoring wells may be required. If no contamination exists, the site may be acceptable.

Check with the EPA or your state departments of agriculture, health and/or water quality for sampling requirements to establish baseline levels and other environmental assessment factors. Some states have approved quality assurance (QA) procedures. Data collected in any other manner may not be acceptable.

It is advisable to hire a professional consultant who is experienced in environmental assessments and whose credentials can be verified. Always check references. Ask professional consultants to explain in writing your state's requirements for sampling procedures and reports to be filed. Make sure the consultant plans to sample for chemicals that were likely handled or stored at the site. Select reputable professional laboratories to analyze and document soil and water samples.

Existing Site

Carefully evaluate an existing site to determine if it is suitable for pesticide and fertilizer storage and handling before building new facilities. Establish baseline values for environmental contaminants on the site before construction by testing soil, groundwater and surface water. If baseline values are not established and the site is found to be contaminated at a future date, it will be difficult, if not impossible, to determine if the contamination was a result of the old site or the new facilities.

New Site

Choose a new site based on the same concerns described above. An environmental assessment of the site is especially important before the purchase and transfer of any property. Conduct environmental assessments of the site before investing in a facility. Real estate transactions in some states now require an environmental assessment prior to finalizing the sale of the property. Such assessments are likely to be a requirement of the lending institutions. Individual farmers wishing to build a small facility and avoid the cost of an environmental assessment can do so by choosing a site that can be proven to have been in crop production only and never used for other purposes. Documentation from aerial photographs, ASCS records, etc. can be used. Do not use an undeveloped area because it may have been the site of uncontrolled disposal in the past. The property owner may be responsible for cleaning a site regardless of who is responsible for the contamination.

Facility Site Plan

Another part of environmental assessment is development of a facility site plan. Draw a sketch of the site on graph paper with an appropriate scale; include important surrounding areas such as business districts or residential areas. Professional consultants can provide this service in developing a well documented permanent plan and layout design.

An example site plan for a commercial facility is shown in Fig 1. Fig 2 shows a farm size facility site plan.

---

3 David W. Kammel, Agricultural Engineering Department, University of Wisconsin Cooperative Extension, Madison.

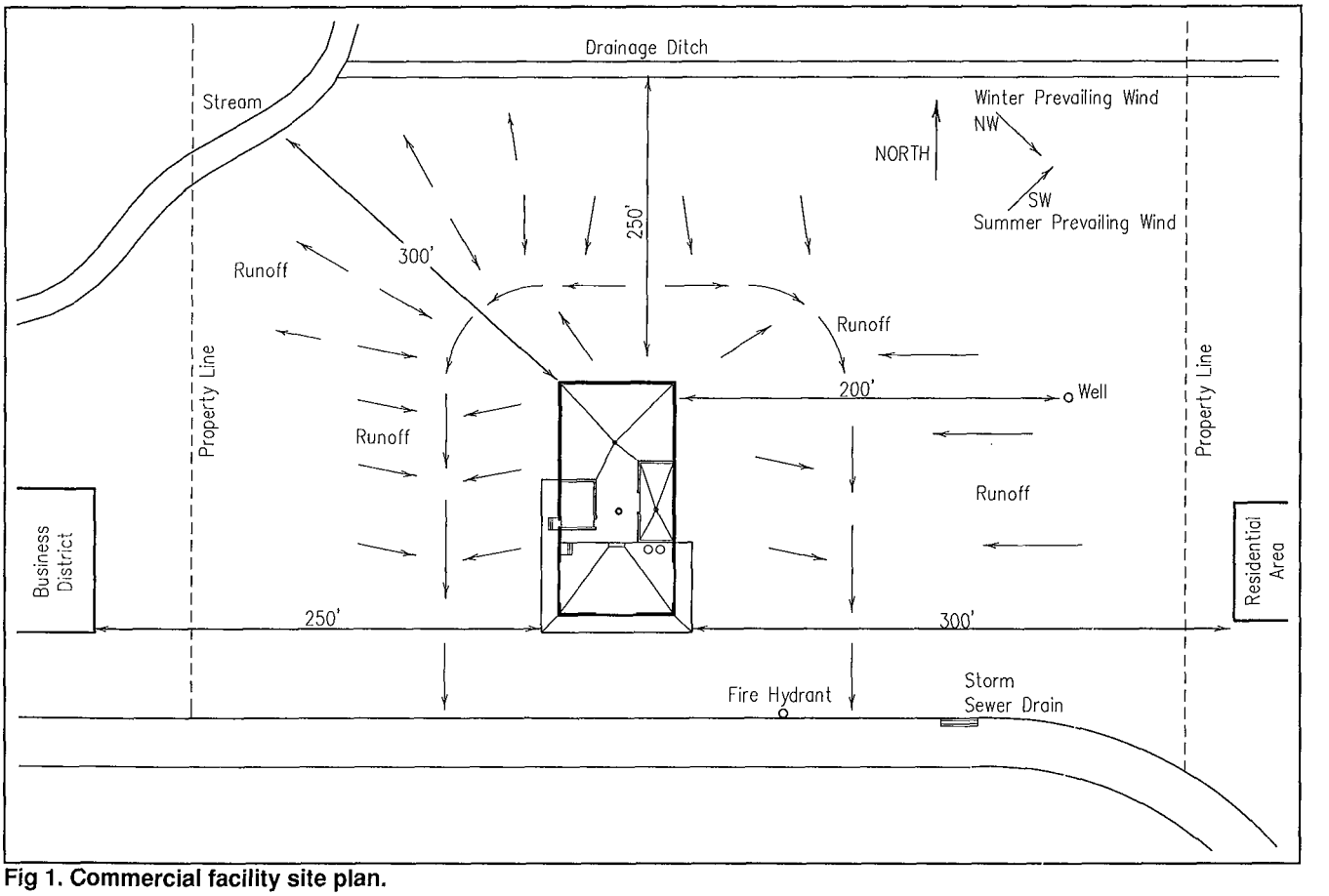

Fig 1. Commercial facility site plan.

Locate the following items accurately on a facility site plan:

- Underground fuel storage tanks, above-ground fuel storage tanks, L.P. tanks, pipelines.
- Public, private water wells.
- Fire hydrants, water lines, natural or L.P. gas lines.
- Main natural gas shutoff.
- Main electrical service lines, transformers, secondary lines, main electrical disconnect, service entrance.
- Surface water in ponds, creeks, rivers, water supply reservoirs.
- Sewer lines, septic tanks, sewage disposal/treatment fields, plus drainage pattern of site (topographic) including discharge of ditches, drainage ways, creeks.
- Pesticide storage containment area.
- Mixing/loading pad.
- Fertilizer storage containment area.
- Anhydrous storage area.
- Evaporation tanks.
- Flammable liquid storage.
- Access routes such as highways, roads, drives.
- Surrounding buildings.
- Fences, gates, roads.
- Property lines, easements.
- Prevailing wind directions for summer, winter, other predominant periods.
- North direction arrow.

There are very few guidelines on setback distances from areas around a pesticide storage area. A 100′ distance from a water source or well is used in many regulations, but there are no other generally used recommended distances. In general, the greater the distance, the lower the risk to adjacent areas in the event of a spill or fire. Identify and include the following dimensions or distances on the facility site plan:

- Distance to surface water such as rivers, lakes, ponds, public or private wells, creeks or drainage ways (100′ minimum).
- Distance to populated buildings either residential or business (200′ minimum).
- Distance to underground fuel storage tanks (50′ minimum).
- Distance to water table, aquifer or to a flood plain (varies with geological formations of area).
- Distance from surrounding buildings except other pesticide or fertilizer storage structures (50′ minimum).

NOTE: These are suggested minimum distances. Check each location for compliance with state and local regulations, zoning laws and/or building codes.

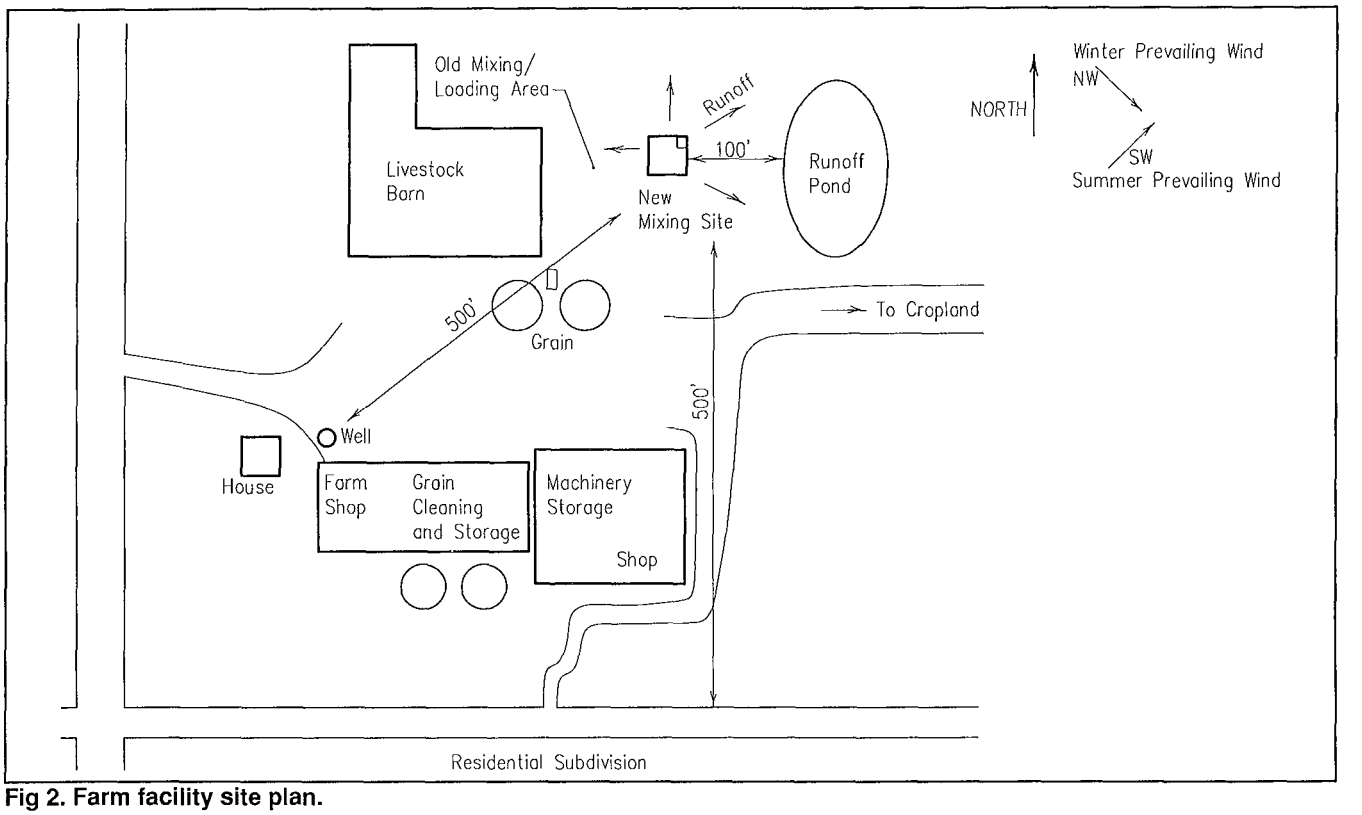

Fig 2. Farm facility site plan.

Locate pesticide or fertilizer storage sites down gradient and down slope from water wells and surface water features (lakes, streams, dry washes). Build diversions or earthen berms to contain spills and prevent flow of spilled product to wells or surface water. However, earthen dikes will not prevent infiltration into soil and contamination of an aquifer. Promptly clean up spills or provide impermeable surfaces for mixing areas to prevent contamination of an aquifer.

Soil type and topography of the proposed site must be analyzed and carefully considered. Porous soils (sandy) allow rapid movement of spilled pesticides and fertilizers to the groundwater while tight soils (clays) hold pesticides and fertilizers in the soil longer and allow more time for cleanup. The location of some proposed sites relative to water tables or flood plains may make them unsuitable. Check Soil Conservation Service (SCS) or department of agriculture soil maps to determine the type of soils for proposed sites. Determine the allowable bearing capacity of the soil for foundation designs and determine the depth to groundwater. A site that has a shallow depth to groundwater has a high risk of contamination in the case of a large uncontained spill. Consult local well drillers or hydrogeological information to determine depth to groundwater. State and local siting regulations may specify additional requirements in facility design specifications based on shallow aquifers or less than minimum distances to existing drainage ways, streams, lakes or wells.

Identify the local watershed. Include a site runoff control plan in the facility site plan. Study the existing drainage patterns and topography to determine how the site is affected by surface water movement onto or from the site. In the case of a large spill or in the event of a fire, runoff of contaminated water from the site should drain to an area that can be contained. Identify on the plan where and how runoff may be contained by dikes or dams, and the approximate number of gallons that can be contained.

For fire protection, emergency access and insurance purposes locate pesticide and fertilizer storage buildings at least 50′ from other buildings. Identify the storage area as a pesticide storage area. Place placards on fences or walls beside doors and windows so they are visible from at least 50′. Provide an all-weather access road for the unloading of pesticides and fertilizers and easy access upwind for fire fighting and other emergency equipment.

Remodeling Existing Facilities

Remodeling existing buildings for fertilizer and pesticide storage may be an option. Make an environmental and site assessment of the existing site as discussed above.

Select a building that is as remote as possible from other structures including feed, seed or other types of storages and shop, machinery and livestock buildings to prevent fires from spreading. Isolating pesticide and fertilizer storages minimizes accidental exposure

to workers, animals and visitors unaware of the potential danger of the area. Hazard warning signs should be clearly visible.

Evaluate the adequacy of a facility before remodeling. Determine concrete floor and wall thickness to make sure the facility can withstand the loads applied by bulk storage tanks or equipment wheel loads. Correct structural defects to prevent future problems. Consider the size of the building and site especially if there is a possibility of future expansion. Demolition and removal of nonusable buildings may be required to make remodeled facilities more efficient in traffic flow and space utilization.

Compare the cost of remodeling and the associated design costs (along with the cost of demolition and removal of existing concrete slabs and buildings) to the cost of land purchase and costs of building a new facility. In many cases remodeling limits future expansion.

Chapter 12, Maintenance of Facilities, discusses several ways of sealing existing slabs to provide secondary containment. The major concern when placing new concrete against old is the cold joint or junction. These joints may need extra maintenance and inspection to maintain the integrity of the containment. Curbing the perimeter of a small shed to provide secondary containment can be done by pouring a concrete curb or using concrete blocks filled with concrete. An existing concrete slab can be curbed and ramped to provide secondary containment for minibulk storage or walls can be built for diking large tanks.

If a containment structure is not waterproof, consider the following alternatives:

- Patch and repair concrete cracks; annual maintenance is required to keep the facility functional.
- Use premolded synthetic liners that can be fabricated to fit inside a leaking containment structure.
- Apply spray-on synthetic liners to the structure; these are applied in thicknesses of up to 60 mil.

4. FUNCTIONAL SYSTEM DESIGN[4]

Functional planning of pesticide and fertilizer facilities is best addressed in conjunction with the site plan when developing new or remodeling existing facilities. A well planned and designed facility is needed for human and environmental protection. The facility design provides for several distinct and separate functions:

- Worker safety.
- Pesticide storage and secondary containment.
- Fertilizer storage and secondary containment.
- Mixing/loading pad.
- Waste disposal area.

Worker Safety

Equip the worker safety area with all the emergency equipment necessary to prevent harm or provide emergency aid to the workers. Provide an eyewash and deluge shower to rinse spilled pesticide and fertilizer from the eyes, face and body. Also provide a first aid kit and spill response kit to deal with accidents in a timely manner. Install fire extinguishers and telephones or other two-way communications system. Locate a telephone or other two way communication system in or near the pesticide storage area for communication with fire, police and health authorities. Have the current *Emergency Response Guidebook*, DOT P5800.5, Appendix A, available at each site. It contains valuable emergency information, including a national poison center hotline number with 24 hr emergency response assistance. MSDS for each pesticide and fertilizer must be readily available. Inform all employees where these sheets are filed and train them to be familiar with each MSDS at the beginning of employment as well as during annual training reviews and when a new pesticide or fertilizer is added.

Storage for Pesticides or Fertilizers

Storage areas may include a fenced outside area, storage building, warehouse or bulk storage tanks inside a dike. Plan a storage facility as an isolated, secured area with a single use, separate from other activities and storage areas (feed, seed and fuel). Design the storage area to protect pesticides and fertilizers from possible theft, unauthorized use by untrained personnel and temperature extremes. Provide security with a properly designed chain link fence or a building with lockable doors. Proper storage protects workers, visitors, children and animals from unknown or accidental exposure to pesticides and fertilizers. In a properly designed storage facility, the environment, including soil, surface water and groundwater are also protected from accidental release by containing the spill until it can be properly recovered.

Use placards and signs to identify pesticide and fertilizer storages. Ventilate storage buildings, Chapter 6, Pesticide and Fertilizer Storages, to prevent fumes from concentrating in the building. Connect smoke or fire detectors to an external site away from the storage building or to the local fire department. In cold climates, a heating system may be required to maintain safe storage temperatures to prevent product degradation. All wiring and electrical equipment (lights, heating, ventilation) must meet local and national electrical codes.

Secondary Containment

Secondary containment protects the environment from accidental leaks and spills of bulk liquid storage tanks by preventing spills from entering the soil and possibly surface water or groundwater. Secondary containment is usually separated into three areas: fertilizer storage, pesticide storage and mixing/loading activities. Pesticide storage and pesticide mixing/loading can sometimes share a containment structure depending on circumstances. Fertilizer and pesticide containment, however, **must** be separate. Small spills occurring during the normal daily routine of mixing/loading pesticides and fertilizers into spraying equipment are contained on a mixing/loading pad.

Place bulk liquid storage tanks within a secondary containment area to temporarily hold a release of the pesticide or fertilizer from pipes, valves or primary storage tanks. The spilled product can then be easily recovered instead of leaching into the soil or draining into surface water.

Large fertilizer tanks may be contained in a dike constructed from concrete, a synthetic liner system or a relatively impervious soil (bentonite, attapulgite, natural clay). Fertilizer containment usually covers a large area because of the size of the tanks used to store fertilizer solutions. Pesticides, rinsate and waste water are typically contained in a concrete dike or synthetic liner system such as a plastic or fiberglass tub. Equipment loading areas are designed with a curbed pad of concrete or other impermeable material to contain, collect and transfer rinsate to storage tanks.

Mixing/Loading Area

The mixing/loading area provides secondary containment during the transfer of pesticides from stor-

4 David W. Kammel, Agricultural Engineering Department, University of Wisconsin Cooperative Extension, Madison.

age to the loading area. The mixing/loading pad is used to park application or transport equipment during the loading or unloading of pesticides and fertilizers. Typically, this area is a sloped, curbed concrete pad used to collect washwater from the exterior washdown of spray equipment and tank and plumbing cleanout. Repair sprayer equipment in this area to collect any material that leaks or is drained from the tanks or booms of the spray equipment.

Pesticide containers, minibulk storage tanks and the pumps, valves and hoses used to transfer pesticides and fertilizers from bulk storage are located in this area. Pumps, valves, meters, batch mixing tanks and hoses are sometimes located in a separate curbed area within a containment. The mixing/loading area is located adjacent to the storage containment area to minimize transfer distances for convenience. Leaks and small spills occurring during the transfer and handling of pesticides are contained and collected in this area.

Functions typically performed in storage and mixing/loading areas are:

- Storage, handling, mixing and transferring of pesticides and liquid fertilizers.
- Operational containment, handling and disposal of drips, spills and rinsate.
- Secondary containment of pesticide or liquid fertilizer leaks and spills.
- Loading aerial or ground sprayers and unloading transport vehicles.
- Unloading and cleanout of sprayer tanks and plumbing.
- External washing of agricultural aircraft or ground sprayers.

In smaller, less complex facilities, the mixing/loading equipment may be positioned in the pesticide containment area or mixing/loading pad. If located in the containment area, elevate valves, pumps and other electrical equipment on platforms above containment liquid levels.

The pad is sloped to a shallow sump where rinsate is collected, pumped to rinsate storage tanks and used as makeup water for subsequent sprayer loads if a single pesticide or fertilizer or compatible mix is involved. If this area does not have a roof, precipitation falling on the pad is collected and stored for future use if it contains a single pesticide or fertilizer, or a compatible mix. If the pad is clean, i.e. the pad was thoroughly scrubbed to remove pesticides and residue **before** precipitation occurred, it can be pumped off the pad. Discharge of precipitation from pads should be done only under careful supervision. In states that do not allow this practice, collect, store and dispose precipitation in the approved manner. Discharge containing pesticide residues (including precipitation from a pad that has not been properly cleaned) can lead to fines and expensive site cleanup liability. Roofing mixing/loading pads may be an economically viable alternative compared to potential liabilities under RCRA, CERCLA (fines) and costs of remediation. **NOTE:** Do not drain rinse water or rinsate from a sprayer onto the mixing/loading pad as a standard practice due to the probability of contamination by dirt, trash and other pesticides and fertilizers. Instead, drain rinsate directly from a low drain point on the sprayer and transfer it directly to rinsate storage tanks. Also, if cleaning or repairing equipment on a mixing/loading pad, do not use solvents or degreasers or allow lubricants to drain onto the pad. Mixing these materials with pesticides leads to costly waste disposal problems.

Waste Disposal Area

The waste disposal area holds empty containers until they can be disposed properly. Old burn piles and uncovered empty container piles have been identified as major contamination sources at many existing storage facilities. Store triple rinsed, empty, "one-way containers" (5 gal cans, metal drums, cardboard cartons, paper packages) in a covered, curbed, secured area to prevent rain entry into the containers or leaks from entering the soil. Store empty minibulk or refillable containers in this area until returned or refilled. Security of this area is recommended to prevent unlawful and unsafe reuse of empty pesticide containers by unauthorized personnel.

Example Facilities

To demonstrate planning and design of facilities, several examples of facilities are described. Regardless of the size of the operation, incorporate each of the functional areas into the total system facility plan for all operations. The size or scale of the functional areas of an operation depends on the type of operation, amount of product stored at the facility and the number of employees. In many cases, several functional areas (e.g. minibulk storage, rinsate storage and mixing and loading equipment) can be combined providing flexibility in the layout and design of the facility. As the size of the facility increases, the space needed for each functional area becomes larger and better defined. Locate functional areas adjacent to each other to provide for ease of material handling, efficient traffic flow, easy access from one area to another and worker safety.

Small Scale Facility

The facility shown in Figs 3 and 4 is isolated from other buildings. Its concrete pad accommodates several functional areas. Spray equipment drives onto the pad from the service road. Worker safety equipment is near the mixing area. Loading of a sprayer is done on the pad, while a small diked area provides secondary containment for pesticides and fertilizers and also is used as the mixing equipment and rinsate storage tank area. Precipitation that comes into contact with pesticides or fertilizers is collected and stored as rinsate until it can be properly disposed by direct land application (at, or below label rates) or reused as makeup water in subsequent mixtures.

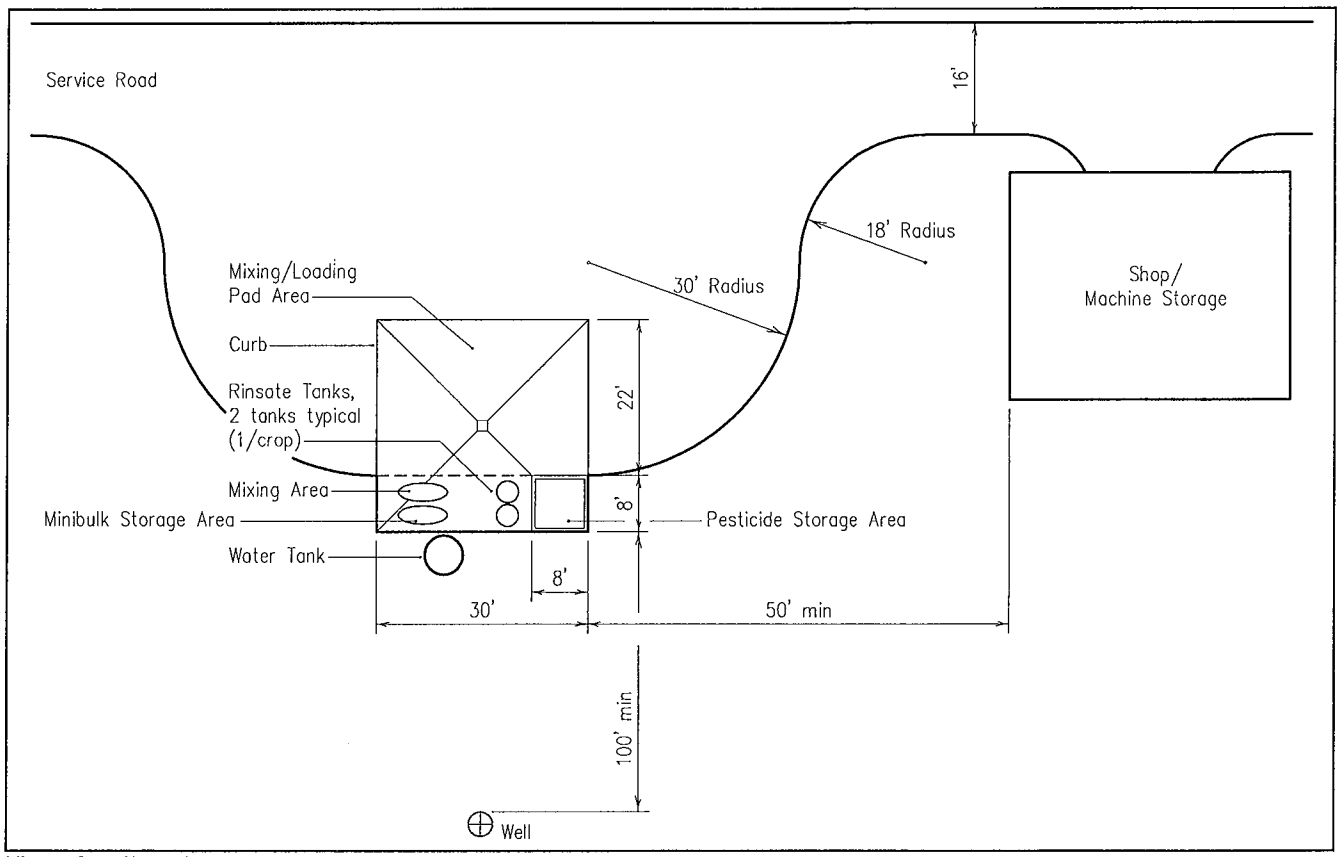

Fig 3. Small-scale drive-across facility.

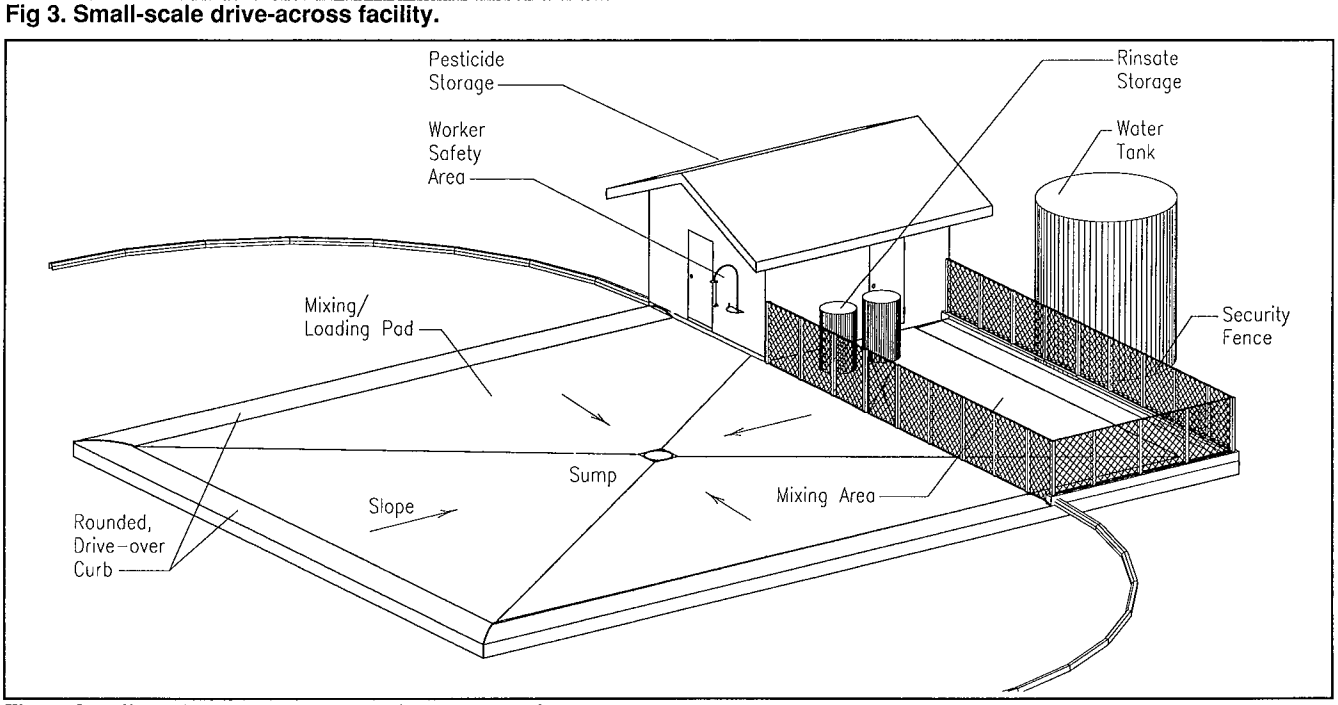

Fig 4. Small-scale drive-across facility perspective.

Figs 3 and 4 show a small building located on a raised curb to provide security and secondary containment of stored pesticides. The other functional areas share space on the concrete pad in this design. The primary pad provides for secondary containment during loading and provides an area near the mixing equipment for rinsate storage tanks. Minibulk storage could also be on the pad. Fence the area around the mixing and minibulk storage area in Figs 3 and 4. This design allows driving across the pad from three directions. The size of the pad depends on the size of the equipment.

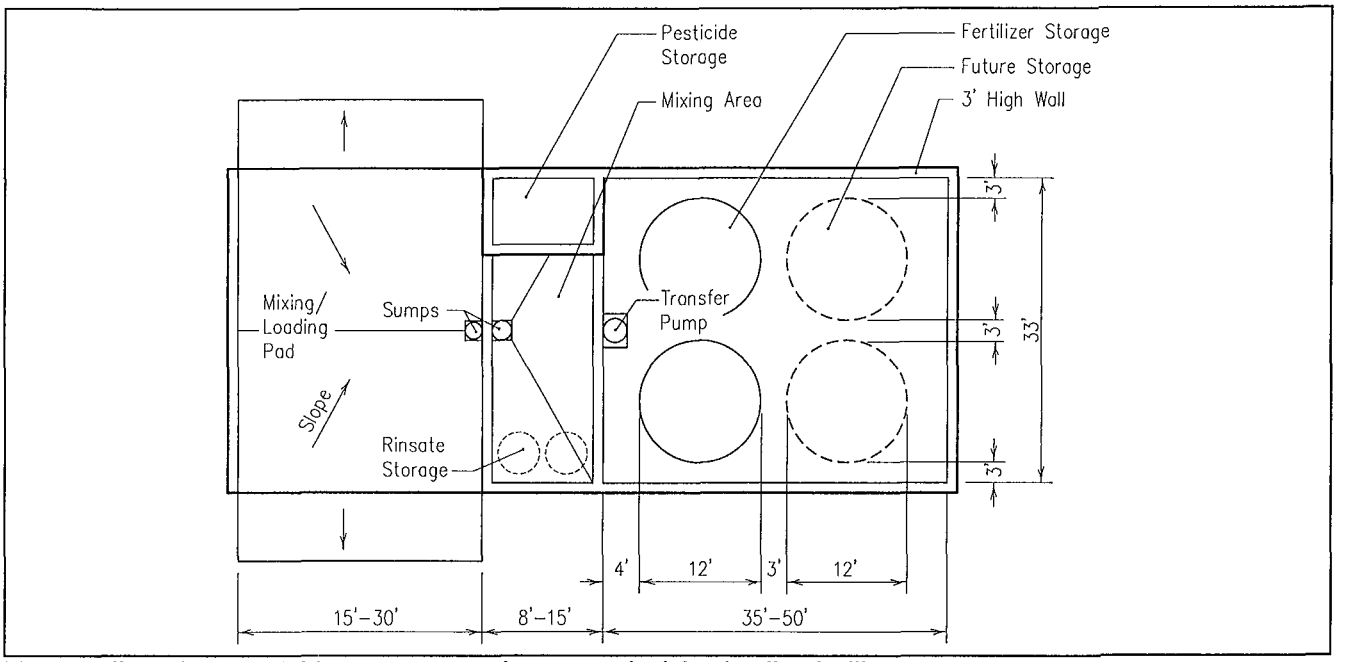

Fig 5. Medium sized pesticide storage, containment, and mixing/loading facility.

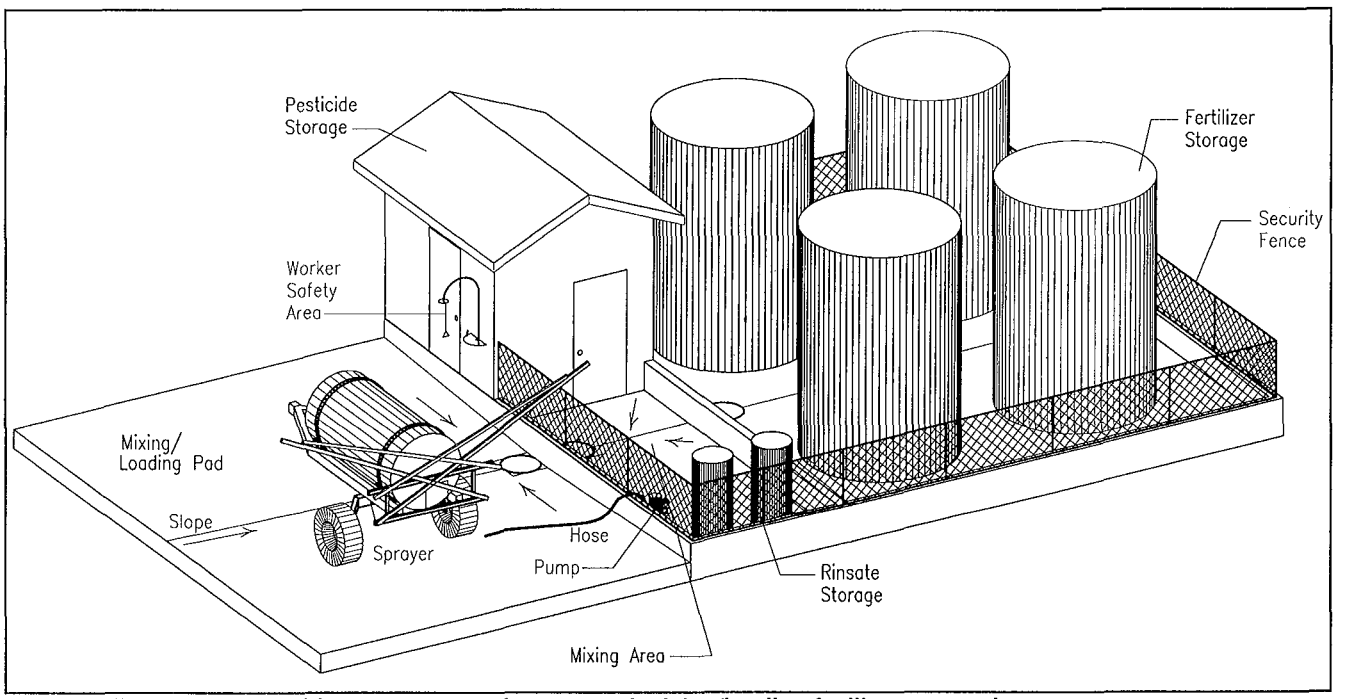

Fig 6. Medium sized pesticide storage, containment, and mixing/loading facility perspective.

Medium Scale Facility

A medium sized facility is shown in Figs 5 and 6. In Fig 5, a drive-through mixing/loading pad is located near the secondary containment dikes for pesticides and fertilizers. In Fig 6, traffic enters the pad from any of three directions. As the space needed for this size of facility increases, the potential handling of larger volumes of contaminated precipitation increases. A small building covering the mixing/loading pad and pesticide secondary containment eliminates precipitation from entering these areas and also provides security. A worker safety area and office might be included in the building for the employees and plant manager if an alternate exit door is available separate from the pesticide and fertilizer storage exit. The fertilizer secondary containment can be expanded in the future and is commonly fenced off for security. Precipitation collected in the pesticide or fertilizer dike must be stored for disposal or evaporation in this design unless it is known to be free of contamination. If suitable for discharge, precipitation

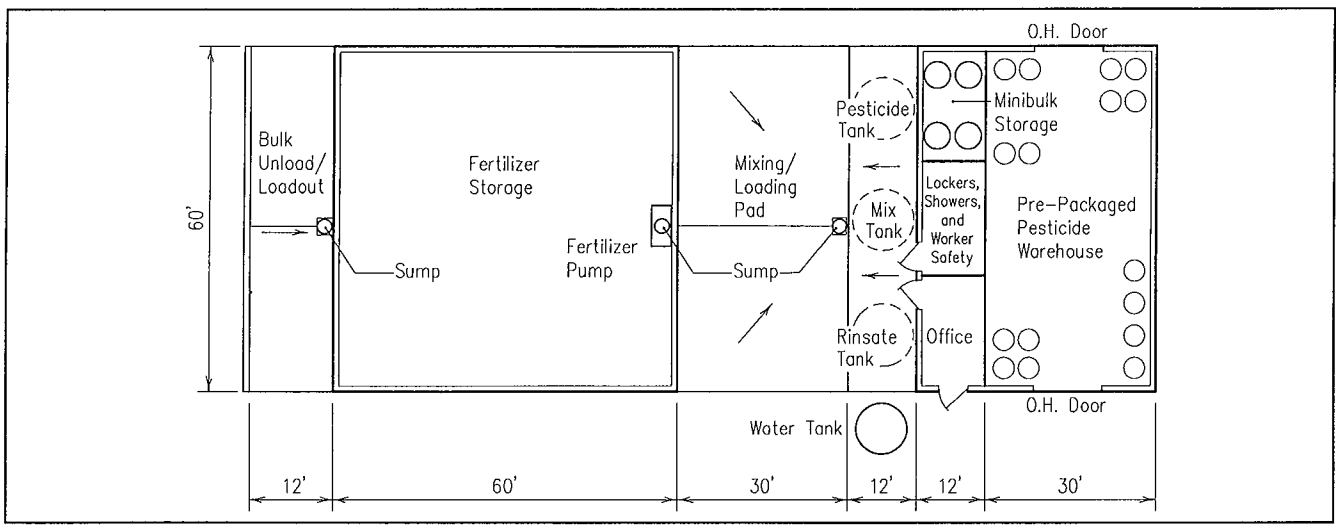

Fig 7. Large-scale pesticide/fertilizer facility.

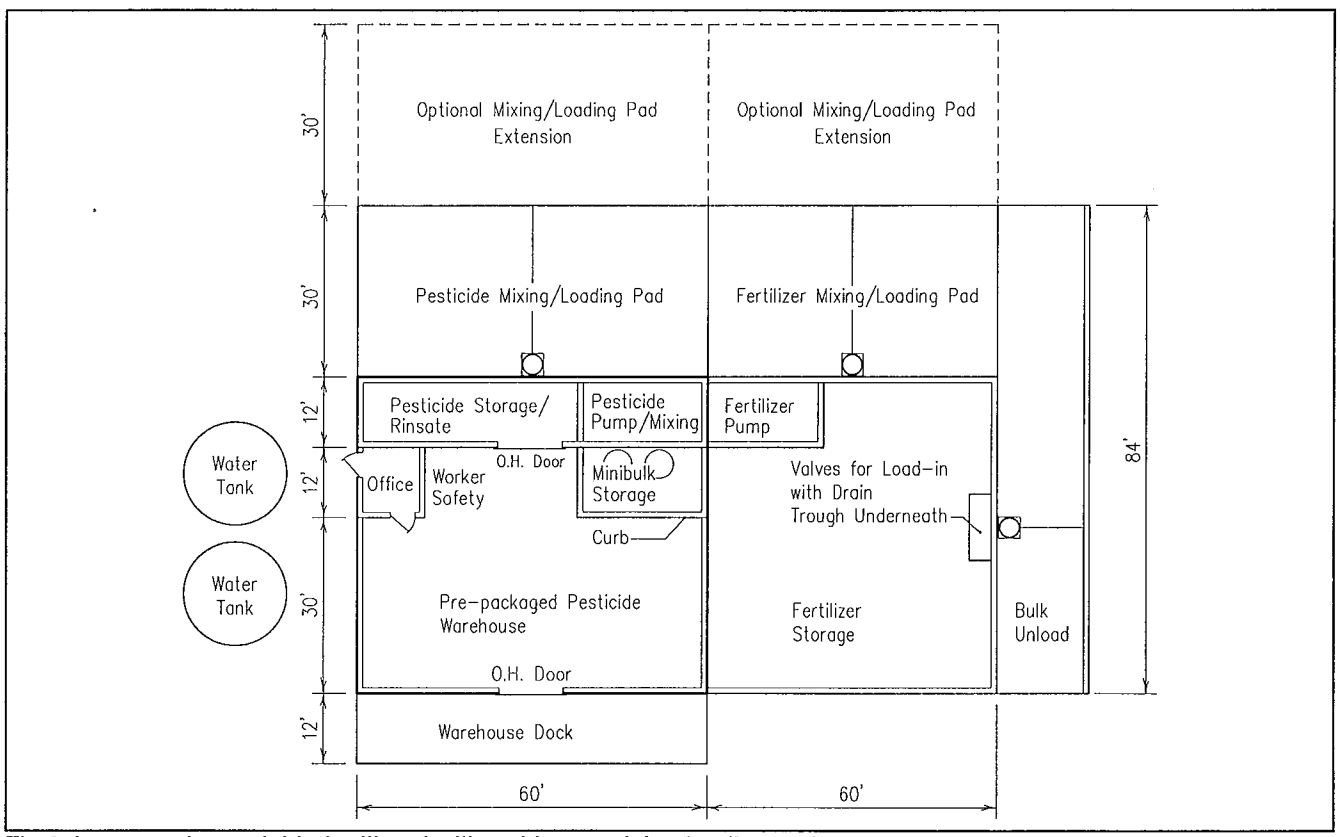

Fig 8. Large-scale pesticide/fertilizer facility with two mixing/loading pads.

can be pumped over the containment wall. Roofing the entire pesticide storage and mixing/loading pad prevents precipitation accumulation and minimizes disposal problems in areas of abundant precipitation.

A simpler, one-sump facility design, similar but larger than the small farm facility, Fig 4, is feasible for operations handling either pesticides or fertilizers. In this design, the entire pad, which slopes to one central shallow sump, provides 125% of the containment volume of the largest storage tank.

Large Scale Facility

Fig 7 shows an example of a large-scale facility design layout. The loading pad allows more than one sprayer to be loaded at a time. A separate office and worker locker room and safety area are provided to accommodate the larger number of employees. A warehouse stores packaged products. Minibulks store bulk pesticides and are placed in a curbed area to provide secondary containment. The mixing area and rinsate storage are placed in a small secondary containment area next to the larger dike used for the

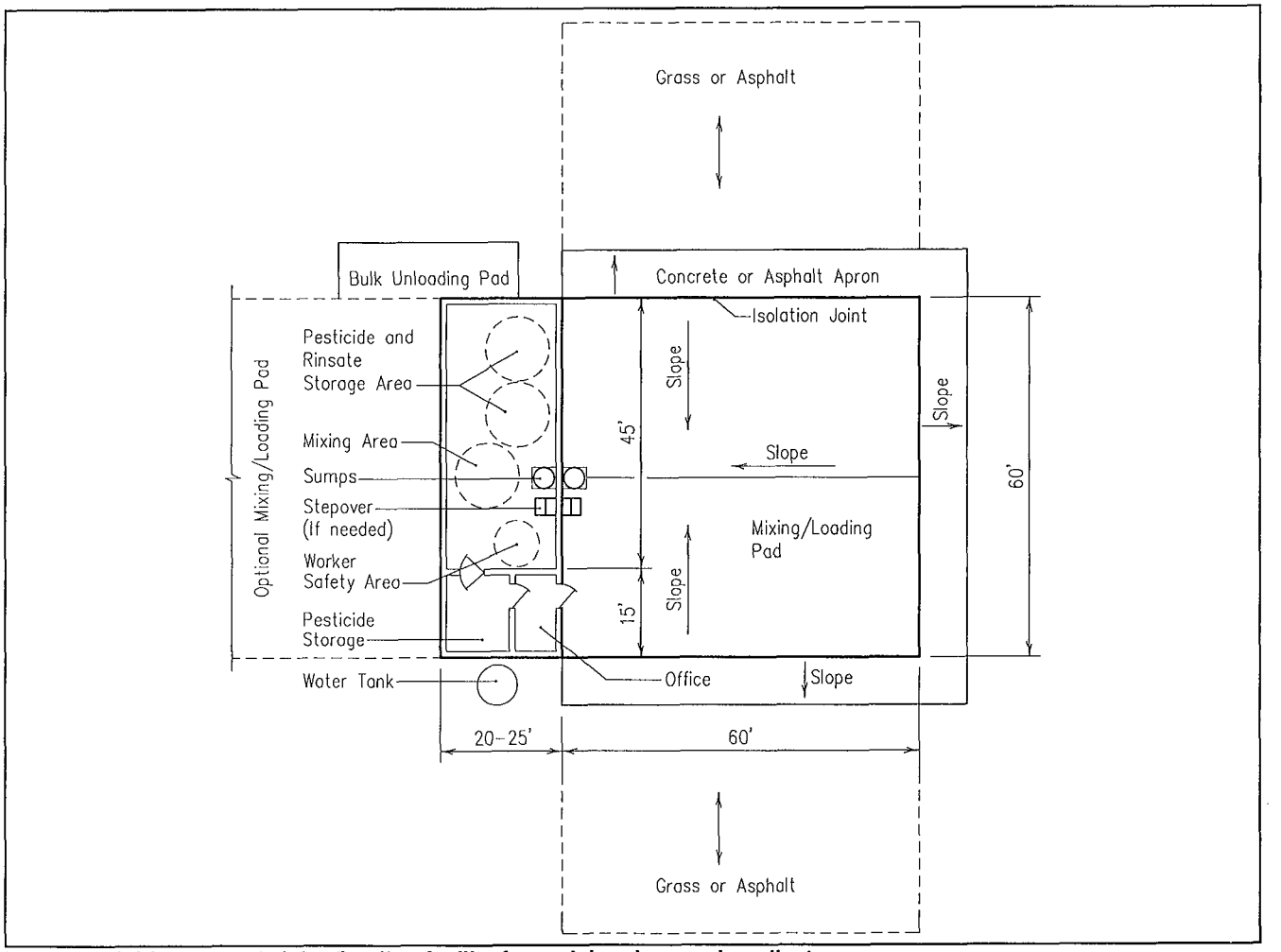

Fig 9. Pesticide storage/mixing/loading facility for aerial and ground applicators.

Table 1. Wingspans of common aircraft.

Wingspan, ft	Example aircraft			
35	AG CAT A	AG CAT B	Cessna Ag Wagon	Piper Braves
45	Air Tractor AT-401	Air Tractor AT-502	Ayres Thrush	
50-52	AT-802	Melex Dramadors		

fertilizer tanks. A separate bulk unloading area prevents tankers from blocking the loading pad.

For large-scale facilities, the design and layout should allow for future expansion. Fig 8 shows another option for a facility that handles bulk fertilizers and pesticides, and packaged product. A storage room for dry pesticides and small liquid pesticide containers can be located near the minibulk and mixing/loading equipment area. In this example, the pumps and valves are placed in their own small secondary containment area to prevent leaks and small spills from contaminating the entire area. The functional areas in this facility are separated but are placed adjacent to one another to facilitate access by employees.

Aerial Applicator Facility

Fig 9 shows an aerial applicator site. The area needed for the mixing/loading pad is sized for fixed wing aircraft to allow the entire plane and boom to be over a contained area. The airplane can drive onto the pad from any of three directions. Aircraft tie down anchors are included during concrete placement. The central area serves several functions; pesticide storage, secondary containment, mixing/loading area and worker safety area. Fence this area for security. A small office may also be needed. A bulk unloading pad is also provided and there is an option of building a second mixing/loading pad. Roof or completely enclose these facilities in areas of high precipitation to minimize disposal problems.

Fig 4 is also an excellent aerial applicator facility design when scaled appropriately. Design mixing/loading pads to provide 3′-5′ beyond wingspans, Table 1, to contain drips. Paint a taxi centerline to help center aircraft on the pad.

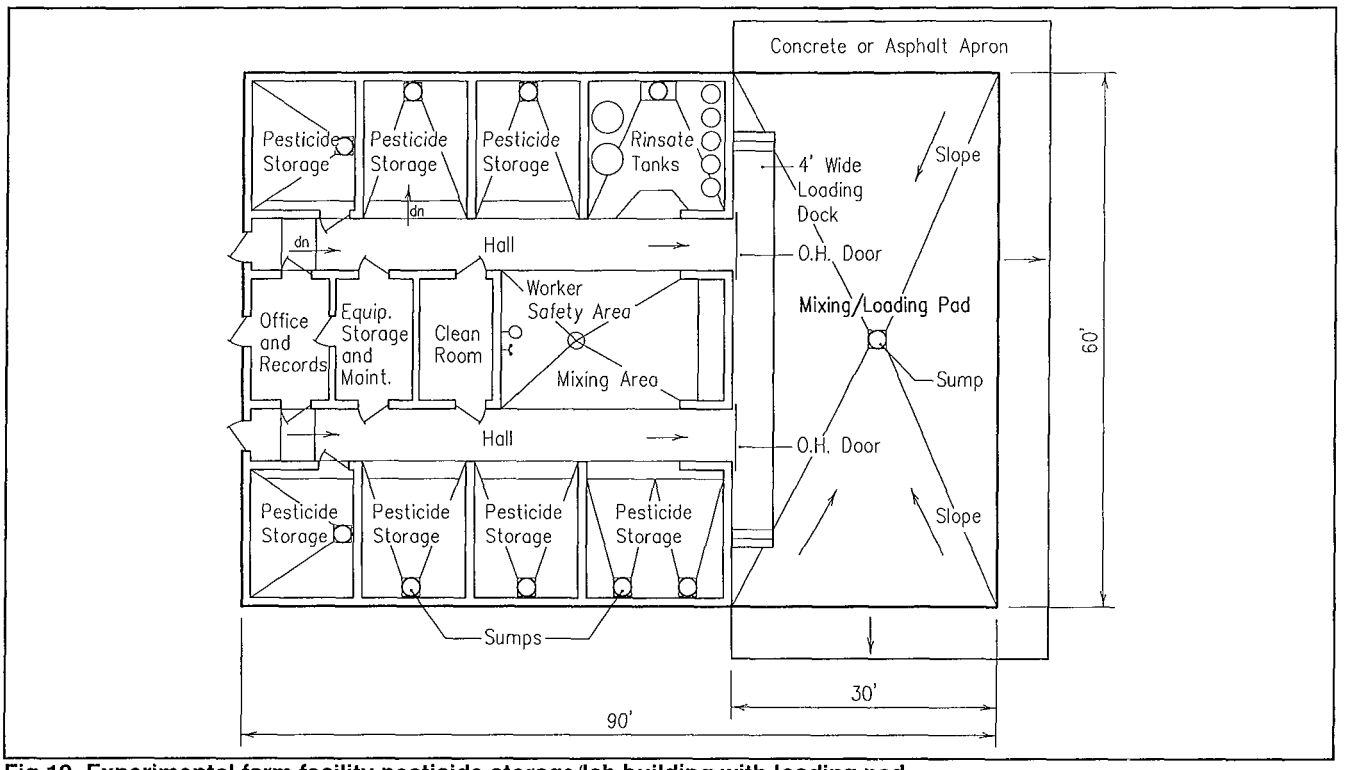

Fig 10. Experimental farm facility pesticide storage/lab building with loading pad.

Experimental Farm Facility

Universities and chemical companies are designing new facilities for experimental farms to store and manage a large variety of commercial and experimental pesticides and fertilizers used in field studies, Fig 10. Often, several different departments store pesticides and fertilizers. Separate lockable storage areas for each department are included in the design. Managing this type of facility becomes quite important because of the wide variety of pesticides, fertilizers and equipment used, and the number of people using the facility. Pesticides and fertilizers are often stored during winter requiring environmental control of the storage area. An area is also needed to store empty containers. A major problem for industrial or university research facilities is disposal of many small volumes of unused pesticides and fertilizers, unused field spray mixtures and many rinsate combinations from a variety of sprayer sizes and types. Research farms sometimes must contract with a hazardous waste disposal facility to dispose pesticide residues considered hazardous waste. Other options may include providing extra check plots or extra planted areas suitable for distributing excess field mixes and sprayer rinsate, or a closed loop pesticide and fertilizer waste water processing system like those discussed in Chapter 11, Rinsate Management and Waste Disposal.

Alternatively, research stations may use modular transportable or translocatable storage and laboratory buildings located on, or adjacent to, the mixing/loading pad. Modular structures must include appropriate safety equipment and building design as do permanent buildings, such as secondary containment, fire rated construction, fire suppression, personnel safety equipment and electrical requirements.

Modular building units allow incremental purchase and expansion by separate research departments, and alternative future uses and locations. Provide separate pesticide and fertilizer handling and rinsate storage for each department to eliminate possible cross-contamination and damage to research. One common pesticide and fertilizer waste disposal facility may be possible if the facility has the capability for handling the variety of products used.

5. WORKER SAFETY AREA[5]

This chapter summarizes basic considerations that contribute to human safety in pesticide/fertilizer facilities. It does not substitute for pesticide certification or employee safety training. Contact your state extension program leader, Appendix E, for legal requirements and help in establishing safety standards in your facility and training for the people involved.

Worker safety while handling pesticides and fertilizers is a major concern. Develop a worker safety area in any size facility. The size of the safety area and the amount of equipment required depends on the type of facility, number of employees and types of products handled.

Safety Equipment

Provide emergency showers and eye flush fountains adjacent to the mixing/loading equipment. Locate emergency shower, eyewash, up-to-date pesticide first aid kits, complete spill cleanup kits (absorbent, mop material, detergents, sealable hazardous waste containers, etc.) and current MSDS for the appropriate pesticides adjacent to the work area to allow quick access. **Place the shower/eyewash in an easily accessible area with no tripping hazards in the way of workers.** Select emergency showers that provide a 30 gpm capacity and eyewash equipment that provides 2.5 gpm. In addition, install wash basins nearby, as hand transfer of pesticides to other body parts is a major factor in pesticide poisoning.

Use emergency pull alarms to summon help or to inform others of a spill or accident. Locate pull alarms in storage and mixing/loading areas where spills are most likely to occur. It is also essential to have access to a telephone or other two-way communication system in a building away from the immediate facilities in the event of a fire or other emergency. A second phone on the premises (e.g. office) offers convenience. Locate portable fire extinguishers, appropriate for the products on-site, outside storage areas near the door and in other strategic locations. Install smoke or fire detection equipment in all facility rooms. Place exit signs above all exits to guide workers and visitors in an emergency. Consider installing emergency lighting to enhance evacuation. Place building exit route maps in strategic locations to aid evacuation of large facilities. Label fire alarms and extinguishers clearly. Consult with your local fire marshall for planning location of exits, extinguishers and alarms.

CAUTION: If office space or an employee locker room is in the same building where pesticides are stored, separate rooms (ventilated by separate fans to the outside) with a separate outside exit door must be provided so that personnel do not have to go through the storage area to enter or exit the building. Dividing walls between the office and storage area can have a connecting door.

Personal Protection Equipment

Product labels specify the appropriate protective equipment and clothing to wear. Locate all personal protection equipment (PPE) in a clearly accessible and designated area, partitioned from the stored pesticide. MWPS recommends that two sets of personal protective equipment be provided for each worker. All equipment must be appropriate for protection against the most toxic pesticide used or stored on the site and for protection against the highest airborne concentration of that product.

Emphasize to workers what types of clothing and safety equipment to wear, including protective gas masks that are face fitted for each individual. Identify protective clothing according to pesticide label recommendations. Indicate, on each item, the pesticide for which it is suited. Store protective clothing in clearly marked lockers. Depending on the products handled, PPE may include:

- Aprons and unlined gloves. Check pesticide label for recommended composition of the gloves.
- Unlined boots made of rubber.
- Loose-fitting coveralls with long-sleeves and a snug fitting collar. Wear sleeves outside gloves and pants outside boots. Coveralls are available in cloth or disposable materials. Disposable coveralls are available in several materials; consult pesticide label for specific recommendations.
- Goggles or faceshield designed for pesticide and fertilizer handling.
- Respirator approved by the National Institute of Occupational Safety and Health (NIOSH), or the Mine Safety and Health Administration (MSHA), Appendix A. The respirator cartridge must be designed for the specific pesticides and fertilizers on site.
- Hats—wide-brimmed and water proof to protect the neck and face. Do not use hats with cloth or leather sweatbands.
- Teach workers the proper order of removing contaminated clothing, and how to decontaminate and inspect clothing for wear, leaks, tears and rips. (Inspect PPE regularly and replace as needed; repeated use and laundering diminish protective features over time.)

5 Vern Hofman, Extension Agricultural Engineering, North Dakota State University, Fargo.

Cleaning Contaminated Clothing

Assume that any clothing worn during the handling of pesticides and fertilizers is contaminated; there is always some dust or small splashes regardless of the care taken. Store and clean contaminated clothing separately from uncontaminated clothing.

It is unknown how effectively laundering removes pesticides and fertilizers from clothing or how much residue remains in the washing machine after laundering. The following recommendations are conservative to avoid accidental exposure to unsuspecting people. **NOTE:** Because of their size, children may be harmed at exposure levels not harmful to adults.

- Do not launder clothes in public laundromats.
- Do not send clothes to a commercial laundry service without informing management of the nature of the pesticides and fertilizers.
- Commercial pesticide and fertilizer facilities should provide laundering facilities on site, to protect workers' families.
- Single family operations should have a second washing machine expressly for contaminated clothing. A used machine should be adequate and is inexpensive when compared to the potential health risks to other family members.
- Line dry clothing. Sunlight helps degrade some pesticides.
- Wear rubber gloves when handling contaminated clothing. Hands absorb pesticides and can contaminate other parts of the body.
- Do not try to clean clothing that has full strength pesticides on it; washing only increases the overall contamination level of the other clothing. Dispose properly; see Chapter 11, Rinsate Management and Waste Disposal.

Safety Training

The Hazardous Communication Standard, part of OSHA's Worker Right-to-Know Law, requires worker safety training. Identify a training coordinator and develop a training program for using emergency equipment and evacuation procedures, and reading of MSDS. Train all full time and part time employees, informing them of the hazards at work. Document the training of employees and keep a record of training for each employee. The owner may have to prove at a later date that employees were informed of the hazards in the workplace. Use the emergency plan discussed in Chapter 10, Emergency Response Planning, as part of the employee training.

Implement safety training programs for all new employees as part of their initial orientation; regularly review safety procedures with all employees. Present worker right-to-know information as part of the safety program. Inform all workers of the types of materials they handle, how to handle them safely, and the potential health risks involved. Keep MSDS on site and train workers to read and use the information in an emergency.

Even though OSHA regulations do not currently apply to operations with ten or fewer paid employees or operations employing only family members, safety is not a size issue. Safety knowledge is essential for everyone wherever pesticides and fertilizers are stored or used. It is strongly recommended that **ALL** users of pesticides and fertilizers establish a written, documented safety training program. Safety training for family operations should include anyone who may have to respond to an emergency (e.g. spouse) or be around pesticides and fertilizers as part of their daily activity (e.g. children doing chores).

6. PESTICIDE AND FERTILIZER STORAGES[6]

Pesticide and fertilizer storage facilities serve several functions. A well designed and managed storage facility protects human health, wildlife, the surface environment and groundwater from accidental and working exposure to pesticides. Segregate dry and liquid pesticides and fertilizers in the storage area. The primary design objective is to prevent spills or contaminated water from entering groundwater and surface water and guard human safety. The type and size of a storage facility depends on the size of the present (and future planned) operation and the type and amounts of pesticides and fertilizers used.

Pesticide Storage and Safety

Federal law, implemented by EPA Regulation 40CFR, requires full strength pesticides be stored in a secured facility to provide human safety, reduce vandalism and theft, and to protect groundwater and the surface environment (surface water, ground cover and airspace), and neighboring communities from leak and spill pollution and poison crises. Pesticide security can range from heavy-gauge, minimum-height chain-linked steel security fences with locked gates, to heated, locked, steel cargo containers, modular transportable pesticide and fertilizer storage buildings or custom designed pesticide storage buildings. In all cases, lockable storage and containment for liquid leaks/spills are required.

Packaged Product Pesticide Storage

Keep pesticides dry, cool and out of direct sunlight. Some pesticides require protection from freezing and temperature extremes. Check the labels for shelf life. The temperature range recommended for most liquid pesticides is 40 F-100 F.

Pesticide containers used once and then disposed, or one-way containers, are the most common types of pesticide containers. Inspect packages for broken or leaking containers prior to purchase and immediately after delivery. Store only clean, unopened packages or containers with no exterior residues to lessen the danger of contamination through the skin. Wear the recommended PPE even while handling clean, unbroken pesticide packages to reduce the chance of accidental contact.

Store boxes, jugs and other small packages of pesticides on shelves sized for the appropriate container, usually 12"-15" wide and approximately 18" apart. Lips on shelf perimeters prevent containers from accidentally sliding off the shelf. Steel shelves are easier to clean in the event of a spill. Paint wooden shelves with a chemically resistant epoxy paint or similar finish that is easier to clean. Store containers within easy reach and protect them from damage by sharp objects. A shelf height of 60" allows for lifting containers while standing on the floor. Do not use step stools, ladders or boxes to stand on to reach shelves.

Store herbicides, fungicides and insecticides in separate locations of the storage area to prevent cross contamination. Store dry bagged pesticides on shelves or pallets off the floor to keep them dry. To prevent leaking liquid pesticides from contaminating dry bagged product, store dry pesticides in a separate area and/or above liquid pesticide containers.

Several manufacturers package pesticides in refillable or returnable containers (small volume returnables, SVR) ranging in size from 15-30 gal. Minibulk containers range from 60-300 gal. Using SVR and minibulk containers reduces the problem of unused pesticide and container disposal if the dealer is willing to take back unused product.

Store 55 gal drums and minibulk containers on floor pallets, allowing for easy transport to and from storage buildings. Provide adequate space for forklifts to move minibulks in the storage area. One alternative for minibulk storage is to provide a concrete curbed containment pad large enough to hold the entire contents of the largest minibulk container. Chapter 7, Secondary Containment, gives areas required for containment of minibulk containers.

Tanks storing pesticides and rinsates must be compatible with the product. Some pesticides may attack the material in the tank causing it to soften, weaken and eventually fail. Check with the manufacturers of tanks and pesticides to determine the type of tank material best suited for a specific product.

The space required to store pesticides depends on the type of materials stored and the number and type of containers used. Table 2 shows the dimensions of several types of containers. Use this information to determine the amount of storage space required for the facility.

Planning and Layout

Build the pesticide storage facility as a separate, isolated structure used only for pesticide storage to prevent accidental contamination of feed, seed and fertilizers. Do not store pesticides near food, feed, fertilizers, seed, veterinary supplies and other products. Store pesticides only in original containers. Include an area for storing properly rinsed, empty containers until disposal.

---

6 David W. Kammel, Agricultural Engineering Department, University of Wisconsin Cooperative Extension, Madison.

Table 2. Pesticide container sizes.

Container	Size[a]
One way containers	
1 gal jug	4"x7"x12"
2.5 gal jug	6"x10"x18"
25 lb bags	2"x10"x15"
50 lb bags	4"x15"x25"
5 gal cans	12" dia. x 14" high
55 gal drums	20" dia. x 30" high
Refillable containers	
15 gal SVR[b]	16" dia. x 27" high
60 gal minibulk	40"x24"x33"
110 gal minibulk	36" dia. x 30" high
140 gal minibulk	50"x37"x36"
200 gal minibulk	43" dia. x 53" high
300 gal minibulk	44" dia. x 73" high
500 gal bulk	48" dia. x 75" high
1,000 gal bulk	64" dia. x 87" high
2,500 gal bulk	95" dia. x 117" high

aContainer dimensions are LxWxH: L=length; W=width; H=height.
[b]Small volume returnable.

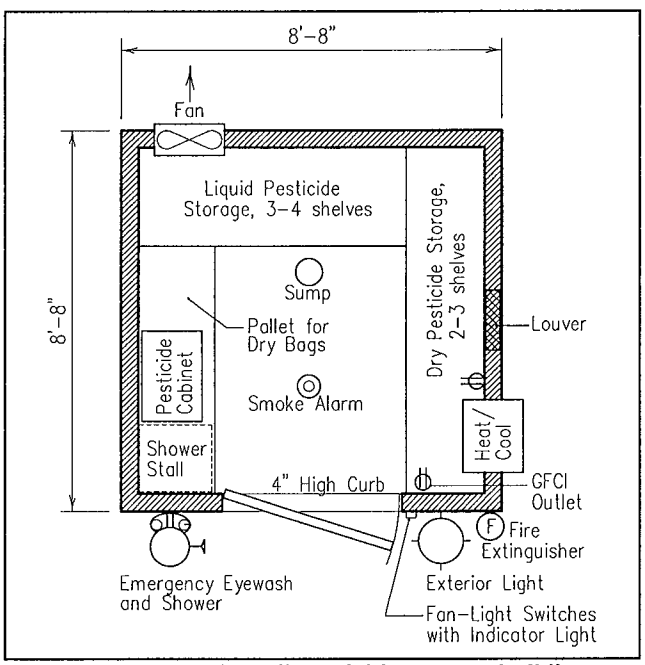

Fig 11. Plan view of small pesticide storage building.

Locate a storage building on a well drained site elevated approximately 12" above surrounding soil elevation. An example of a small storage building layout is shown in Fig 11.

Security

Security is required to prevent accidental poisoning of children, livestock and wildlife. Security also minimizes unauthorized access to pesticides and fertilizers, reducing the potential for accidental spills, vandalism and/or theft. Install a 12-gauge, chain-link fence, a minimum of 6′ high, around an open storage area such as pesticide secondary containment. If the fence is on top of a concrete wall, erect the fence so there are no ledges on the outside to allow someone to climb over the fence. If a concrete ledge is available at the base of the fence, install 6′ fence above the ledge. Provide locks on storage buildings or locked storage cabinets for small quantities of pesticide. Do not install door locks that must be unlocked from the inside. Also, store rinsate storage tanks and empty containers in a secure area.

Post signs on buildings or fences stating "**Danger-Pesticides**", "**Keep Out!**", "**No Smoking Area**". Signs should be legible at least 50′ from the building and located at each entrance to the pesticide storage area. These signs should be visible from all access points to the storage area. Post yellow, orange or red signs at approximately eye level containing words "**Pesticide Storage Area**" in black letters at least 3" high. The state pesticide coordinator can also provide information on signing requirements. Use exterior lights to illuminate warning signs and identify the building at night. A motion sensor or light sensor turns lighting on automatically and saves electricity.

Management

A management plan combined with facility design ensures a safe total system that provides proper storage, plus disposal of empty containers, unused product and rinsates. A well designed and managed storage and handling facility can be considered "good insurance" and could be a factor in reduced insurance policy costs. The cost of building a well designed facility is far less than the potential costs associated with cleanup of a large spill or fire, or with litigation of a lawsuit. Inventory, record keeping, worker safety and emergency action plans are all part of the management plan.

Siting and Setbacks

Setbacks of pesticide storage buildings to property lines or to other buildings on the site should provide as much separation from other use areas as can be reasonably allowed. Locate the storage building (with 1-hr fire wall) at least 50′ from other buildings or property lines. For a 2-hr fire wall with no doors, the setback can be 25′ from the adjoining building or property line. For a 4-hr fire wall with no doors, there is no minimum setback distance.

When siting a building, consider:

- Prevailing wind directions.
- Residential area proximity and exposure.
- Commercial area proximity and exposure.
- Environmental exposure.
- Fire hazard to surroundings.
- Emergency response services.

Provide access to the storage building site from all directions, if possible, for emergency and fire fighting equipment. A 12′ wide road accommodates emergency and fire fighting equipment.

Building Design and Construction

The storage facility design should consider both the potential for fire from flammable vapors and the toxicity to humans from contact with pesticides or

vapors. Select construction materials that are chemically resistant to the products stored. Ventilate areas to prevent vapor buildup.

General Construction

Building construction depends on the types of pesticides and fertilizer stored. Steel frame, post frame, stud frame, concrete and masonry can all be used. Design roof and walls for local snow and wind loads and any other loads applied to the building such as shelving loads and support of equipment. Check with insurance carriers for insurance requirements and fire officials on the building code requirements for construction of the storage facility.

Floor and Wall Surfaces

Choose interior floor and wall surfaces that are impervious to pesticides and easily cleaned and decontaminated. Painted steel, aluminum, fiberglass or high density plastic reinforced plywood panels are all good choices for wall liners. Storage building floors should also be watertight, chemically impervious and skid resistant. Concrete floors with an impervious sealant or an equivalent material that provides strength and impermeability must be used.

Secondary Containment

For inside storage rooms, secondary containment consists of a raised sill or ramp at least 4" high. An alternative is an open grate trench across the entire width of the door opening. Drain the trench to a sump where liquids can be temporarily collected and transferred to storage for reuse or disposal. Buildings can have a curb around their perimeter to prevent spills and fire fighting water from entering or leaving the area. Do not connect drains or sumps to a sewer or septic system or other open discharge. See Chapter 7, Secondary Containment, for more detail.

Fire Safety Design

Fire prevention is the first and most cost effective way of limiting fire hazard. A properly designed building with proper storage of flammables, a management plan and good housekeeping minimizes fire potential.

Design the storage building to protect against potential fire caused by the storage of flammable and combustible liquids inside the building and from fire in adjacent buildings. Many factors determine the advisability and use of fire walls; check your local fire codes for design requirements. Facility design can reduce the need for fire walls. Separate areas of high risk (warehouse) from other areas (office, retail space).

Codes and Regulations

Design requirements for the safe storage and handling of flammable and combustible liquids are covered by several different codes. National Fire Protection Association (NFPA) 30 "Flammable and Combustible Liquids Code", NFPA 395 "Storage of Flammable and Combustible Liquids on Farms and Isolated Construction Projects", and NFPA 43D "Storage of Pesticides in Portable Containers" all cover building construction requirements applicable to flammable and combustible pesticide storage and handling buildings. The National Electric Code (NEC) also covers electrical design for these facilities. See Appendix A for a list of other codes that may be consulted on flammable/combustible liquid storage.

Code Compliance

Many local codes reference or adopt certain national codes, Appendix A, as their own, but may also impose stricter requirements.

Commercial facilities usually fall under local zoning and building codes. On-farm storage of agricultural pesticides may be technically exempt from satisfying code requirements, but following these guidelines ensures a safer facility. **NOTE:** Always check with local zoning and building code officials to determine requirements for siting and constructing a pesticide or fertilizer storage facility.

In general, codes require certain standards for building construction and electrical design to reduce the risk of accidental fire resulting from the storage of flammable and combustible liquids. Proper building construction prevents rapid spread of fire. Proper electrical system design reduces the source of high temperatures or sparks that could ignite a flammable vapor or building materials.

Codes deal with the hazards of storage for flammable pesticides in several ways. One way is to limit the amounts of pesticides stored in a room or building; the larger the amount stored, the higher the risk and the more requirements on fire rated construction. Another way to reduce the fire hazard is to provide automatic fire suppression systems. Automatic dry chemical or similar systems are recommended for pesticide storage. Water sprinkler systems could pose more of a cleanup problem than the fire itself because pesticide contaminated water would have to be cleaned up after the fire.

Area Classification

Another way codes deal with the hazards of pesticide storage is to classify the use of the building. Generally, storage buildings that contain closed containers have less risk from fire than mixing/loading areas where pesticide containers are open and vapors are present.

The fire rating of the building construction and electrical design is based on the classification of the area by NFPA and NEC. Area classification depends on the amount and type of stored material and the use of the area (i.e. storage or dispensing). Container size and classification of liquids influence the quantity of material that can be safely stored in a specific size of building.

Building Use Classification

Storage building construction and electrical design depends on the use of the building. Buildings from which flammable or combustible liquids are *dispensed* are classified differently than buildings that *store* flammable or combustible liquids. Dispensing areas are more likely to have ignitable vapors than storage areas, thus more stringent fire safety design is required.

Classification of Liquids

The risk of fire from a stored liquid pesticide is based on the liquid's flash point. Flash point is the minimum temperature at which a pesticide gives off sufficient vapor to form an ignitable mixture within the air near the surface of the liquid or within the container. Liquids are classified as flammable or combustible according to the following NFPA definitions.

Flammable liquid

A liquid having a flash point below 100 F and having a vapor pressure not exceeding 40 lbs/in^2 absolute at 100 F is a Class I liquid.

Class I liquids are subdivided as follows:

- Class IA liquids include those having flash points below 73 F and having a boiling point below 100 F.
- Class IB liquids include those having flash points below 73 F and having a boiling point at or above 100 F.
- Class IC liquids include those having flash points at or above 73 F and below 100 F.

Combustible liquid

A liquid having a flash point at or above 100 F.

Combustible Liquids are subdivided as follows:

- Class II liquids include those having flash points at or above 100 F and below 140 F.
- Class IIIA liquids include those having flash points at or above 140 F and below 200 F.
- Class IIIB liquids include those having flash points at or above 200 F.

Some agricultural pesticides may have low flash and boiling points classifying them as flammable or combustible liquids. **NOTE:** Always check the label or MSDS of the pesticide to determine its flashpoint.

Separate liquids by class so that only certain areas require the class-specific design suggested by codes. For example, flammable materials require certain fire rated construction while nonflammable products do not. If flammable pesticides are stored with nonflammable pesticides, the building construction and electrical design must still consider the fire hazard of the flammable pesticide. The storage building construction recommendations relative to a fire hazard do not have to be followed if the pesticides stored are not flammable or are stored at temperatures below their flashpoint.

Some pesticides may be incompatible with one another producing toxic fumes or a flammable mixture if they become mixed accidentally. This poses a human safety hazard in the event of a fire or spill.

Explosion Venting

Where class IA or IB liquids are dispensed or where Class IA liquids are stored in containers larger than 1 gal, an exterior wall or roof construction should provide explosion venting design such as light weight roof assemblies, roof hatches or windows. NFPA has more information on requirements for explosion venting. Most pesticides are not flammable according to NFPA definitions, but always verify the flashpoint and class of each pesticide at a facility.

Storage Areas

Storage Container Size

Sizes of containers stored are considered in the safe design of the storage area. NFPA defines several sizes of containers and the corresponding safe storage practices for those containers. Containers are defined as any vessel containing 60 gal or less. A portable tank is a vessel with a capacity of 60-660 gal and designed to be movable. A tank is a vessel with a capacity greater than 60 gal designed for permanent placement.

Pesticide Storage

Provide separate areas for the different classes of pesticides. For example, a small separate storage area for flammable pesticides may be incorporated into a large warehouse for pesticides that are not flammable.

Do not store pesticides below grade or in basements. Many flammable vapors are heavier than air. The vapors can accumulate to a concentration that could be ignited by a spark or other source of ignition.

The storage arrangement of flammable/combustible liquids affects facility design. Consider:

- Aisle width (36" minimum).
- Height of shelves (60" maximum).
- Width of shelves (18" maximum).
- Separation of different classes of materials.
- Individual containment tub for each pesticide.

Storage Cabinets

According to NFPA guidelines, when storing flammable and combustible liquids, size storage cabinets to store no more than 120 gal of Class I, II, and IIIA liquids combined. Of this 120 gal, not more than 60 gal may be of Class I and II liquids. Locate no more than three cabinets in a single storage area. Maintain a 100′ separation between three-cabinet groupings.

Use storage cabinets with metal or wood shelves designed with 2" high door sill to contain spilled liquid. Construct wooden cabinets from 1" thick exterior grade plywood and finish with a chemically resistant product that permits easy cleanup. See Fig 12 for a small wood cabinet design. Choose metal cabinets constructed from No. 18 gauge sheet metal with

double walls spaced 1.5" apart. Several safety supply companies manufacture metal cabinets. Shelving can be metal or 1" nominal thickness wood.

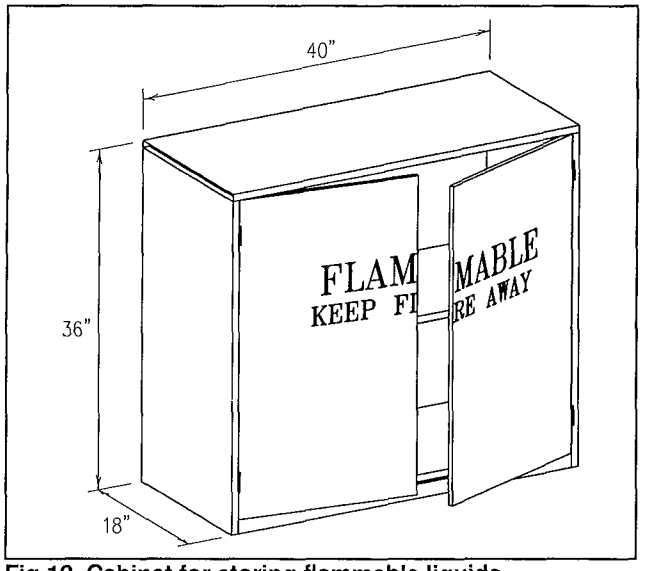

Fig 12. Cabinet for storing flammable liquids.

Fire Rated Construction

Fire walls or partitions separate areas of different uses and fire hazards. A fire wall slows the spread of fire from one area to another area. For example, mixing/loading areas may be separated from retail areas or office with a fire wall. All construction materials for walls, floors, roof, doors and partitions of a pesticide storage area should be constructed of fire resistant materials that meet or exceed local building and fire codes for a minimum of 1-hr fire resistant construction. Provide a parapet which extends at least 3′ above the roof line on exterior walls within 10′ of a property line or other building.

Concrete, masonry, and steel or wooden stud walls with Type X gypsum wallboard are commonly used types of building construction that have specific fire ratings. Fig 13 shows several cross sections of different fire rated wall construction.

Door Construction

A 36" wide exterior door opening to the outside with a self-closing exit lock allows safe exit and security. Select doors that do not have to be unlocked from

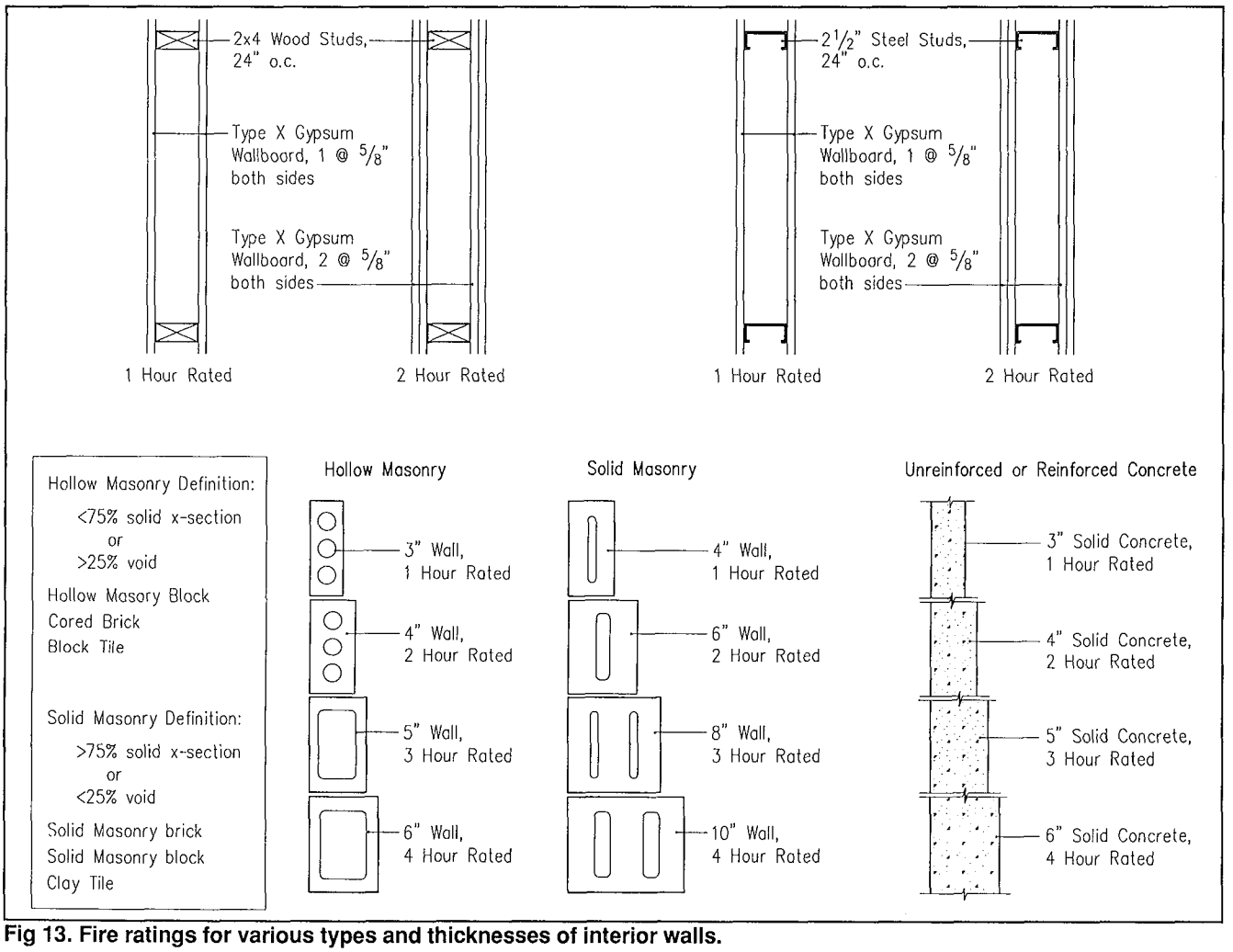

Fig 13. Fire ratings for various types and thicknesses of interior walls.

inside. A metal solid core door with metal jamb and weather seal is recommended. Select a U.L. listed fire rated door according to Table 3.

Table 3. Selecting fire rated doors.

If fire wall rated construction is:	Choose fire rated door of:
4-hr	3-hr
3-hr	3-hr
2-hr	1.5-hr
1-hr	0.75-hr

Use exit doors with panic hardware such as a push bar or plate. Hold-open hardware for the door provides easy access while carrying pesticide containers. In the event of a fire, doors should close automatically. Install an automatic self-closing device such as a fusible link on the hold-open door hardware. In large buildings space exit doors no more than 75′ apart.

Separate Inside Storage

NFPA 30 defines several different categories of separate inside storage. Fig 14 shows a schematic of how these areas are defined and Table 4 lists specific requirements that must be met according to NFPA 30. Inside storage rooms have no exterior walls. A cutoff storage room has at least one exterior wall. An attached storage building shares a common wall with an adjacent building with a different use (e.g. office).

For inside storage rooms with no automatic fire protection system and an area of up to 150 ft^2, a 1-hr fire rated construction is recommended. For an inside storage room with no automatic fire protection system and an area greater than 150 ft^2 but less than 500 ft^2, a 2-hr fire rated construction is recommended. A maximum total quantity of liquids stored in these areas is also suggested; consult NFPA 30 for specific recommendations.

For cutoff storage rooms and attached storage buildings of 300 ft^2 or less, a 1-hr fire rated construction is recommended. Cutoff storage rooms and attached storage buildings of areas greater than 300 ft^2 should have a 2-hr fire rated construction. The wall separating a cutoff storage room or attached storage building and another use area (e.g. office) should have a 2-hr fire rated construction. A maximum total quantity of liquids stored in these areas is also suggested; consult NFPA 30 for specific recommendations.

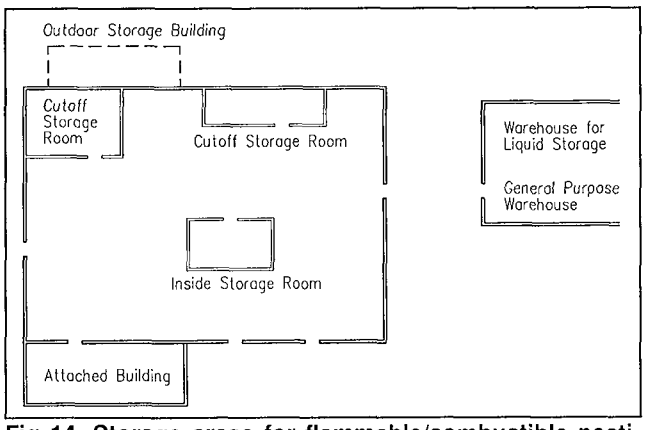

Fig 14. Storage areas for flammable/combustible pesticides—NFPA 30.

General Purpose Warehouse Storage

According to NFPA, a general purpose warehouse can be a separate, single story, detached building, or a portion of a building used for storage only, Fig 14 and Table 4. Separate the pesticide storage area from other storage areas such as fertilizer and feed storage and office or retail space.

NFPA 30 recommends limiting the total quantity of flammable liquids stored in a general purpose warehouse and also recommends the fire construction classification. Refer to NFPA 30 for more specific quantity recommendations.

Warehouse for Liquid Product Storage

According to NFPA, a liquid warehouse can be a separate, single story, detached building or an attached building used for storage of liquids only, Fig 14 and Table 4. NFPA does not restrict the total quantity of liquids stored in a liquid warehouse, but does recommend limiting height and quantity per stack.

Table 4. Storage area check list.
See NFPA 30 for specific requirements on the items listed below.

	Cutoff room and attached buildings	Inside room	Warehouse	
			Liquid	General purpose
Access openings	x	x		
Fire ratings	x		x	x
Explosion venting	x			
Containment	x	x		
Quantity of storage	x	x		
Drainage	x			
Square footage		x		
Venting		x		
Aisle width		x		
Distance separation			x	
Attached liquid warehouse			x	
Separation of liquids				x
Restrictions				x

If a liquid warehouse is located less than 10′ from a building or a property line, the exposed wall should be a 4-hr fire wall with a U.L. listed 3-hr fire door.

If a liquid warehouse is located more than 10′ but less than 50′ from a building or property line, the exposed wall should be a 2-hr fire wall with a U.L. listed 1.5-hr fire door.

Portable Storage Lockers

NFPA defines a hazardous material storage locker as a relocatable prefabricated structure that is transported assembled or ready to assemble at the final location. The design and construction of the storage lockers should meet all applicable local, state and federal regulations. The floor area of the locker should not be greater than 1,500 ft^2. The secondary containment system built into the structure should hold 10% of the total volume of containers or the volume of the largest container in storage, whichever is greater. Consult NFPA for recommended separation distances for these buildings.

Mixing/Loading Area

Mixing/loading areas are a higher risk for potential fire than pesticide storage areas. Building, construction, electrical design and setbacks from property lines and other buildings are more restrictive.

According to NFPA, mixing/loading areas where flammable liquids are dispensed from open containers should be separated from other use areas greater than 150 ft^2 by a 2-hr fire rated wall. Use automatically closing, U.L. listed 1.5-hr doors. Do not mix or handle flammable liquids in a basement or below grade.

Electrical Design

Electrical design for a storage/handling building is covered under the NEC also referred to as NFPA 70 and is typically incorporated into many state and local codes. Size the electrical system to accommodate the load from all lighting, heating and ventilating systems, and other installed equipment for the facility. Include starting demand or motor in-rush current from pumps, mixing equipment and other processing equipment when sizing the electrical systems. Provide an exterior electrical service disconnect in a locked, NEMA rated, weather proof cabinet. Provide duplex outlets with ground-fault circuit-interrupters (GFCI) and locate them outside flammable storage areas. Use vapor proof fluorescent or incandescent lighting fixtures. On small buildings, provide an exterior switch to control both the ventilation fan and the lights. An exterior operation light that indicates when the lights and fan are on is a convenient feature.

Choose electric equipment and wiring designed to prevent a spark from igniting a flammable vapor. Avoid sources of high temperature and sparks in storage and dispensing areas. Duplex outlets, switches, fan blades and motors are all potential sources of sparks. Use U.L. and NEMA listed anti-spark equipment.

Area Classification

Chapter 5 article 500 of NEC defines the area classification for hazardous locations such as pesticide storage/handling facilities. The hazard classification used by NEC depends on the type of material handled (material classification) and the use of the area (storage vs. dispensing).

A stored liquid, considered flammable, requires a Class I designation. If a stored liquid is considered combustible, a Class I determination is required only if the liquid is stored or handled at temperatures above its flash point. If combustible liquids are stored at temperatures below their flash points, no area classification is necessary and the electrical design and installation require no special provisions.

Degrees of Hazard—Division Classification

The NEC recognizes two degrees of hazard. Class I, Division 1 has more restrictive electrical design requirements than Class I, Division 2 because there is a higher risk of an ignitable air/fuel mixture present in the area. Class I, Division 1 wiring is usually referred to as explosion proof. Class I, Division 2 does not require explosion proof wiring and equipment. Article 500-5 of NEC lists the following definitions of Division 1 and Division 2.

In **Division 1**, an ignitable mixture is likely to be present continuously or intermittently under normal conditions of operation, repair, maintenance or leakage. A Class I, Division 1 location is a location in which:

- Ignitable concentrations of flammable gases or vapors can exist under normal operating conditions; or
- Ignitable concentrations of such gases or vapors may exist frequently because of leakage; or
- Breakdown or faulty operation of equipment or processes might release ignitable concentrations of flammable gases or vapors, and might also cause simultaneous failure of electric equipment.

In **Division 2**, an ignitable mixture is likely to be present only under abnormal conditions, such as failure of process equipment. A Class I, Division 2 location is a location in which:

- Volatile flammable liquids or flammable gases are handled, processed or used, but in which the liquids, vapors, or gases will normally be confined within closed containers or closed systems from which they can escape only in case of accidental rupture or breakdown of such containers or systems, or in case of abnormal operation of equipment; or
- Ignitable concentrations of gases or vapors are normally prevented by positive mechanical ven-

tilation, and which might become hazardous through failure or abnormal operation of the ventilating equipment; or

. A Class I, Division 1 location is adjacent, and to which ignitable concentrations of gases or vapors might occasionally be communicated unless such communication is prevented by adequate positive-pressure ventilation from a source of clean air, and effective safeguards against ventilation failure are provided.

Classification of Storage Areas

NFPA 30, Chapter 4, Flammable and Combustible Liquids Code also addresses container and portable tank storage area classification for electrical design. Where the room or facility is used only for storage of Class I pesticides in sealed containers—that is, no opening of containers—the only special requirement is that inside rooms (with no exterior walls) contain electrical wiring and equipment classified Class I, Division 2.

Electrical wiring and equipment for indoor storage areas in separate or attached buildings, rooms with exterior walls, rooms for storage of Class II and Class III liquids and outdoor drum storage is normally classified as general use.

A mixing/handling area where flammable liquid pesticides are used could be considered Class I, Division 2, if in the judgement of the authority involved, the location would become hazardous only in the event of an accident or emergency other than normal operating procedures. The quantity of flammable material that could escape in an accident, the adequacy of ventilation, the size of the building, and the record of the industry with respect to explosions or fires are all factors considered in determining the classification of the area.

A mixing/loading area where flammable pesticides are transferred from one container to another might be classified as Class I, Division 1 if the local authority considers it to be a special hazard.

Areas adjoining a classified area, but separated by a wall with openings is classified under the more restrictive requirements, as if the wall did not exist. Where the areas are separated by a solid wall, the classified area does not extend beyond the wall. Consult an engineer or code official to help determine the classification of the designed facility, and the extent of classified areas.

If the area is not adequately ventilated, the classification of the electrical design will be more restrictive. For example an adequately ventilated storage area may be classified as Class I, Division 2. An inadequately ventilated storage area would be classified as Class I, Division 1.

Install a lightning protection system to prevent a potential ignition source. Consult NFPA 78 Lightning Protection Code for specific design information.

Explosion-Proof Electrical Systems

Article 501, NEC, describes the requirements for explosion-proof electrical installations in Class I, Division 1 areas. Explosion-proof equipment is designed to withstand an internal explosion while not allowing ignition of surrounding gas or vapor through the release of hot gases or sparks or by an external temperature that would ignite the surrounding atmosphere. In general, a Division 1 area requires:

. Threaded steel conduit (or mineral-insulated metallic sheathed cable).
. Explosion-proof enclosures.
. Conduit seals at any enclosure containing a sparking device or surface temperatures.
. Conduit seals at the boundary between a Division 1 and Division 2 area.
. Approved or U.L. listed lighting and other electrical fixtures.

Requirements for Division 2 areas are relaxed to the extent that explosion-proof enclosures are only required for devices that have hot surfaces or generate sparks during normal operation. Additional types of electrical cable are also allowed for wiring in a Division 2 area.

Equipment approved for use in a Class I area must be marked to show the Class, Division and operating temperature of the piece of equipment. U.L. listed equipment has such markings. All electrical equipment installed in other classified areas must be approved or listed for the appropriate Class and Division.

Sources of Ignition

In areas where flammable vapors may be present, take precautions to prevent sources of ignition such as open flame, smoking, hot surfaces, sparks, friction heat, radiant heat, cutting and welding, spontaneous ignition, lightning, static electricity, ovens, furnaces or heaters. In addition, the surface temperature of equipment installed in Class I areas must not have an exposed surface temperature in excess of the ignition temperature of the surrounding gas or vapor. Use aluminum, bronze or plastic fan blades to reduce the possibility of sparks.

Fire Safety

Place clearly visible exit signs above all points of exit. A red, illuminated, translucent sign with "**EXIT**" in plain letters not less than 5" high is common in commercial facilities.

Make fire and spill control equipment readily available, including:

. Fire extinguisher.
. First-aid kit.
. Spill clean-up kit.

Locate a portable multi-purpose dry chemical fire extinguisher, having a rating not less than 20-B, on

the outside and not less than 10′ from the storage entrance door.

Include a non-spark type fire and/or smoke detector with audible alarm in the design. If possible, equip the alarm to sound at a remote site as well as the facility site.

Fire Suppression

In large facilities, automatic fire suppression systems may be a viable fire safety option. Types of fire protection systems include:

- Water sprinkler.
- Foams.
- Dry chemical.
- Inert gas.
- Carbon dioxide.
- Halon.
- Nitrogen.

Design fire suppression systems to be area specific so water is not spread across the entire facility due to a small fire in an isolated area. More damage may result from deluge type sprinkler systems than the fire itself. Cleanup of a contaminated site from a fire and the contaminated fire fighting water may be more costly than allowing the building to burn itself out. **NOTE:** Discuss the proper way to deal with a fire with the local fire official, emergency responders and the insurance carrier for each facility based on the types and volumes of products handled.

Ventilation

Ventilation minimizes a fire or explosion hazard by reducing the accumulation of significant quantities of ignitable or explosive vapors. Also, ventilation reduces worker-exposure to a hazardous level of fumes or dust from the pesticides during handling.

Provide ventilation at all times by natural or mechanical means. Warm-weather ventilation reduces temperature extremes and vapor buildup. Do not store pesticides in basements or below grade level where vapors might accumulate.

Natural Ventilation

Natural ventilation results from a combination of wind pressure and the natural buoyancy of warm air. Two or more inlet/outlet vents positioned on opposite walls allows cross ventilation. In unheated storage areas, natural ventilation may be the best alternative. In heated storage areas, natural ventilation is more difficult to control and heating costs may be high because of over ventilation.

Provide a minimum of two vents, each 8"x8" (64 in^2) on opposite sides of the building and within 12" of the floor because most flammable vapors are heavier than air. For larger buildings, design the size of the inlet/outlet vents to allow 6 air changes/hr. For mixing areas, size natural ventilation openings to provide 1 ft^2/20 ft^2 of floor area.

Mechanical Ventilation

Mechanical ventilation allows more control of the air quality and temperature in storage and handling facilities, especially in heated storage areas. Locate the fan on the east or south side of the room if possible. If the fan is placed high on the wall duct it to within 12" of the floor. Position air inlets opposite the fan and within 12" of the floor to remove heavier-than-air vapors.

Use explosion proof rated mechanical ventilation in areas where Class I liquids are dispensed from open containers. Use either natural or mechanical ventilation in other storage and mixing areas.

Mechanical Ventilation Rates

When mechanically ventilating pesticide storage areas during occupancy, provide at least 1 cfm/ft^2 of floor area or provide 6 air changes/hr. NFPA 30 recommends a minimum of 150 cfm for any size facility. When facilities are unoccupied, provide 1 air change/hr. (NFPA gives no recommendations for unoccupied storage areas.) Table 5 shows the required ventilation for various sizes of storage and handling areas. If a mechanical exhaust system is used, control it with a switch located outside of the storage area. The ventilation rate for larger buildings can be calculated using the following equation:

$$6 \text{ air changes/hr} \times \text{Building volume, ft}^3\text{/60 min} = \text{Ventilation rate, cfm}$$

Table 5. Mechanical ventilation rates and inlet size for pesticide storage and handling areas during occupancy.

Building[a] volume, ft^3	Six air changes/hr Rate, cfm	Six air changes/hr Inlet size, in^2	NFPA recommendation Rate of 1 cfm/ft^2 cfm	NFPA recommendation Rate of 1 cfm/ft^2 Inlet size, in^2
1,000	150[b]	30	150[b]	30
2,000	200	40	250	50
3,000	300	60	375	75
4,000	400	80	500	100
5,000	500	100	625	125
6,000	600	120	750	150
7,000	700	140	875	175
8,000	800	160	1,000	200
9,000	900	180	1,125	225
10,000	1,000	200	1,250	250

[a] Assumes a ceiling height of 8′.
[b] 150 cfm minimum recommended for any size facility, NFPA 30.

Multiple fans and inlets spaced at intervals along walls provide uniform air movement throughout storage and handling areas.

The NFPA 30 recommendation for ventilation of mixing and handling areas using Class I liquids (or Class II or III liquids above their flash points) is not less than 1 cfm/ft^2 of floor area. A higher ventilation rate may be required to limit flammable vapor-air mixtures during normal operating conditions.

Provide at least 25 cfm/occupant from an outside air source in pesticide storage areas where there are workers. Install a dedicated exhaust over work areas to minimize worker exposure to fumes. Consider a fume hood over work areas or sinks for worker safety; use a dedicated exhaust providing fresh air at a velocity of 80-100 fpm blowing at the face level.

In mixing and handling areas, equip ventilation systems with an alarm that sounds automatically in the event of a failure of the ventilation system. Provide a manual shutoff control for the ventilation system outside the room or building entrance.

Use a time delay switch to turn the fan and lights on but does not allow the door to be opened until the room has been ventilated adequately (at least one air change).

Duct exhaust away from work areas, offices or public areas to prevent human exposure to the exhaust air. Do not recirculate exhaust in the room or building, otherwise vapors and fumes can build up.

Air Inlets

Locate air makeup inlets on the opposite side of the room from the fan and also within 12" of the floor. If makeup air is taken from within the building, equip the inlet with a listed fire door or damper to prevent the spread of fire.

The air makeup inlet should provide 20 in^2/100 cfm capacity. Table 5 shows the area required for different ventilation system capacities. The inlet area can also be calculated using the following equation:

$$\text{Ventilation rate, cfm} \div 720 \text{ fpm} = \text{Inlet area, ft}^2$$

Heated Storage

An insulated, heated building may be needed if pesticides are subject to freezing. Some pesticides can freeze and remain viable while others may be rendered useless if frozen. **NOTE:** Read the label to determine the storage temperatures required for the products stored. In some areas, the storage building may require ventilation or even air conditioning in the summer to prevent pesticides from volatilizing and creating a safety hazard. A storage temperature range of 40 F-90 F for environmentally controlled storage is recommended.

Insulate the walls and ceiling and provide a continuous 6 mil vapor barrier on the warm side of the building, usually the inside wall. Minimum recommended insulation levels are R-11 for walls and R-19 for ceilings.

Do not place packages close to or in direct contact with heaters. Provide heat by low pressure steam, hot water or electric heaters that are U.L. listed for Class I hazardous locations. Never use or allow open flames or smoking in storage or handling areas.

Liquid Fertilizer Storage and Handling

Liquid fertilizer storage tanks must be inside a properly sized walled or bermed leak-proof secondary containment structure. Although it is not mandatory, liquid fertilizer storage should have locked security fencing to avoid vandalism damage. Keep tank drain valves locked except during transfers. See Chapter 7, Secondary Containment.

Impregnation of Pesticides on Dry Fertilizer

Large, dry bulk fertilizer storages are popular in the midwest. Design for ease of customer access and to keep precipitation away from the structure and area. Locate the building on elevated ground with all rain, snow melt or flood water diverted away. Consider railroad access when planning a facility, as it provides an economical means of transporting incoming dry fertilizer. Also, special handling equipment must be used due to the corrosiveness of the material. Fertilizer must be kept dry until used to avoid caking.

Impregnation of dry fertilizer with liquid herbicides has been done in fertilizer plants for a number of years. In the past, pesticides have usually been added to the fertilizer mix while in the blender. This creates problems with contamination of the blender and the immediate area, creating human safety problems.

Some problems that exist with impregnating pesticide on fertilizer granules are:

- Operator may be exposed to pesticide dust and fumes.
- Fertilizer with pesticide requires special handling after it leaves the blender.
- The blender, elevating equipment and applicating equipment require special cleaning.
- Adding pesticide to dry fertilizer may require the use of drying agents to reduce the problem of fertilizer caking.

One new method developed to impregnate pesticide on fertilizer is an impregnater that mounts on the blender unloading elevator. It adds the pesticide as it is being loaded into the applicator or service truck, eliminating contamination of the blender and elevator. The applicator or service tank must still be cleaned.

A newer impregnation method involves injecting pesticide into the fertilizer delivery tubes on pneumatic fertilizer applicators or the feed augers on other models. These systems use a peristaltic or variable displacement piston pump to continuously meter pesticide into each air delivery tube or feed auger on an applicator. This method helps reduce the equipment that comes in contact with the pesticide and must be

cleaned. Some pesticides work well with this method of impregnation while others do not. Impregnation of pesticides on the applicator is relatively new and has several advantages. Less equipment comes in contact with pesticides, the amount of fertilizer with pesticide impregnated on it at one time is reduced, and the impregnation takes place away from the storage and blending plant.

If impregnation of fertilizer is done at the blending plant, a catch/containment area must be provided to clean up spilled fertilizer. Alternatively tarping areas under impregnating equipment and conveyors allows easy cleanup of dry impregnated fertilizer. Excess pesticide impregnated fertilizer must be stored separately from fertilizer for later use because it is considered a pesticide.

7. SECONDARY CONTAINMENT[7]

Secondary containment refers to structures built around pesticide and fertilizer storage facilities to contain products that have escaped due to leaks, spills, fire, impacts, vandalism or ruptured tanks. Secondary containment is a safety back-up system designed to prevent pesticides and fertilizers from moving into the surrounding environment until site operators can clean up spills, secure the residual contaminated materials and repair damage.

Proper storage management, i.e. preventing or minimizing leaks, spills, etc., is the first and foremost defense against environmental contamination. But, when an accident occurs, the secondary containment is intended to be the safety net. Proper design and construction of a secondary containment is essential. Likewise, subsequent, routine inspection and maintenance are imperative if a containment is to function as intended when it must. See Chapter 12, Maintenance of Facilities.

Functional Containment Design Considerations

Place pesticide and pesticide rinsate storages in separate secondary containment areas from fertilizer storages. Do not allow pesticides to spill over into the fertilizer containment area. Large volumes of fertilizer contaminated with pesticide are difficult to dispose properly. Provide a separate containment area around valves, pumps and mixing tanks to catch small leaks and spills that inevitably occur in these areas on a regular basis. This eliminates the need to clean the entire secondary containment after precipitation spreads the leaked product throughout the area. This area could be inside the overall secondary containment and be separated by a 6"-12" high curb to catch the small amount of leakage plus any precipitation. Buckets or pans placed under valves, pumps and other working areas can also serve this purpose, but their placement must be routine and they must be anchored against wind or flotation movement. A separate concrete or portable, impervious containment for catching routine leaks from transfer pumps and mixing equipment is especially important for earthen containments around fertilizer storage.

Slope secondary containment floors to a single sump or low point at a 1% slope so precipitation can be easily pumped out. Do not use gravity drain pipes unless equipped with spring-loaded valves supervised during draining. Do not use automatic sump pumps to discharge outside of secondary containment areas. Some states may allow automatic sump pumps to transfer to a storage tank within a secondary containment area. Equip sump pumps with automatic cutoff switch to prevent overfills. Liquids in a secondary containment must be checked for contamination before discharging them.

Do not allow adjacent roofs to drain into the secondary containment area. Remove precipitation from the secondary containment immediately after it has been determined that it is not contaminated. **NOTE:** Never let precipitation accumulate. If precipitation is contaminated, dispose it according to nature of product(s) involved, see Chapter 11, Rinsate Management and Waste Disposal.

Additional floor area may be required to allow adequate floor space for present and future tanks plus mixing and transfer equipment in the proposed containment area. Space may also be needed for replacement of existing tanks by larger diameter tanks in the future. Workers need space to move between tanks with hoses and move over containment walls without undue risk or hazards. Locate tanks at least 3′ away from walls. If possible, orient tank weld seams toward the interior of the containment area and orient tank outlet valves toward the center of the containment area in case there is a plumbing weld failure.

Frost Heaving

Damage from frost heaving can make a secondary containment nonfunctional. Damage occurs from heaving of the frozen ground due to ice lenses (layers of water that freeze and expand) forming in the soil, followed by collapse of the ground after the ice lenses thaw. For frost heave to occur, freezing temperatures, water and a frost-susceptible soil must be present. If possible, locate the facility on a site with excellent natural surface drainage away from the containment. Provide runoff diversions and/or drainage around the secondary containment to keep water from entering the subgrade or base materials. Provide gutters and/or curbs to keep runoff from nearby buildings or lots away from the site.

Tank Seats

It is beneficial to elevate metal storage tanks a few inches above the secondary containment floor to keep the tank bottom dry, to prevent corrosion and to allow the manager to check for leaks. One method of elevating tanks is to place them on a bed of smooth, rounded stones, Fig 15. This method also allows the tank to be easily leveled on containment floors that slope to a sump, but is more difficult to clean after a spill.

---

7 Gerald L. Riskowski, Agricultural Engineering Department, University of Illinois at Urbana-Champaign; Ronald T. Noyes, Agricultural Engineering Department, Oklahoma State University, Stillwater.

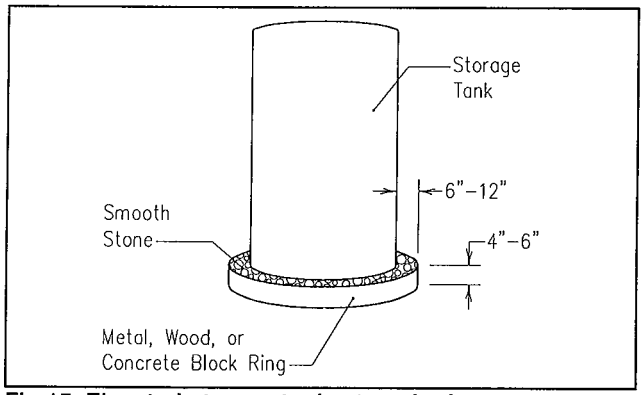

Fig 15. Elevated storage tank, stone bed.

Another method is to lay preservative treated 2x6 boards flat on the floor spaced a few inches apart with the boards oriented parallel to floor slope. Set the storage tank on the boards.

Another approach is to place the structural concrete floor as a unit, then place an additional 4" thick concrete pad on top of the structural floor for elevating the tanks. Extend the tank pads about 2′ beyond the edges of the tank. If storage tanks are in a diked secondary containment, place a synthetic liner under 4"-6" of smooth rock and slope to a low point so leaks can be detected, Fig 16.

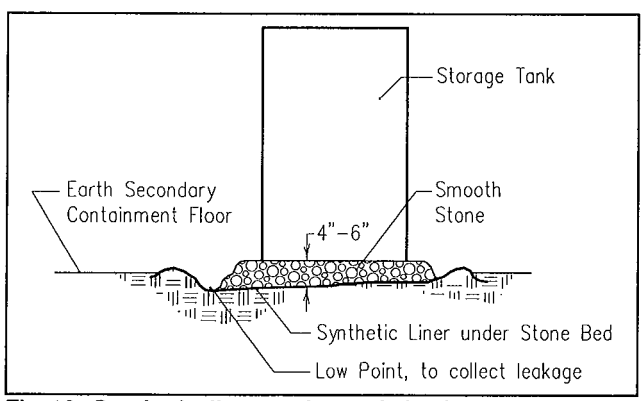

Fig 16. Synthetic liner under tank for leak containment and detection.

Slope the liner at about 1.5%-2% towards the low point.

Tank Anchoring

Attach tanks to solid anchors to prevent flotation when fluids are in the secondary containment. However, some anchorage for wind resistance against empty tanks or precipitation on empty tanks is recommended. Tank anchors and connections must be adequate to resist the tremendous flotation forces encountered when a tank is forced upward by liquid in the secondary containment.

Upward forces due to flotation are equal to the weight of the fluid displaced by the empty portion of tank that is below the fluid level minus the empty tank weight. Flotation force can be calculated by:

$$FF = FD \times VD - TW$$

Where:

FF = Flotation force, lb
FD = Fluid density of fertilizer, typically 70-85 lb/ft^3
VD = Volume of fluid displaced by the tank, ft^3. Table 6 gives displacement volumes/ft of height of various tanks. Fig 17 gives equations for tank volumes.
TW = Empty tank weight, lb

When calculating flotation force, assume the worst conditions. Assume one tank is empty when another tank leaks and assume that the secondary containment will be completely filled by the leaked fluid and precipitation. In some cases, allowances may be made for tanks that will always have some product left in them. Check your local regulations to determine if such allowances are permitted. Flotation forces can be reduced by elevating the tank and/or using cone bottom tanks, because less fluid volume is displaced. Elevated cone bottom tanks are popular for handling many products because they have fewer flotation problems and all of the product can be easily removed from the tank.

Anchor tanks directly to bolts set in a concrete floor or anchor with cables fastened to restraints outside the containment area. When fastening anchor plates to the base of the tank and bolting them to a concrete floor or pad, several anchors may be required to resist the force. The anchoring strength of a properly sized anchor bolt is limited by the tensile strength of the concrete unless the anchor bolt is well fastened to the reinforcing steel in the concrete. Check with the anchor bolt manufacturer for design loads to determine the number required and distribute them evenly around the base of the tank. Do not place anchor bolts closer than twice the concrete floor thickness (e.g. for an 8" thick floor, the minimum

Table 6. Volume of vertical cylindrical tanks.

	Volume, ft^3		Volume, gal	
Diameter, ft	Per foot of height	Per inch of height	Per foot of height	Per inch of height
4	12.57	1.05	94.00	7.83
5	19.63	1.64	146.87	12.24
6	28.27	2.36	211.49	17.62
7	38.48	3.21	287.86	23.99
8	50.27	4.19	375.99	31.33
9	63.62	5.30	475.86	39.65
10	78.54	6.54	587.48	48.96
11	95.03	7.92	710.85	59.24
12	113.10	9.42	845.97	70.50
13	132.73	11.06	992.84	82.74
14	153.94	12.83	1,151.46	95.95
15	176.71	14.73	1,321.83	110.15
16	201.06	16.76	1,503.94	125.33
17	226.98	18.92	1,697.81	141.48
18	254.47	21.21	1,903.43	158.62
19	283.53	23.63	2,120.79	176.73
20	314.16	26.18	2,349.91	195.83

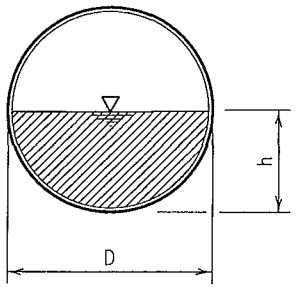

L = Tank Length

Horizontal cylindrical tank fluid volume:

$$V = [D^2 \div 4 \times \mathrm{Cos}^{-1} \times ((D - 2 \times h) \div D) \div 57.3 - (D \div 2 - h) \times (D \times h - h^2)^{1/2}]\, L$$

Spherical tank volume:

$$V = 1.0472 \times h^2 \times (1.5 \times D - h)$$

17a. Horizontal cylindrical or spherical tank volume (V, ft^3).

Horizontal cylindrical tank volume equation is for fluid levels below half full. For fluid levels above half full, calculate the air volume and subtract from the total tank volume.

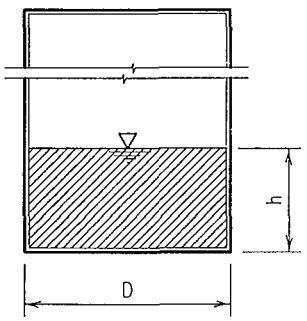

$$V = 0.7854 \times D^2 \times h$$

17b. Vertical cylindrical tank volume (V, ft^3).

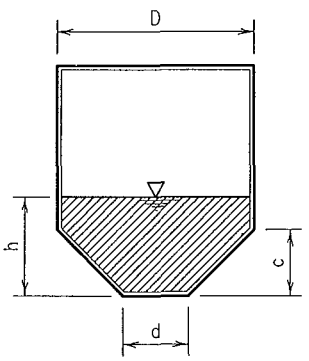

Fluid level above cone:

$$V = 1.0472 \times h \times (D^2 + d^2 + D \times d) + 0.7854 \times D^2 \times (h - c)$$

Fluid level within cone:

$$V = 1.0472 \times h \times (K^2 + d^2 + K \times d)$$

Where: $K = h \div c \times D + d \times (1 - h \div c)$

17c. Cone bottom vertical tank volume (V, ft^3).

Fig 17. Equations for tank volumes.
All tank dimensions are in feet.

spacing for anchor bolt is 16"). Bolt placement in the concrete has to be precise to match up with the holes in the tank anchor plates.

Use cables to tie down vertical tanks in at least three equally spaced locations (i.e., 120° apart around the tank circumference) to prevent the tank from shifting out of place. The cable and the connections of the cable to the tank and the ground anchor need to be strong enough to resist its portion of the flotation force. Typical cable strengths and cable connections are given in Tables 10 and 11. The cable connections shown can only develop 80% of the strength of the cable, so only 80% of the cable strength can be used in design. Use these tables as guidelines only; use cable strength specifications from the cable supplier for design. The cables typically run at an angle from the tank to the anchor, which increases the force on the cable, the cable connections and the anchors. The cable force must be increased by the percentages outlined in Table 12 depending on the angle of the cable with respect to the tank side wall.

One alternative is to anchor the cables to rebar anchors embedded in concrete floors. The length of the horizontal rebar within the concrete is critical, see Fig 19 and Table 13 for designs. Another alternative is to anchor the cable to containment concrete walls, Fig 20. Use enough concrete anchor bolts for connecting the bracket to the wall to resist the shear force transferred to it by the cable. Earthen dike secondary containments create a problem because the soil anchor must not penetrate the clay or synthetic liner. Extend cables to soil anchors outside of the containment area, Fig 21, or attach cables to concrete weights that set on the secondary containment floor, Fig 18.

See Table 14 for designs of concrete weights. In all cases, cables must be kept tight so tanks can not shift.

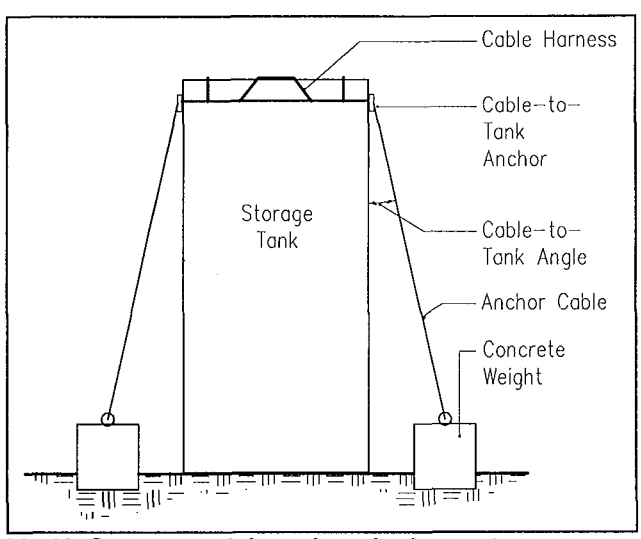

Fig 18. Concrete weight tank anchoring system.

Table 7. Volume of horizontal cylindrical tanks, cu. ft.

Fluid level, ft	Diameter, ft 4	6	8	10	12	14	16
	Volume, ft³/ft of length						
0.5	0.91	1.13	1.31	1.47	1.61	1.74	1.87
1.0	2.46	3.10	3.63	4.09	4.50	4.88	5.23
1.5	4.30	5.53	6.52	7.39	8.16	8.86	9.52
2.0	6.28	8.25	9.83	11.18	12.39	13.49	14.51
2.5	8.26	11.15	13.42	15.35	17.07	18.63	20.06
3.0	10.11	14.14	17.22	19.82	22.11	24.19	26.10
3.5	11.66	17.12	21.14	24.50	27.44	30.10	32.53
4.0	12.57	20.02	25.13	29.34	33.00	36.29	39.31
4.5		22.75	29.12	34.28	38.74	42.73	46.37
5.0		25.18	33.05	39.27	44.60	49.35	53.68
5.5		27.15	36.85	44.26	50.56	56.13	61.19
6.0		28.27	40.44	49.20	56.55	63.02	68.87
6.5			43.74	54.04	62.54	69.97	76.67
7.0			46.64	58.72	68.49	76.97	84.57
7.5			48.96	63.19	74.36	83.96	92.54
8.0			50.27	67.36	80.10	90.92	100.53
8.5				71.15	85.66	97.81	108.53
9.0				74.45	90.99	104.58	116.49
9.5				77.07	96.03	111.21	124.39
10.0				78.54	100.71	117.65	132.19
10.5					104.94	123.84	139.87
11.0					108.60	129.75	147.38
11.5					111.48	135.31	154.69
12.0					113.10	140.45	161.75
12.5						145.07	168.53
13.0						149.06	174.96
13.5						152.19	181.00
14.0						153.94	186.56
14.5							191.54
15.0							195.83
15.5							199.19
16.0							201.06

Table 8. Volume of horizontal cylindrical tanks, gal.

Fluid level, ft	Diameter, ft 4	6	8	10	12	14	16
	Volume, gal/ft of length						
0.5	6.78	8.42	9.78	10.98	12.06	13.05	13.97
1.0	18.38	23.17	27.13	30.57	33.67	36.51	39.14
1.5	32.20	41.35	48.80	55.26	61.03	66.31	71.19
2.0	47.00	61.71	73.51	83.64	92.68	100.90	108.50
2.5	61.80	83.41	100.38	114.85	127.68	139.33	150.08
3.0	75.62	105.75	128.78	148.23	165.39	180.92	195.21
3.5	87.21	128.08	158.15	183.25	205.26	225.11	243.34
4.0	94.00	149.78	187.99	219.44	246.85	271.47	294.02
4.5		170.15	217.83	256.40	289.76	319.61	346.87
5.0		188.32	247.20	293.74	333.64	369.17	401.53
5.5		203.07	275.60	331.08	378.16	419.86	457.72
6.0		211.49	302.48	368.04	422.98	471.37	515.13
6.5			327.18	404.23	467.81	523.41	573.51
7.0			348.86	439.25	512.33	575.73	632.60
7.5			366.20	472.63	556.21	628.04	692.17
8.0			375.99	503.83	599.12	680.09	751.97
8.5				532.22	640.71	731.60	811.77
9.0				556.90	680.58	782.28	871.34
9.5				576.50	718.28	831.85	930.43
10.0				587.48	753.29	879.99	988.81
10.5					784.93	926.35	1,046.23
11.0					812.30	970.54	1,102.41
11.5					833.91	1,012.12	1,157.08
12.0					845.97	1,050.55	1,209.92
12.5						1,085.15	1,260.60
13.0						1,114.95	1,308.73
13.5						1,138.41	1,353.86
14.0						1,151.46	1,395.44
14.5							1,432.75
15.0							1,464.81
15.5							1,489.97
16.0							1,503.94

Table 9. Volume of spherical tanks.

Diameter, ft	Fluid level, ft	Volume, ft³	Volume, gal
4	0.50	1.44	10.77
	1.00	5.24	39.17
	1.50	10.60	79.31
	2.00	16.76	125.33
	2.50	22.91	171.35

Table 9. Volume of spherical tanks (continued).

Diameter, ft	Fluid level, ft	Volume, ft³	Volume, gal
	3.00	28.27	211.49
	3.50	32.07	239.89
	4.00	33.51	250.66
6	0.50	2.23	16.65
	1.00	8.38	62.66
	1.50	17.67	132.18
	2.00	29.32	219.33
	2.50	42.54	318.22
	3.00	56.55	422.98
	3.50	70.55	527.75
	4.00	83.78	626.64
	4.50	95.43	713.79
	5.00	104.72	783.30
	5.50	110.87	829.32
8	0.50	3.01	22.52
	1.00	11.52	86.16
	1.50	24.74	185.06
	2.00	41.89	313.32
	2.50	62.18	465.09
	3.00	84.82	634.48
	3.50	109.04	815.62
	4.00	134.04	1,002.63
	4.50	159.04	1,189.64
	5.00	183.26	1,370.78
	5.50	205.91	1,540.17
	6.00	226.19	1,691.94
	6.50	243.34	1,820.20
	7.00	256.56	1,919.09
	7.50	265.07	1,982.74
	8.00	268.08	2,005.26
10	0.50	3.80	28.39
	1.00	14.66	109.66
	1.50	31.81	237.93
	2.00	54.45	407.32
	2.50	81.81	611.96
	3.00	113.10	845.97
	3.50	147.52	1,103.48
	4.00	184.31	1,378.61
	4.50	222.66	1,665.50
	5.00	261.80	1,958.26
	5.50	300.94	2,251.02
	6.00	339.29	2,537.90
	6.50	376.07	2,813.04
	7.00	410.50	3,070.55
	7.50	441.79	3,304.56
	8.00	469.14	3,509.20
	8.50	491.79	3,678.59
	9.00	508.94	3,806.86
	9.50	519.80	3,888.12
	10.00	523.60	3,916.52
12	0.50	4.58	34.27
	1.00	17.80	133.16
	1.50	38.88	290.80
	2.00	67.02	501.31
	2.50	101.45	758.83
	3.00	141.37	1,057.46
	3.50	186.01	1,391.34
	4.00	234.57	1,754.60
	4.50	286.28	2,141.36
	5.00	340.34	2,545.74
	5.50	395.97	2,961.87
	6.00	452.39	3,383.87
	6.50	508.81	3,805.88
	7.00	564.44	4,222.01
	7.50	618.50	4,626.39
	8.00	670.21	5,013.14
	8.50	718.77	5,376.40
	9.00	763.41	5,710.28
	9.50	803.33	6,008.92
	10.00	837.76	6,266.43
	10.50	865.90	6,476.94
	11.00	886.98	6,634.58
	11.50	900.20	6,733.48
	12.00	904.78	6,767.74

Table 10. Tensile strength of some common 7-strand galvanized steel wire, lb.
Use this table as a guideline only, use specifications from the cable supplier for design.

Type	Diameter, in. 3/16	1/4	5/16	3/8	7/16	1/2	5/8
	Tensile strength, lb						
Siemens-Martin	1,900	3,150	5,350	6,950	9,350	12,100	19,100
High-strength	2,850	4,750	8,000	10,800	14,500	18,800	29,600
Extra-high strength	3,990	6,650	11,200	15,400	20,800	26,900	42,400

Table 11. Number of clips and spacing for steel wire connections.
Use these tables as guidelines only, use specifications from the cable supplier for design.

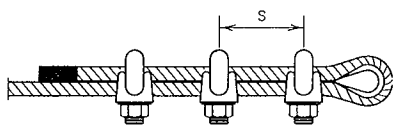

Wire diameter, in.	Ubolt diameter, in.	Minimum no. clips for each wire end	Maximum spacing of clips, in.[a]
3/16	11/32	2	2
1/4	7/16	2	2
5/16	1/2	2	2
3/8	9/16	2	2 1/4
7/16	5/8	2	2 5/8
1/2	11/16	3	3
5/8	3/4	3	3 3/4

[a]Maximum spacing of clips (s) from figure above.

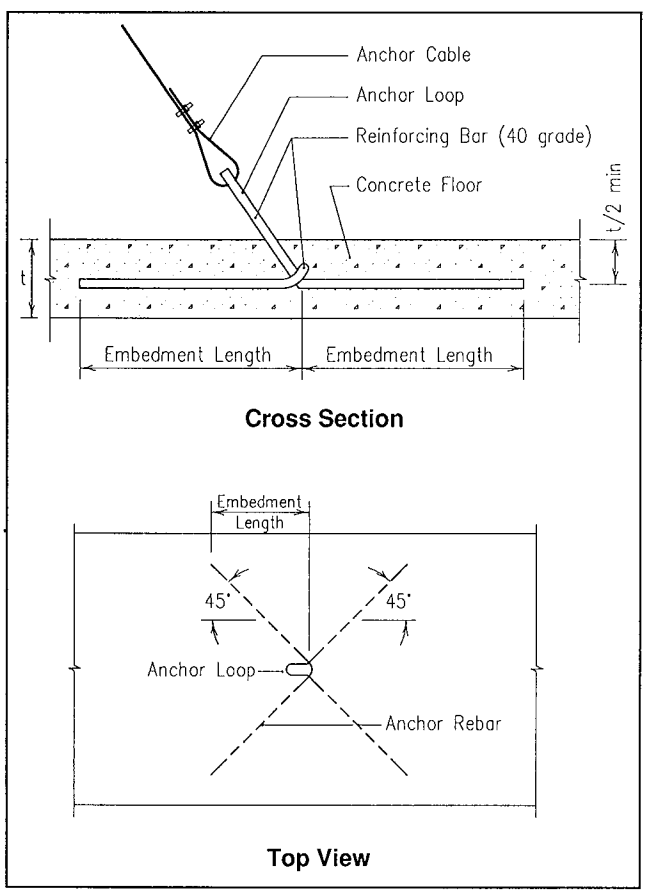

Fig 19. Reinforcing bar anchors in concrete floor.
Use 40 grade steel for the anchor and make the bending diameter at least six times the bar diameter.

Table 12. Cable force increase at various cable-to-tank angles.
Increase cable force by the table value for the given cable-to-tank angle. See Fig 18 for angle definition.

Angle, °	Cable force increase, %
10	2
15	4
20	7
25	11
30	16
35	23
40	31
45	42

Table 13. Embedment lengths and load capacities for rebar floor anchors.
See Fig 19. This table assumes at least an 8" thick concrete floor with two layers of steel reinforcement as shown in Fig 65.

Bar size	Bar diameter, in.	Embedment length, in.	Anchor capacity, lb	Minimum closest anchor spacing, ft
#3	3/8	12	2,400	5
#4	1/2	12	4,300	7
#5	5/8	12	6,700	9
#6	3/4	14	9,700	10
#7	7/8	18	13,200	12
#8	1	24	17,200	14

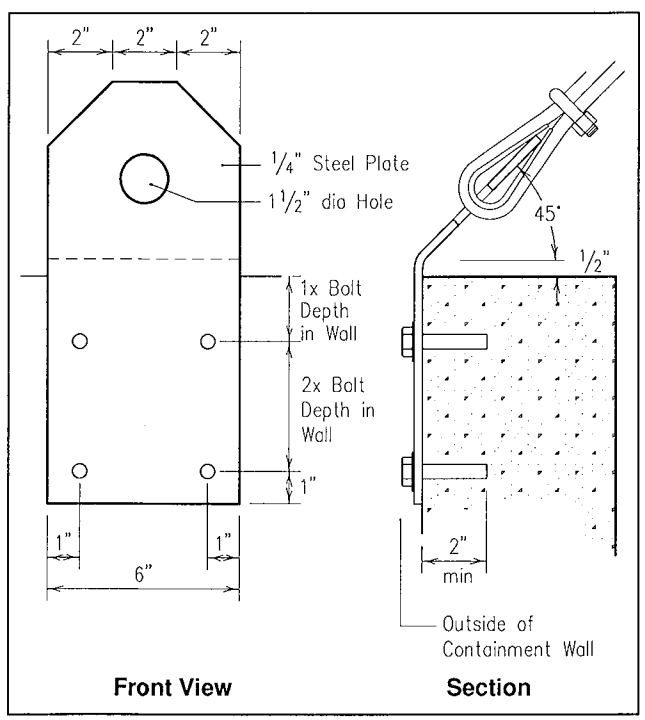

Fig 20. Concrete wall anchor for cable tie-downs.
Use enough bolts to resist the expected load. Base bolt strength on manufacturers' product information.

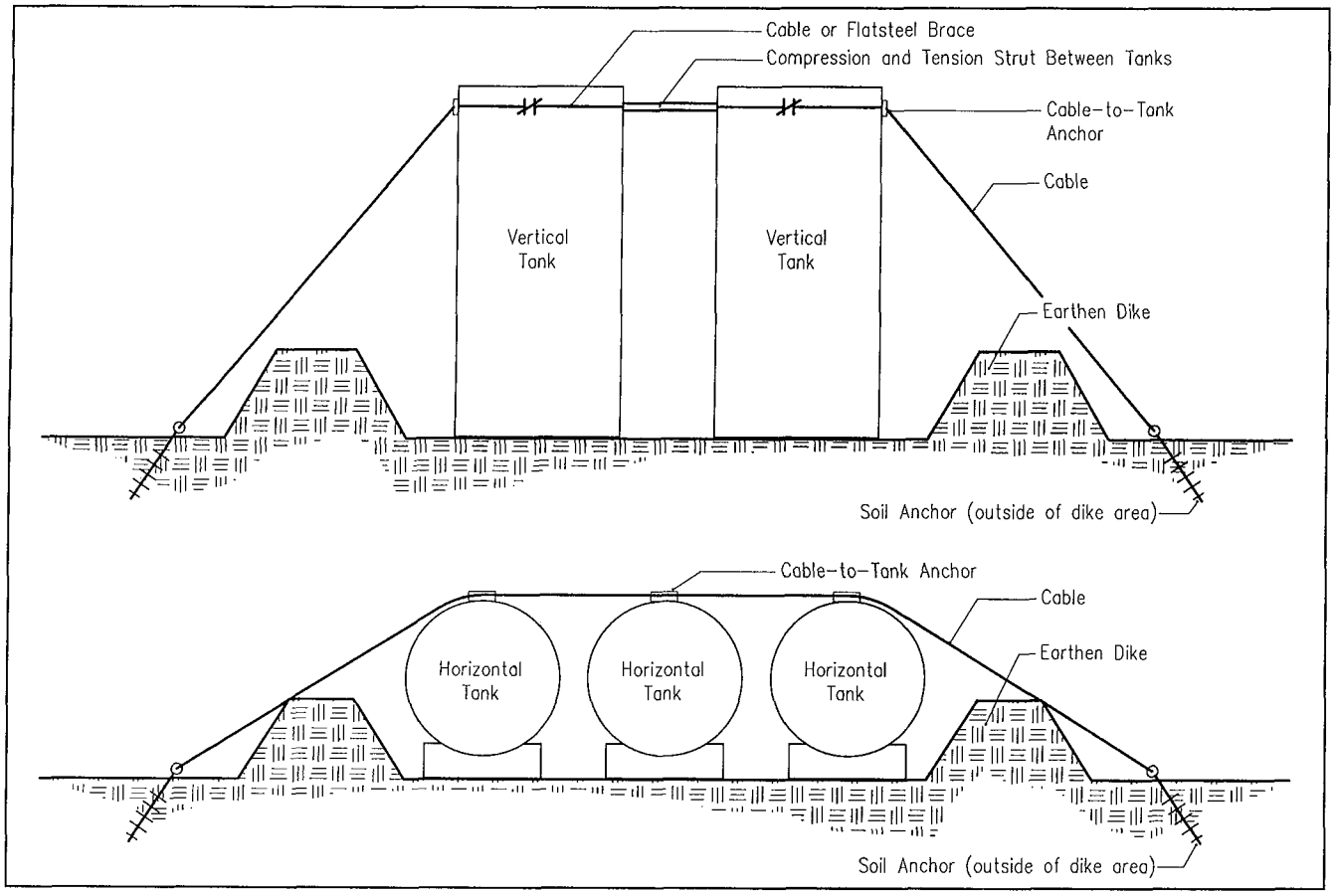

Fig 21. Cable anchors outside of earthen dike area.

Containment Wall Height

Recommended containment wall height is 3′ because workers can easily see and step over a 3′ high wall. Higher walls increase tank anchoring requirements and the risk of pipe ruptures due to tank flotation. In general, a 3′ containment wall height is safer, more practical and functional than a deeper wall although it may be slightly more expensive due to the additional concrete required for a larger slab. If a higher wall is selected, wide steps with hand rails on both sides of the wall at security fence gate openings may be an adequate solution for worker safety, comfort and convenience. However, safety steps over walls present a continual problem for workers, especially in icy conditions.

Run pipes over containment walls rather than through them. It is difficult to seal around pipes that go through walls and very difficult to ensure the integrity of a seal throughout a facility's life. Holes in concrete lead to cracks.

Provide at least 3′ between tanks or between a tank and a containment wall to allow visual inspection of the tanks by walking completely around them. More space may be needed between some of the tanks to allow room for pipes, pumps and valves, Fig 22. Workers should not have to climb over piping to get between tanks.

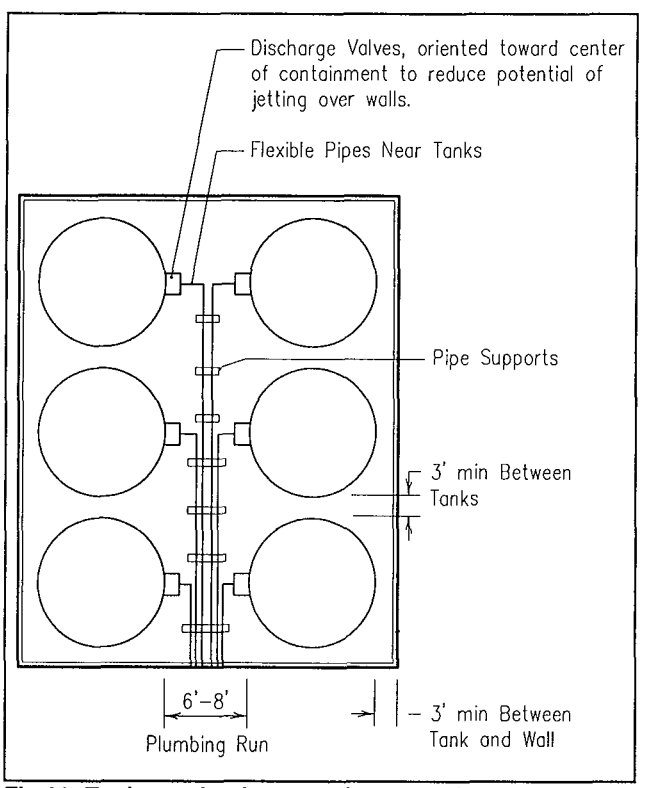

Fig 22. Tank spacing in secondary containment.

Table 14. Concrete weight design.

Use 40 grade steel and make bending diameter at least six times bar diameter.

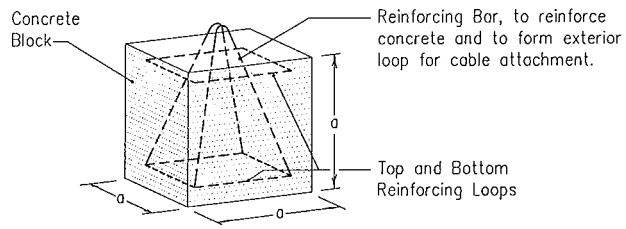

Cube dimension, ft[a]	Rebar size	Restraint provided, lb Fluid level around block[b] None (R_o)	Submerged (R_s) (100 lb/ft^3)	Submerged (R_s) (70 lb/ft^3)
1	#3	150	50	80
1.5	#3	505	165	270
2	#3	1,200	400	640
2.5	#3	2,340	780	1,250
3	#3	4,050	1,350	2,160
3.5	#4	6,430	2,140	3,425
4	#5	9,600	3,200	5,120
4.5	#6	13,665	4,555	7,290
5	#6	18,750	6,250	10,000
5.5	#7	24,955	8,315	13,300
6	#8	32,400	10,800	17,280

[a]Cubed dimension (a) in figure above.

[b]If the blocks are in the containment area, the spilled fluid will tend to float the block. Submerged values are based on a fluid density of 100 lb/ft^3 and 70 lb/ft^3. Use linear interpolation to determine restraint if fluid level is part way up the block as follows:

$$R_h = R_0 - [(a - h) \div a \times (R_0 - R_S)]$$

Where:

R_h = Restraint with fluid level at h, lb
R_0 = Restraint with no fluid, lb
R_S = Restraint when block submerged, lb
a = Block dimension, ft
h = Fluid level from block bottom, ft

Storage Tank Plumbing

Use flexible hoses at the pipe-to-tank connection to prevent potential plumbing rupture if one tank floats or shifts. If rigid steel plumbing between storage tanks is used and a rupture of multiple tanks occurs, the secondary containment could overflow.

Elevated pipes are easier to maintain; support them with concrete blocks, wood or steel frames or other attachments. Do not exceed dimensions for intervals specified in Table 15. Run rigid steel pipe to a deck for loading and unloading of pesticides and fertilizers. Do not place rigid pipe near traffic lanes where it is subject to damage by vehicles. Protect rigid pipe from vehicles with steel posts or high curbs. Use flexible hose from rigid pipe to vehicles. Individual pipes are preferred on liquid fertilizer transfer plumbing to eliminate drips when hoses are switched from tank to tank.

Do not install pesticide and fertilizer plumbing lines under secondary containment slabs, concrete floors or inaccessible areas.

Electrical Systems

Elevate electrical items (motors, wiring, controls, etc.) off the containment floor so they do not become submerged during precipitation. Ideally, place electrical components above the top of the secondary containment wall so they are not submerged during a spill. Use GFCI on all electric circuits within secondary containment and other parts of pesticide and fertilizer handling facilities (per NFPA, NEC). See Chapter 6, Pesticide and Fertilizer Storages.

Table 15. Maximum pipe span between supports.

Pipe material	Nominal diameter, in.	Maximum span, ft
Mild steel	2	10
	2.5	11
	3	12
	3.5	13
	4	14
	5	15
	6	17
PVC, Schedule 40	2	4
	3	5
	4	6
	5	8
	6	10

Fencing

Vandalism and theft can be major problems for pesticide and fertilizer storage areas. Use fences or buildings to prevent unauthorized entry to the secondary containment and to protect children, pets and other animals from accidental entry. Fencing is required to secure rinsate tanks, pesticide mixing/loading equipment and empty pesticide containers held for disposal, unless the entire facility is enclosed inside a secured building. Place all valves, pipes and pumps inside the fence or building, if possible. Otherwise, lock valves when they are not supervised.

Select security fencing that is a minimum of 6′ high and of 12-gauge hardened steel wire mesh with 3"x3" diagonal opening. Install fencing flush with the outside face of concrete secondary containment walls so there is no foothold and to form a minimum combined height of 6′. Use fence gates of a rigid steel frame and wire fence mesh with maximum openings of 1"-2" between the fence posts and gate, and the concrete. When fence posts are placed into the top of a concrete wall, they create a weak area that causes cracks in the concrete. Attach fence posts to brackets bolted to the outside of the wall, Figs 24 and 25. Use open mesh fencing so workers can easily inspect the containment area.

Sizing

Secondary containment facilities must be large enough to hold all pesticide or fertilizer leakage from the largest storage tank, plus any other items that occupy volume within the containment area, such as other storage tanks, pumps, mixing equipment, concrete anchor blocks and precipitation that falls within

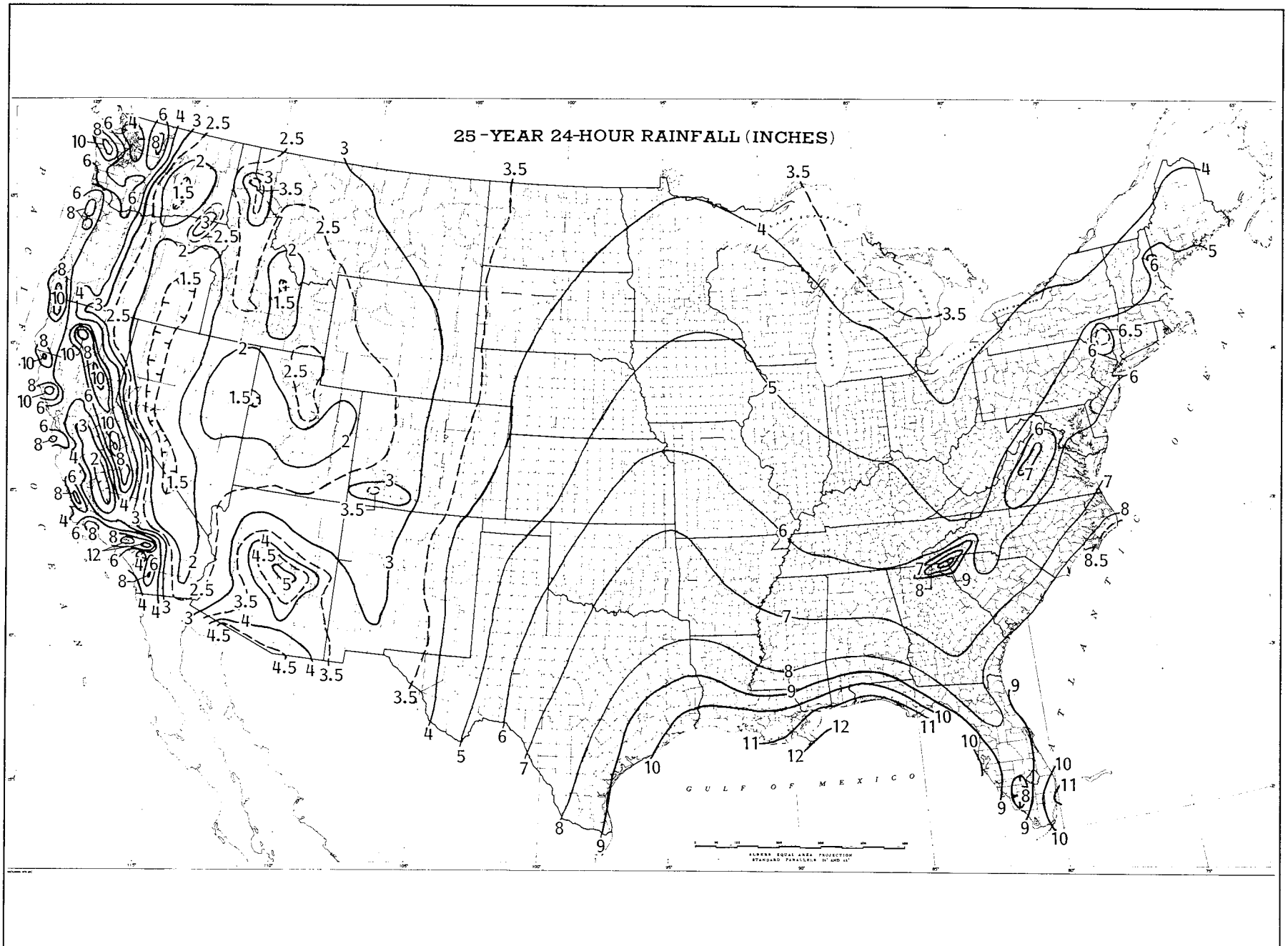

Fig 23. 25-yr, 24-hr rainfall, in.

the containment area. Secondary containments are usually designed to hold at least the volume of the largest tank plus volumes displaced by bases of other tanks and equipment in the containment (e.g. the amount of liquid displaced by the bottom portion of tanks below designed liquid levels within the secondary containment facility). Some regulations require that the secondary containment capacity (compensating for volume displaced by tanks and other equipment) exceed that of the largest tank by 10%-25% to provide freeboard for rainfall. Some states require a volume equal to the largest tank plus a 6" or more rainfall. This rainfall freeboard is usually from a 25-yr 24-hr rainfall event, Fig 23. Note that a 6" rain raises the liquid level more than 6", possibly 9"-12", due to floor area displaced by tanks and equipment in the containment area. However, this extra capacity may be reduced if a roof diverts precipitation from part or all the containment area.

Calculation of Secondary Containment Size

Containments with vertical tanks only

For vertical storage tanks, which are not elevated above the containment floor, calculate the required containment floor area (CFA) dimensions inside containment walls by:

$$CFA = LTV \times FF \div CVD + TBA$$

Where:

- CFA = Containment floor area, ft^2 dimensions inside containment walls. For vertical tanks only.
- LTV = Largest tank volume, ft^3. A full tank is assumed. To convert gallons to ft^3, 1 ft^3 = 7.5 gal.
- FF = Freeboard factor, 1.1 for 110% of largest tank, 1.25 for 125% of largest tank.
- CVD = Secondary containment depth, ft
- TBA = Sum of the tank base areas, ft^2. Do **not** include the tank base area of the largest tank because it is included in LTV. Values for individual tank base areas are in Table 6 (use the ft^3/ft of depth values).

Some states do not have a freeboard factor but require additional volume for precipitation. In that case, calculate CFA with:

$$CFA_p = (LTV + TBA \times CVD) \div (CVD - PR \div 12)$$

Where:

- CFA_p = Containment floor area with additional area for precipitation, ft^2. For vertical tanks only.
- PR = Design precipitation depth, in.

A tank setting on a solid base, such as rocks or boards, is not considered elevated because the base support takes up volume. These calculations do not allow for volume taken up by equipment in the containment area. If the volume of equipment is signif-

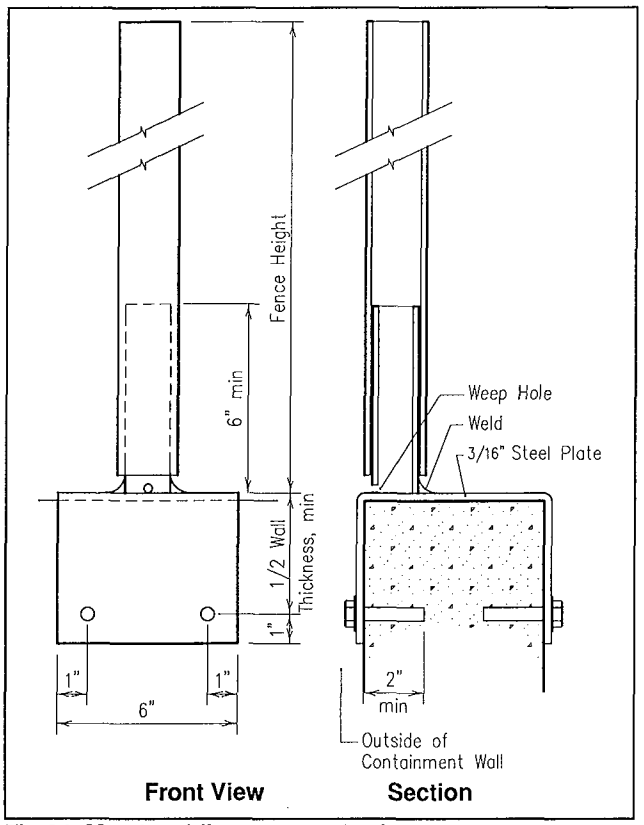

Fig 24. Metal saddle supports for fence posts.

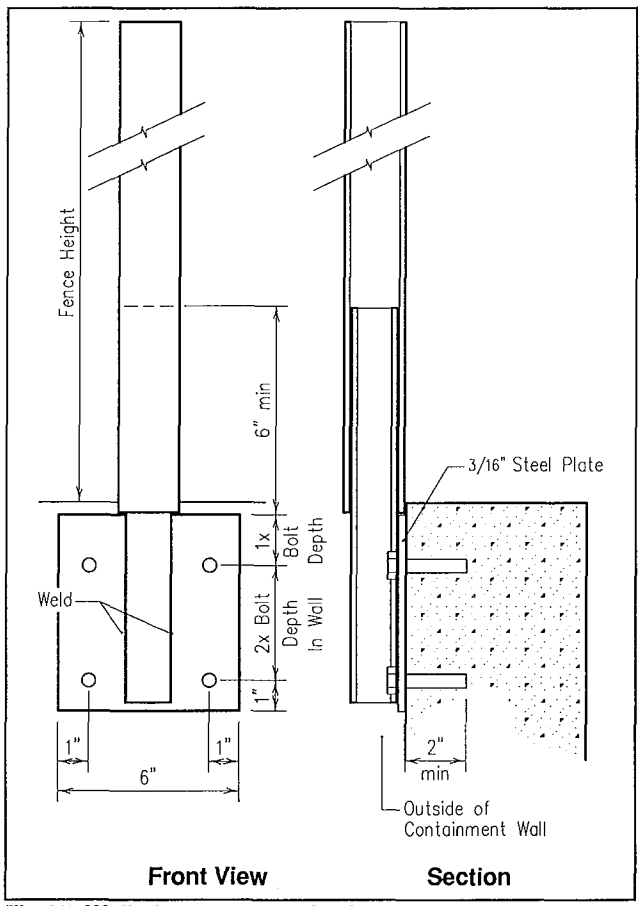

Fig 25. Wall plate supports for fence posts.

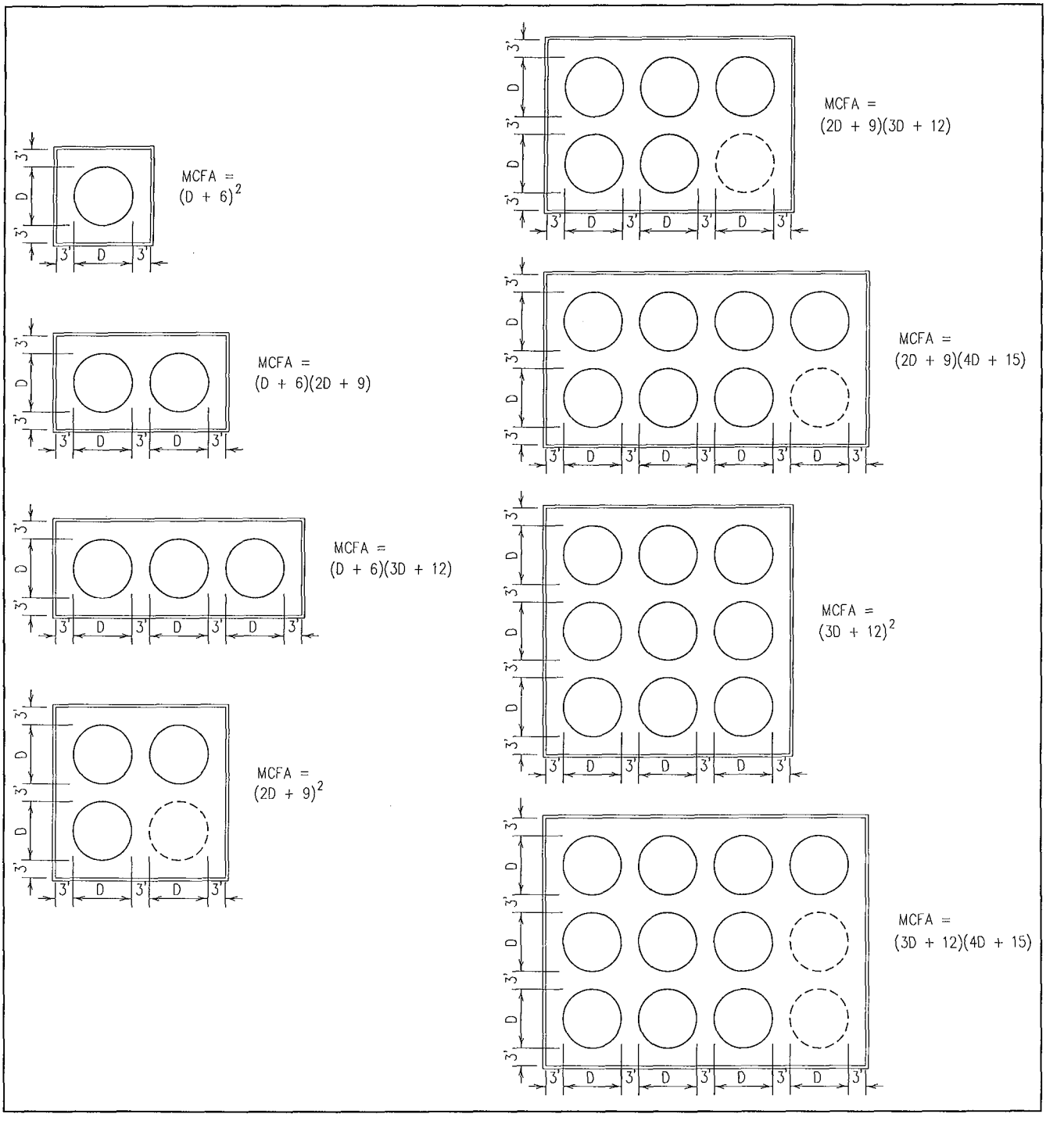

Fig 26. Minimum containment floor areas (MCFA) to provide adequate tank clearance.
D = Tank diameter, ft. Inside dimensions are for a 3′ space between tanks and between tank and wall. For vertical tanks, all the same diameter.

icant, add additional area. Note that the containment floor area required may be larger than that calculated due to the 3′ recommended clearance space between tanks and between tanks and walls. The minimum secondary containment floor area (MCFA) required to provide space for tank area plus 3′ between each tank and the walls can be determined for several common layouts from Fig 26. MCFA is calculated based on dimensions inside containment walls. Fig 26 is for containment areas with vertical storage tanks, all the same diameter. Even though an operation presently has 8′ and 12′ diameter tanks, it may require all 12′ diameter tanks later. It is best to design a containment area for all large tanks to allow flexibility for future changes in the facility. Tables 17-19 give CFA values for containments with vertical storage tanks of the same diameter.

Containments with non-vertical or elevated tanks

For containments that have some tanks other than vertical tanks or some of the tanks are elevated, calculate containment floor area (CFA) by:

$$CFA = (LTV \times FF + TBV) \div CVD$$

Where:

TBV = Sum of the tank base volumes, ft^3. Do **not** include the base volume of the largest tank because it is included in LTV.
= $BV_1 + BV_2 + ... + BV_n$

BV = Base volume of an individual tank, ft^3

To determine BV:

For vertical tanks:

BV = VPF × (CVD - TBE)

VPF = Volume/unit of depth, ft^3/ft of depth. Determine from Table 6 or the equation in Fig 17.

TBE = Tank base elevation, ft. For tanks setting on the floor or a solid base (e.g. rocks), TBE=0.

For horizontal tanks:

BV = The tank volume given in Table 7 or calculated from the equation in Fig 17 at a fluid level of (CVD - TBE).

For spherical tanks:

BV = The tank volume given in Table 9 or calculated from the equation in Fig 17 at a fluid level of (CVD - TBE).

For vertical tanks with cone bottoms:

BV = The tank volume calculated from the equation in Fig 17 at a fluid level of (CVD - TBE).

Example 1:

All vertical tanks. A liquid fertilizer dealer has two 12′ dia. × 20′ high, three 10′ dia. × 15′ high, and two 9′ dia. × 15′ high storage tanks. The dealer is trying to decide between a 2′ and a 3′ containment wall height. An additional 25% of the largest tank is required for freeboard because no roof covers the containment area (i.e. FF=1.25).

From Table 6, the largest tank volume LTV = 113.1 ft^3/ft of depth × 20′ = 2,262 ft^3. Now determine the area of the bases of the other tanks in the containment area, TBA:

$$TBA = 113.1 + 3 \times 78.54 + 2 \times 63.62$$
$$= 476\ ft^2$$

Next calculate containment floor area (CFA), for each of the two containment depths. For 3′ depth:

$$CFA = LTV \times FF \div CVD + TBA$$
$$= 2{,}262 \times 1.25 \div 3 + 476$$
$$= 1{,}419\ ft^2$$

For 2′ depth:

$$CFA = 2{,}262 \times 1.25 \div 2 + 476$$
$$= 1{,}890\ ft^2$$

The volume displaced by transfer pumps and mixing tanks is assumed insignificant and is ignored in this example, if large mixing tanks, transfer tanks or concrete horizontal tank supports are to be placed in the containment area, their displacement area and volume below the containment wall level must be included.

As shown in Fig 27, the containment area has to be at least 30′ wide to allow enough space for the tanks and 3′ access ways. A 30′x48′ area provides the computed area for the 3′ depth, but as seen in Fig 27, the area needs to be at least 30′x59′ for all tanks to fit. For the 2′ depth, a 30′x63′ area is required and also allows the tanks to fit in the area with adequate clearance.

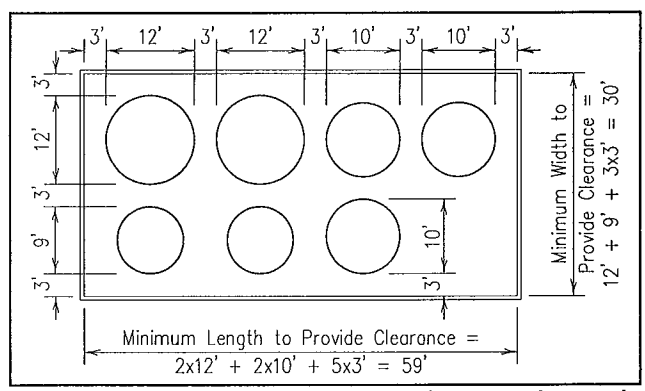

Fig 27. Scaled site plan for the secondary containment in Example 1.

Note that the length may need to be increased to provide the required containment floor area (CFA), depending on wall height. For example, a 2′ high wall requires 1,890 ft^2 (at FF=1.25) of floor area which is a 30′x63′ area.

If a tank is to be placed in the empty corner by the 10′ diameter tanks in the future, its displacement volume would have to be included in the CFA calculation. It would be best to design the containment area for eight 12′ diameter tanks, because it would allow more flexibility in future facility changes. From Table 19, a 33′x63′ (2,079 ft^2 ÷ 33′ = 63′) containment area would be required for a 3′ high wall or a 33′x67′ (2,205 ft^2 ÷ 33′ = 67′) containment area would be required for a 2′ high wall. In this case, the required minimum walk space between tanks accounts for the small difference between the 2′ and the 3′ wall height.

NOTE: It is extremely important to make a scale drawing of the area with the tanks drawn to scale in position to make sure all the tanks and equipment will fit into the containment area with sufficient clearance. The 2′ wall section contains more floor slab area than the 3′ section, but this is offset some by the additional wall area that the deeper section requires. Savings in concrete area should only be a secondary consideration after function and safety for secondary containments.

Example 2:

Elevated horizontal and vertical tanks. Design a containment area for three 12′ dia. × 20′ high vertical tanks that set on the floor and for two 10′ dia. × 20′ long horizontal tanks elevated one foot off the floor. The owner wants a 3′ high wall. An additional 25% of the largest tank is required for freeboard (FF=1.25). The vertical tanks are the largest storage and the volume of one of these tanks from Table 6 is 113.1 ft^3/ft of depth × 20′ = 2,262 ft^3. The BV for each of the other 12′ diameter vertical tanks is:

$$BV_v = 113.1\ ft^3/ft \times 3'$$
$$= 339.3\ ft^3/tank$$

The base volume for one of the horizontal tanks from Table 7 at a fluid level equal to 3′ - 1 ′ = 2′ is:

$$BV_H = 11.18\ ft^3/ft \times 20'$$
$$= 223.6\ ft^3/tank$$

$$TBV = 2 \times 339.3 + 2 \times 223.6$$
$$= 1{,}125.8\ ft^3$$

$$CFA = LTV \times FF + TBV \div CVD$$
$$= (2{,}262 \times 1.25 + 1{,}125.8) \div 3$$
$$= 1{,}317.8\ ft^2$$

From Fig 28, the minimum containment size that allows sufficient clearance between tanks and walls is 31′x49′ inside dimensions. These dimensions yield a 1,519 ft^2 containment floor area, which is greater than CFA, so they are adequate.

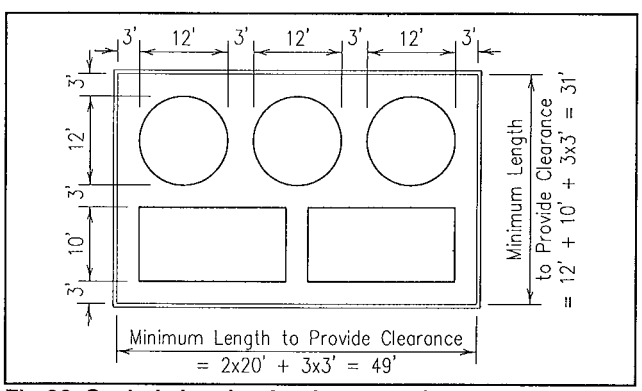

Fig 28. Scaled site plan for the secondary containment in Example 2.

One alternative for minibulk storage is to provide a concrete curbed pad large enough to hold the entire contents of the largest minibulk container. A 6" curbed area allows forklift access by a short ramp. Table 16 gives the area required to hold different size minibulk tanks and drums in a 6" containment depth.

Methods of Secondary Containment

Secondary containment typically consists of a curb, wall or dike constructed around the storage tanks. The wall and floor of a secondary containment must be impervious to liquid for the life of the structure. Secondary containment floors must support gravity loads of full tanks and must resist weather-related cracking and corrosion. The walls must resist static and hydraulic loads from the equilibrium liquid level. Walls adjacent to large tanks also need to resist dynamic hydraulic loads from liquids gushing from a ruptured tank. **NOTE: Do not** put earthen berms against walls unless the walls are designed to withstand the earth loads in the opposite direction from the hydrostatic loads. Also, the earth could corrode exposed steel and may cause the containment to be defined as an underground storage, which has more restrictive regulations. Construct containment pad floors at grade level.

The following sections describe different methods of secondary containment; see the previous sizing section in this chapter for sizing information.

Table 16. Secondary containment area for minibulk storage.
Assuming a 6" curbed area.

Minibulk container size, gal	Containment area per minibulk, ft^2
60	16
110	30
150	41
200	54
250	67
300	81

Curbed Areas

Secondary containment of small volumes of pesticide or fertilizer can be accomplished by constructing a small curb around the storage area. This is an excellent method for containing bottles, jugs and small minibulk tanks. The curb must completely surround the storage area and must be high enough to have sufficient volume to contain any potential spillage plus any required freeboard. See Chapter 9, Concrete.

Double Tanks

Placing a tank within a tank, Fig 29, may be an economical method of providing secondary containment for relatively small, individual tanks. The secondary containment tank must be sufficiently wider than the primary tank to store the volume of fluid in the primary tank above the top of the outer tank plus any required freeboard. Provide a means of manually pumping precipitation buildup from the secondary tank to a rinsate tank. Make sure the water is not contaminated before pumping. The primary tank does not usually need to be anchored because fluid would remain in it during a spill, unless it is a relatively tall, slender tank where wind loads may be a problem for empty tanks.

Concrete Wall and Floor Containment

Concrete is the preferred material for secondary containment walls and floors. Design walls and floors to support the hydrostatic and gravity loads and to minimize cracking. See Chapter 9, Concrete.

Table 17. Secondary containment floor area (CFA) for vertical tanks—FF=1.0.

Tank diameter, ft	Tank height, ft	Tank area, ft²	Cont. depth, ft	Number of tanks 1	2	3	4	5	6	7	8
				CFA, ft²							
15	20	177	1	3,534	3,711	3,888	4,064	4,241	4,418	4,595	4,771
15	20		2	1,767	1,944	2,121	2,297	2,474	2,651	2,925	3,004
15	20		3	1,178	1,355	1,532	1,708	2,223*	2,223*	2,925*	2,925*
14	20	154	1	3,079	3,233	3,387	3,541	3,695	3,848	4,002	4,156
14	20		2	1,539	1,693	1,847	2,001	2,155	2,309	2,627*	2,627*
14	20		3	1,026	1,180	1,334	1,488	1,998*	1,998	2,627*	2,627*
13	20	133	1	2,655	2,787	2,920	3,053	3,186	3,318	3,451	3,584
13	20		2	1,327	1,460	1,593	1,726	1,858	1,991	2,345*	2,345*
13	20		3	885	1,018	1,150	1,283	1,785*	1,785*	2,345*	2,345*
12	20	113	1	2,262	2,375	2,488	2,601	2,714	2,827	2,941	3,054
12	20		2	1,131	1,244	1,357	1,470	1,584*	1,696	2,079*	2,079*
12	20		3	754	867	980	1,093	1,584*	1,584*	2,079*	2,079*
11	20	95	1	1,901	1,996	2,091	2,186	2,281	2,376	2,471	2,566
11	20		2	950	1,045	1,140	1,235	1,395*	1,425	1,829*	1,829*
11	20		3	634	729	824	961*	1,395*	1,395*	1,829*	1,829*
10	20	79	1	1,571	1,649	1,728	1,806	1,885	1,963	2,042	2,121
10	20		2	785	864	942	1,021	1,218*	1,218*	1,595*	1,595*
10	20		3	524	602	681	841*	1,218*	1,218*	1,595*	1,595*
9	20	64	1	1,272	1,336	1,400	1,463	1,527	1,590	1,654	1,718
9	20		2	636	700	763	827	1,053*	1,053*	1,377*	1,377*
9	20		3	424	488	585*	729*	1,053*	1,053*	1,377*	1,377*
8	18	50	1	905	955	1,005	1,056	1,106	1,156	1,206	1,257
8	18		2	452	503	553	625*	900*	900*	1,175*	1,175*
8	18		3	302	352	504*	625*	900*	900*	1,175*	1,175*
7	16	39	1	616	654	693	731	770	808	989*	989*
7	16		2	308	346	429*	529*	759*	759*	989*	989*
7	16		3	205	299*	429*	529*	759*	759*	989*	989*
6	14	28	1	396	424	452	481	630*	630*	819*	819*
6	14		2	198	252*	360*	441*	630*	630*	819*	819*
6	14		3	144*	252*	360*	441*	630*	630*	819*	819*
5	12	20	1	236	255	297*	361*	513*	513*	665*	665*
5	12		2	121*	209*	297*	361*	513*	513*	665*	665*
5	12		3	121*	209*	297*	361*	513*	513*	665*	665*

*Containment floor area dictated by tank and wall clearance requirements. Fig 26.

Table 18. Secondary containment floor area (CFA) for vertical tanks—FF=1.10.

This table is for containments (Cont.) with all tank diameters the same and no space provided for additional equipment. Additional volume may be needed for precipitation.

Tank diameter, ft	Tank height, ft	Tank area, ft²	Cont. depth, ft	Number of tanks 1	2	3	4	5	6	7	8
				CFA, ft²							
15	20	177	1	3,888	4,064	4,241	4,418	4,595	4,771	4,948	5,125
15	20		2	1,944	2,121	2,297	2,474	2,651	2,827	3,004	3,181
15	20		3	1,296	1,473	1,649	1,826	2,223*	2,223*	2,925*	2,925*
14	20	154	1	3,387	3,541	3,695	3,848	4,002	4,156	4,310	4,464
14	20		2	1,693	1,847	2,001	2,155	2,309	2,463	2,627*	2,771
14	20		3	1,129	1,283	1,437	1,591	1,998*	1,998*	2,627*	2,627*
13	20	133	1	2,920	3,053	3,186	3,318	3,451	3,584	3,717	3,849
13	20		2	1,460	1,593	1,726	1,858	1,991	2,124	2,345*	2,389
13	20		3	973	1,106	1,239	1,372	1,785*	1,785*	2,345*	2,345*
12	20	113	1	2,488	2,601	2,714	2,827	2,941	3,054	3,167	3,280
12	20		2	1,244	1,357	1,470	1,583	1,696	1,810	2,079*	2,079*
12	20		3	829	942	1,056	1,169	1,584*	1,584*	2,079*	2,079*
11	20	95	1	2,091	2,186	2,281	2,376	2,471	2,566	2,661	2,756
11	20		2	1,045	1,140	1,235	1,330	1,425	1,521	1,829*	1,829*
11	20		3	697	792	887	982	1,395*	1,395*	1,829*	1,829*
10	20	79	1	1,728	1,806	1,885	1,963	2,042	2,121	2,199	2,278
10	20		2	864	942	1,021	1,100	1,218*	1,257	1,595*	1,595*
10	20		3	576	654	733	841*	1,218*	1,218*	1,595*	1,595*
9	20	64	1	1,400	1,463	1,527	1,590	1,654	1,718	1,781	1,845
9	20		2	700	763	827	891	1,053*	1,053*	1,377*	1,377*
9	20		3	467	530	594	729*	1,053*	1,053*	1,377*	1,377*
8	18	50	1	995	1,046	1,096	1,146	1,196	1,247	1,297	1,347
8	18		2	498	548	598	648	900*	900*	1,175*	1,175*
8	18		3	332	382	504*	625*	900*	900*	1,175*	1,175*
7	16	38	1	677	716	754	793	831	870	989*	989*
7	16		2	339	377	429*	529*	759*	759*	989*	989*
7	16		3	226	299*	429*	529*	759*	759*	989*	989*
6	14	28	1	435	464	492	520	630*	630*	819*	819*
6	14		2	218	252*	360*	441*	630*	630*	819*	819*
6	14		3	145	252*	360*	441*	630*	630*	819*	819*
5	12	20	1	259	279	298	361*	513*	513*	665*	665*
5	12		2	130	209*	297*	361*	513*	513*	665*	665*
5	12		3	121*	209*	297*	361*	513*	513*	665*	665*

*Containment floor area dictated by tank and wall clearance requirements. Fig 26.

Table 19. Secondary containment floor area (CFA) for vertical tanks—FF=1.25.

This table is for containments (Cont.) with all tank diameters the same and no space provided for additional equipment. Additional volume may be needed for precipitation.

Tank diameter, ft	Tank height, ft	Tank area, ft²	Cont. depth, ft	Number of tanks 1	2	3	4	5	6	7	8
				CFA, ft²							
15	20	177	1	4,418	4,595	4,771	4,948	5,125	5,301	5,478	5,655
15	20		2	2,209	2,386	2,562	2,739	2,916	3,093	3,269	3,446
15	20		3	1,473	1,649	1,826	2,003	2,223*	2,356	2,925*	2,925*
14	20	154	1	3,848	4,002	4,156	4,310	4,464	4,618	4,772	4,926
14	20		2	1,924	2,078	2,232	2,386	2,540	2,694	2,848	3,002
14	20		3	1,283	1,437	1,591	1,745	1,998*	2,053	2,627*	2,627*
13	20	133	1	3,318	3,451	3,584	3,717	3,849	3,982	4,115	4,247
13	20		2	1,659	1,792	1,925	2,057	2,190	2,323	2,456	2,588
13	20		3	1,106	1,239	1,372	1,504	1,785*	1,785*	2,345*	2,345*
12	20	113	1	2,827	2,941	3,054	3,167	3,280	3,393	3,506	3,619
12	20		2	1,414	1,527	1,640	1,753	1,866	1,979	2,092	2,205
12	20		3	942	1,056	1,169	1,282	1,584*	1,584*	2,079*	2,079*
11	20	95	1	2,376	2,471	2,566	2,661	2,756	2,851	2,946	3,041
11	20		2	1,188	1,283	1,378	1,473	1,568	1,663	1,829*	1,853
11	20		3	792	887	982	1,077	1,395*	1,395*	1,829*	1,829*
10	20	79	1	1,963	2,042	2,121	2,199	2,278	2,356	2,435	2,513
10	20		2	982	1,060	1,139	1,217	1,296	1,374	1,595*	1,595*
10	20		3	654	733	812	890	1,218*	1,218*	1,595*	1,595*
9	20	64	1	1,590	1,654	1,718	1,781	1,845	1,909	1,972	2,036
9	20		2	795	859	922	986	1,053*	1,113	1,377*	1,377*
9	20		3	530	594	657	729*	1,053*	1,053*	1,377*	1,377*
8	18	50	1	1,131	1,181	1,232	1,282	1,332	1,382	1,433	1,483
8	18		2	565	616	666	716	900*	900*	1,175*	1,175*
8	18		3	377	427	504*	625*	900*	900*	1,175*	1,175*
7	16	38	1	770	808	847	885	924	962	1,001	1,039
7	16		2	385	423	462	529	759*	759*	989*	989*
7	16		3	257	299	429*	529*	759*	759*	989*	989*
6	14	28	1	495	523	551	580	630*	636	819*	819*
6	14		2	247	276	360*	441*	630*	630*	819*	819*
6	14		3	165	252*	360*	441*	630*	630*	819*	819*
5	12	20	1	295	314	334	361*	513*	513*	665*	665*
5	12		2	147	209*	297*	361*	513*	513*	665*	665*
5	12		3	121*	209*	297*	361*	513*	513*	665*	665*

*Containment floor area dictated by tank and wall clearance requirements. Fig 26.

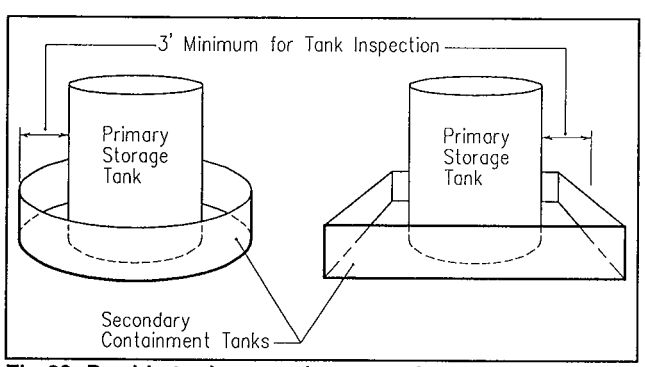

Fig 29. Double tank secondary containment.

Steel Floors and Walls

Steel can be used to construct the floor and walls of a secondary containment, but is usually not recommended unless well sealed by epoxy, polyurea or other suitable bonding sealant. Otherwise steel corrodes when exposed to pesticides and fertilizers. Corrosion of mild steel is especially a problem where steel contacts moist soil and under tank bottoms where corrosion can be high, yet impossible to inspect to ensure that it will hold the fluids when a spill occurs. Storage tanks should be elevated on spacers (like pressure preservative treated lumber). When steel walls and floors are used, they should be designed by an engineer to resist the hydrostatic and tank loads to be encountered. Coat the inside and outside of mild steel tanks with a heavy duty, chemical resistant epoxy, polyurea or other sealant. Stainless steel works well, but is expensive.

Fiberglass or Plastic Walls and Floors

Rectangular or square, shallow (18"-36" high) fiberglass open containment tanks are available that can contain one to four small storage tanks. These work well for containing fiberglass or polyethylene tanks up to 15′ in diameter with 20′-25′ heights. A smooth base of concrete or compacted soil with a level sand overlay is required to support fiberglass containments. Fiberglass or plastic containments used within a building are susceptible to melting in the event of a fire. This would leave the storages without secondary containment at a time when one would be needed.

Asphalt Floors—Fertilizer Only

Asphalt tends to "flow" under permanent large loads and should not be used under storage tanks. Asphalt pavement around concrete tank pads for fertilizers may be acceptable in some states, but maintaining the asphalt to be impermeable may be difficult because it is generally not reinforced and has

a porous surface that readily absorbs fertilizers. Seal asphalt with a compatible coating to ensure against leakage through cracks or porous surfaces. Contact an engineer who has experience with designing asphalt for fertilizer storage areas to obtain a design.

Synthetic Liners with Concrete or Composition Walls—Fertilizer Only

Synthetic liners (e.g. synthetic rubber, EPDM, polyurea, Hypalon) can be used to repair concrete containments with cracks or in new construction with an earthen floor and a concrete or other type of wall for vertical support, Fig 30. The synthetic liner on the floor is sometimes protected by a layer of sand or smooth gravel, which becomes contaminated by a spill. This construction is suited only to containment of fertilizer storages. Once the protective granular cover is contaminated, any precipitation in the containment area is also contaminated. It may be possible to decontaminate large (1"-1.5" diameter) smooth gravel by flushing with a large amount of water. The flush water would have to be treated as contaminated. Otherwise, the granular fill would have to be replaced and the contaminated material disposed properly. It is difficult to remove the gravel without damaging the synthetic liner.

Install synthetic liners as recommended by the manufacturer to prevent punctures and tears. Choose a liner that is chemically resistant to all the fertilizers stored in the containment area.

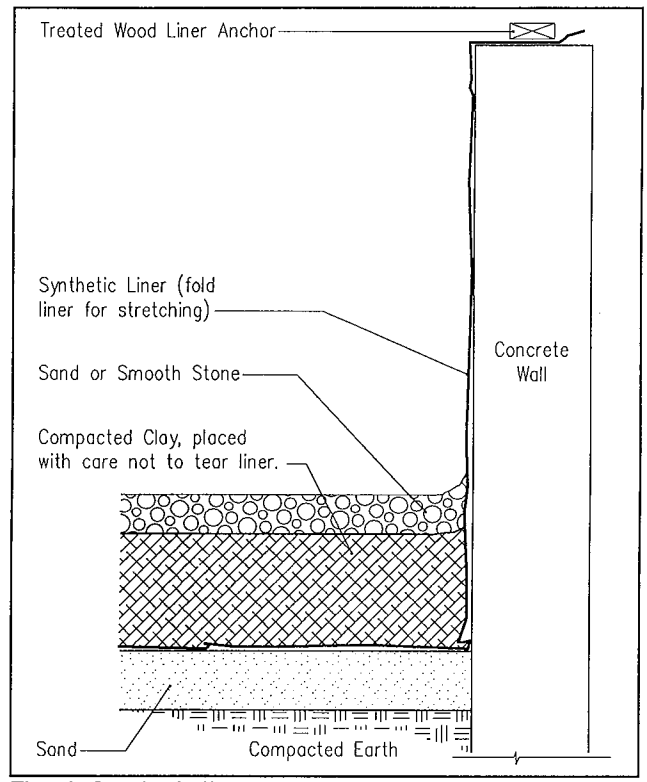

Fig 30. Synthetic liner with concrete wall.
Place and protect liner according to manufacturer's specification. See Chapter 9, Concrete, for design of concrete support wall.

Earthen Dikes—Fertilizer Only

Earthen dikes **must not be used for pesticide containment facilities** and are not generally recommended for fertilizer containment. Earthen dikes are used for secondary containment around large (250,000 gal) fertilizer tanks because other types of secondary containment, such as concrete, are economically impractical for very large volumes. Earthen dikes are relatively low and therefore may need to occupy a large area to provide a large containment volume. This system requires considerably more land area than containments with vertical walls because of the berm slopes and top widths. Earthen dike containment is usually formed by excavating earthen berms so they may be partly above and below grade. The containment dike may be located downslope from the storage on sloping sites that would facilitate the fitting of the containment structure within various topographies. On relatively level sites, synthetic liners can be laid over a graded, ground-level site with earthen berms to form the required containment volume.

Earthen dike design

Do not locate new storage facilities in areas underlain by porous (sandy) soils or high water tables or in areas subject to sink holes and subsurface mines. Remove any drainage tiles within or underlying the diked area. State or local regulations may dictate distance between water table and containment floor.

Make the top of a dike at least 3′ wide; 8′ is recommended if a tractor and mower will be driven on the top, Fig 31. Follow accepted construction methods for building dikes. Check with your SCS office to determine dike wall sideslopes based on local soil

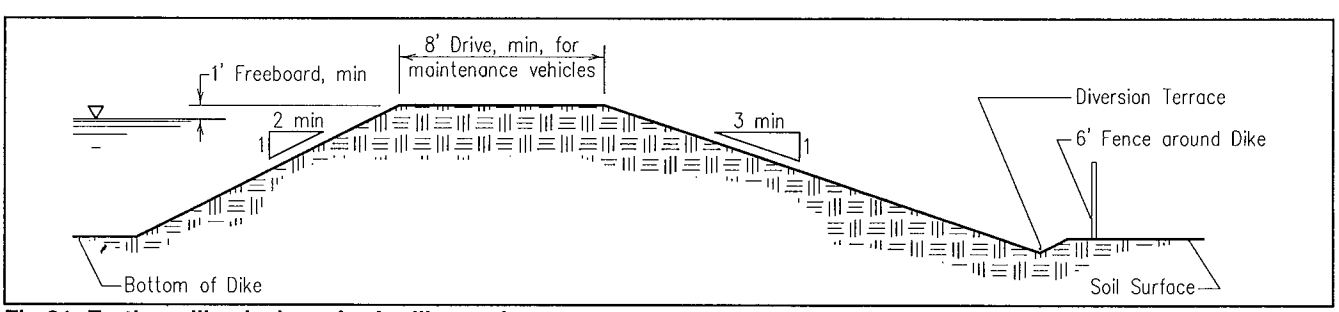

Fig 31. Earthen dike design—for fertilizer only.

characteristics. In general, steeper inside banks conserve space and reduce rainfall runoff entering the containment. Inside bank slopes of 1:2 to 1:3 (rise:run) are common for most soils. Make the outside sideslopes no steeper than 1:3 for easier maintenance.

For stability, an earthen dike must rest on a base of firm soil or rock; remove vegetation and top soil from the area where the dike is to be placed. Compact the dike and protect it from erosion. If the slope is 1:2 or less, grass is sufficient protection on the exterior wall of the dike. Effective erosion control on earthen embankments requires both seeding and riprap or an equivalent alternative. Seed dikes from the outside toe up the embankment face and across the embankment top. The most satisfactory seeding of embankments is with hardy, short, spreading perennial grasses that are kept mowed. Do not use alfalfa or other long rooted crops because the roots impair the water holding efficiency of the dike. Specific seeding mixture recommendations for local conditions can be obtained from an agricultural extension agent or SCS soil scientist. For the interior slope (the earthen wall within the containment structure), cover the dike with riprap, flat road stone or a similar crushed stone material, unless a synthetic liner is used. Cover the earthen floor of the containment area with a layer of gravel or crushed stone at least 2" thick. This layer protects the dike and floor from erosion in the event of a massive tank failure.

Diked areas do not have outlets. Slope the containment floor to a collecting spot where precipitation can be pumped to a storage tank for proper disposal.

Install a 6′ high chain-link fence around the outside of the diked area to keep people and animals out. Post warning signs on each side identifying the storage contents.

Walking on the stone covering of the interior slope of the dike will result in maintenance problems as the stone moves down the dike. Build walkways and stairs with handrails on slopes to give workers safe access into the containment area without displacing stone covering, Fig 32.

Earthen dikes present other maintenance problems. Burrowing animals can destroy the integrity of an earthen dike. Dirt, weeds and trash also accumulate in the gravel and result in continuous housekeeping and maintenance problems. In the event of a spill, all of the gravel on the interior of the dike will be contaminated. Once contaminated it is difficult to decontaminate a facility. Subsequent precipitation becomes contaminated and must be disposed according to state and local regulations.

Earthen dike sizing

Determine the dike depth after considering the site, volume needed and groundwater conditions. Deep dikes require less floor area and dike length for the same capacity, but can be more dangerous and inconvenient. Large earthen containments should have additional freeboard beyond that needed to allow for precipitation because wind can create larger waves that could splash over the dikes. A safety factor can be added to the required liquid volume by utilizing a freeboard factor (FF) based on the leaked liquid volume. The safety factor may range from 10%-25%, producing a FF of 1.1 for 110% of the leaked liquid volume or 1.25 for 125% of the leaked liquid volume. Also, additional water is channeled into the containment from precipitation that falls on the inside dike slopes. This additional freeboard is called wave freeboard and should be at least 1′, with 2′ preferred. The volume of rectangular and square earthen dike containments can be determined from the following equations (terms are defined in Fig 33):

$$LW = EW - 2 \times FB \times SS$$
$$LL = EL - 2 \times FB \times SS$$
$$LD = ED - FB$$
$$ALV = (LW \times LL \times LD) - (SS \times LD^2) \times (LW + LL) + (4 \times SS^2 \times LD^3 \div 3)$$
$$RLV = LLV \times FF + TBV + TFD$$

Where:

LW = Liquid surface width, ft
EW = Earthen basin width, ft
FB = Wave freeboard, ft
SS = Sideslope, ft; amount of run for 1′ rise
LL = Liquid surface length, ft
EL = Earthen basin length, ft
LD = Liquid depth, ft
ED = Earthen basin depth, ft
ALV = Actual liquid volume, ft^3
LLV = Leaked liquid volume, ft^3
FF = Freeboard factor, 1.1 for 110% of LLV, 1.25 for 125% of LLV

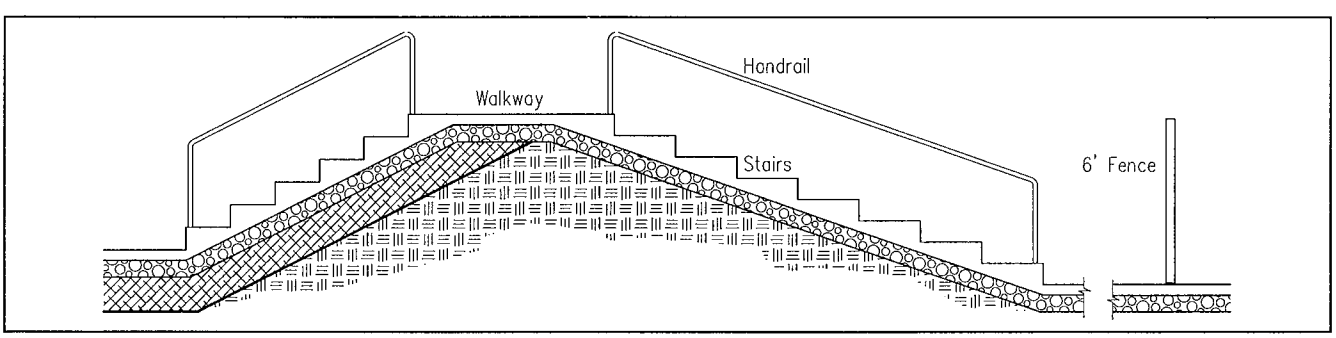

Fig 32. Walkways and stairs to protect workers and earthen dikes.

RLV = Required liquid volume, ft^3
TBV = Sum of tank base volumes for the non-leaking tanks in containment area that displaces liquid volume, ft^3
TFD = Sum of tank foundation volumes that displaces liquid volume, ft^3. Some large tanks are placed on a raised base to avoid floatation problems and this base displaces liquid.

Example 3:

Four 100′ dia. × 50′ high vertical cylindrical fertilizer storage tanks are placed in an earthen dike secondary containment facility. The interior side slope of 1:2 and a freeboard of 2′ is specified. Size the diked area with tank volume (V) from Fig 17:

$$V = 0.7854 \times D^2 \times h$$
$$= 0.7854 \times 100^2 \times 50$$
$$= 392{,}700 \text{ ft}^3$$

Design the basin required liquid volume (RLV) for the volume of one tank (LLV) plus the volume of liquid displaced by the other 3 tanks (TBV). Assume the maximum liquid depth (LD) will be 10′ deep. The displacement volume of the other three storage tanks is:

$$TBV = 3 \times 0.7854 \times 100^2 \times 10$$
$$= 235{,}620 \text{ ft}^3$$

The required net containment volume is:

$$RLV = LLV + TBV$$
$$= 392{,}700 + 235{,}620$$
$$= 628{,}320 \text{ ft}^3$$

Assume a liquid surface width (LW) and length (LL) and use the equation for ALV to determine if those dimensions will yield an actual liquid volume that is greater or equal to the required liquid volume (RLV). A 250′ wide by 300′ long liquid surface area would yield an actual liquid volume of:

$$ALV = (250' \times 300' \times 10') - (2 \times 10^2) \times (250 + 300) + (4 \times 2^2 \times 10^3 \div 3)$$
$$= 645{,}333 \text{ ft}^3$$

With these dimensions ALV is greater than RLV and it would work. The earthen basin width (EW) and length (EL) would be:

$$EW = LW + 2 \times FB \times SS$$
$$= 250' + 2 \times 2' \times 2$$
$$= 258'$$

$$EL = LL + 2 \times FB \times SS$$
$$= 300' + 2 \times 2' \times 2$$
$$= 308'$$

Liners for earthen containments

Seal the surface soil of the containment area, including the dike, with a sealing agent such as sodium bentonite, attapulgite or a synthetic liner. Earthen containment liners prevent downward or lateral movement of fertilizer from the containment area into the environment, surface water or groundwater.

An effective liner must be chemically compatible with its environment, including any spilled fertilizer. It must also retain its integrity over time and be protected from and be resistant to holes, tears or other breaks in its continuity; this means that the liner must remain somewhat flexible. In all cases, liner specifications and performance must conform to local and state regulations.

Clay liners are often used to restrict the downward percolation through the floor and lateral movement through the berm of liquids from liquid fertilizer, Fig 34. **WARNING: Clay liners are not suitable for pesticide containment.** Native soil materials and bentonite clay mixtures are the most commonly used liners, but attapulgite clay may be a more effective barrier for liquids with a high electrolyte (salt concentration such as liquid fertilizers). Attapulgite clay seals better under wet conditions but native clay does not crack as much under dry conditions. Sealing is usually accomplished by uniformly incorporating the clay additive into the top 4" of soil. The soil is then compacted with rolling equipment to a high bulk density so the degree of compaction is at least 90% of Standard Proctor Density. Use the clay application rate approved by the respective state department of natural resources, agriculture or environmental protection. If no state standards or recommendations are available, use reliable civil engineering recommendations to design a liner that results in a downward water movement of not greater than 1.0×10^{-4} to 1.0×10^{-6} cm/sec at construction. Check local

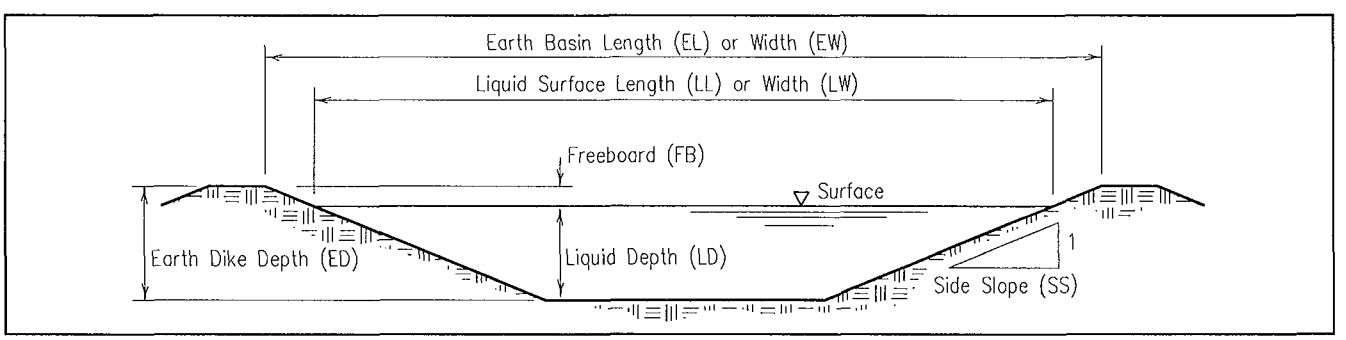

Fig 33. Earthen dike term definitions.

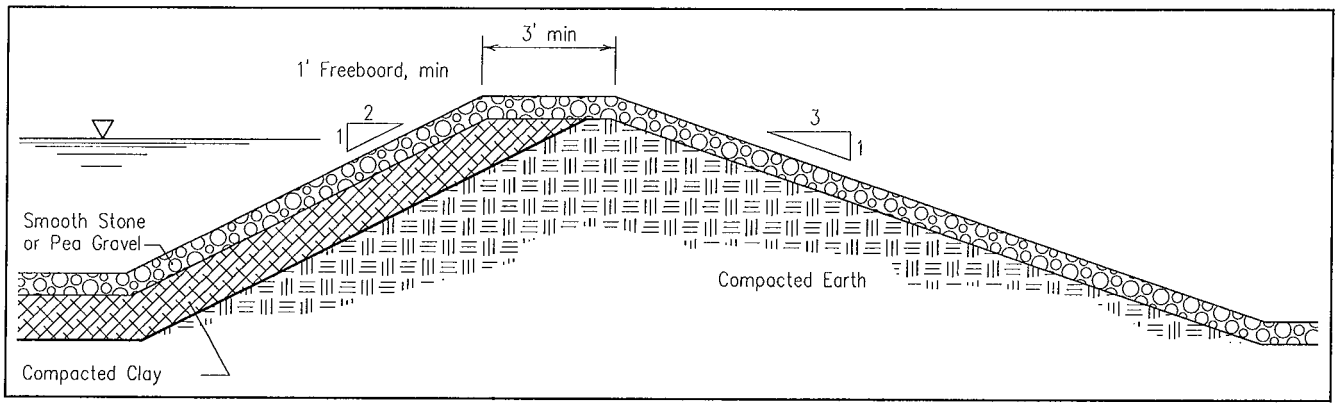

Fig 34. Clay liner for earthen dike secondary containment—for fertilizer only.

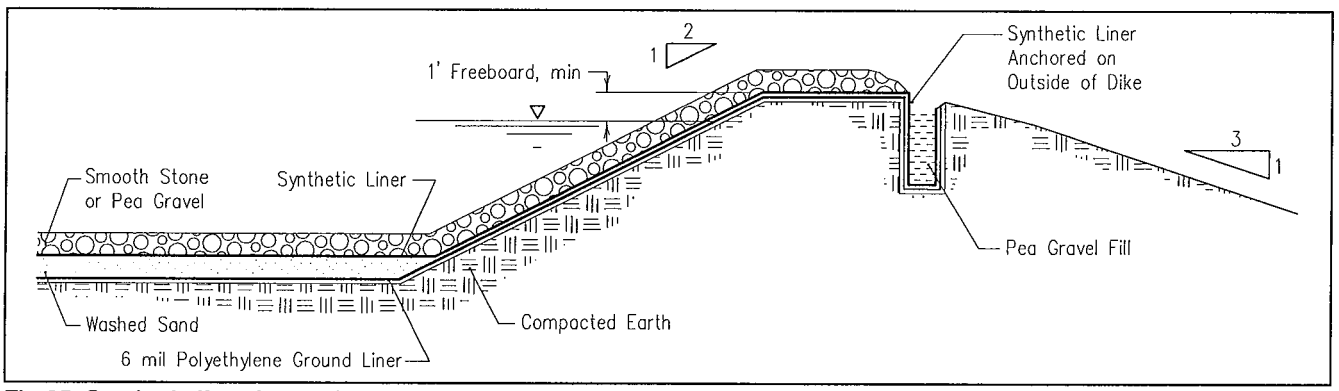

Fig 35. Synthetic liner for earthen dike secondary containment—for fertilizer only.

regulations for the required saturated hydraulic conductivity.

To obtain an adequate base for the clay liner, remove the topsoil and compact subsoil. Porous materials, such as sand or gravel, must be removed. Do not incorporate vegetation and debris removed from the containment area into the embankment construction.

Synthetic Liners

Several synthetic liners (such as synthetic rubber, EPDM and Hypalon) are available as alternatives to clay liners, Fig 35. Flexible liners have factory or field bonded seams to form a single continuous barrier that underlies an entire secondary containment facility. To be effective, they must be extremely durable and chemically resistant to the stored fertilizers and the soils. Properly designed and installed liners, if protected from puncturing, are superior to clay liners as a barrier to liquid flow.

8. MIXING/LOADING FACILITIES AND EQUIPMENT[8]

Surface water, groundwater and soil can be contaminated in areas where pesticides and fertilizers are stored, mixed and loaded into applicator tanks, or unloaded from sprayers and transferred into rinsate holding tanks. If not contained, accidental spills or overflows, unused mixtures and flush water for applicator tanks, plumbing and booms, create a pesticide and fertilizer build-up in surrounding soil that can cause serious contamination. The pesticides and fertilizers used and the mixture characteristics determine if water used to rinse sprayer tanks and plumbing is a hazardous waste. Operators are liable for expensive cleanup, even long after selling the property, if mishandling of pesticides and fertilizers results in environmental contamination.

Facility Planning and Layout

To protect surface environments and groundwater, install permanent concrete pads (or equivalent) at mixing/loading facilities. Plan for present and future storage, security and mixing/loading functions when planning, renovating or retrofitting liquid fertilizer and/or pesticide handling and storage facilities. Personnel and environmental safety, as well as state and federal regulations must be taken into account as facilities are designed.

Precipitation is a major concern when using open concrete mixing/loading pads. Transfer of precipitation may create a future legal problem. Roofed mixing/loading facilities are recommended in all areas of the U.S. to minimize disposal of potentially large volumes of contaminated precipitation which might be considered hazardous waste. Complete buildings with hangar- or garage-type drive-through doors provide the maximum protection against having to handle large volumes of precipitation that might contain dilute solutions of pesticides.

Local weather factors in each geographic location affect structural as well as functional designs. Non-roofed facilities in dry southwestern climates like Arizona may need a containment holding volume of 125% of the largest pesticide or liquid fertilizer tank.

Concrete facilities in warm, high-precipitation areas, like the southeastern and south central U.S., may only require open-sided roofed structures with large roof overhangs over concrete pads to keep precipitation out of containment and loading pads. Operators in central and northern U.S. should install open-front or fully enclosed containment facilities to minimize precipitation handling and provide indoor storage of spray equipment in the off-season. Open-sided roof overhangs should be at least a 30° angle from vertical from the edge of the mixing/loading pad(s) in all directions, Fig 36, to minimize precipitation blow-in. Saving one or two large pesticide hazardous waste disposal bills can pay for a major part of roof construction or even the cost of a complete building.

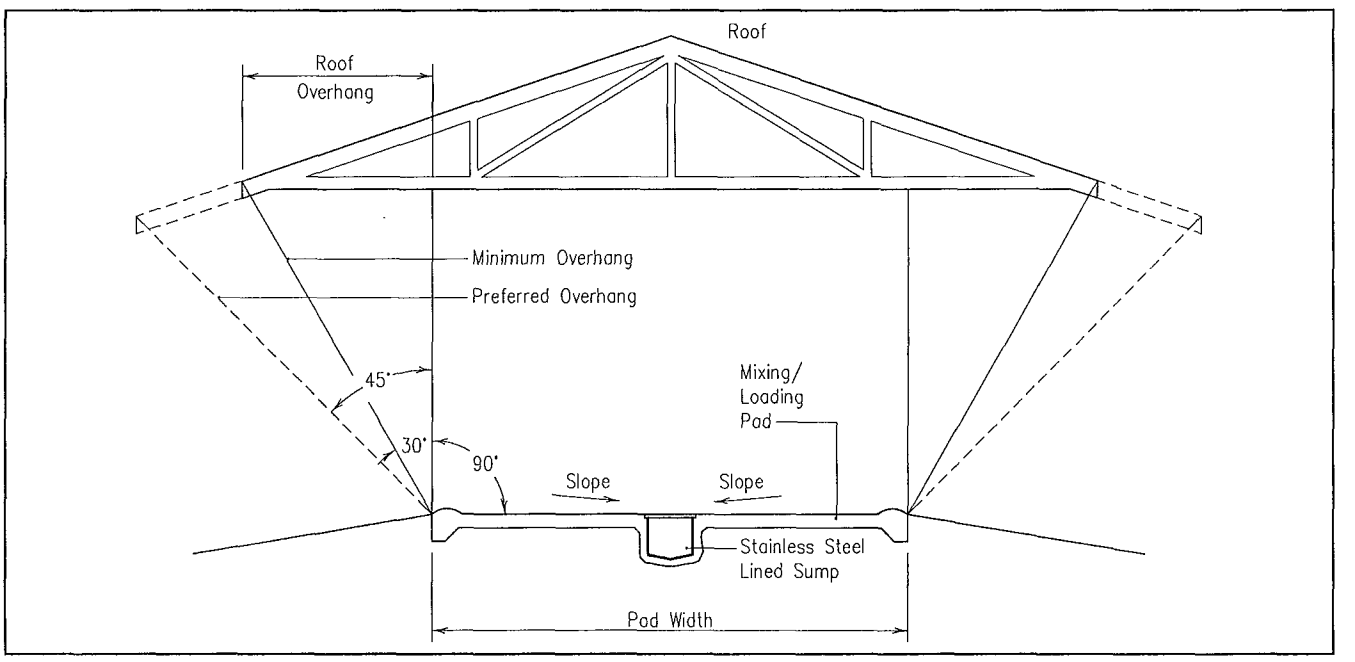

Fig 36. Open-sided roof structure over mixing/loading pad.

8 Ronald T. Noyes, Agricultural Engineering Department, Oklahoma State University, Stillwater.

Mixing/Loading Pad Layout

The layout of mixing/loading pads can improve operational and worker efficiency while reducing personnel and environmental safety risks. Incorporate the following features into a mixing/loading pad:

- Sealed, liquid-tight, reinforced concrete pad to form an impervious barrier between the pesticide or liquid fertilizer handling area and the surrounding earth. Slope mixing/loading pads to drain liquids to shallow pump recovery sumps.
- Sloped pad surfaces plus watertight walls and curbs around the perimeter form shallow depressions to temporarily contain pesticides and fertilizers, rinsate, washwater and precipitation that leak or fall on the pad.
- Independent shallow sumps in each functional containment area for collecting liquids for pumping. Thus, different types of pesticide or liquid fertilizer leaks can be handled without cross-contamination. If properly filtered and managed, liquids recovered from each sump may be reused in subsequent, appropriate field applications. Liquid level alarms may be installed to alert operator when liquid enters a sump.
- Concrete pads designed and constructed to facilitate the addition of open sided roofs or complete buildings over part or all of the concrete pad. Design the outer three sides of the pad to have 4"-6" of level concrete surface before floor slopes start for ease in installing wall sills or for good door seals.
- Roof structures and pad sites, surface dikes and drainage to keep storm water from entering the pad and groundwater from collecting under concrete pads.
- Approach ramps to minimize dust and trash accumulation on pad (especially important for aircraft taxiing).

Functional Organization

Mixing, loading and secondary containment pad sizes and shapes depend on the functions performed, and the orientation and boom width of the equipment. Design pads to extend at least 5′ beyond the edges of sprayer equipment's extended boom on each side to catch any splashed water or boom sprays. Consider space needed for workers to get around and between pieces of equipment easily. Fig 37 illustrates a 45′x70′ aerial applicator concrete mixing/loading pad with security fence. This facility has aircraft tie downs and asphalt approach and departure ramps to minimize dust blowing during taxi operations. Mixing/loading equipment plus pesticide and rinsate storage tanks are secured by a chain-link fence and automatically activated security lights at night.

Fig 37 also shows a mixing/loading pad system with a secondary pesticide containment area. Pesticide storage is located on one side of the mixing/loading equipment station, positioned near the secondary containment sump. Rinsate holding and minibulk tanks are located on the other side of the containment sump.

The loading pad area is designed so aircraft or ground sprayers can enter from either side or enter the pad from the front. The loading pad floor has a variable slope that increases uniformly from a level surface along the outer edges to a maximum slope at the sump against the containment divider wall. The centerline valley has a constant slope toward the sump.

Level outer edges along the sides and front of the loading pad are designed for attaching building wall sills or to seal against large overhead or sliding doors. Slope approach ramps or drives away from the pad to ensure that surrounding watershed storm drainage stays outside the mixing/loading pad. Roofed loading pads are highly recommended.

Single Sump Concrete Mixing/Loading Pad Facility

For smaller or less complex pesticide or liquid fertilizer facilities, a simple concrete pad that drains to a single sump in the center of the pad, Figs 38 and 39, may meet the containment needs. Such pads can incorporate a small pesticide storage building on, or adjacent to them. These buildings, when connected as an extension to the pad with its own containment, provide needed storage without increasing the pad size, Fig 39.

A small (10′x12′) pesticide storage building can be located on one corner of a 30′x40′ or larger pad, Fig 38, or placed in optional positions adjacent to the loading pad, Fig 39. A fenced area for mixing/loading equipment and rinsate tanks can be located close to the storage building. Rectangular pads can be arranged with the storage building and mixing/loading area plus pesticide and rinsate storage tanks in a fenced off section across one end of the elongated pad. This provides similar function with less forming expense as the two-sump pad shown in Fig 37.

Sumps and Drainage

Some state regulations do not allow underground storage of pesticides or rinsates. Shallow sumps are not considered underground storages as they are designed with small holding volumes (usually about 15-50 gal) to be used for immediate liquid recovery and transfer, not storage. Some states require sumps to be stainless steel lined. California requires double walled stainless steel sumps with inspection ports, that are to be checked daily for leaks when the facility is handling pesticides.

Some states require that all sumps be drained with an operator controlled pump to guard against contaminated water inadvertently entering groundwater or surface water channels. Other states do not allow discharge of liquids at any time from containment pads. All liquids have to be recovered and con-

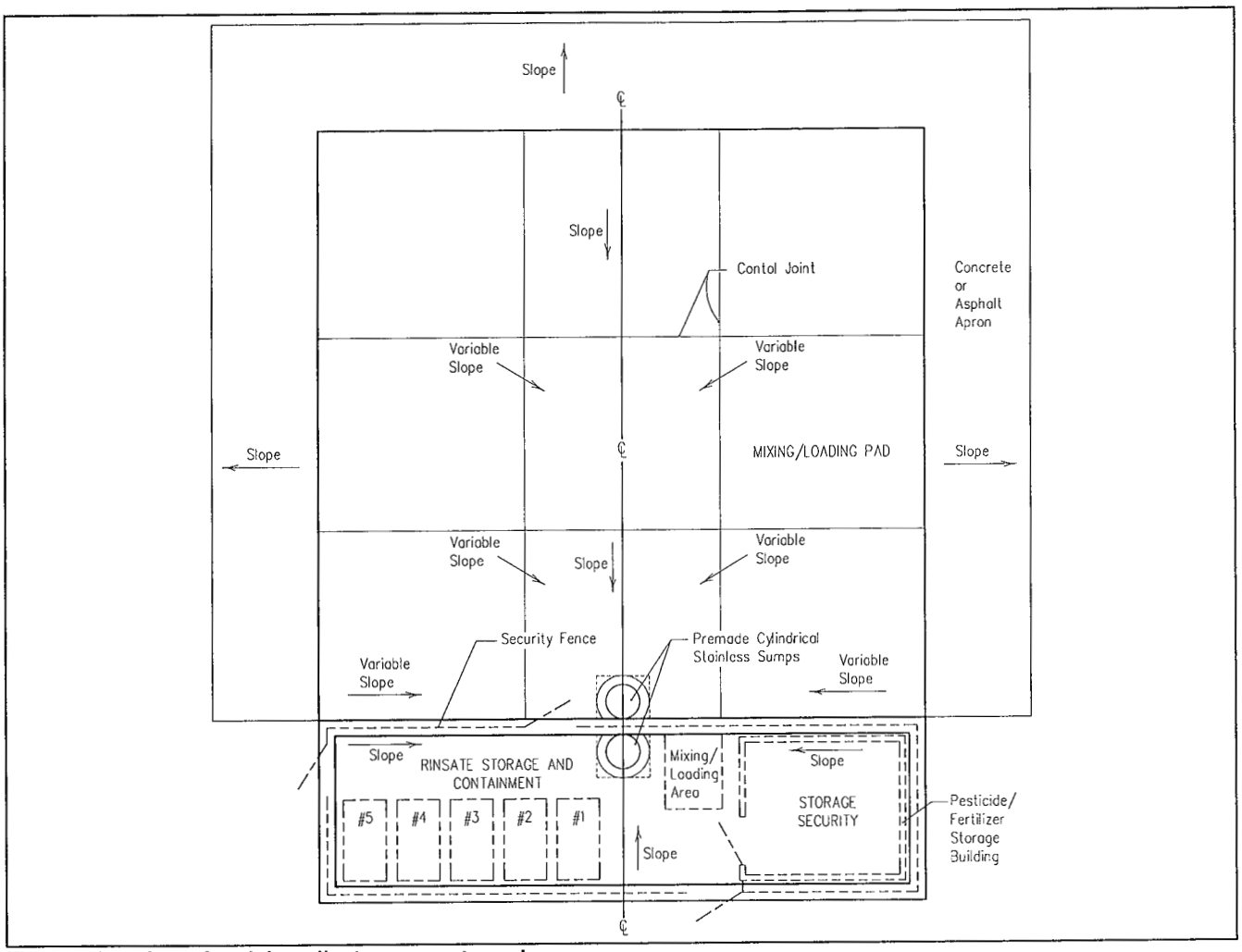

Fig 37. Plan view of aerial applicator concrete pad.

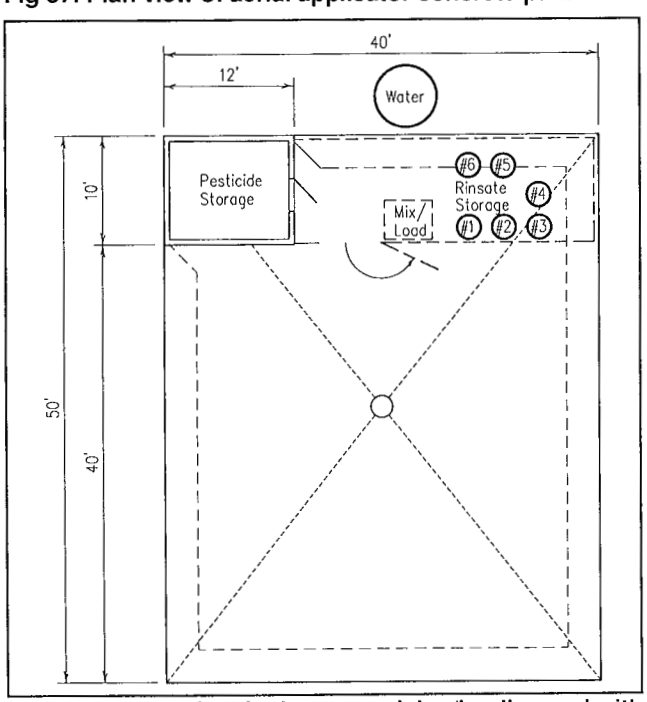

Fig 38. Rectangular single sump mixing/loading pad with storage building and fenced pesticide security area.

tained in holding tanks or be allowed to evaporate. Roofed or completely enclosed concrete pads greatly minimize non-process liquid handling at facilities.

The secondary containment sump recovers leaks and spills and is used to pump out accumulated liquids such as rainwater. Cover the sump with a structural grate for safety; a dust cover over the grate minimizes dust and debris blowing in. Choose load pad sump grates that can support vehicle wheel loading.

Keep sumps covered and cleaned out, especially during spraying seasons. Soil and debris in sumps create a serious disposal problem of potentially hazardous waste. This problem reinforces the value of enclosing the mixing/loading pad area to avoid solid hazardous waste problems resulting from blowing soil and debris. According to EPA regulation, transporting pesticide contaminated soil for disposal requires a licensed hauler of hazardous materials, regardless of whether the pesticide applicator is private or commercial.

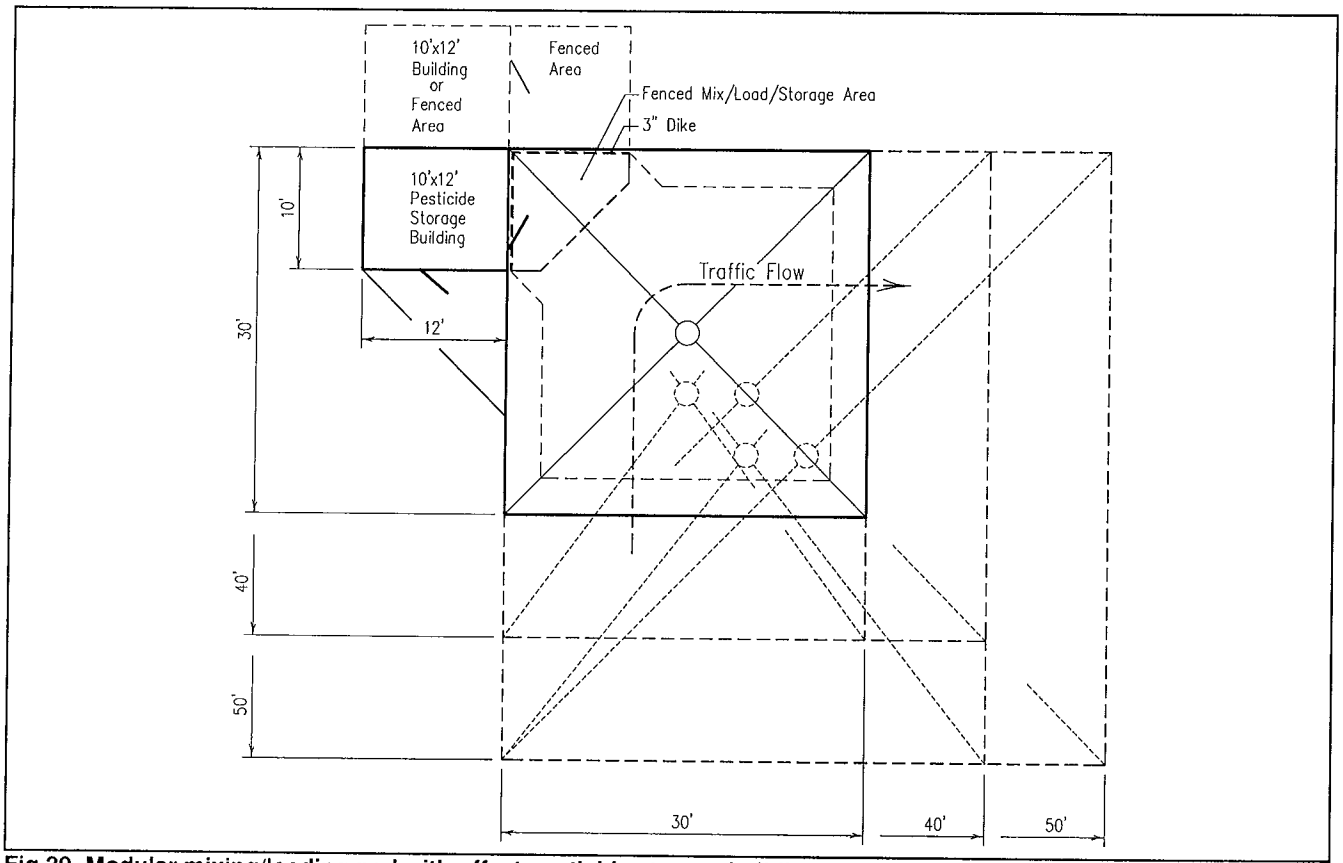

Fig 39. Modular mixing/loading pad with offset pesticide storage building abutting corner of pad.

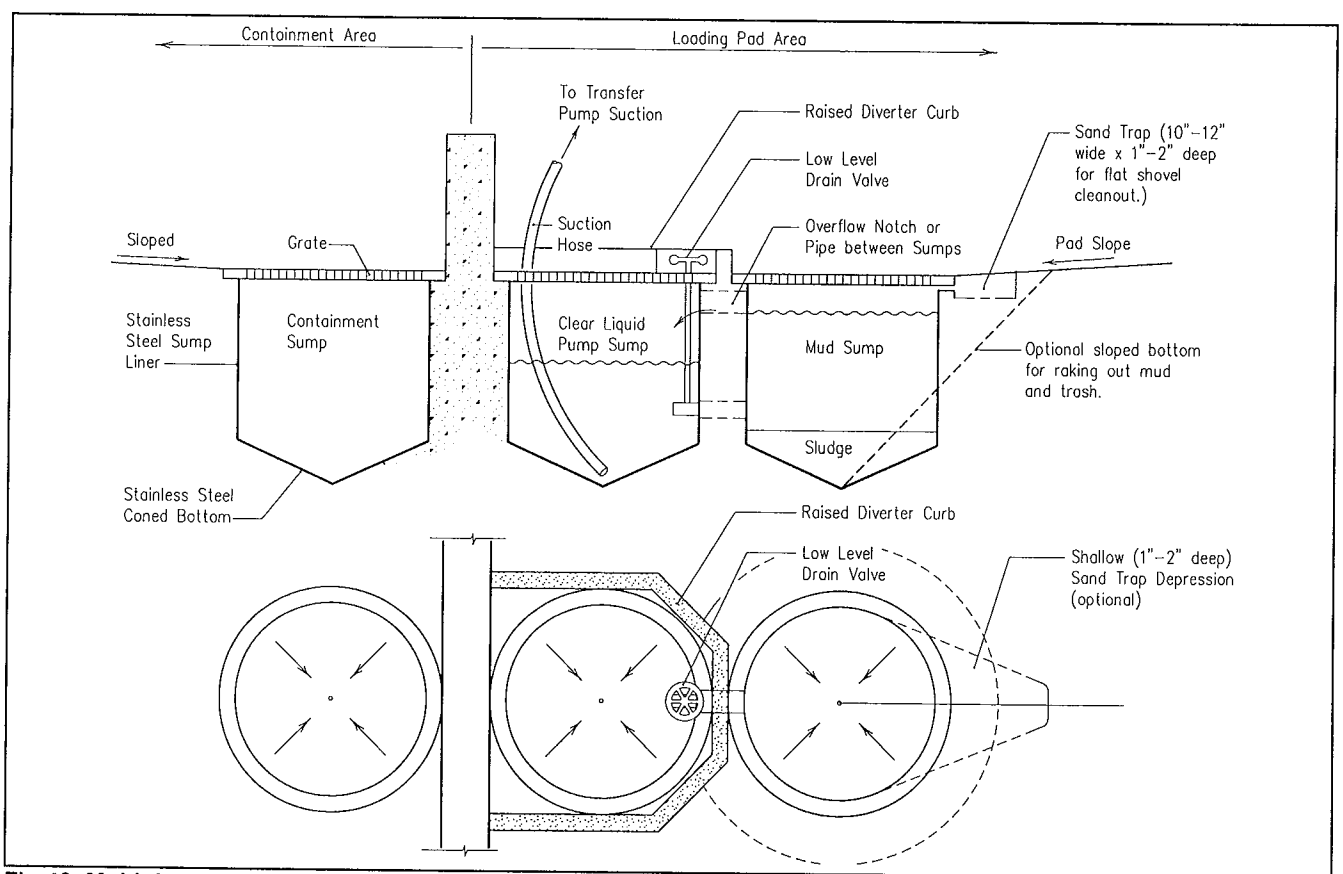

Fig 40. Multiple mixing/loading sump detail for sediment control.

Sump Designs

There are several sump designs that can be used in the mixing/loading pad. A single sump is the simplest and can either be placed monolithically with the mixing/loading pad or a precast concrete or prefabricated stainless steel sump could be installed before the concrete pad is placed. To reduce sludge problems in mixing/loading pad sumps where applicator vehicles are washed, some facilities may need two sumps in series, Fig 40. **NOTE:** Washing sprayers in the field is recommended, but avoid repeated washing in the same location and stay clear of wells, surface water bodies and field tiles and inlets.

Use of a double sump allows segregation of pesticide water and contaminated solids. The first sump acts as a sediment trap or settling basin where larger solids settle out before the liquids overflow into the second sump. Design the first sump for easy sludge cleanout. Water drains around the raised concrete diverter curb into the first sump, then is decanted off the first sump and flows into the second sump. The sump pump or suction hose is placed in the second sump. This water is filtered and transferred into a rinsate storage or waste water holding tank.

A double lined stainless steel sump design is shown in Fig 41. This design allows monitoring of potential leaks from the sump by inspecting the outer sump through the port between inner and outer sump liners. This sump can be fabricated in a range of sizes or dimensions. Install a "stand pipe riser" in the inspection port of a double walled sump so that it can be inspected when liquid covers the sump grate. Lock to prevent vandalism or accidental liquid entry through the unsecured port.

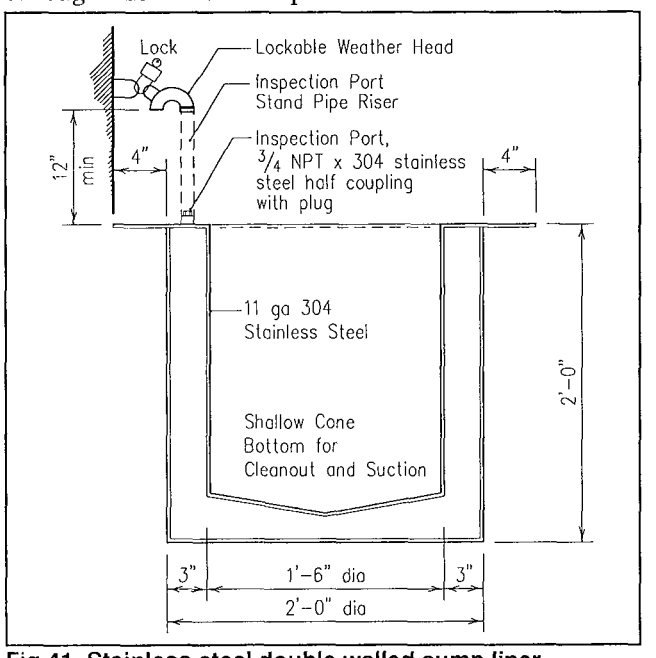

Fig 41. Stainless steel double walled sump liner.

An alternative sump design is shown in Fig 42. A pair of prefabricated stainless steel containers act as primary settling sump and a secondary pump-off sump. Locate these containers in a sump pit or secondary containment area. This design allows easy removal of the sump liner containers when they need to be cleaned out or decontaminated. In this design, by extending the pit design to hold additional removable sump liners, different types of pesticide rinsate can be segregated by diverting to selected sumps. **NOTE:** The secondary sump pit concrete must be carefully sealed.

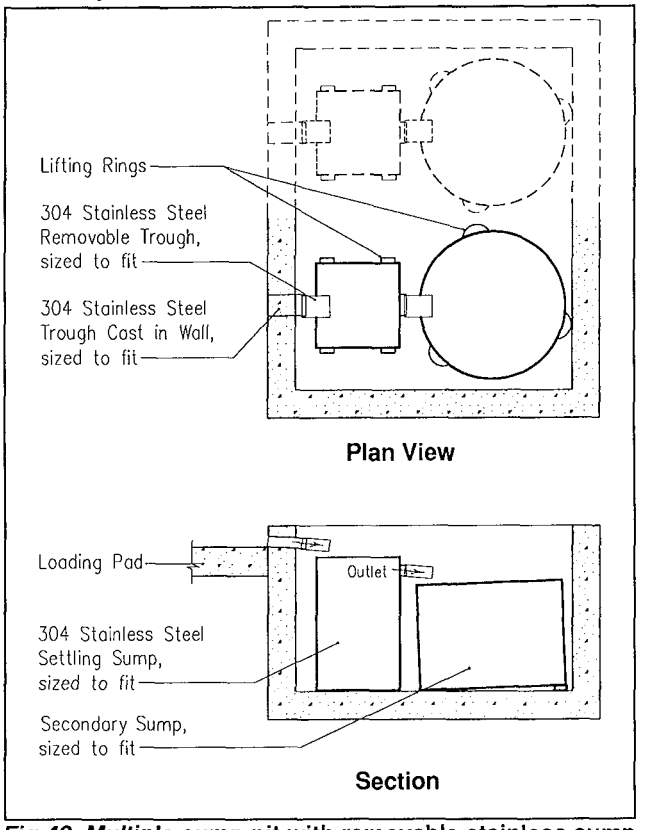

Fig 42. Multiple sump pit with removable stainless sump containers.

Mixing/Loading Equipment Area

Locate batch mixing tanks, water and pesticide transfer pumps and plumbing in the mixing/loading area, Fig 37. Closed mixing system components like pesticide metering tanks, punch/drain/rinse/crush units, rinsing vacuum probes and pesticide container holding, rinsing and drainage equipment, adjuvant venturi eductor and venturi injector plumbing are components that should be considered in planning an efficient, safe mixing/loading system. Position mixing equipment near the containment sump as shown in Fig 43.

Pumps and Pump Containment

In bulk handling systems, install transfer pumps inside their own individual containment dike areas, Fig 44. If a seal in the pump leaks, only the small pump containment area becomes contaminated and requires cleanup. Mount the pump motor base at containment wall height or higher to prevent flooding

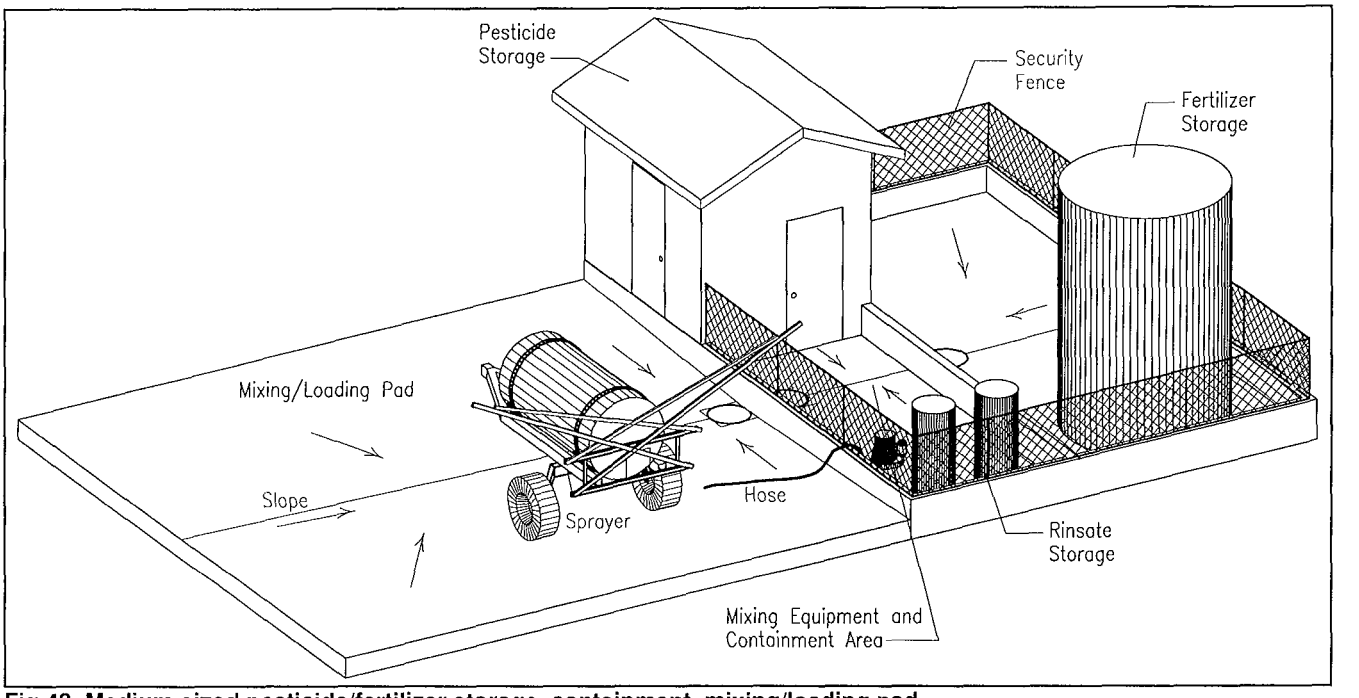

Fig 43. Medium sized pesticide/fertilizer storage, containment, mixing/loading pad.

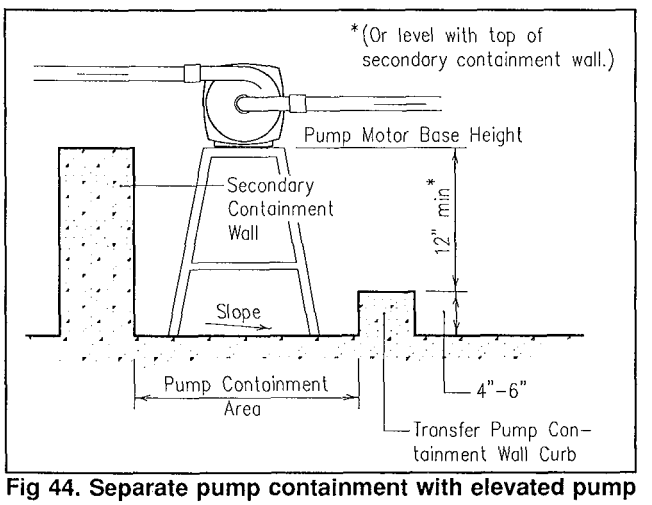

Fig 44. Separate pump containment with elevated pump mount.

the pump, damaging motor windings, and creating an electrocution hazard for workers. A disadvantage of elevating pumps is that higher levels of liquid are needed in water supply tanks to prime pumps.

An alternative to separate pump containment is to place chemical resistant rubber, plastic or stainless steel "drip" pans or tubs under elevated pumps to catch intermittent drips that often occur from pump seals or plumbing connections, especially when switching transfer hoses from suction to discharge connections periodically. Use dry-break hose connectors to minimize drips during frequent hose changes. Install shutoff valves and unions on each side of pumps so they can be easily drained for minimum leakage and removed for repairs. These equipment components help reduce pesticide contamination on floors.

Plumbing Components and Seals

An important part of designing a bulk handling system is selecting metal parts, gaskets and hoses that resist corrosion. Expect high initial cost if low maintenance costs, long life and excellent performance are required. Using the highest quality, most corrosive resistant material is usually the best long-term investment.

Pesticide formulations often contain solvents and surfactants that cause some seal and gasket materials to swell, shrink, soften or dissolve with continuous contact over time. Deterioration is often accelerated by elevated temperatures; this is especially critical when the component is subject to mechanical stress. Select the most chemically resistant materials, such as Teflon, for seals or gaskets that come in direct contact with concentrated pesticides. **NOTE:** Teflon may be incompatible with some pesticides, such as "Prowl" and "Treflan".

Hoses must also be compatible with the pesticides being handled. Hoses manufactured with an inside layer of a cross-linked high-density polyethylene material usually are chemically compatible. Flush hoses and piping after use to extend service life and minimize cross-contamination. Suction hoses must be reinforced for negative pressure or vacuum operation. Collapsed suction hoses can cause cavitation damage to pumps.

Select stainless steel or polypropylene quick-release, dry-break couplers or air-break connectors for plumbing that must be connected on a regular basis, such as hose couplings connecting to pumps, applicator vehicles, bulk tanks or mix tanks. Fit couplings with pesticide or fertilizer resistant "O" rings, seals or gaskets manufactured from Teflon, stainless steel

springs or other chemically resistant material. Check pesticide and fertilizer resistance charts to select appropriate materials, Appendices H, I and J.

Valves

Use corrosion resistant valves made from stainless steel, polypropylene or Kevlar. Minimize the number of valves to operate the system to reduce cost and potential leaks. Mount them in easy-to-reach locations for operator convenience. Use quick shutoff ball valves or plug valves. Provide lockable shutoff valves on outlets of all bulk liquid fertilizer and pesticide storage tanks for security. Use detachable hoses instead of hard plumbing to isolate storage tanks from other plumbing.

Rinsate Storage and Handling

Mark or color-code individually dedicated hoses by the pesticide handled for transfer of rinsates into and out of each individual rinsate holding tank. If dedicated hoses are not used, flush hoses with clean water immediately after handling each pesticide rinsate to avoid cross-contamination of non-compatible pesticides. **NOTE:** Plain water may not clean plumbing satisfactorily. Check product label for proper cleaning and neutralizing procedures.

Do not "hard plumb" or rigidly manifold pesticide rinsate transfer pumps directly to the inlets or outlets of rinsate storage tanks. When using permanent pipe manifolds, rinsate from one tank can accidentally mix with rinsate from other tanks in the collecting manifold. Cross-contamination with rinsate from several tanks could cause serious damage to non-targeted crops or sites. Use hoses with quick release dry-break connectors, cam-lock couplers or other suitable quick couplers so that operators have to make specific decisions and choices when connecting hoses to pump rinsate into and out of each tank. This deliberate process provides more opportunity to evaluate each separate management decision than if complex plumbing manifolds with several valves are used.

Fit rinsate tanks with quick release dry-break and/or cam-lock type fittings for filling into the top and withdrawing from the bottom. Select and position (slope) tanks so that bottom outlets drain the entire tank. Each time a tank is emptied, immediately and thoroughly flush it out to prevent pesticides from drying on tank walls and to wash bottom sediment out. Permanently mount 360° rotating rinsing nozzles in the top of each tank for thorough rinsing and worker safety. Dedicate each tank to only one pesticide or one crop. Cone or hopper bottom tanks make management simpler by improving drainage of all products, including particles that settle out. Hopper bottom tank rinsing and cleanout are easier, compared to flat bottom or horizontal cylindrical tanks. Select tanks with large top access openings for ease of cleanout and inspection.

Use individual hoses to pumps or flexible manifold systems for liquid fertilizer tanks. In case of a major leak or spill, or unusually heavy thunderstorms (25-yr, 24-hr storm) where accumulated rainwater causes liquid fertilizer or rinsate tank flotation, rigid PVC, polypropylene or steel piping manifolds could fracture, causing massive releases and co-mingling of liquid fertilizers or rinsates. Even with a valve directly connected to each tank base outlet, leverage on connected plumbing manifolds could cause pipe nipples to break between the tank wall and the valve. Anchoring tanks and using flexible plumbing are major design requirements.

Keep mixing/loading equipment inside a security fence. Security fences, walls, buildings or other safety measures are needed to keep unauthorized personnel, children or animals from pesticide and fertilizer storage areas. Operators are responsible for contamination and injury caused by vandals, even if a reasonable level of security is provided, but locked tank base shutoff valves and fences can help minimize legal risk and possibly reduce insurance rates.

Closed Mixing Systems—CMS

Closed mixing systems (CMS) greatly minimize human exposure to concentrated pesticides. Ideally, closed system transfer is accomplished by vacuum. With vacuum transfer, hose or plumbing leaks allow air into the system, which slows handling rates, but does not result in spray or rupture-type failures of pressurized handling systems. True closed systems:

- Allow removal of pesticides from sealed containers.
- Allow measuring and transferring pesticides to mixing or sprayer tanks and rinsing empty containers.
- Allow handling of system plumbing and hoses without exposing personnel to pesticide vapors, mists, splashes or spills.
- Provide improved accuracy in pesticide measuring.
- Reduce mixing/loading site contamination.
- Reduce the risk of back siphonage of pesticides into water supplies.
- Reduce the need for full protective suits. Protective gloves, full face shield or goggles and clean clothes are still recommended.

Fig 45 is a diagram of a modular vacuum powered pesticide CMS. It uses a venturi injector mounted on the pressure side of the pump to develop vacuum. This venturi design has a high-flow bypass. When pesticide measuring and transfer is complete, the by-pass valve provides a much higher handling rate (2-3 times increase) for rapid completion of sprayer tank filling.

Where small mixtures are needed, use a supplemental vacuum pump to evacuate the metering tank and draw pesticides into the tank pump to keep from having to pump excessive water through the venturi. Then use the venturi injector with by-pass valve for transfer and mixing/loading operations, Fig 45.

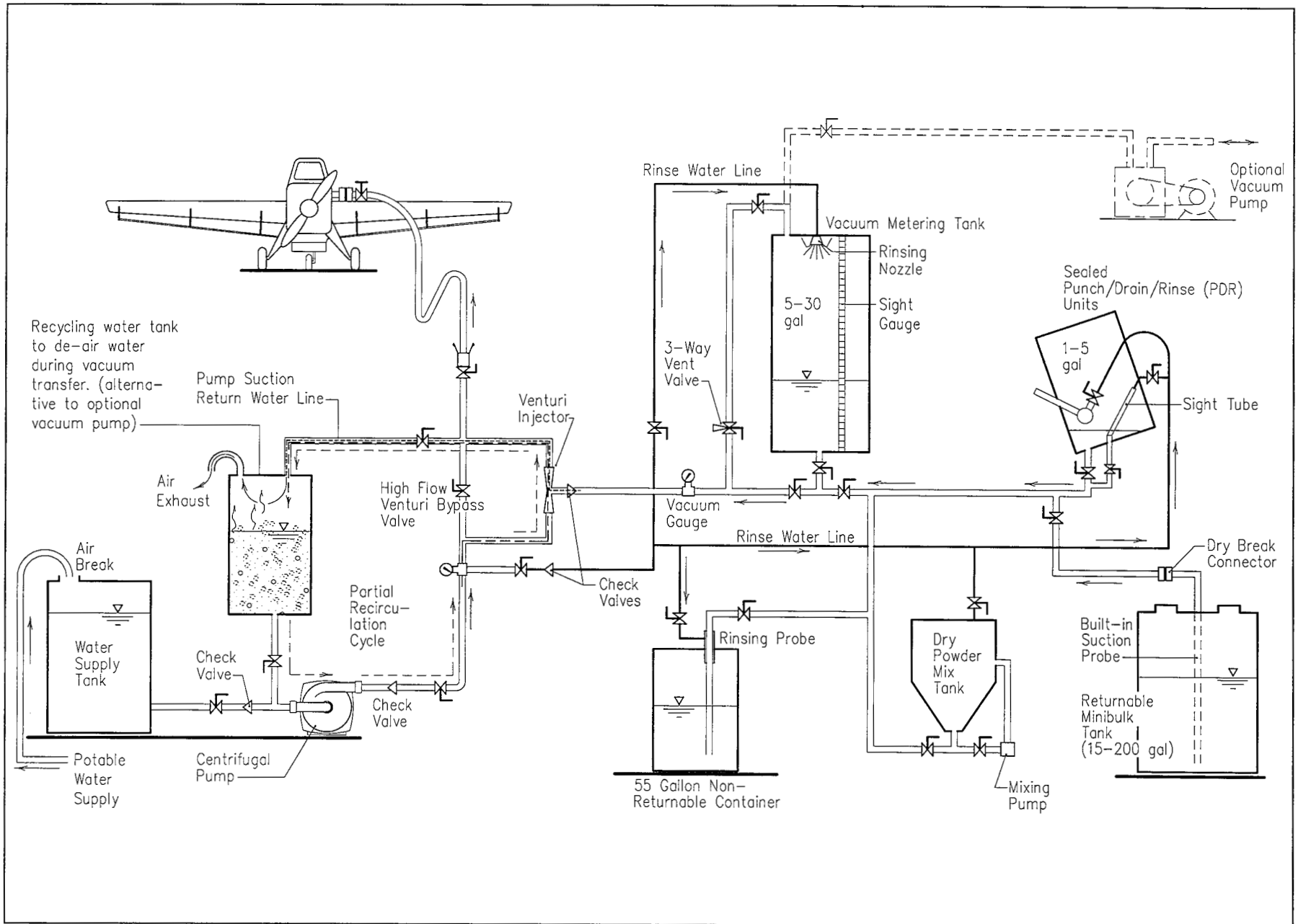

Fig 45. Modular vacuum powered (venturi injector) closed liquid pesticide mixing system flow diagram.

An alternative is to pump makeup water in a closed loop from and back to a small enclosed water holding "de-airing" tank that is vented to the atmosphere, and dedicated for vacuum transfer use. Thus, the amount of water initially pumped into the applicator tank is significantly reduced. This is very important where total transfer volume and available transfer time is limited when making up small batch mixes and pesticide must be transferred initially from shipping or minibulk containers to the metering tank. Plumb this "de-airing" tank to use this water first when filling the applicator tank as pesticide vapors may be absorbed by the closed loop water, so this water must be used immediately to finish making up that load.

NOTE: If a de-airing tank bypass plumbing loop is used as part of the CMS, the discharge hose valve to the spray tank or aircraft hopper may still need to be partially open so that 1/3-1/2 of the liquid flow continues to the applicator tank. Complete recycling of water through the return loop air separator tank (discharge hose valve completely closed) may cause the return line water to be partially aerated (partially filled with air bubbles) from the vacuum tank if the air separator tank volume is marginal. If this occurs, pump pressure will drop, pump cavitation may occur and venturi vacuum level may remain low, slowing or stalling evacuation of the metering tank.

Venturi injectors

Venturi injectors, Fig 46, are static devices that create a vacuum to pull liquid pesticides from containers. The venturi is placed on the outlet (pressure) side of a pump and as the motive liquid (usually makeup water) flows through the venturi restriction, line pressure drops, creating a vacuum that evacuates air from piping and the metering tanks. With appropriate valve settings, pesticides and rinse water are also transferred by the venturi suction.

Venturi injector systems are simple, economical and can rapidly transfer relatively low viscosity pesticides effectively. They are easily incorporated into existing pesticide handling systems. Choose venturi injectors constructed of polypropylene, stainless steel or other corrosion resistant material. Flush injectors (with clean water after each use) to minimize cross-contamination of pesticides. **CAUTION: Plumbing connected to plastic venturi injector side inlets must be flexible or carefully braced because side inlets are structurally weak and break easily.**

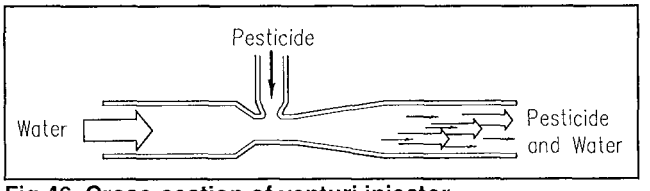

Fig 46. Cross-section of venturi injector.

Venturi injector systems are naturally safer than pressure transfer systems because full strength pesticides are drawn from containers by vacuum or suction. Then, pesticides are mixed with water in the injector, so a dilute strength pesticide/water mixture is transferred under low pressure into applicator tanks.

Metering tanks

Vacuum metering tanks measure or meter the amount of pesticide needed for sprayer tank mixtures. Metering tank sizing depends on the amount of pesticide to be transferred from shipping containers as well as the amount needed for a full sprayer load. Pesticide is evacuated from "one-way" containers with external self-rinsing probes, or from SVR or minibulk returnable tanks with non-rinsing internal suction probes connected by dry break connectors to suction hoses.

Punch/drain/rinse (PDR) containers as shown in the upper right hand corner of Fig 45 are non-pressurized metering tank systems. These units allow 1, 2.5 or 5 gal plastic or metal containers to be set inside, and the cover latched and sealed. The side lever operates a sharp probe that punches a hole in the container bottom. The pesticide drains into the base of the stainless steel tank. A sight tube is used for measuring the pesticide.

After the pesticide has been drained from the PDR, either to the metering tank or the applicator tank, the container is power-rinsed with clean water forced through the side lever pivoting hole punch mechanism, which is rotated during container rinsing, and the rinsate is transferred directly to the sprayer. The empty, power-rinsed container is removed and the next pesticide container is set into the unit for draining. Because holes are punched in the bottom of each container, PDR unit use is limited to completely draining and transferring the liquid from each container.

An area that needs additional operator attention and maintenance on metering tanks are metering sight tubes or sight glasses. These devices are usually clear or opaque plastic or glass tubes about 3/8"-5/8" I.D. that are externally mounted to the top and bottom of metering tanks to allow a visual indication of internal fluid levels. With some pesticides or fertilizers, sight tubes often quickly "cloud up" due to repeated dried residue layers. Connect a power-rinsed water line to the top of each metering tank sight tube to flush it out each time the tank is rinsed so pesticide layers do not obscure the visual tank liquid levels and to minimize cross-contamination of pesticides.

Rinsing probes/internal probes

Self-rinsing probes are used to withdraw pesticides from shipping containers. When containers are empty, rinse water is sprayed inside, washing down pesticide residues that remain as a film inside on the top and walls of containers, plus a few ounces of pesticide in the bottom. Rinsewater is evacuated out of the container and transferred directly into the sprayer, Fig 47.

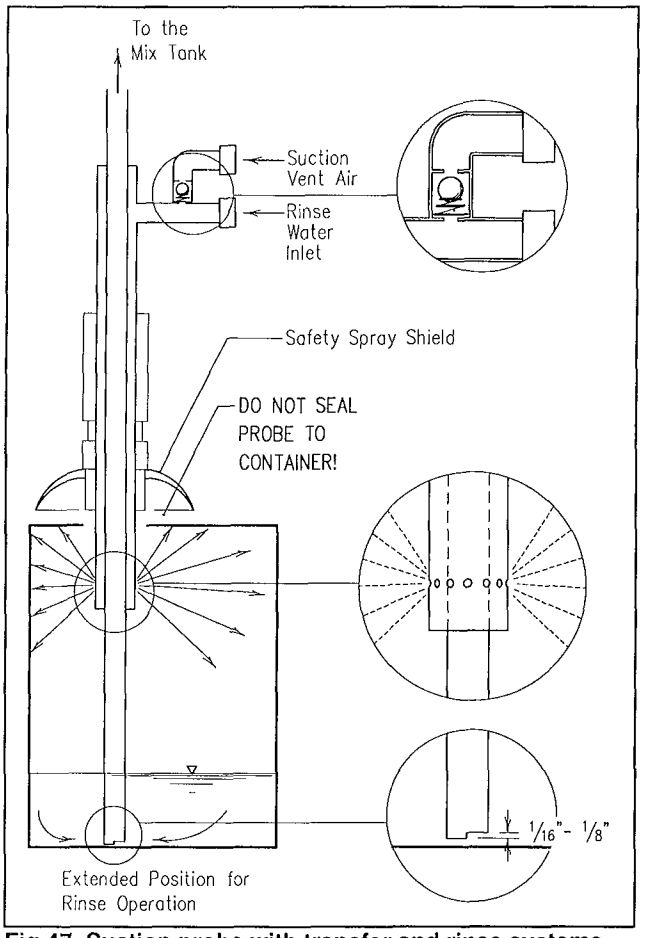

Fig 47. Suction probe with transfer and rinse systems.

External rinsing suction probes are not "true" closed mixing system components because containers must be opened and the probe inserted. Some probes are screwed to the container threaded pour spout creating a seal while others have an air gap between the container opening and probe tube through which vapors can escape and air can enter to ventilate the container volume above the liquid level during withdrawal of pesticide. Thus, even though rinsing probes are used with "closed mixing systems", workers are at some risk while using most external probes.

Care must be used with all probes when removing pesticides, during rinsing and during probe insertion and removal. In cases where the probe body is screwed to the container threaded pour spout, high vacuum build-up can collapse the container sides inward if probe suction air venting is inadequate. This may cause the container sides to crack and leak. Another hazard may occur while rinsing the container at water line or pump pressure (30-60 psi). Without adequate container venting, the internal pressure can cause the container to rupture, with the potential of spraying pesticide or rinsate on workers.

CAUTION: Before using probes that seal to containers, be sure the probe has adequate vent air flow for positive and suction pressure relief during both withdrawing and rinsing operations. Periodic stopping of suction or rinsing operations may be required if the vent air relief volume is marginal. If vent air flow is inadequate or not provided, it is safer to leave the probe disconnected from the container opening to allow vent air movement through the connector opening during suction and rinsing operations.

Another safety hazard that must be considered when using rinsing probes to rinse empty (or partially empty) containers is overfilling containers and flushing rinsate out through the open container inlet gap. Common practice is to operate suction valves and rinse-water line valves simultaneously so initial highly concentrated rinsate is sucked out immediately. Usually 30-45 sec is adequate for power rinsing at rinse water flow rates of 5-8 gpm.

Refillable bulk containers

EPA is encouraging the agricultural pesticide industry to use two-way or refillable containers and to adopt two or three common fittings for shipping containers. Pesticide and fertilizer companies and associations are moving toward standardizing bulk and/or minibulk shipping container fitting designs.

Minibulk or refillable containers have built-in internal suction probes with dry-break connectors to prevent external drips on and around the container. Some companies supply these containers with a pump and meter. At least one repackaging company is using compressed air tanks connected to minibulk or SVR containers to transfer pesticides by pressure. Refillable containers are permanently marked for use with only one type of pesticide and are not rinsed by the applicator or dealer. They are returned to the manufacturer or repackaging agent and repeatedly refilled with the same pesticide on a continuous recycling basis. Refillable containers comprise true closed system components when used with a vacuum/suction type pressure tank transfer system or CMS.

Mechanical Transfer/Open Mixing Systems

Dry pesticides are mixed with water in batch mix tanks by adding part of the required water, pouring in the dry pesticide, stirring into a slurry, adding the balance of the mix water, then recirculating the mixture in the tank for thorough mixing. Batch mixtures are then transferred into applicator tanks, mix tanks are rinsed and the rinsate transferred to the applicator tanks. Although batch mixers vary from fully open topped tanks to units with full hinged covers, they are not sealed and therefore are considered open mixing systems and should be in well ventilated areas. Protective clothing and full face respirator with appropriate canisters for the pesticides being mixed are recommended when using open mixing systems.

Liquid pesticides are often mixed with the carrier before they are added to an applicator tank. A simple method is shown in Fig 48. In this system, the liquid pesticide is removed from a container with a suction

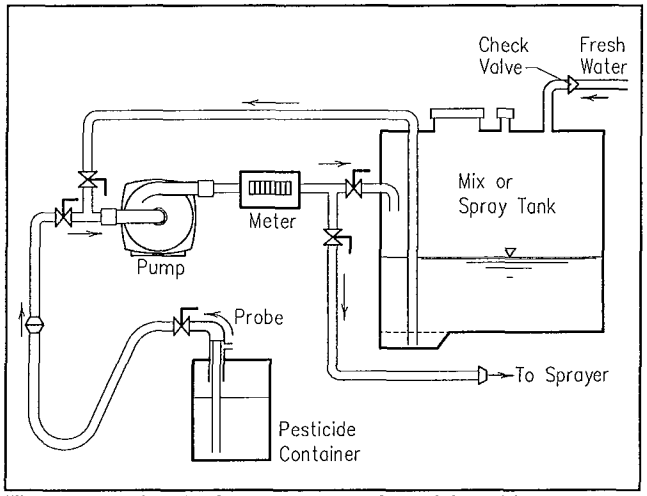

Fig 48. Mechanical pump-type closed handling system with mixing tank.

probe using the pump suction and is pumped through a meter into a mix tank. Then the mixture is recirculated from the tank through the pump and an agitator nozzle in the bottom of the tank for mixing. When completely mixed, the pesticide is transferred to the sprayer. Variations of this system, such as the use of different probes for removing the material from the container, measuring columns, metering tanks or measuring probes in place of in-line flow meters, and venturi injectors can be incorporated. Batch mixing tanks are usually designed with jet agitators on 300-600 gal tanks or mechanical mixing paddles on larger mixing tanks (500-1,000 gal).

Pesticide measurement

Accurate methods of pesticide measurement are essential to good pesticide application management. Pesticide liquid meters similar to those used on fuel pumps are fast, easy to use and operate on the principle of positive displacement. However, accuracy and repeatability may be a problem on less expensive rotary vane or "turbo" meters. All rotary vane meters are inaccurate when used on the vacuum side of pumps or venturi injectors because of air entrained during suction.

For pressure systems, more expensive meters are usually the most accurate and provide the best corrosion resistance. Mechanical or electronic digital readout meters are available that indicate volumes in tenths or hundredths of a gal. Meters must be certified when they are used to measure products that are to be sold and require retesting or calibration at least yearly by state government testing and measures departments. Because the specific gravity of products varies with temperature, it is sometimes necessary to recalibrate meters to control accuracy, but meters that require calibration are usually the best type. Some meters require recalibration by referring to the operator's manual for each significant change of viscosity used.

Sight tubes on measuring columns are simple and easy to use but are only accurate if the container is level. Small-diameter sight tubes (1/4"-3/8" I.D.) may indicate a different level than what is in the container due to viscosity and surface tension of the liquid against the tube wall. Larger tubes (1/2"-5/8" I.D.) provide faster, more accurate metering response. A small-diameter, tall container improves metering accuracy for a given volume metering tank. Use side guards to protect external glass tubes or plastic tubing from breakage or damage to reduce the hazard of contacting a concentrated pesticide. All sight tubes must have a valve at the base of the column that can be closed for emergencies in case the tube is leaking or broken. Plastic or Tygon sight tubes cloud over and require periodic replacement, but are safer than glass tubes from a breakage standpoint. Where plastic sight tubes are desired, choose nylon or polypropylene materials. Power-rinsed water lines connected at the top of sight tubes may eliminate or reduce the frequency of replacement. Select tubes for rinsing and easy replacement.

Metering tanks made of stainless steel with one or more glass windows mounted in the side are available commercially. These must also be kept level to be accurate. Measuring tanks with windows have an advantage over tanks with only sight tubes, as the liquid level is directly visible, and the viscosity of the pesticide and liquid surface tension does not affect measurement as much as sight tubes. But tanks with glass windows are usually more expensive and windows are subject to leakage. All measuring or metering tanks must be equipped with internal rinsing nozzle provisions. Rinse tanks and sight glasses immediately after use before pesticides dry on inside surfaces to avoid cross-contamination problems.

Pesticides are also measured or metered by weight. The unit weight of the active ingredient (AI) is listed on the pesticide container as a ratio or percent of the pesticide product weight. A measuring container can be mounted on a scale platform or suspended on a load-cell and filled by vacuum or pressure transfer to the desired weight. Tank fill and discharge hoses must be flexible on these units to minimize measurement inaccuracies. Fig 49 shows a platform load-cell type scale. Fig 50 shows a single load-cell suspension or tension mounting system. For larger facilities, load-cells or strain gauges can be placed on the mixing tank to eliminate the need for intermediate weighing equipment. On portable load-cell measuring systems, lock load-cells rigidly and remove load while transporting. Moving this type of system may require frequent calibration of load-cell readout units. If used outdoors, wind shields and horizontal stability brackets must be used to minimize wind pressure/swaying effects. Load-cells, control/readout units and connecting electrical or control circuitry wiring cables must be designed for use in pesticide and outdoor environments.

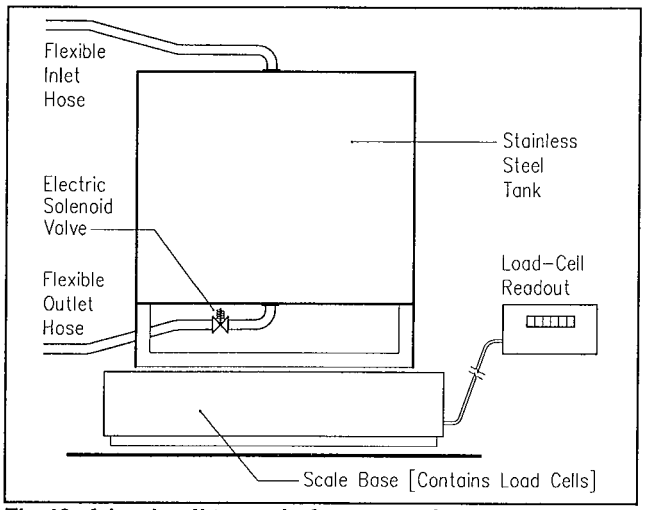

Fig 49. A load-cell type platform metering scale.

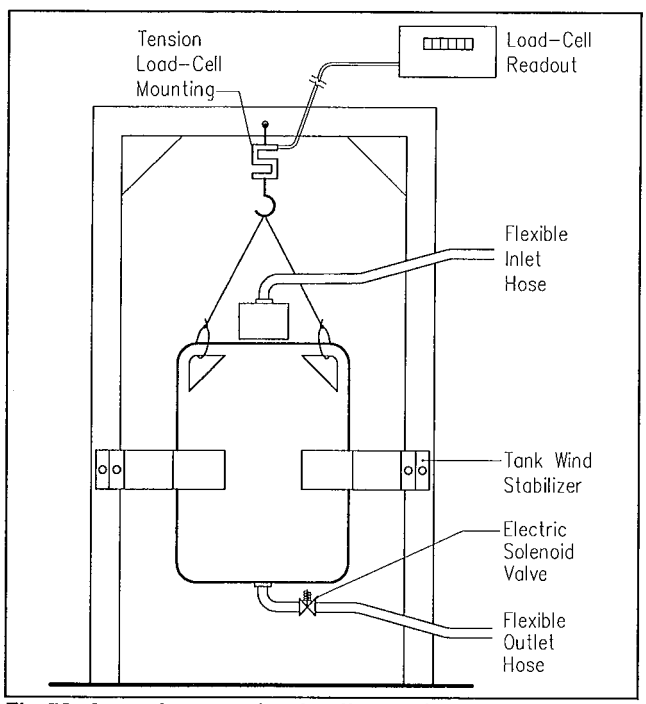

Fig 50. A tension-type load-cell metering scale.

Container Rinsing for Disposal

One-way containers must be pressure-rinsed or "triple hand-rinsed" prior to disposal. Pressure-rinsing for 30-45 sec immediately after initial draining is usually far more effective than triple hand-rinsing. Fig 51 illustrates a method that can be used for pressure-rinsing pesticide containers. Fig 47 illustrates a rinsing probe transfer system. A disadvantage of both rinsing methods is that container caps are not rinsed during container rinsing. A bucket with detergent can be used with a screen basket to rinse one-way pesticide container caps.

The pressure-rinse system shown in Fig 51 is designed to rinse containers inverted over a pesticide mixing tank fill opening. This rinser contains a sharp probe that can punch through the bottom of small

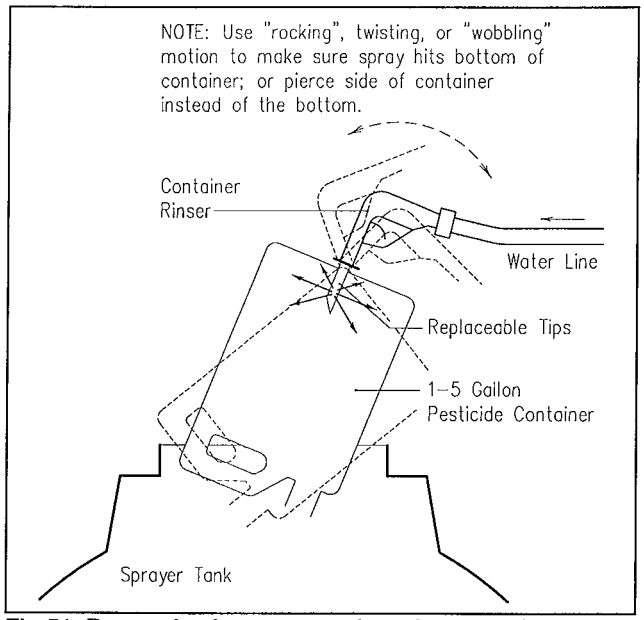

Fig 51. Pressurized water container rinse nozzle.

plastic or metal containers (5 gal or less). The probe contains a series of holes around the nozzle shaft that must be inside the container. With the container inverted over the spray tank fill hole, water is turned on to rinse the container. Flush the container for 30-45 sec as soon as it is emptied to soak and remove residues from container. Avoid letting products dry out before rinsing. When rinsing with hand held pressure rinse nozzles, piercing the side of the inverted container allows better flushing of container bottom. Use a rocking, twisting and wobbling motion during rinsing to direct water jet impact to all interior surfaces.

The rinsing probe transfer system shown in Fig 47 is not a pressure rinse system. It is designed to drain the container of pesticide, then discharge clear water from the rinsing probe water chamber through a series of holes directly below the fill cap. At the same time the probe evacuates the rinsate out and transfers it into the spray tank. One-way pesticide containers are not designed to withstand vacuum or pressure. Caution must be used to prevent collapse or rupture of the container if adequate venting air relief is not provided when the probe body is sealed to the container opening.

Invert freshly rinsed containers on a draining rack in a rinsate drain tank, Fig 52a, to allow all rinsate to drain from containers for easier rinsate recovery and reuse. Power rinse nozzles can be added to rinsate drain tanks, Fig 52b. Several companies have developed portable hose mounted rinse nozzles (utility and commercial models) that pierce the side of plastic or metal containers for pressure rinsing and draining. For heavy use, commercial versions are more rugged and last longer than utility models, and are better suited for metal containers. Most nozzles have replaceable steel piercing probe tips. Make sure nozzle probe tip holes direct spray back toward the

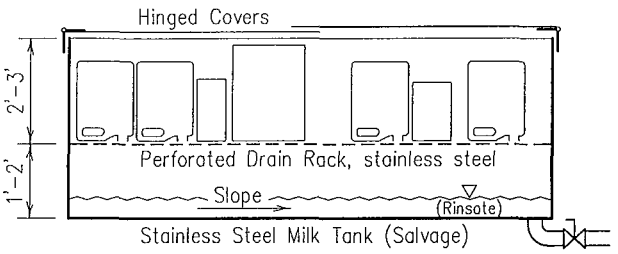

52a. Rinsed pesticide container drain rack.

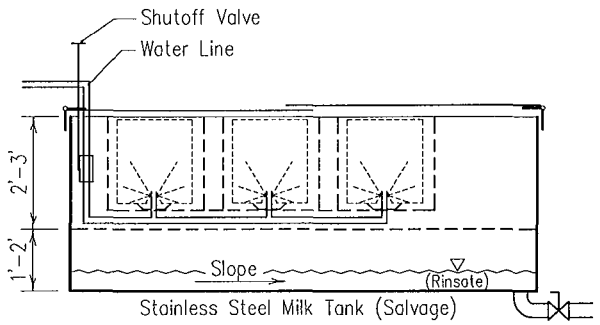

52b. Pesticide rinsate drain tank with power-rinsing nozzles.

Fig 52. Pesticide container rinse/drain tank with rack.

part of the container that is pierced for complete rinsing. Some early models use only four holes drilled perpendicularly to the probe tube, which provides an inadequate spray pattern. All pressure rinsers must be equipped with a backflow prevention device.

Rinsate Storage Tanks

Rinsate tanks are used for temporary separation and holding of diluted pesticide field mixture rinsate (typically 10:1 dilution ratio from field mixtures). After using each rinsate, wash the inside of the tank and transfer that liquid to the sprayer tank as makeup water along with the field mix rinsate as a continuing management process throughout the spraying season. Strategies to minimize rinsate storage, handling and disposal are discussed in Chapter 11, Rinsate Management and Waste Disposal.

When selecting storage tanks, check with both the pesticide manufacturer and tank manufacturer to be sure the tank is resistant to corrosion from the pesticide being stored. Cross-linked, high density polyethylene or fiberglass tanks of 200-600 gal volumes are usually a good economical selection for rinsate storage. The ability to view liquid levels through plastic or fiberglass tank walls improves management. Inspect polyethylene tanks annually for signs of aging and deterioration to avoid a structural failure. Tanks that are under-roof and protected from direct sunlight and weather usually have a longer service life than those stored in the open.

Galvanized or standard mild steel tanks are not recommended because they corrode quickly causing rust and metal scalings to plug strainers and plumbing. Type 304 or 306 stainless steel tanks are suitable, but are more expensive. Mount pesticide, rinsate and fertilizer storage tanks 3"-6" above the concrete floor for easy location and identification of leaks. Mount the tanks high enough to allow full operation of valves and other equipment. Some operators elevate rinsate holding tanks so they can gravity-flow into mix tanks or sprayer tanks. Setting up to use gravity flow may be expensive so conduct a cost/benefit analysis, comparing gravity flow to pumping.

Water Supply Tanks

Place water storage tanks close to mixing/loading equipment, outside and adjacent to primary and secondary containment pads. Water tanks do not require containment space, but may be stored inside fenced containment to minimize vandalism if space is available and containment volume is properly sized. However, containment volume must be sized for the water tank if it is the largest tank.

Air Gaps, Check Valves and Reduced Pressure Backflow Prevention Devices

Water lines connected to pesticide mixing and rinsate storage tank systems are vulnerable to backflow of pesticides and fertilizers into the water system. Install positive back-flow or anti-siphon protection on water systems that provide water to agricultural pesticide and fertilizer storage and handling operations.

Two accepted methods of backflow protection are the air-break separation and an approved backflow prevention assembly. Individual conventional check valves will not provide reliable backflow protection of water supply lines.

An air-break separation is a vertical air gap between the free flowing discharge end of a water supply line and the fill opening of a water storage tank. This method requires removal and replacement of the tank opening cover each time the tank is filled. An approved separation should be at least 1" or two times the diameter of the supply line measured vertically above the overflow rim of the tank. The supply line is usually fitted with a float controlled shutoff.

A reduced pressure principle backflow prevention assembly is usually approved for use between the water supply line and the pesticide handling facility. Check local regulations to be sure they are permitted.

Install check valves, Figs 53 and 54, in all rinse water or mixture handling lines. Valves for horizontal piping must be spring loaded, Fig 54. Valves in vertical piping can be gravity activated valves such as pump type foot valves, Fig 53. The spring-loaded valve can be used in any position. Check valves usually work well but are known to fail occasionally due to dirt particles or rust scale wedged between the valve and the seat. Check for good operating and proper back flow sealing prior to operating the complete system. Provide shutoff valves to isolate system components for maintenance or emergencies.

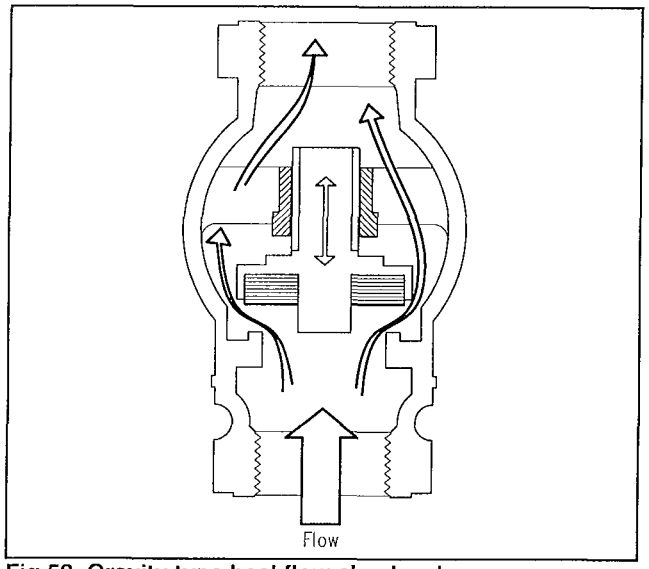

Fig 53. Gravity type backflow check valve.

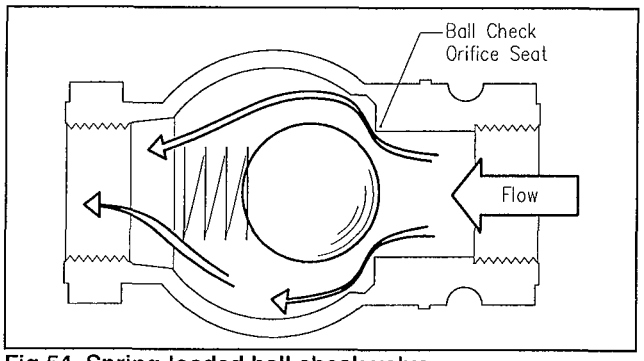

Fig 54. Spring-loaded ball check valve.

Alternative Mixing/Loading Facilities

Watertight, high-strength, reinforced concrete is the preferred material for constructing pesticide and fertilizer mixing/loading pads. Reinforced concrete with flexible chemical resistant surface sealers for pesticide and fertilizer containment, with surface sealed asphalt drives and approach ramps are suitable for use with liquid pesticides and fertilizers. Engineering designs in special circumstances may incorporate alternative materials such as prestressed or post-stressed transportable or in-place concrete modules, asphalt, steel, plastics (polyurethane, polyurea, advanced technology synthetic materials) depending on the type of pesticide and fertilizer, the use of the construction material and the facility use.

Temporary/transportable synthetic facilities

Several manufacturers market portable, flexible or inflatable walled, synthetic, drive-over mixing/loading pads that fold up for transport. Use these units only at remote or satellite operations for temporary field mixing/loading to catch drips and spills, not for permanent mixing/loading facilities. Use small AC or DC powered sump pumps to recover diluted pesticide spills and rinsate.

There are also several types of shallow, rigid-walled plastic or fiberglass trays on the market, approximately 8'x16' and 6" high, with elevated vehicle tracks or ramps that allow truck or field sprayers to be driven into the containment for loading. These are also suitable for temporary use only. There may be more development and use of portable mixing/loading systems as applicators try to reduce the risk of field spills.

Deeper (18"-24") fiberglass containment units are available that can be transported to permanent facility sites in sections for on-site assembly. They are field "seamed" or joined together to use for pesticide rinsate recycling and containment of mixing/loading equipment. Multiple units can also be incorporated for liquid fertilizer tank, pesticide storage and rinsate tank secondary containment.

Bulk Unloading Facility

Large liquid fertilizer outlets may need a separate area for receiving bulk truck shipments while the primary load-out pad is in use, Fig 7. For bulk unload facilities, use a drive pad with level side curbs or walls and floors that slope to a shallow trough at the center (6"-9" deep) which drains to a small, shallow sump to provide the required containment volume. Locate it along one side of the liquid fertilizer bulk storage containment pad. The bulk truck unloading pad should contain more holding volume than the largest transport load plus the storm water level from at least a 25-yr, 24-hr storm.

One company is now prefabricating three-section modular concrete containments for field assembly that are connected and seams are sealed on site. This may be a suitable solution for loading/unloading bulk transport trucks or liquid fertilizer applicator trucks.

9. CONCRETE[9]

Soils, Subgrade and Subbase

For concrete floors to carry the design load successfully without deterioration, design and construct the subgrade as carefully as the floor itself. A subbase, over the subgrade, is not mandatory, but does add some benefits in construction and performance.

Subgrades

The subgrade is the original ground, graded and compacted, on which the concrete floor or pad is placed. The subgrade is usually improved by drainage and/or compaction. Concentrated loads are spread over large areas by the concrete slab so pressures on the subgrade are usually low. Concrete floors do not usually require strong support from the subgrade, but the subgrade must be uniform, without abrupt changes from hard to soft. The upper portion of the subgrade must have uniform material and density. The strength of the soil—its supporting capacity and resistance to movement or consolidation—is important to the performance of concrete slabs, particularly when the slab must support extremely heavy uniform loads like flat bottom storage tanks. Soil strength is affected by the degree of its compaction (density) and its moisture content. Compaction by rolling, tamping or vibrating increases soil density. It is the lowest cost method of improving the structural properties of the soil. Soil density is measured in terms of its mass per unit volume.

The subgrade soil must be classified to identify potential problem soils, see *PCA Soil Primer*, Appendix A. Problem soils are highly expansive, highly compressible or do not provide reasonably uniform support. Where problem soils create nonuniform conditions, correction is most economically and effectively achieved through subgrade preparation.

Subgrade Preparation

Minimize variations of support under the slab to construct a reasonably uniform subgrade. The following are major causes of nonuniform support.

Expansive soils

Abnormal shrinkage and swelling of high-volume-change soils create nonuniform support, which can cause the concrete slab to become distorted. Compaction of highly expansive soils when they are too dry can lead to detrimental expansion and softening of the subgrade during future wetting. If expansive soils are too wet when placing a concrete slab, subsequent drying and shrinkage of the soil may leave portions of the slab unsupported. Selective grading, crosshauling from one part of the site to another, and blending of subgrade soils may be required to obtain uniform conditions in the upper part of the subgrade. For heavy loadings or poor soil conditions, hire a competent soils engineer to make a soils investigation, and design and submit a subgrade construction plan.

Hard and soft spots

If the subgrade provides nonuniform support, the slab will bridge over soft spots and bear on hard spots and eventually crack under heavy traffic loading. Take special care when excavating and backfilling to prevent localized soft or hard spots. Uniform support cannot be obtained merely by dumping granular material on the soft spot. Moisture and density conditions of replacement soil should be similar to adjacent soil. At transition areas where soil types or conditions change abruptly, mix the replacement soil with the surrounding soil by crosshauling and blending to form a transition zone with nearly uniform support.

Backfill

Choose fill material that can be thoroughly compacted to improve the subgrade or raise the existing grade. Process rubble from building or pavement demolitions through a crusher because large pieces are difficult to compact.

Backfill underfloor drain tile trenches with soils like those surrounding the trench and compact it in layers to duplicate moisture and density conditions of adjacent soils. Avoid placing plumbing and utility lines under secondary containment facilities. Never place wash and rinse water drain pipes underground. Restore the original uniformity of the subgrade. Poorly compacted subgrade can cause subsequent settlement problems and premature slab failure.

Frost heaving

In cold regions, frost heaving can cause cracks and serious structural damage to concrete floors or pads. To reduce frost heave problems, drain water away from concrete slabs or walls. Construct a runoff control system around the secondary containment facility to keep water from entering the subgrade or base materials. Watch the runoff control system carefully for two to three years after construction as the landscaping around the site settles. Avoid any ponding near the site. In some cases, it may be necessary to build diversions or provide some drainage around the

---

9 Gerald L. Riskowski, Agricultural Engineering Department, University of Illinois at Urbana-Champaign; David W. Kammel, Agricultural Engineering Department, University of Wisconsin Cooperative Extension, Madison; Ronald T. Noyes, Agricultural Engineering Department, Oklahoma State University, Stillwater. The authors acknowledge the important contributions of Jay A. Runestad, PE, Portland Cement Association and North Central Cement Promotion Association.

sites to prevent water from running through the site. Drain runoff from nearby buildings or lots away from the site by properly placed gutters and/or curbs.

Subbases

A subbase is a thin layer of granular material placed on top of the prepared subgrade. It is not mandatory for slabs on ground. However, when a uniform subgrade is not produced by grading and compaction, a granular subbase provides a cushion for more uniform support by equalizing minor subgrade defects. The granular subbase can also provide a capillary break to reduce water transfer and a stable working platform for construction equipment. It is seldom necessary or economical to increase the supporting capacity of the subgrade with a thick subbase. Increasing subbase thickness beyond 4" results in only minor increases in subgrade support. Granular material for the subbase can be sand, sand-gravel, crushed stone or combinations of these materials. A satisfactory dense-graded material will meet the following requirements:

- Maximum particle size: Not more than 1/8 subbase thickness.
- Passing No. 200 sieve: 15% maximum.
- Plasticity index: 6 maximum.
- Liquid Limit: 25 maximum.

For more information on subgrades and subbases, see *Subgrades and Subbases for Concrete Pavements*, Appendix A.

Vapor Barrier

Do not place concrete **directly on a vapor barrier** because it prevents drainage of excess bleed water from the slab base during curing. The resulting uneven drying between the top and bottom of the slab aggravates plastic and drying shrinkage cracking; see *Cracks in Concrete: Causes and Prevention,* Appendix A. Provide good drainage around the facility and a granular fill under the concrete to reduce the exposure of the concrete to subgrade moisture. If an impermeable coating is used on the top of the concrete, water vapor passing up through the concrete is sealed in the slab which may eventually cause problems with the coating. A vapor barrier could prevent this problem with water vapor and impermeable coatings, but would cause excessive cracking if placed directly under the concrete. If a vapor barrier is used, place a 3" layer of compacted, self-draining granular fill between the vapor barrier and concrete to reduce cracks and protect the vapor barrier, see *Concrete Floors on Ground,* Appendix A.

Concrete

Concrete Quality

High quality concrete is extremely important for secondary containment facilities to resist deterioration from pesticides and fertilizers and to maintain a watertight facility throughout its design life. Low quality concrete experiences rapid surface deterioration due to chemical attack, physical abuse and weathering, and develops cracks which increase leakage and maintenance expense. The surface durability of a concrete slab depends on concrete strength. Surface durability improves with a reduction in water content, an increase in cement content, or both, either one of which increases strength. The quality of the mortar is critical; the hardness and toughness of the coarse aggregate becomes significant only after the surface mortar has worn away. In flatwork, the workability of the concrete and the finishability of the surface are as important as the strength, because they significantly affect the quality of the top 1/16"-1/8" of the surface.

A watertight concrete design must be specified to avoid leakage from containment facilities and sumps. Watertight concrete depends on nonporous aggregate being surrounded by high quality watertight portland cement paste. High quality cement paste requires the right amount and ratio of cement and water and proper moist curing for seven to 28 days. High water content cements increase subsequent concrete shrinkage which leads to cracks in the concrete. Air entrainment improves watertightness by improving workability, reducing segregation and bleeding, and thereby increasing density. Total water needed for workability of air-entrained concrete is less, therefore a given cement content for a lower water-cement ratio improves watertightness. Proportion mixtures so concrete can be placed without aggregate segregation. Workability of a stiff watertight mixture requires vibration to consolidate the mass. During finishing, no excess bleed water should rise to the surface.

Concrete Specifications

To get the right quality concrete, the order given to the ready mixed concrete supplier must be clear and contain all the following information: strength, minimum cement content, maximum size of coarse aggregate, slump and amount of entrained air. Below are specifications for concrete mixtures for watertight construction and good surface durability:

- Type I or Type II cement with air entrainment (Type IA or IIA) at 4,000-4,500 psi compressive strength. Type II provides moderate sulfate resistance.
- Water-cement ratio of 0.40-0.45 for a stiff (1.5"-3" slump), relatively dry mix for maximum strength, pesticide and fertilizer resistance, freeze/thaw resistance and watertightness.
- 5%-7.5% air-entrainment in cement to improve workability at placement, and improve watertightness and strength of low slump concrete.
- Use concrete super plasticizer admixture for easier workability at placement and improved watertightness and strength of low slump concrete.

- Vibration during placement at 5,000-15,000 rpm frequency range for minimum aggregate segregation.
- Allow no more than 30 min between concrete truck loads during placement.
- Mix 70-100 revolutions at **mixing speed**, then an additional 200-230 revolutions (maximum of 300 total revolutions) at **agitating speed**.
- Discharge load within 1.5 hr, see *Specifications for Ready-mixed Concrete ASTM C94-86*, Appendix A.
- Minimize discharge drop distance by using a discharge chute.
- Use large (1"-1.5"), clean, impervious aggregate.
- Use clean, drinkable mixing water at a pH=5.0-7.0.
- Oven test aggregate for excess moisture and adjust water added accordingly. If oven testing is not possible, reduce total added water assuming 3.5% excess water in sand and 1.5% excess in aggregate.
- Continuous pour in one day—no cold joints.
- Use a float finish on the surface with an aluminum or magnesium float to minimize coarse surface texture to improve washing and cleanup. Concrete surfaces to be coated with a sealant may need added grit for a rougher texture to improve sealant adhesion and worker safety.
- Immersion or moist cure for at least seven days (28 day immersion or moist cure preferred for maximum strength).
- Allow several weeks for green concrete to cure before applying sealants to minimize trapped moisture bubbles in sealant coating.

Minimum Cement Content

Floor work, in particular, needs sufficient cement mortar matrix for proper finishability. Finishability is assured by specifying a minimum cement content. With modern concrete technology, high-strength concrete can be obtained with less cement than before. Where strength alone is the decisive criteria, less cement means greater economy. Surface durability, however, depends upon the surface hardness of the concrete as well as its internal strength and requires more cement. Specify a minimum cement content that ensures finishability for maximum surface durability as well as adequate internal strength, Table 20. Use the largest size of aggregate possible to keep the cement content to a minimum.

Maximum Size Coarse Aggregate

Random cracking must be avoided in concrete containment facilities. Reduce random shrinkage cracking by using concrete with a minimum shrinkage potential that contains the correct gradation of aggregates, the maximum size of coarse aggregate, and the maximum amount of coarse aggregate consistent with placing and finishing methods. A larger aggregate size permits a lower water content in the concrete and is more effective in restraining the shrinkage of the cement paste.

Use the maximum aggregate size, Table 20, if it is economically available and if it satisfies the requirement that maximum aggregate size not exceed 3/4 the clear space between reinforcing bars or 1/8 the depth of the floor slab.

Table 20. Minimum cement and air entrainment requirements for watertight concrete.

With aggregates well graded up to the maximum practical size, less cement and air entraining are needed, so the mix is more economical.

Maximum size of aggregate, in.	Cement lb/yd^3	Average air entrainment, %
1.5	470	5
1	520	6
3/4	540	6
1/2	590	7
3/8	610	7.5

Slump

Excessive slump and consequent bleeding and aggregate segregation are primary causes of poor performance in concrete slabs. If the finished slab is to be level, uniform in appearance and durable, it is important that all batches placed have nearly the same slump. Low-slump concrete speeds placement and consolidation, reduces finishing time, reduces cracking and eliminates surface defects. Placing low-slump (1.5"-3") concrete flatwork is routine with the use of mechanical equipment such as a vibratory screed that rides on the side forms. When such equipment is used on slab work, add no water at the job site.

Entrained Air

A small amount of purposely entrained air is useful in all concrete for reducing bleeding and increasing plasticity. Concrete that will be exposed to cycles of freezing and thawing, and pesticides and fertilizers needs a total air content of 5.0%-7.5%, depending upon maximum size of aggregate, to ensure resistance to scaling, Table 20. Where concrete is exposed to fertilizers, use higher air-entrainment levels.

Admixtures

Super plasticizer admixtures are needed to improve plasticity for easy placement of dry, stiff concrete mixes, even with air entrainment. Super plasticizers temporarily improve plasticity and flowability for about 45-75 min depending on the specific additive and temperature. Thus, difficult-to-place mixes can be placed using minimum vibration with little aggregrate segregation and no significant voids or bleeding. Strength and water tightness are improved due to elimination of voids.

Some concrete plants add admixtures as the truck departs the plant so it mixes on the way to the job site. Other plants have the truck operator add the admixture when he arrives at the construction site to

fully utilize the available plastic time limit. A minimum of 25-30 revolutions of the mixer at mixing speed is needed to assure uniform distribution of the admixture. Once the time of plasticity passes, the concrete becomes stiff again and begins hardening.

Chemical Resistance and Durability

Concrete for pesticide and fertilizer facilities lasts longer if a moderate sulfate resistance cement is used to reduce attack by sulfates and other chemicals. Type II portland cement with 5.0%-7.5% air-entrainment added, or Type IIA (air-entrainment incorporated by the manufacturer) portland cement is suitable to resist 150-1,500 ppm sulfate. Type V, a high sulfate resistance cement is ideally suited to resist severe sulfate exposures of 1,500-10,000 ppm, but is generally not available and costs more. Type II portland cement may not be available in many areas. Type I or IA cement can be used if protected from chemical attack by suitable protective surface treatment coatings. See Chapter 12, Maintenance of Facilities, and refer to *Effects of Substances on Concrete and Guide to Protective Treatments*, Appendix A. Use sealer materials that remain flexible after curing, aging and cold weather, such as flexible epoxies, silicones, polyurethanes, polyureas and Hypalon, to keep temperature stress and control joint cracks sealed. Check surface coating material specifications, application procedures and resistance to the pesticides and fertilizers to be encountered before selecting the coating.

Curing Concrete

Proper treatment of concrete after it has been surface finished is essential. Concrete must be kept moist so the cement will continue to combine chemically with the water. Start this curing process as soon as possible. If it is delayed and rapid evaporation takes place in the early stages, the surface may crack, craze or dust. The longer the concrete can be kept wet, the stronger, more impervious and more wear-resistant it becomes. Exposed slabs are especially sensitive, as the surface strength development can be reduced significantly by improper curing.

Chemical hydration occurs when portland cement and water are mixed, causing moisture evaporation due to heating. Chemical hydration influences concrete strength, durability and density. Two factors that must be controlled during curing are evaporation rate and temperature. If evaporative cooling of the concrete is properly controlled during mild or hot weather, the concrete surface temperature remains at a satisfactory level.

Curing determines the ultimate concrete durability, strength, watertightness, abrasion resistance, volume stability and resistance to freezing, thawing, pesticides and fertilizers. Moist curing requires maintaining satisfactory surface moisture content and temperature. For ideal concrete curing, fill containment and pad volumes with water and moist cure at 60 F-70 F for at least seven days to develop 95% of 28 day strength. Concrete will continue to gain strength as long as it is moist cured. For example, concrete moist cured for 180 days will develop about 130% of the 28 day strength.

Recommended concrete moist curing processes include:

- Ponding or immersion, fogging or spraying, or periodic spraying to saturate a covering provides evaporative cooling for hot weather curing.
- Sealing exposed concrete surfaces with polyethylene film, impervious paper or membrane-forming curing compounds as soon as concrete surfaces are finished.
- Supplying additional moisture and heat with accelerated strength-gain curing methods, such as live steam and heating pads for cold weather curing.

The first curing method is preferred for hot weather placement, while the last is best during cold weather. The second curing method is an acceptable alternative to the first curing method in mild climates. Use insulated blankets, or straw or hay coverings when curing concrete below 32 F.

Cracks in Concrete

Cracks rarely affect the structural integrity or the durability of concrete significantly, but they may allow leakage and they look bad. Most cracks in concrete result from volumetric change due to drying shrinkage, direct stress due to applied loads, or flexural stress due to bending, frost heaving and/or subgrade settlement. Cracks appear where the tension stress within the concrete exceeds the tensile strength of the concrete to hold itself together.

Drying shrinkage is an unavoidable, inherent property of concrete, so the possibility of cracking exists. The magnitude of drying shrinkage is affected by the water content of the mix. More coarse aggregate and less water mean less shrinkage (thus, less cracking) in the concrete. Type of cement and cement content have little effect on drying shrinkage. Avoid curing accelerator admixtures containing calcium chloride; they increase drying shrinkage significantly. Factors that affect the amount of cracking are:

- **Water:** The amount of water per bag of cement or per cubic yard of concrete is an important factor. The more water, the greater the cracking tendency. Water increases shrinkage and reduces strength. Use the lowest practical water:cement ratio (0.4-0.45, e.g. 188-212 lb water for 470 lb cement) and aim for a slump of 1.5"-3".
- **Aggregate:** The smaller the maximum size of well-graded aggregate, the greater the shrinkage of concrete at the same strength. Use a graded aggregate with maximum size of 1.5". Small amounts of certain clays in aggregates cause high shrinkage and cracking, because clay shrinks more than cement paste.

- **Bleeding:** The upward flow of water in fresh concrete causes pockets of watery paste under the larger pieces of aggregate, especially in deeper sections, which leads to internal voids or cracks and reduced water tightness and concrete strength.
- **Placing:** The rate and conditions of placing affect cracking through bleeding and aggregate segregation in forms or around reinforcement. Let the concrete settle. Use vibration to aid concrete consolidation and settling, but avoid excessive vibration which causes aggregate separation.
- **Curing:** Moisture conditions during early and subsequent curing are very important. To prevent excessive drying, dampen the subgrade, subbase, forms and aggregates; start moist curing immediately using temporary covering or fog spray between placing and finishing and/or use sunshades to reduce evaporation rate.

Jointing Practice

Good jointing practice is one way to minimize floor cracks. Proper jointing induces concrete to crack in predictable, straight lines, Fig 55. Cracks are controlled when proper jointing of slabs and walls forces cracks to occur in specific locations. Joints can be formed by tooling during the placing of the concrete or sawed into the concrete after it has cured. The joint becomes a weak section of concrete and when settlement or temperature change causes stresses in the concrete, the weak section breaks. It is much easier to caulk or seal a straight wide joint (1/8"-1/4") than a random crack that may develop in unjointed concrete. Joints are usually much larger than cracks and will hold grouts and sealers much better. Joint or cut 1/4 of the way through the slab. The line of weakness will concentrate cracking, but still transfer loads between slab sections through the interlocking aggregates and continuous reinforcement below the cut. Locate floor and wall control joints in line with each other. Fill the control joints with a sealant to prevent leakage, Figs 56, 57 and 61. Elastomeric sealers are necessary to allow the material to bridge the joint and to adhere to the concrete providing a watertight seal.

Flexible waterstops are also used in control and construction joints to prevent water leakage. A waterstop is a long thin flexible barrier against water leakage which spans across a floor joint, Fig 58, wall joint, Fig 62, or wall-to-floor junction, Figs 63 and 64. Materials chosen must be resistant to the pesticides and fertilizers to be encountered. Shapes are dumbbell with center bulb; ribbed with center bulb and split ribbed. The center bulb must be positioned at the joint.

The formwork around waterstops must be tight fitting so a leakage path for the cement mortar does not exist. Concrete must be carefully placed and consolidated to avoid shifting of the waterstop. Position waterstops correctly, locate accurately and consider bracing or lashing firmly to prevent movement during placing of the concrete. See *Concrete Construction Annual Reference Guide*, Appendix A.

Make control joints no more than 30′ o.c. in both directions in concrete floor slabs used for loadout or small to medium sized containment pads with steel reinforcing bars. Interrupt the reinforcing steel at control joints, and place 30" long #4 reinforcing bar dowels through the joint every 30" along the joint. Locate control joints in accessible areas, e.g. not under a tank, so the crack can be monitored and sealant can be easily applied, repaired or replaced, Fig 55.

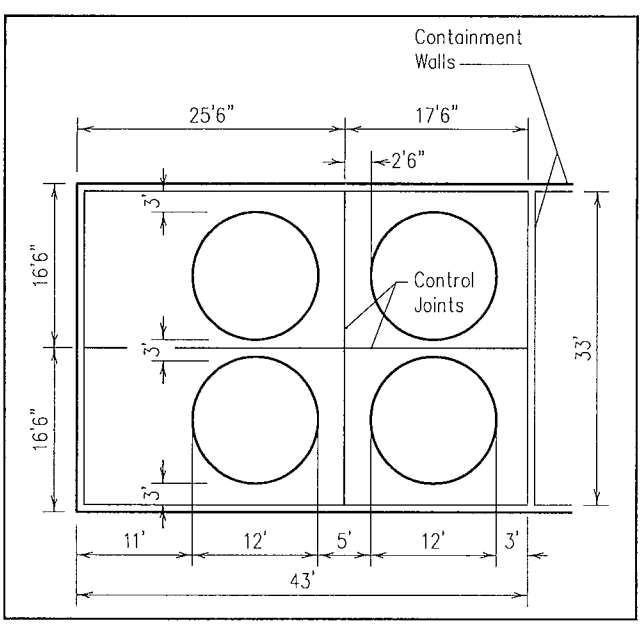

Fig 55. Typical control joint locations.
Locate control joints no more than 30′ apart for steel reinforced concrete slabs and do not place them under tanks.

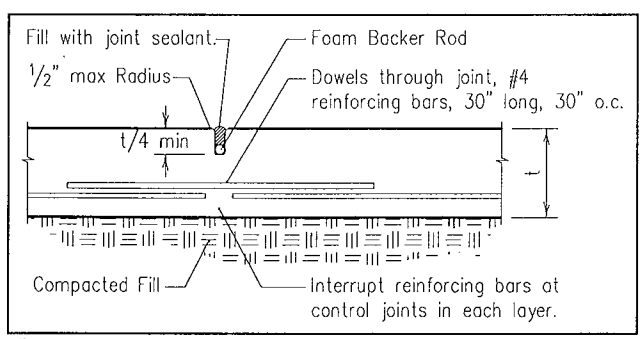

Fig 56. Hand tooled floor control joint.

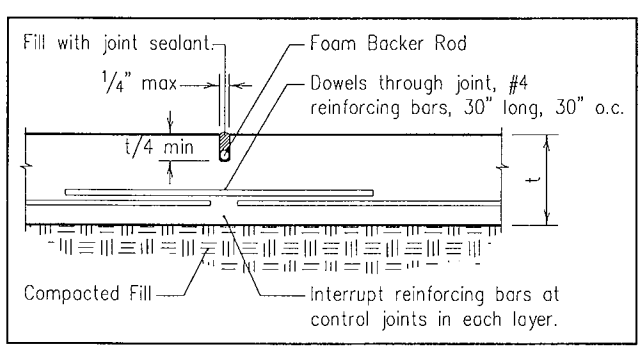

Fig 57. Sawn floor control joint.

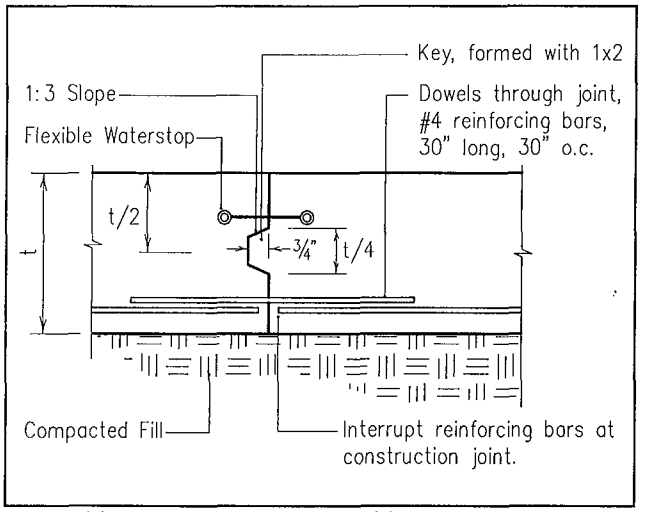

Fig 58. Floor construction joint with waterstop.

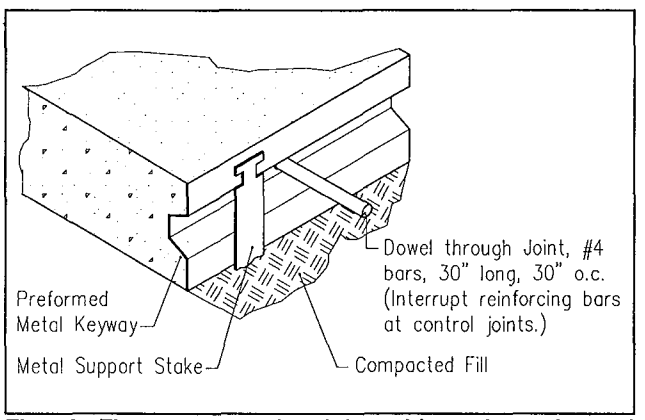

Fig 59. Floor construction joint with preformed metal keyway.

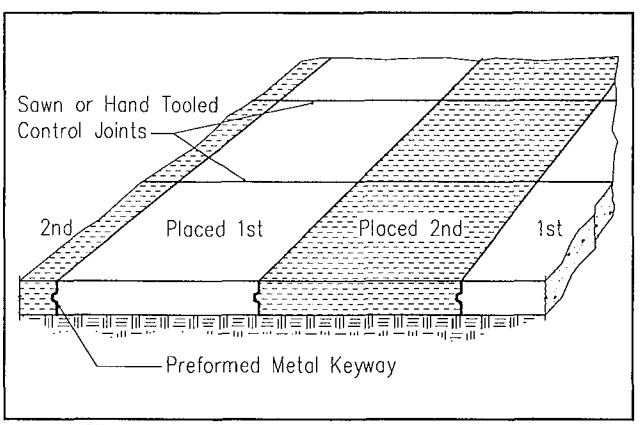

Fig 60. Floor construction joints.
See *Farm and Home Concrete Handbook, MWPS-35*, Appendix A.

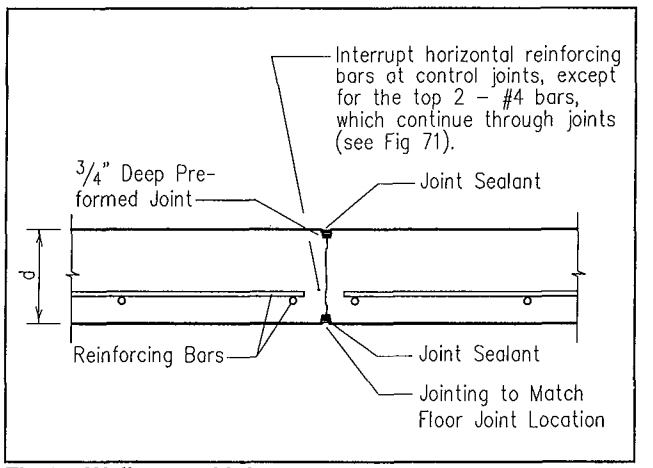

Fig 61. Wall control joint.

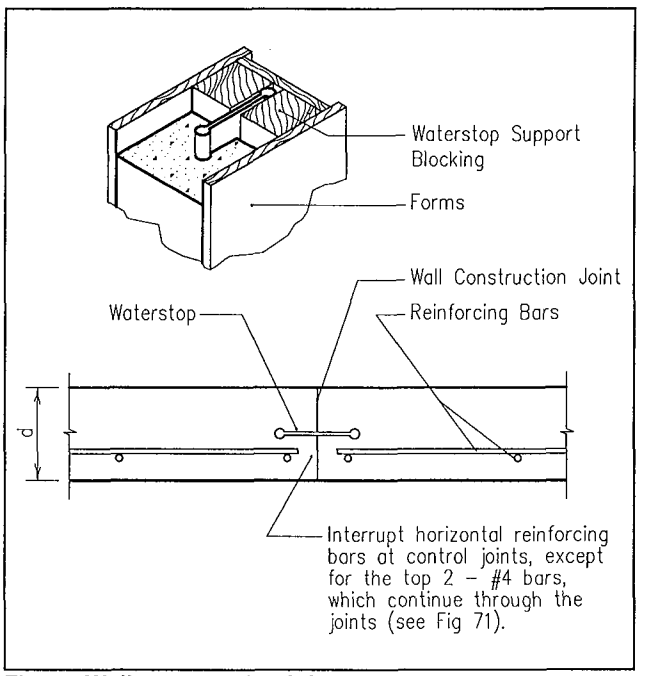

Fig 62. Wall construction joint.

Concrete Structural Design

Design all concrete facilities with two criteria in mind:

- Design walls and floors to resist the maximum potential tank, hydrostatic and wheel loads that they may be subjected to. Many fertilizers are heavier than water and hydrostatic design loads range from to 70-100 lb/ft^3-ft of depth; check with the manufacturer for the density of specific fertilizers or design for the highest density.

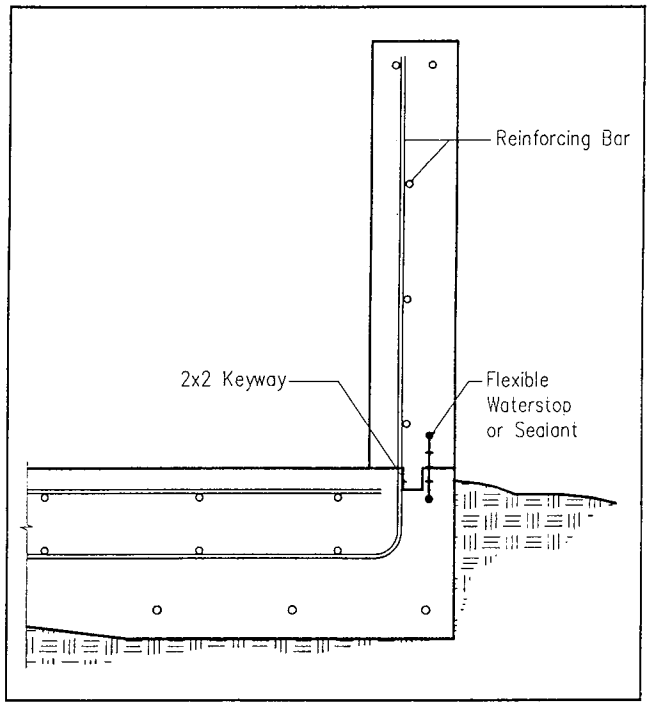

Fig 63. Exterior wall-to-floor connection with waterstop.

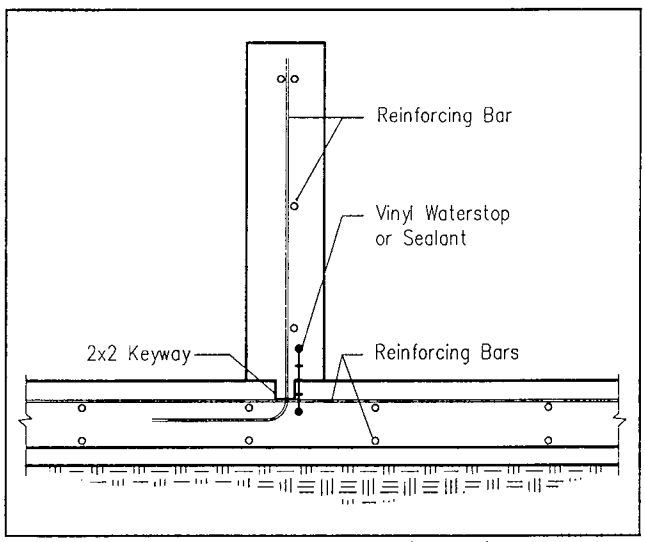

Fig 64. Interior wall-to-floor connection with waterstop.

- Design walls and floors to resist cracking. This criterion often requires more reinforcing steel than the structural loads criterion.

Use high quality concrete (at least 4,000 psi) and steel (60 grade) for all structural reinforcement. Use reinforcing bars because wire mesh is difficult to place accurately. Plastic fiber additives with reinforcing bars can minimize concrete cracks throughout the life of the facility, but should not be a substitute for the required steel reinforcement bars.

Secondary Containment Floors and Walls

Use Table 21 for designing the floors of secondary containment facilities. Two layers of steel bar reinforcement are needed for secondary containment floors because tank loads induce both positive and negative bending moments in the floor.

Fig 66 gives concrete wall corner reinforcement details. Figs 67-70 give concrete curb designs. Figs 71-73 give concrete wall designs for walls with floating slabs. Figs 74-76 give concrete wall designs for walls with formed footings.

Table 21. Secondary containment floor design.

Do not place secondary containment facilities over peat or soils with high organic content. The designs in this table are for poor soils (k=100 pci subgrade strength) and will be conservative in some areas. Use 60,000 psi steel and 4,000 psi concrete. Use two layers of steel bar reinforcement as shown in Fig 65.

Maximum tank height, ft	Concrete thickness[a], in.	Reinforcing bars and spacing[b]	Area of steel[c] (A_s), in^2
10	8	#4, two layers, 12" o.c.	0.18
15	10	#5, two layers, 12" o.c.	0.34
20	12	#6, two layers, 12" o.c.	0.47
25	14	#7, two layers, 12" o.c.	0.62
30	14	#8, two layers, 12" o.c.	0.75

[a]Concrete thickness (t) in Fig 65.
[b]Install reinforcing bars at this spacing in both directions.
[c]A_s is per foot of width in both directions.

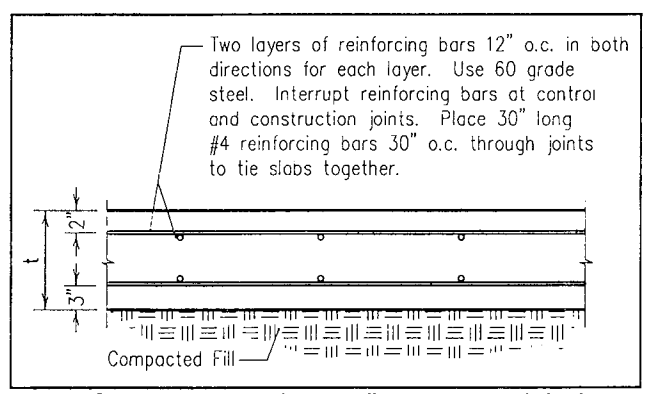

Fig 65. Secondary containment floor structural design.
See Table 21 for thickness and steel reinforcement requirements.

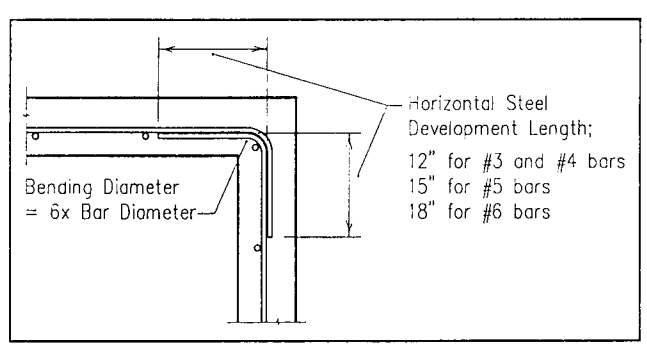

Fig 66. Wall corner reinforcement detail.

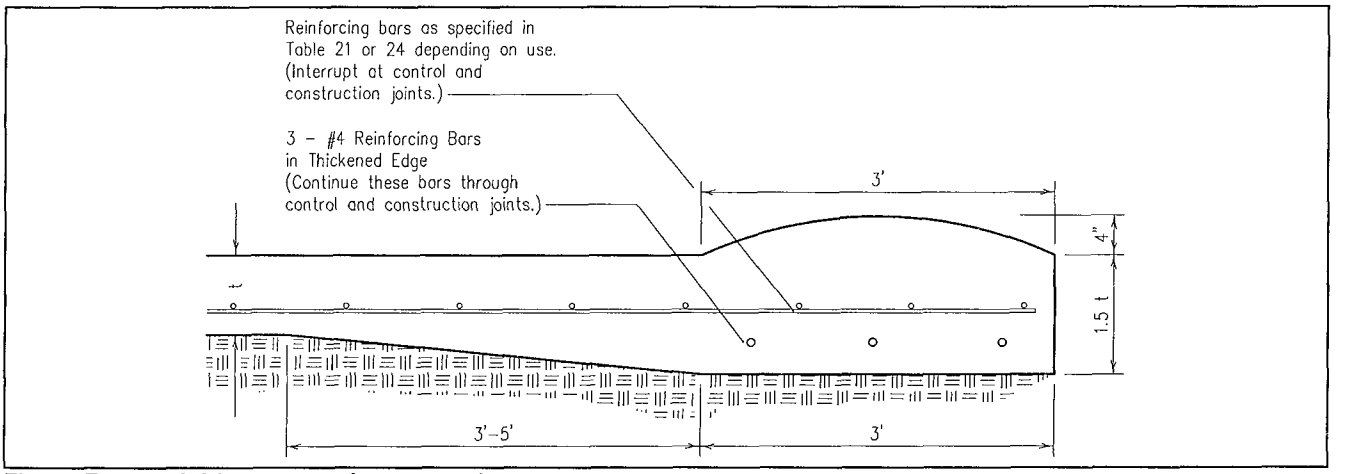

Fig 67. Rounded drive-over curb construction.

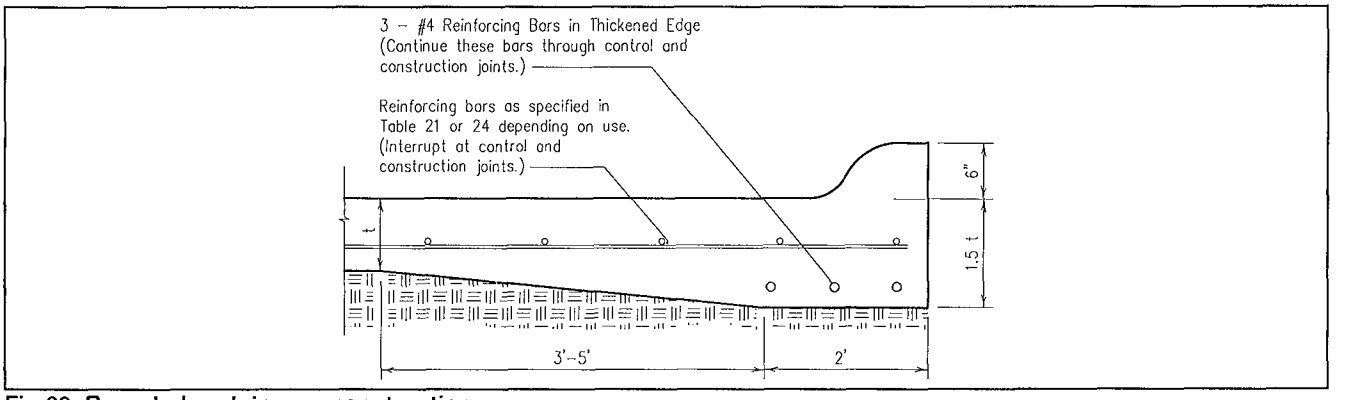

Fig 68. Rounded curb in new construction.

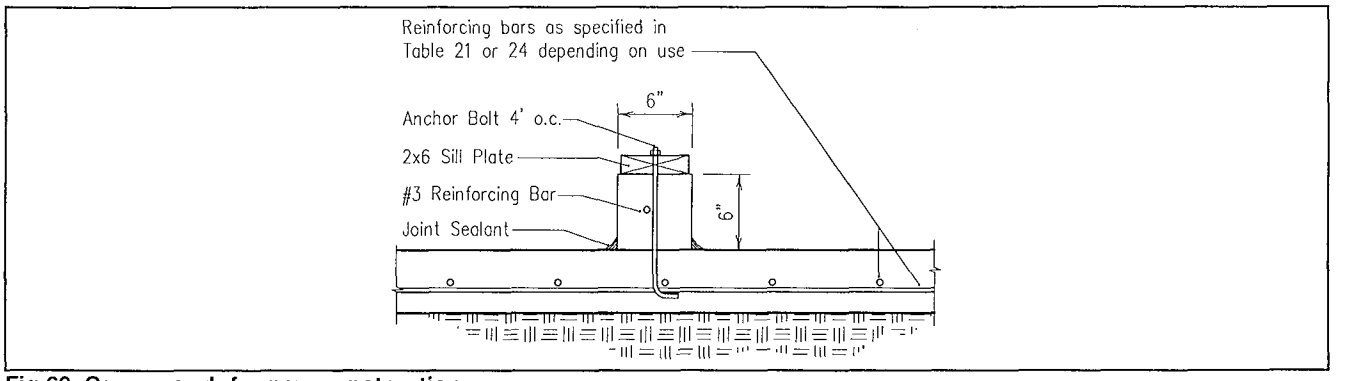

Fig 69. Square curb for new construction.

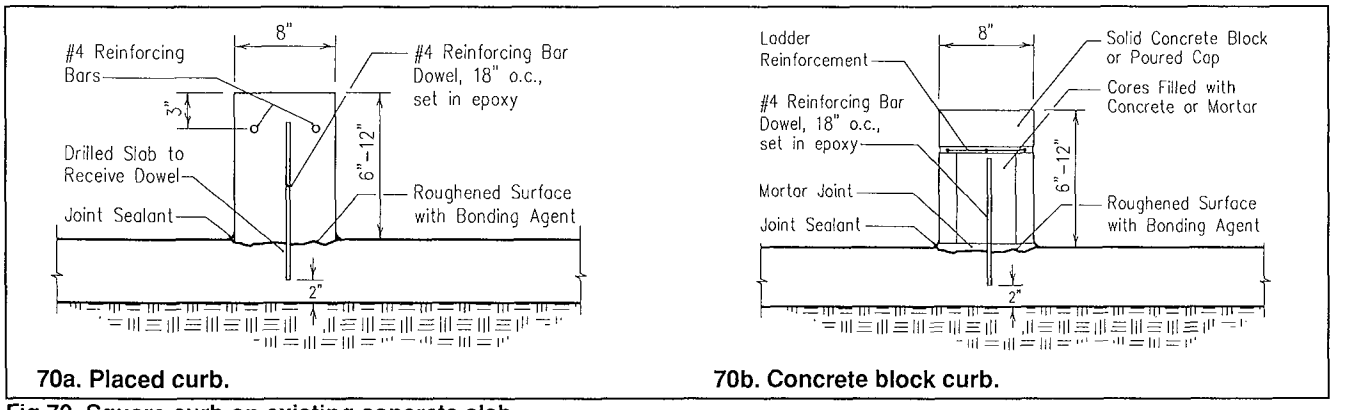

70a. Placed curb. **70b. Concrete block curb.**

Fig 70. Square curb on existing concrete slab.

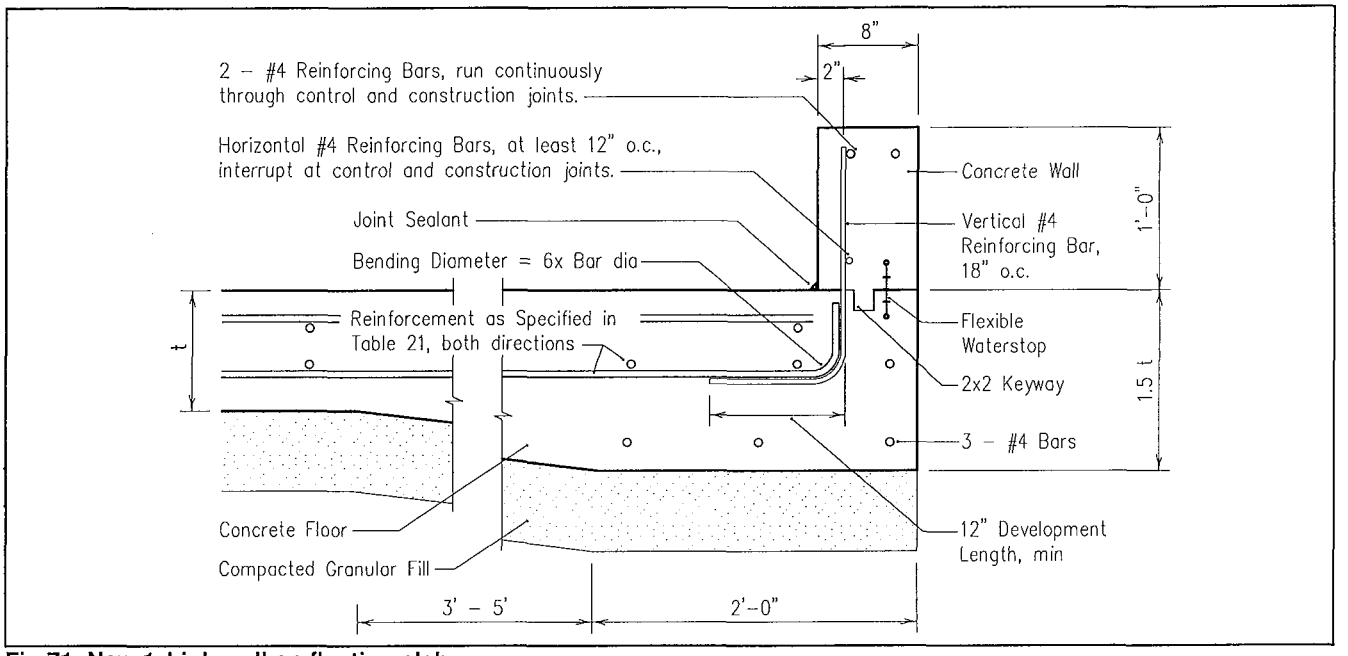

Fig 71. New 1′ high wall on floating slab.
Use 60 grade steel and 4,000 psi concrete. Floor thickness and steel reinforcement are as given in Table 21. Install a control joint in wall at each floor control joint, but no more than 30′ o.c.

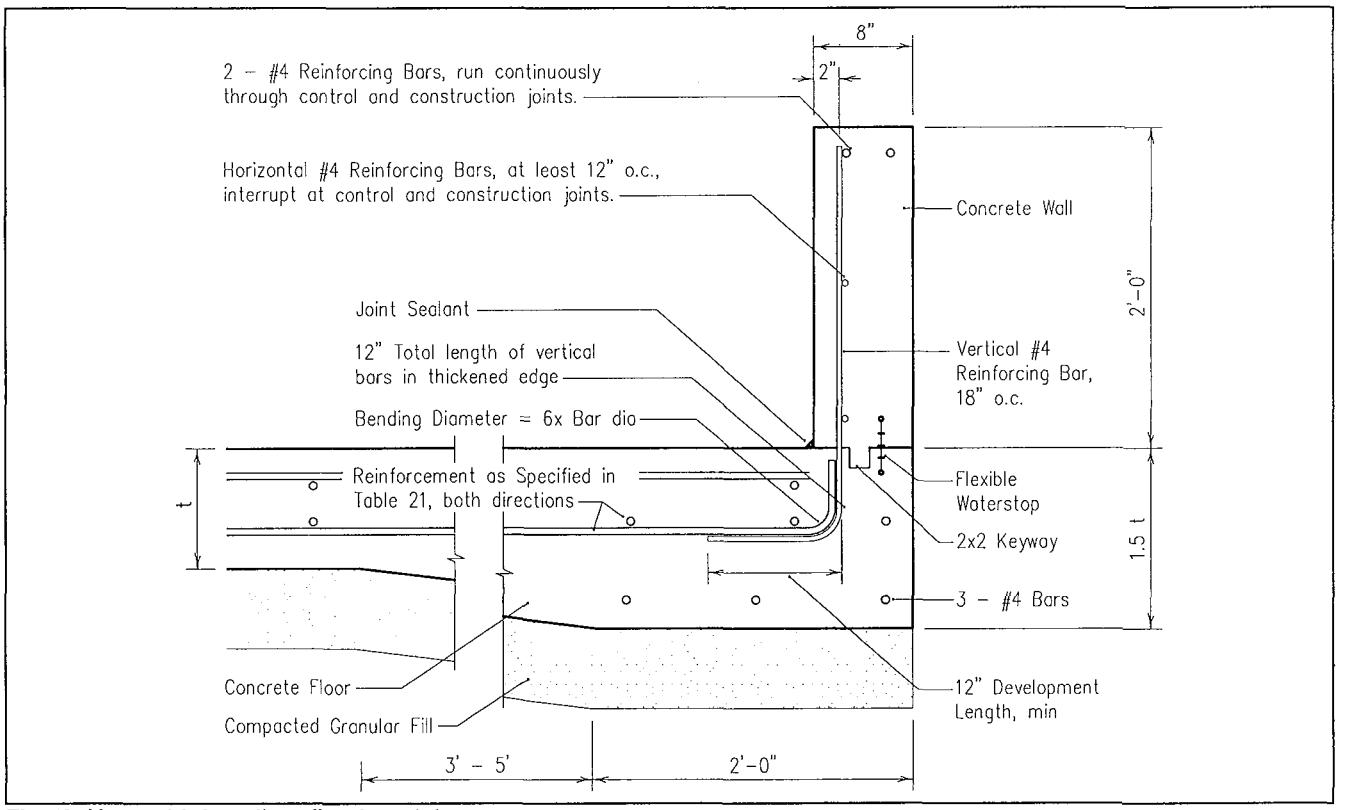

Fig 72. New 2′ high wall on floating slab.
Use 60 grade steel and 4,000 psi concrete. Floor thickness and steel reinforcement are as given in Table 21. Install a control joint in wall at each floor control joint, but no more than 30′ o.c.

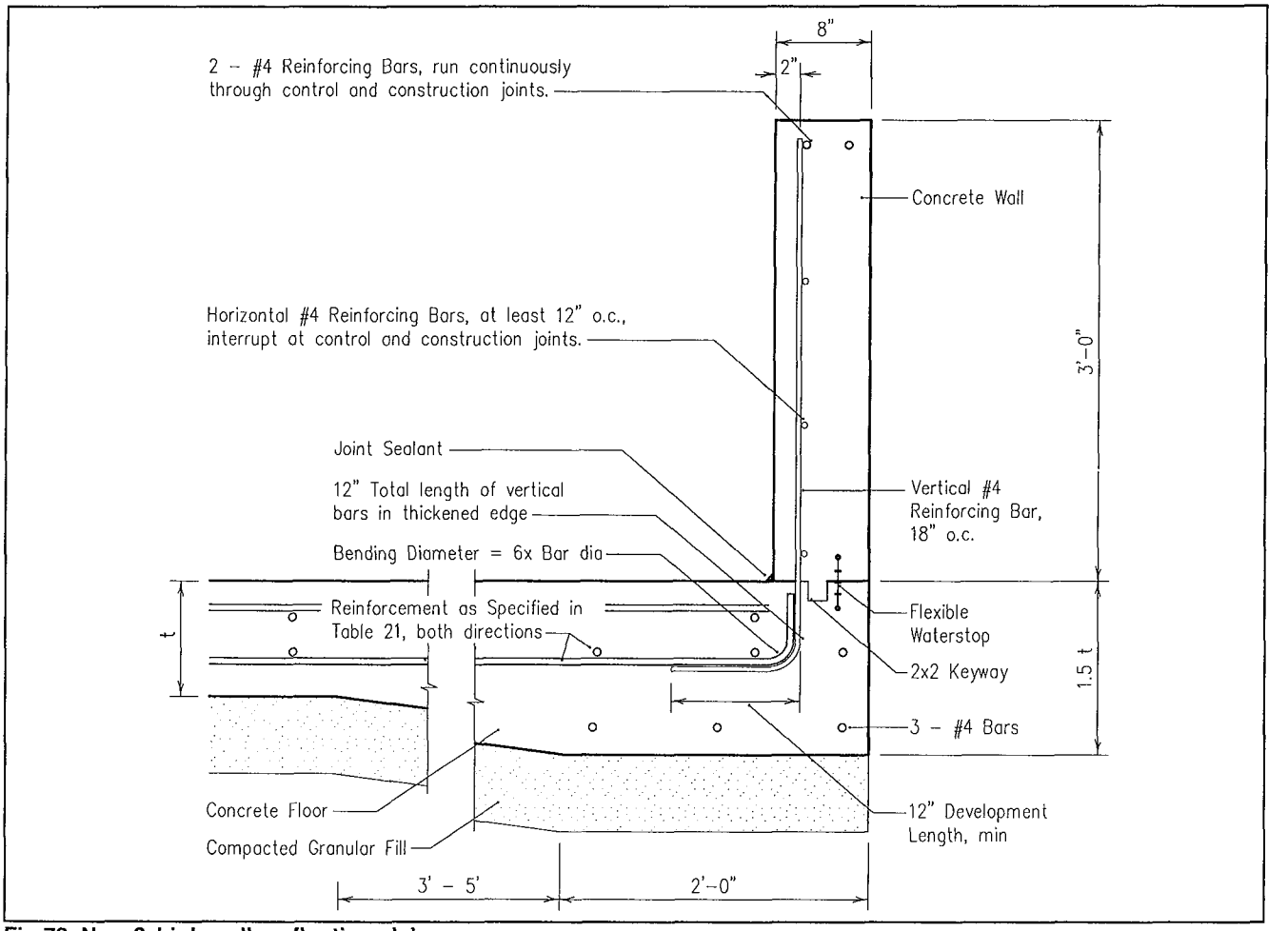

Fig 73. New 3′ high wall on floating slab.

Use 60 grade steel and 4,000 psi concrete. Floor thickness and steel reinforcement are as given in Table 21. Install a control joint in wall at each floor control joint, but no more than 30′ o.c.

Mixing/Loading Pad

Table 22 lists specifications for eight sizes of pads ranging from a 25′x25′ for farm operations to 60′x60′ pads for large farm systems or fertilizer dealerships. These specifications match dimensional letters on the concrete pad layout drawings in Figs 77 and 78. For large systems, this loading pad may be incorporated with adjacent secondary containment for large fertilizer or pesticide tanks. Fig 78 shows a cross-section of the pad through the sump.

Table 23 lists specifications that match dimensional letters on the concrete pad layout drawings in Figs 80, 81 and 82. Concrete pad structural design is given in Table 24 and Fig 79. Concrete mixing/loading pad thickness was determined based on estimated wheel and axle loadings, soil subgrade design factors and estimated traffic frequency.

Stem walls around the mixing/loading pad perimeter provide protection against concentrated wheel loads and deter rodent and soil erosion damage under the pad. Use flexible sealers such as epoxies, urethanes or PVCs on slab surfaces that may crack in critical areas, i.e. containment and sump areas.

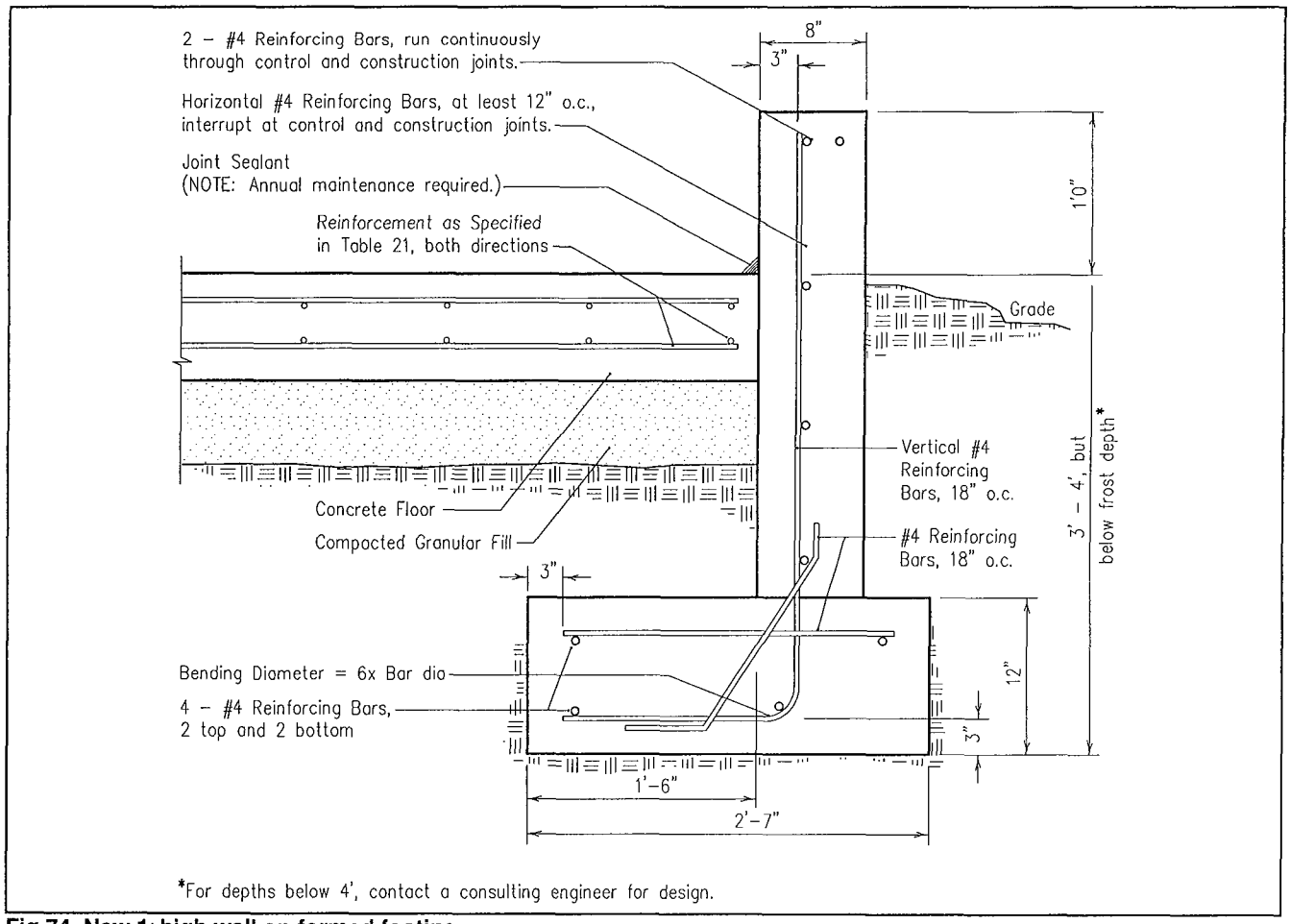

Fig 74. New 1′ high wall on formed footing.

Use 60 grade steel and 4,000 psi concrete. Floor thickness and steel reinforcement are as given in Table 21. Install a control joint in wall at each floor control joint, but no more than 30′ o.c. Nonuniform movement between floor and wall due to frost heaving could be a problem with this construction. Provide good drainage from the entire site.

Bulk Unloading Facility

Structurally, the bulk unloading facility should be 12′ wide by 50′-60′ long. Use a 6" concrete pad thickness with reinforced steel like the containment pad, with at least 2% slope to a shallow sump. A level curb along the outside edge provides the needed containment holding volume, in case of a valve leak or other structural failure of a full transport tank and plumbing. A 50′ pad sloped to a center drain (25′ slope each way) at 2% slope will be 6" deep at the centerline; a 60′ pad will be 7.2" deep. At 12′ width with full length level side curbs, the 50′ pad will contain 1,125 gal; the 60′ pad will hold 1,620 gal.

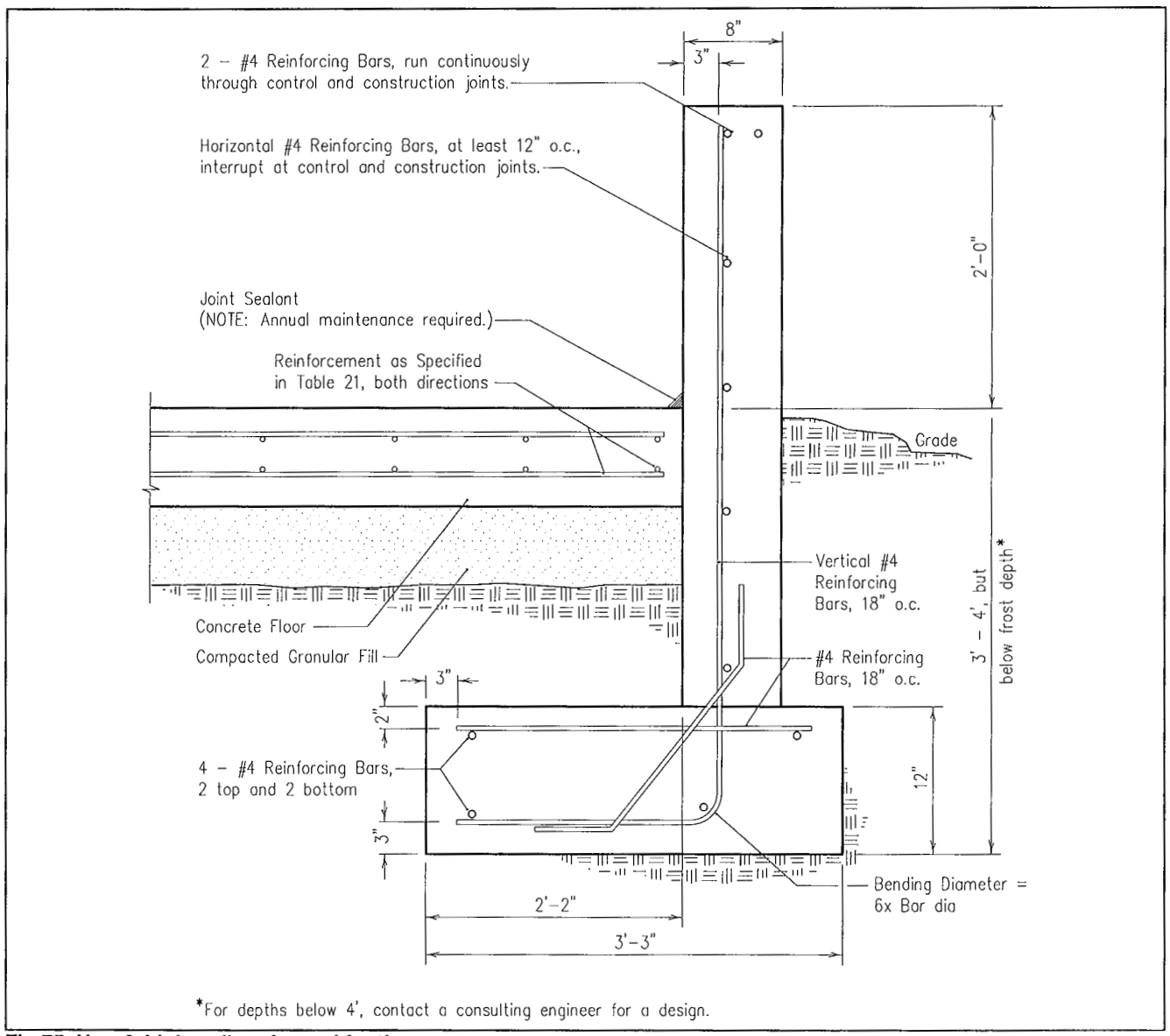

Fig 75. New 2′ high wall on formed footing.

Use 60 grade steel and 4,000 psi concrete. Floor thickness and steel reinforcement are as given in Table 21. Install a control joint in wall at each floor control joint, but no more than 30′ o.c. Nonuniform movement between floor and wall due to frost heaving could be a problem with this construction. Provide good drainage from the entire site.

Table 22. Single sump concrete pad dimensions and specifications.

[a]See Figs 77 and 78 for letter designation.

Dimension[a]	Pad size, ftxft 25x25	30x30	30x40	40x40	40x50	50x50	50x60	60x60
A, ft	25	30	30	40	40	50	50	60
B, ft	12.5	15	15	20	20	25	25	30
C, ft	25	30	40	40	50	50	60	60
D, ft	12.5	15	20	20	25	25	30	30
E	Concrete slab thickness, see Table 24							
F, in.	7	7	8	8	9	9	9	10
G[b], gal	1,239.49	2,023.12	3,098.11	4,368.30	6,010.21	7,710.28	9,388.19	12,173.66

[b]Mixing/Loading Pad Containment Volume; Sump volume included, 24" dia. ×18" dp = 4.71 ft^3 = 35.25 gal. Displacement volume of tanks and equipment must be subtracted to determine Net Usable Volume to meet EPA requirements.

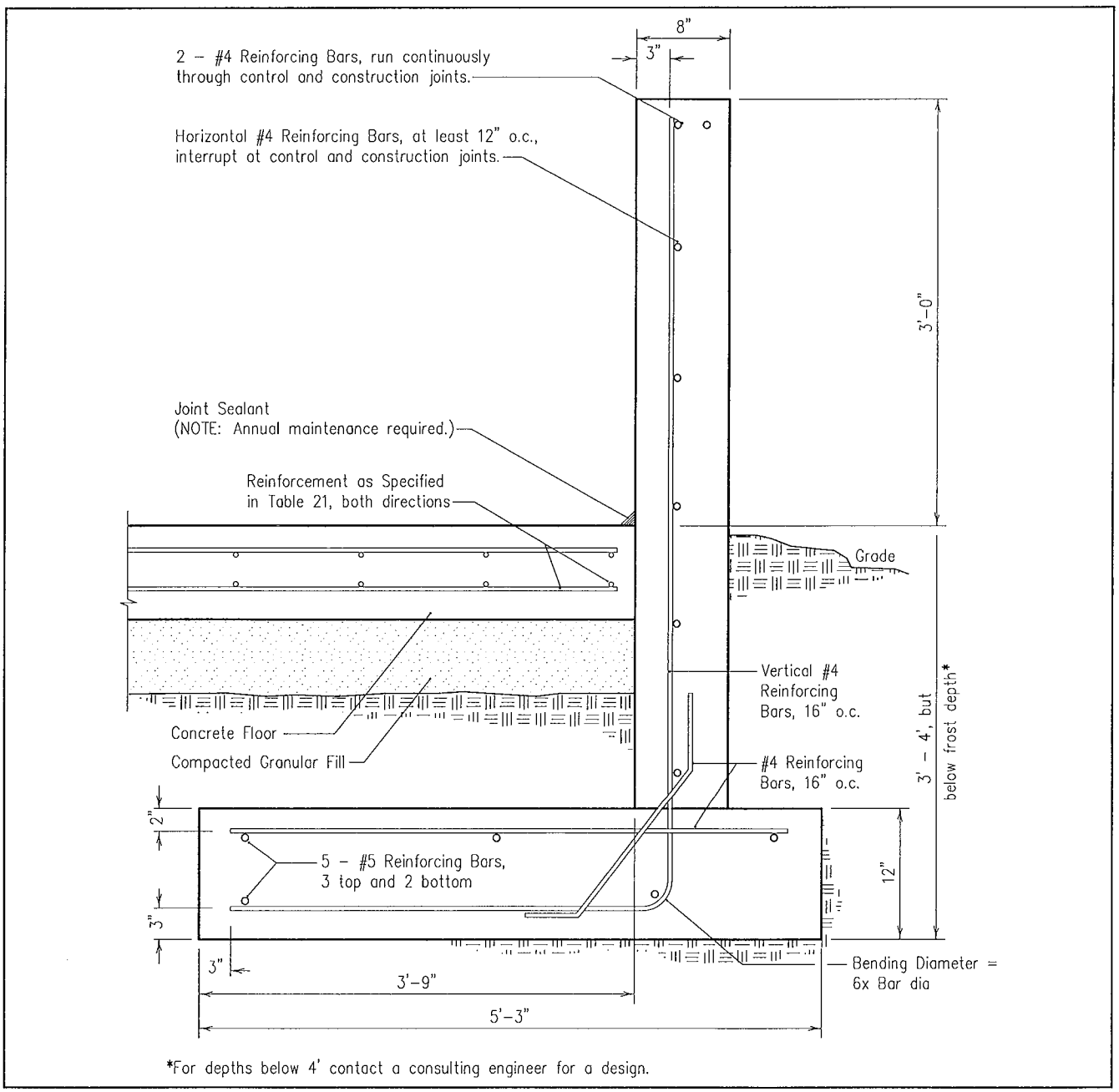

Fig 76. New 3' high wall on formed footing.

Use 60 grade steel and 4,000 psi concrete. Floor thickness and steel reinforcement are as given in Table 21. Install a control joint in wall at each floor control joint, but no more than 30′ o.c. Nonuniform movement between floor and wall due to frost heaving could be a problem with this construction. Provide good drainage from the entire site.

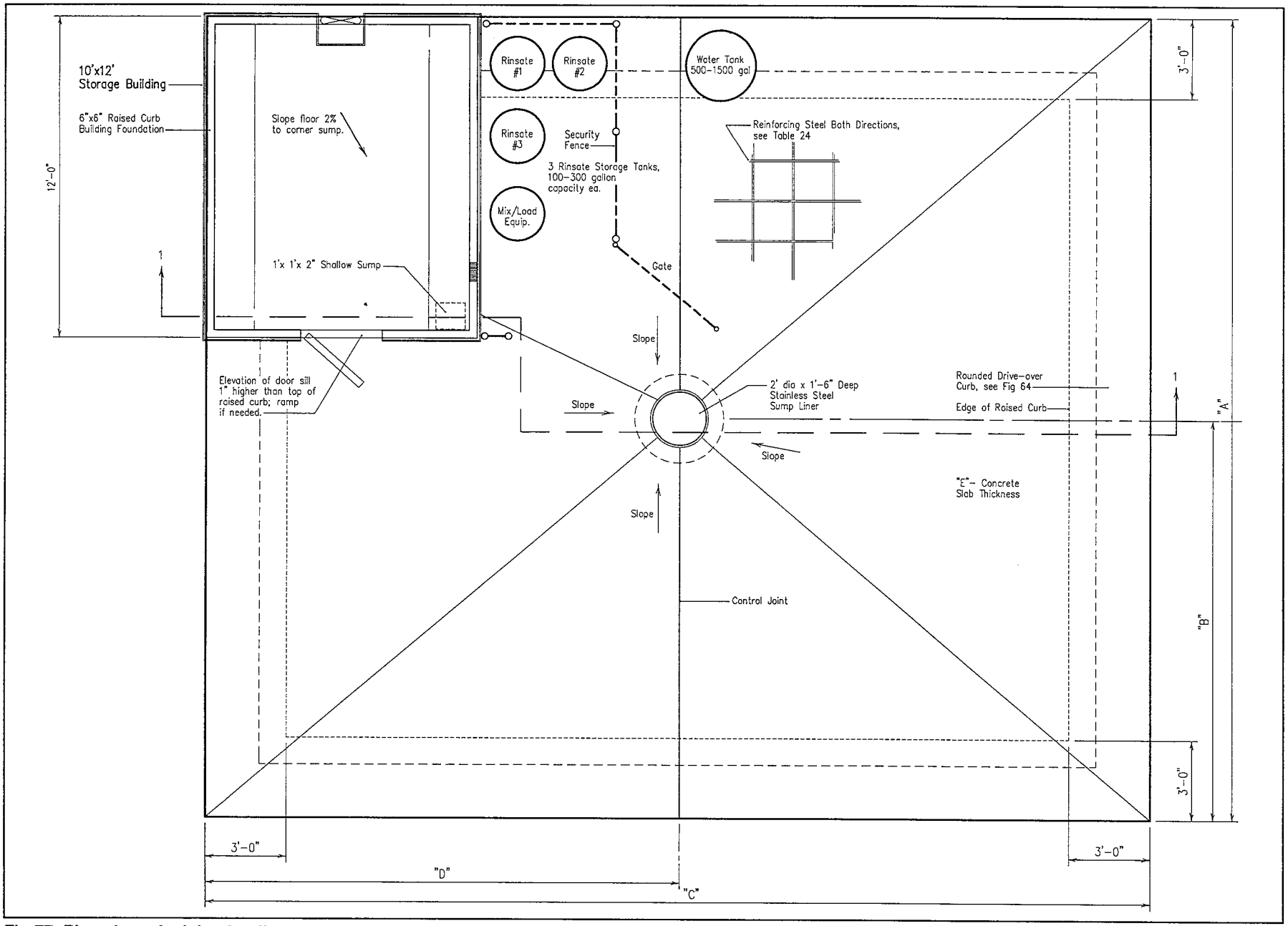

Fig 77. Plan view of mixing/loading pad.
See Table 22 for dimensions.

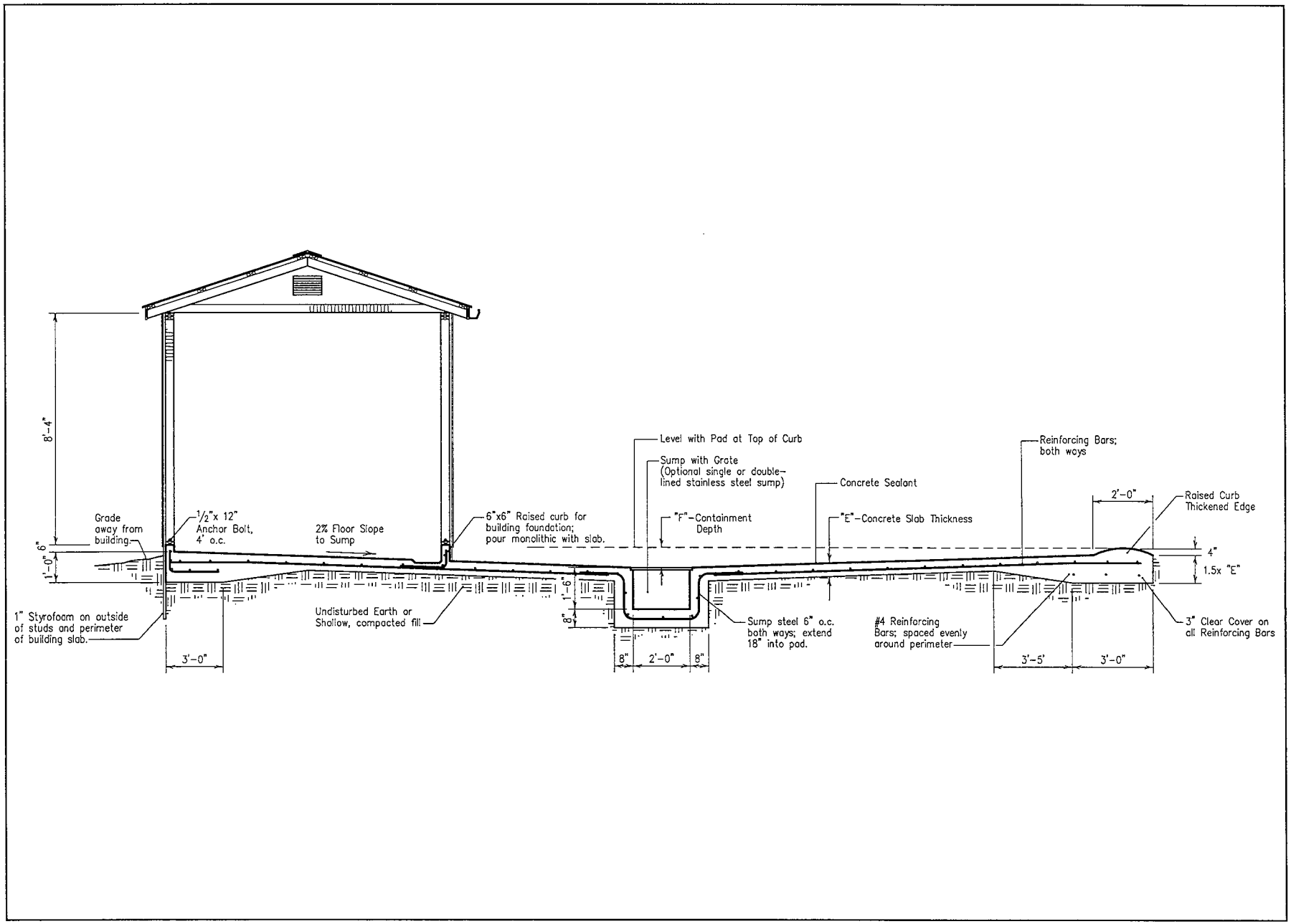

Fig 78. Mixing/loading pad cross-section.
See Table 22 for dimensions.

Table 23. Concrete pad dimensions and specifications.

Dimension[a]	Pad size, ftxft 20x30	30x45	40x60	50x70	60x85	70x95	80x110
A, ft	20	30	40	50	60	70	80
B, ft	10	15	20	20	25	25	30
C, ft	30	45	60	70	85	95	110
D, ft	20	30	40	50	60	70	80
E, ft	10	15	20	25	30	35	40
F, in.	14	17	18	18	18	21	24
G, in.	11.50	13	13	15	17	19	21
H, in.	14	17	18	21	24	27	30
I[b], in.	0	0	0	0	0	0	0
J, in.	8	11	12	15	18	21	24
K, in.	5.50	7	7	9	11	13	15
L, in.	8	11	12	15	18	21	24
M, in.	12	18	18	18	18	18	18
N, in.	18	30	30	30	30	30	30
P				See Table 24			
Q, %	3.5	3	2.5	2.5	2.5	2.5	2.5
R[c], %	2	2	2	2	2	2	2
S, ft	20	30	20	25	30	24	27
T1[d], gal	732.33	2,331.47	4,440.63	7,015.18	12,846.46	17,593.72	27,887.24
T2[e], gal	474.88	1,520.71	2,934.22	5,721.60	9,896.71	15,739.90	23,531.53

[a]See Figs 80, 81 and 82 for letter designation.
[b]"I" can be increased to provide increased containment volume; if "I" is changed, add the new "I" value to "G", "H", "J" and "K" dimensions.
[c]"R" is the slope of the pad in the rinsate and pesticide storage area.
[d]"T1" is the Pesticide and Rinsate Storage Containment Section Volume.
[e]"T2" is the Mixing/Loading Pad Containment Volume.
NOTE: For both T1 and T2, the sump volumes are included in all volumes (20'x30' pad sump = 18" dia. ×12" = 1.77 ft^3 = 13.22 gal). All other sumps = 30" dia. ×18" dp = 7.36 ft^3 = 55.08 gal. Displacement volume of tanks and equipment must be subtracted to determine Net Usable Volume to meet EPA requirements.

Table 24. Mixing/loading pad structural design.

Locate the reinforcing bars for these pads so there is 2" between the **top** surface of the pad to the top edge of the bars. Do not locate the bars below the midpoint of the slab, Fig 79. Interrupt reinforcing steel at control and construction joints and place 30" long, #4 reinforcing bars, at 30" o.c. along the joints to tie the slabs together. Use 60 grade steel for reinforcing bars and 4,000 psi concrete. Overlap bars at least 12" at splices. This table is based on *Design of Heavy Industrial Concrete Pavements*, see Appendix A. Table values are based on a maximum of 10,000 repetitions of loads and k=100 pci subgrade strength.

Single axle load, lb	Concrete slab thickness, in.[a]	Reinforcing bars and spacing[b]
Up to 20,000	6	#3 @ 10" o.c.
20,000 to 30,000	8	#4 @ 12" o.c.
30,000 to 40,000	10	#4 @ 10" o.c.

[a]Concrete slab thickness (t) in Fig 79.
[b]Install reinforcing bars at this spacing in **both** directions.

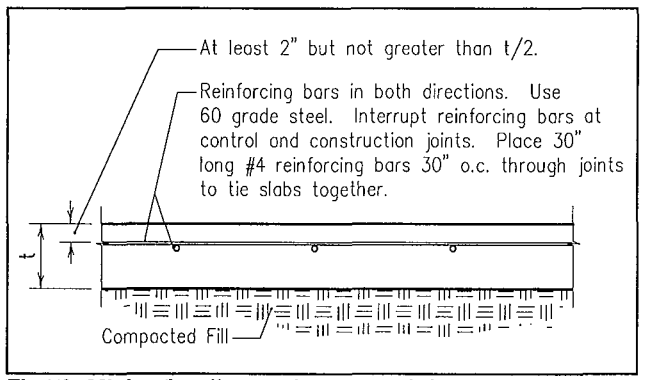

Fig 79. Mixing/loading pad structural design.
See Table 24 for thickness and steel reinforcement requirements.

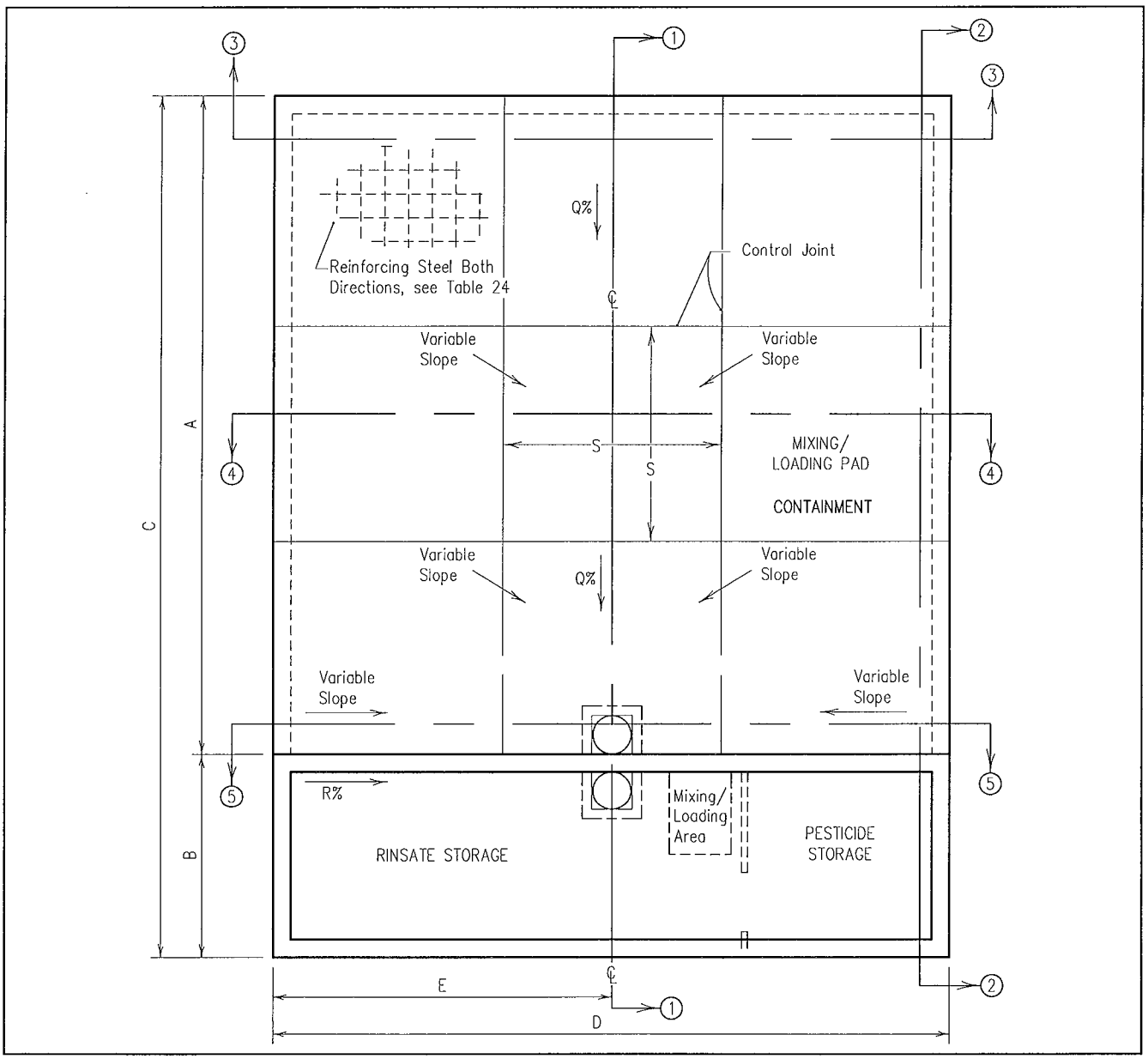

Fig 80. Plan view of concrete mixing/loading pad.
See Table 23 for dimensions. See Figs 81 and 82 for the section views.

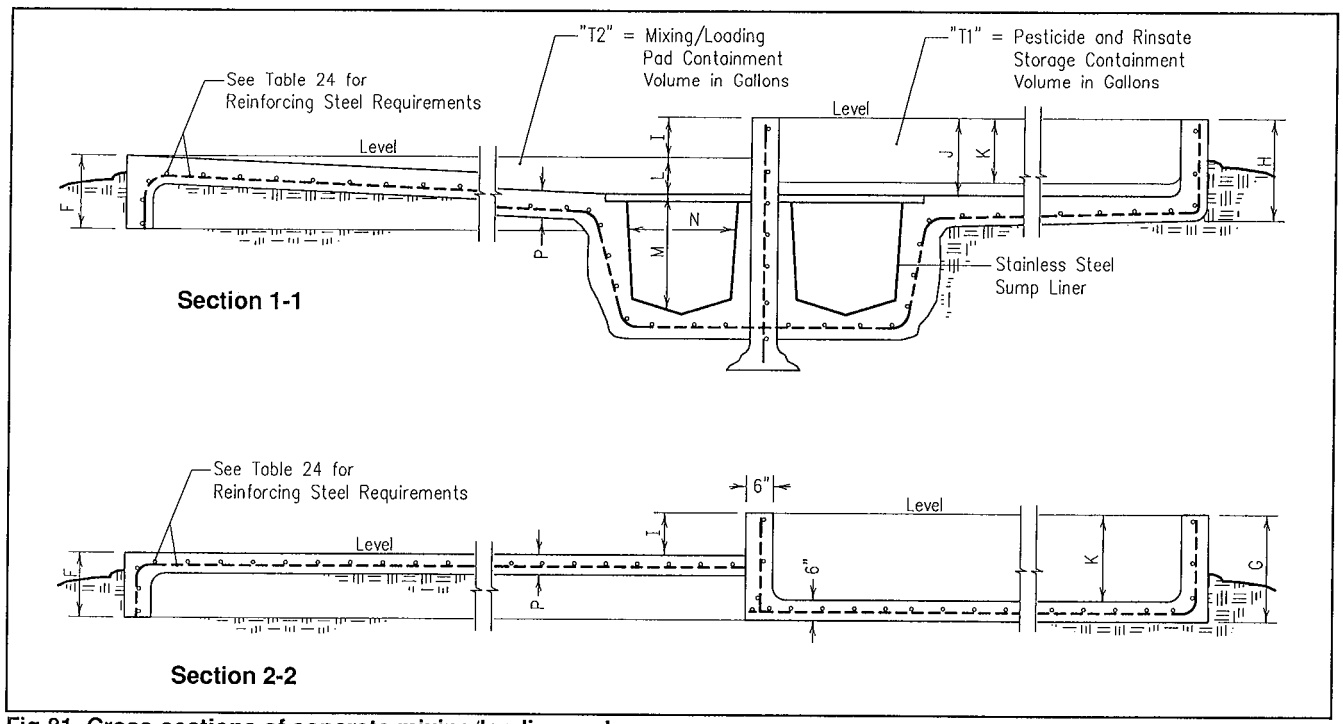

Fig 81. Cross-sections of concrete mixing/loading pad.
See Table 22 for dimensions. See Chapter 8 for sump design. See Fig 80 for section locations.

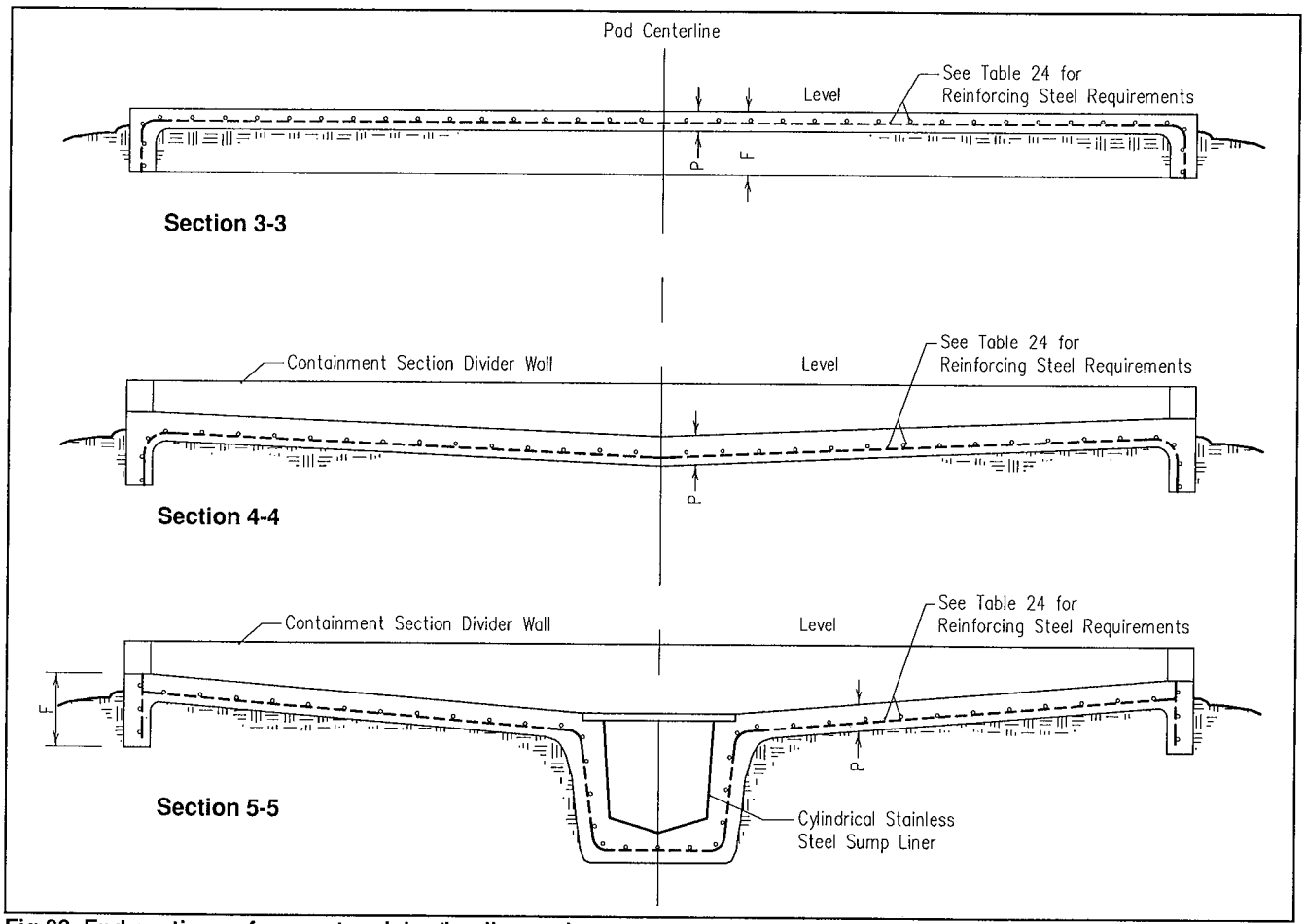

Fig 82. End-sections of concrete mixing/loading pad.
See Table 22 for dimensions. See Chapter 8 for sump design. See Fig 80 for section locations.

10. EMERGENCY RESPONSE PLANNING[10]

Even a facility that is well constructed, well operated and well maintained will have problems. Equipment fails, people make mistakes and spills or fires may occur. While the timing of these occurrences cannot be predicted, a well conceived response to an accident can keep a small problem from turning into a big one.

Laws

The need for an emergency response plan is required in part by the Emergency Planning and Community Right-to-Know Act, 1986. This act deals with four major points:

- Reporting of hazardous chemical inventories.
- Emergency notification of chemical accidents and releases.
- Reporting of toxic chemical releases.
- Emergency planning.

Federal, state and local governments all cooperate to develop emergency plans. The Local Emergency Planning Committee (LEPC) coordinates the gathering of emergency information and develops a local emergency plan which is sent to the State Emergency Response Commission (SERC). The state plans were to be in place by October 1988. Each plan must have the following information:

- Identification of the transportation routes and facilities where hazardous substances are transported, stored and used.
- Procedures for emergency response to accidental spills, including emergency response team notification and evacuation plans.
- Methods for determining the occurrence and severity of a spill and the areas and persons likely to be affected.
- Methods to notify the media.
- A listing of all emergency equipment available.
- Procedures and schedules for emergency response simulation exercises.
- A listing of the designated community coordinator and facility coordinators responsible for making sure the plan is activated and followed.

Reporting Requirements

An emergency response plan for facilities may be used in part by the LEPC to develop the state plan. Facilities that store or handle pesticides are required by SARA to develop an emergency response plan. Farms and facilities that store and use pesticides on the Superfund list or are listed as extremely hazardous substances in quantities over the reportable quantity (RQ) must be reported to the LEPC or appropriate agency.

All facilities storing or handling any listed extremely hazardous substance in excess of the "threshold planning quantity" (TPQ) must report this information under SARA Title III. The requirements of reporting and planning are too extensive to go into detail here. Consult the LEPC or county extension agent for more information regarding this law.

The Chemical Manufacturers Association's Community Awareness and Emergency Response program (CAER) is an excellent source of information on how to comply with SARA Title III, Appendix A.

Emergency Response Plan

An emergency response plan is a set of guidelines and information used by personnel at a facility to help make decisions during an emergency situation such as a fire or spill.

Develop an emergency response plan for every facility regardless of size. Having a plan helps assure that information is immediately available when an emergency (spill, fire) occurs and helps minimize human health risk and environmental contamination. The facility emergency response plan should include:

- Facility name, address and directions to site.
- Name, address and phone number of coordinator or manager and assistants.
- Facility site plan as described in Chapter 3, Site Selection.
- Inventory of all pesticides and fertilizers on site including location and quantity stored in all containers.
- Emergency phone numbers of:
  - Manager and/or coordinator
  - Assistant manager and/or coordinator
  - Physician(s)
  - Agencies
  - Emergency response team
  - Fire officials
  - Law enforcement officials
  - State Emergency Response Commission (SERC)
- Location and list of emergency equipment available on site or locally and PPE.
- Material Safety Data Sheets (MSDS) for pesticides and fertilizers stored at facility.
- Labels of all pesticides and fertilizers stored and manufacturers' emergency numbers.
- Reporting requirements for spills (state and federal).

---

10 David W. Kammel, Agricultural Engineering Department, University of Wisconsin Cooperative Extension, Madison.

- The procedure used to control and recover an accidental discharge for each facility.
- Procedures in using or disposing a recovered discharge.

Provide copies of the emergency response plan to:
- Facility.
- Home of coordinator.
- Local emergency planning committee.
- State emergency planning committee.
- Fire department.

Employee Training

Inform all employees of the location of the emergency plan so it can be found quickly if the coordinator is gone at the time of the emergency. Employee training programs should include how to use and implement the plan.

Pesticide Fires

Request the local fire official to visit commercial facilities on a semi-annual basis and review the emergency response plan.

Coordinate fire control and evacuation procedures with fire officials, insurance carrier and law enforcement offices. In the case of a fire at the facility use as little water as necessary to control the fire. Construct an impound area downslope from the storage site to contain the runoff water from fire fighting and to allow collection and disposal of contaminated water and soil. Contaminated water, rubble and soil may be considered hazardous waste and must be disposed in an appropriate manner.

Spill Reporting

In the event of a spill, it may be required to report the spill to the appropriate agency. Many states have spill laws that require reporting of spills. There are also federal reporting requirements such as the requirements for reporting spills of products on SARA Title III list of extremely hazardous substances that are over the RQ.

When you notify authorities of an emergency, have in mind your response and cleanup procedures. They will expect from you:
- Name and telephone number of the contact person at the dealership or facility where the spill occurred.
- Location of the spill and if water is threatened.
- Name or type of product spilled (e.g. Roundup or 28% liquid nitrogen).
- If the product is known to be acutely toxic.
- Estimated quantity spilled.
- Extent of injuries or exposure.
- Cause of the spill or fire.
- Action taken to control and contain the spill or fire.
- Planned cleanup procedures, evacuation and other precautions.
- When the spill occurred.
- Wind speed and direction.

Record Keeping

Records should be kept for several reasons. Most state bulk storage rules require that records be prepared and maintained regarding the operation of bulk storage facilities. Reporting requirements for both fertilizer and pesticide storage are generally the same. The following records are required:
- A record of all discharges at the storage facility, including type and volume of discharge, remedial actions taken and method of disposal. A discharge is a release of pesticides such as pump off of contaminated precipitation from a dike or an accidental spill on the mixing/loading pad.
- Liquid levels in each storage container.
- A semiannual inventory reconciliation.
- Inspection and maintenance records.
- For synthetic liners and prefabricated facilities, a written confirmation from the manufacturer stating the compatibility of the liner or facility material with the product stored.
- MSDS for all stored products.

Discharge records must be maintained at least five years. Manufacturers' compatibility statements and underground abandoned container records must be kept permanently. Other records must be kept for at least three years. Records must be made available for inspection by the state department of agriculture or responsible agency.

Another reason for keeping good records is for insurance and liability purposes. Insurance carriers may want records to confirm practices and show how risks were minimized. If an accidental spill occurs or a lawsuit arises in the future, the records may help make a case.

A complete system of records helps prove a facility is well run and could be important toward limiting liability in the event of an accident. Record keeping forms should, whenever possible, be filled out during the task being recorded or immediately after, to keep mistakes to a minimum. Also, the greater the detail provided on each form, the easier it will be to recall the actual event if called upon later. Ask your pesticide or fertilizer supplier for standardized forms for record keeping.

Spill Response

Even when proper procedures are followed, pesticide and fertilizer spills occur. The way a spill is handled depends on whether the product can be recovered and reused or the material is unusable and therefore a waste. Spills that can be easily recovered and reused are transferred to a container and stored until the product can be used as it was intended. Spills that cannot be easily recovered may take longer

to clean up and the material collected may not be able to be used as it was originally intended. This material will be considered a waste product and must be disposed properly. Know ahead of time what steps to take when a pesticide or fertilizer spill occurs.

Place spill cleanup supplies and equipment in a well marked, accessible location in or near the storage area. Sufficient quantities of these supplies and equipment should be available to contain and cleanup twice the volume of the largest container.

Always wear PPE, including eye and lung protection, when cleaning a spill or using a decontamination solution. Hydrated lime, sodium hypochloride (bleach) and lye have been used as decontamination solutions. Lye is a strong caustic and can burn skin, eyes or lungs. After decontamination, rinse the area with clean water. Materials produced while cleaning up a spill (mops, absorbent, rinse water, etc.) should be handled either as a pesticide (used as a pesticide in accordance with label directions) or disposed as waste. A determination as to the waste status, hazardous or nonhazardous, must be made in consultation with the state regulatory agency.

Control the spill. CAUTION: Control the spill but do not endanger yourself by being inadvertently exposed to the product. Personal safety is the most important issue. Proper safety equipment must always be worn when handling spills. Put on safety equipment first; then deal with the spill. Identify the source of the spill and control it, preventing further spillage. Upright the overturned jug or close a shut-off valve—anything that will prevent additional quantities of product from leaking out of the container or tank. Inform co-workers of the leak; mark the container, transfer product to suitable marked containers and plan to use the product as soon as possible if it is not contaminated. A metal container that is leaking through a rusted-out spot must be handled carefully because the whole container may be weak and may collapse if roughly handled. When you find a leak, move the other containers that have not been contaminated out of the area, if possible, to make room to work and prevent clean containers from becoming contaminated. In some instances it may be more important to divert a stream of liquid before it enters a water channel instead of first controlling the source. This is a judgment call that must be made by the person on the scene.

Contain the spill. Once the spill has been controlled, contain it with a dike of soil, sand, chemical absorbent "pigs", granules or booms. It is particularly important not to allow any product to get into a water channel or body of water, including storm sewers, sanitary sewers, or septic tanks. If a field spill is headed for a waterway, dam the path of the spill so it ponds up and stops moving or spreading. If it is in the dealer yard or on a concrete loading pad, quickly check to see that all drain valves are closed. Identify where the spill might go if the liquid overflows a containment area or breaches a hastily built soil dam. **CAUTION: Never hose down the area until cleanup is completed as this only enlarges the problem.**

Report the spill. During a cleanup, time is of the essence. As soon as possible, call authorities for help and information on cleaning the spill. Many states require that a spill be reported within 24 hrs of an accident and cleanup start immediately. Under SARA Title III, spills of some pesticides that are over the RQ must be reported immediately. In Florida, this means within 15 min and failure to do so can result in fines of up to $25,000. Regardless of the law, removing drenched soil prevents a rainstorm from washing it away or leaching into groundwater.

Once the spill is controlled and contained, call the manufacturer for advice on handling and cleaning up a spill of their pesticide or fertilizer. SARA Title III defines a reportable spill as one that exceeds the RQ for that product. Obtain a copy of *Farm Chemicals Handbook*, Appendix A. Call the local emergency planning committee, the local EPA office or the state health department. If a leak accidentally enters a city drain, notify the sewer treatment facility that pesticides or fertilizers have entered the drains.

Many states do not require reporting a spill that occurs within a diked area or a small spill on a concrete warehouse floor or paved driveway that does not enter a drain. A good rule of thumb is to report a spill if it occurs in a field, flows into water, or threatens public health or the environment, or if you are not sure what to do. The spiller's responsibility is to minimize the harmful effects from the spill to air, land or waters of the state and to restore the environment.

Clean up the spill. Once the situation has stabilized and it appears the spill will not spread, decide how to clean the area. If a concentrated product, such as a pesticide, spills into a containment facility, it usually can be pumped up, filtered, stored and reused. Recover as much of the product and store it in a container until it can be reused. Read the label for specific decontamination directions. Use MSDS to determine appropriate cleanup procedures. You can receive additional information by dialing the emergency telephone number listed on the label or by calling CHEMTREC (Chemical Transportation Emergency Center) (800) 424-9300, Appendix B.

Spills that cannot be pumped can be absorbed. A variety of products are available. Common absorbents are activated charcoal, vermiculite, pet litter, limestone, kavlinite, clay and soil. Several companies now offer absorbent pillows or "pigs" for use to clean spills. These work extremely well and are already standard equipment in many dealerships around the country.

When liquid, such as an herbicide, spills on the soil, all the dampened soil plus 6" below should be dug up and disposed. In many states, it may be possible to mix a granular absorbent or contaminated soil with

fertilizer or manure and spread it onto the labeled site if the amount is lower than the labeled application rate. If liquid spills onto a gravel driveway, the gravel can be retrieved and washed. Capture the rinse water and apply it to a field.

If reapplying contaminated soil to a field is not an option, determine how the waste is to be handled and proceed accordingly. In Illinois, for example, special landfills have been opened where cleanup materials can be taken. These facilities are neither municipal landfills nor hazardous waste landfills, but are specifically developed for materials such as soil with pesticide or fertilizer residues. In some cases materials may be considered hazardous waste which must be handled appropriately.

Material recovered from fertilizer spills, rinsate or contaminated rainwater can be used on agricultural land as fertilizer. However, application rate must not exceed that applied under normal cropping patterns.

Material recovered from pesticide spills, rinsate or contaminated rainwater can be landspread on agricultural land if the material still has some value for use as a pesticide. Again, application rate must not exceed label rates that are applied under normal practices. It is a violation of FIFRA to apply a pesticide to a site or target crop not on the label of that pesticide. If a nonsegregated rinsate had some labeled site common to all the pesticides it contained, it could be legally applied to the site.

Recovered material that can no longer be used for its originally intended purpose is considered waste. Check with the appropriate state water quality or waste management agency for guidance on disposal, Appendix D.

Transporting Pesticides

Use the current DOT *Emergency Response Guidebook*, DOT P 5800.5, as part of the emergency response plan, Appendix A. This book contains about 3,000 chemicals, identified by their common trade names, an I.D. No. and a Guide No. The chemicals are cross-listed by I.D. No. and alphabetical sequences. Chemicals with similar characteristics from the standpoint of:

- Fire or explosion potential.
- Health hazards.
- Emergency action required.
- First aid.

are grouped under a common "potential hazard" guide number, from Guide No. 11 to 75. The United Nations Classification System for chemicals is used as part of the hazardous materials placard. The U.N. chemical classifications are:

- Class l, Explosives.
- Class 2, Gases.
- Class 3, Flammable Liquids.
- Class 4, Flammable Solids; Spontaneously combustible materials and materials that are dangerous when wet.
- Class 5, Oxidizers and Organic peroxides.
- Class 6, Poisonous and etiologic (infectious) materials.
- Class 7, Radioactive materials.
- Class 8, Corrosives.
- Class 9, Miscellaneous hazardous materials.

The book lists nonfire toxic hazards for area evacuation purposes, plus a table of color-coded visual identification placards of dangerous chemicals by guide number.

11. RINSATE MANAGEMENT AND WASTE DISPOSAL[11]

A dealer, commercial applicator or farmer involved with pesticides or fertilizers must contend with the proper disposal of rinsate and waste. Disposal options are determined by technology, liability, government regulations and/or economics. The technology, information and recommendations for handling pesticide waste are continually changing, giving way to new, safer methods and alternatives. The liability and associated costs of cleaning a contaminated site are high and long term, making regulators and users extremely cautious in dealing with waste. Continually changing regulations at the state and federal levels may make presently acceptable practices illegal in the future. Economical methods of waste disposal that allow all users access to proper and safe alternatives are needed.

There is a difference between rinsate and waste. Rinsate can be reused, however it can become waste if there is no longer an opportunity to use it in an acceptable manner. Waste must be disposed. The flow chart in Fig 83 is a simplified look at the handling and decision process for dealing with pesticide rinsate and waste. Fig 83 points to the need for research into disposal methods, site assessment and remediation, see *Agrichemical Dealership-Site Assessment and Remediation*, Appendix A.

Waste Reduction Practices

Effective waste management practices reduce the amount of waste (containers as well as product) that needs to be disposed. To minimize waste:

- Purchase only the amount of product needed for each season. Avoid overwintering products; freezing renders most products ineffective and they become waste.

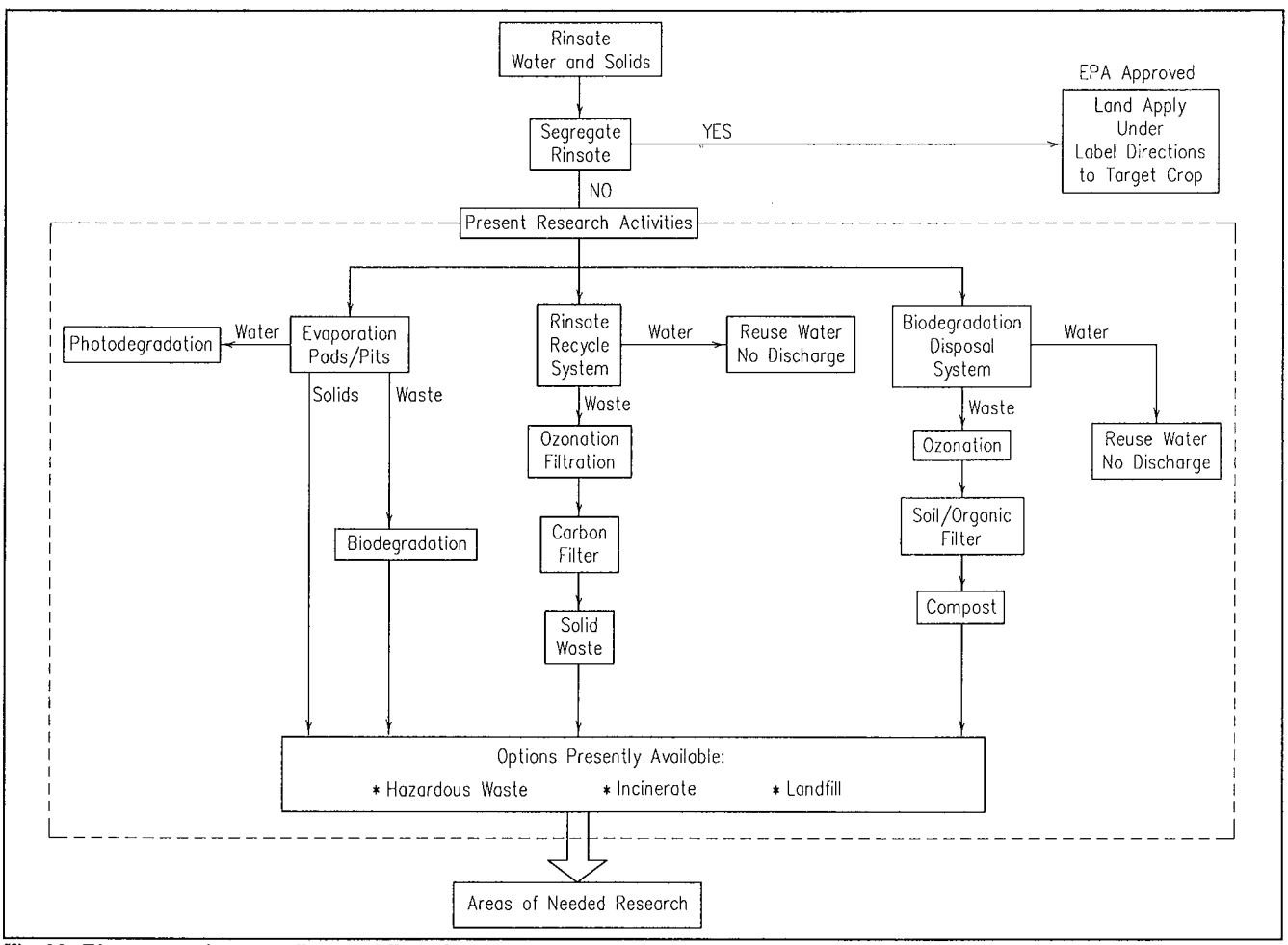

Fig 83. Rinsate and waste disposal flowchart.

11 Vern Hofman, Extension Agricultural Engineering, North Dakota State University, Fargo; David W. Kammel, Agricultural Engineering Department, University of Wisconsin Cooperative Extension, Madison.

- Know the exact area to be treated to calculate the purchase quantity and to minimize unused pesticide mix. Prepare only a sufficient amount for the job.
- Use older products first to minimize deterioration of containers stored for long periods of time.
- Use pesticides for their intended purpose before they are no longer effective.
- Calibrate or modify the sprayer to optimize application rate and minimize leftover spray mix.
- Schedule spraying to allow use of leftover mixtures on subsequent jobs to minimize the number and volume of tank rinsates. Schedule field work to reduce rinsing between crops (e.g. corn followed by soybeans).
- Attach water tanks to equipment to wash equipment off in the field instead of at the farmstead. Use high pressure, low volume systems for rinsing the equipment exterior and the interior of spray tanks. Avoid repeated washing in the same location; stay away from wells, surface water bodies, field tiles and inlets.
- Provide temporary storage of pesticide mix that can be used later. Know its mix shelflife and pH status.
- Use rinsate as part of make-up water for subsequent applications.
- Use minibulk and SVR containers to reduce the need for many small containers.
- Avoid incompatible mixtures. Check labels for compatibility before mixing pesticides and/or fertilizers. Regard incompatible mixtures as waste and dispose accordingly.
- Return unused, unopened pesticides to the dealer for credit to prevent the need to store them on the farm for long periods of time.
- Store pesticides in original labeled containers at proper storage temperatures in locked or otherwise secured building.
- To prevent accidental mixing, store pesticides of like brand or type together and in separate containment tub to catch spills or leaks due to ruptured or punctured packages.
- Identify and dispose unlabeled products.
- Modify equipment to reduce the amount of product left in the "empty" tank.
- **Do not reuse pesticide containers for any other use. It is illegal.**

Rinsates

Rinsate describes water, and sometimes solids, contaminated with pesticides or fertilizers of relatively low concentration (less than field strength application rates) that is collected in the sump of a mixing/loading pad or secondary containment dike. Rinsate comes from several sources including:

- Precipitation falling on a contaminated mixing/loading pad.
- Water from washdown of the mixing/loading pad to clean up a spill.
- Dirt, rock, mud and other solids washed into and settling in the sump of a mixing/loading pad or secondary containment dike.
- Water from exterior washdown of application equipment.
- Diluted field strength spray mixture flushed from application equipment tanks and booms.

Although rinsate is usually considered to be the water portion, quite often solids, such as dirt and rock, also collect in the sump and become contaminated sludge. External vehicle dirt, mud, and trash from commercial or farm field sprayers, or dirt blown into the sump may become contaminated with pesticide. If this contaminated sludge is from only one pesticide or a compatible mix, the material can be land applied at or below the label rate onto the target crop. Keep sumps clean so that if a spill occurs, only liquids have to be handled for disposal. **CAUTION: Sludge contaminated by unknown or incompatible pesticides is a hazardous waste requiring specific legal disposal processes.**

To minimize waste disposal, a well designed facility and rinsate handling system is necessary. Develop a rinsate management plan to minimize waste production and establish rinsate handling procedures and disposal practices.

Rinsate Management

Effective waste management begins with minimizing the amount of unused mix and reducing waste material generated. Develop strategies and practices that reduce the amount of spillage, rinsate and wash water. Reusing pesticide rinsate as makeup water in future mixes or applied as a dilute field solution is a primary objective of waste management.

Rinsate that is contained for use as a diluent for future field mix makeup and application in accordance with the pesticide label is not considered a hazardous waste, and is not restricted to a specific storage period. However, prudent management suggests that rinsate volumes be minimized and used as soon as practical. Check with federal, state and local officials to determine the maximum storage period for hazardous waste rinsate.

One method of disposing rinsate is to use it as part of the makeup water for subsequent batches of the same pesticide. Use 10-20 gal of rinsate with 80-90 gal of fresh water/100 gal of makeup water for new batches. Using 20 gal of 10% field strength rinsate/100 gal of makeup water adds only about 2% of active ingredient to the new batch; 10 gal rinsate/100 gal adds only about 1% active ingredient to new batches. A 1%-2% addition to field strength is well within label rates on most pesticides, and is more accurate than the metering or measuring accuracy of most applicators.

When sprayers are empty (stop pumping or "run dry"), they usually contain 2-10 gal of field strength spray (depending on sprayer size and design) that can not be pressurized and forced out of boom nozzles. To adequately rinse a spray system, use a 10:1 ratio of rinse water to field strength pesticide. This dilutes the rinsate to about 10% of field strength for transfer into 200-600 gal high density polyethylene, fiberglass or stainless steel tanks. Always mark each tank to identify each pesticide rinsate, crop or application.

Construction of secondary containment systems and loading pads without roofs plus the exterior washing of aircraft and ground sprayers can generate large volumes of liquids for disposal if not carefully managed. Rinsate and wastewater management includes:

- Roofing facility pads with 30° angle (or greater) roof overhang beyond pad edges, Fig 36, to minimize or eliminate precipitation falling on pad.
- Segregating recovered materials for reuse based on the pesticide label and compatibility for use, by individual pesticide or specific target application. See Rinsate Segregation.
- Field washing application equipment, rinse tanks, booms, etc. then apply rinsate to target area. See Field Washing.
- Minimizing the surface area that is contaminated, thereby reducing volume of water needed to clean an area. See Minimizing Contaminated Surface Area.

Rinsate Segregation

Segregating pesticide rinsate according to the crop to which it can be applied allows reuse and reduces waste and waste disposal concerns. This is the first and foremost option for waste reduction because it is the simplest available option and is environmentally sound and economical. From a practical standpoint it may be the only option. The decision to segregate may seem insignificant, but the implications and alternatives available based on that single action may not be fully realized until farther along in the planning process. A mixture of corn and soybean herbicides is an example of a rinsate that is not segregated and cannot be applied to either crop because of the presence of an herbicide not labeled for use on the target crop. It is a violation of FIFRA and state laws to apply rinsate or waste to nontarget sites.

Store pesticide rinsates generated from cleaning specific pesticides from the applicator, plumbing and boom. Maintain the identity of stored rinsate so reuse is possible. Label rinsate tanks for each product or application to reduce the possibility of errors when using rinsate for makeup water. **CAUTION: Be sure all potential product mixes are compatible with each other and for the target crop or application. Even in dilute state, serious damage can result from incompatible mixtures.** Rinse and thoroughly clean out tank and change tank markings if switching pesticides for a specific crop or application. **CAUTION: Do not use the tank for two different crops or target applications.** The number of rinsate storage tanks needed depends on the types and number of products used, or the number of crops or target applications (trees, lawns, right-of-ways, etc.). Three to six tanks allow flexibility. Do not store a rinsate unless it can be added to a pesticide mixture and applied to a target application.

Field Washing

Field washing minimizes labor intensive sump cleanout and disposal of contaminated soil. Ground sprayer wash water and mud may be considered hazardous waste if collected on loading pads because of the accumulation and combination of products and sludge.

When a particular application is finished, rinse equipment and immediately apply rinsate to the field being treated. Or, apply to an alternative label-approved site, making sure that application rate does not exceed the approved label rate for that use.

Thoroughly clean the sprayer system so all pesticide residue is removed. Carry enough clean water on the sprayer, or have it available in the field, to provide two to three rinsings and exterior washdowns of the sprayer, especially when changing pesticides. Wash equipment at random locations in the field and avoid wells, surface water bodies, tiles, inlets, etc.

Minimizing Contaminated Surface Area

When changing from one tank mix to another, repairing equipment, calibrating sprayers, changing nozzles, etc., drips and leaks occur and necessitate washdown of the entire pad. A variety of equipment and strategies can reduce and/or confine these incidents to a smaller area.

Boom-length sheet metal, stainless steel or fiberglass troughs are useful for pumping rinse water through booms and nozzles. Troughs can be stationary or portable and can be lifted up around ground booms or booms can be lowered into the troughs. Troughs catch the spray and drain to a suction hose connection for transfer to rinsate storage tanks, thereby facilitating rinsate segregation. They also catch water during spray boom calibration.

Wear PPE when using a trough rinsate collection system. Diluted pesticide can still be very harmful if splashed on the body, or if vapors are inhaled or absorbed through eyes, ears, face and other sensitive exposed skin areas.

Mount spray rinsing nozzles in spray tanks, as shown in Fig 84, to facilitate thorough tank cleaning. Aircraft inflight rinse water tank systems are being developed, but these require FAA authorization as an approved airframe modification for each aircraft before installation.

Fig 85 shows an aircraft closed sprayer plumbing rinse system; this same process can also adapt to ground sprayers. Provide a drain hose connection at the low point of the spray boom system with a means

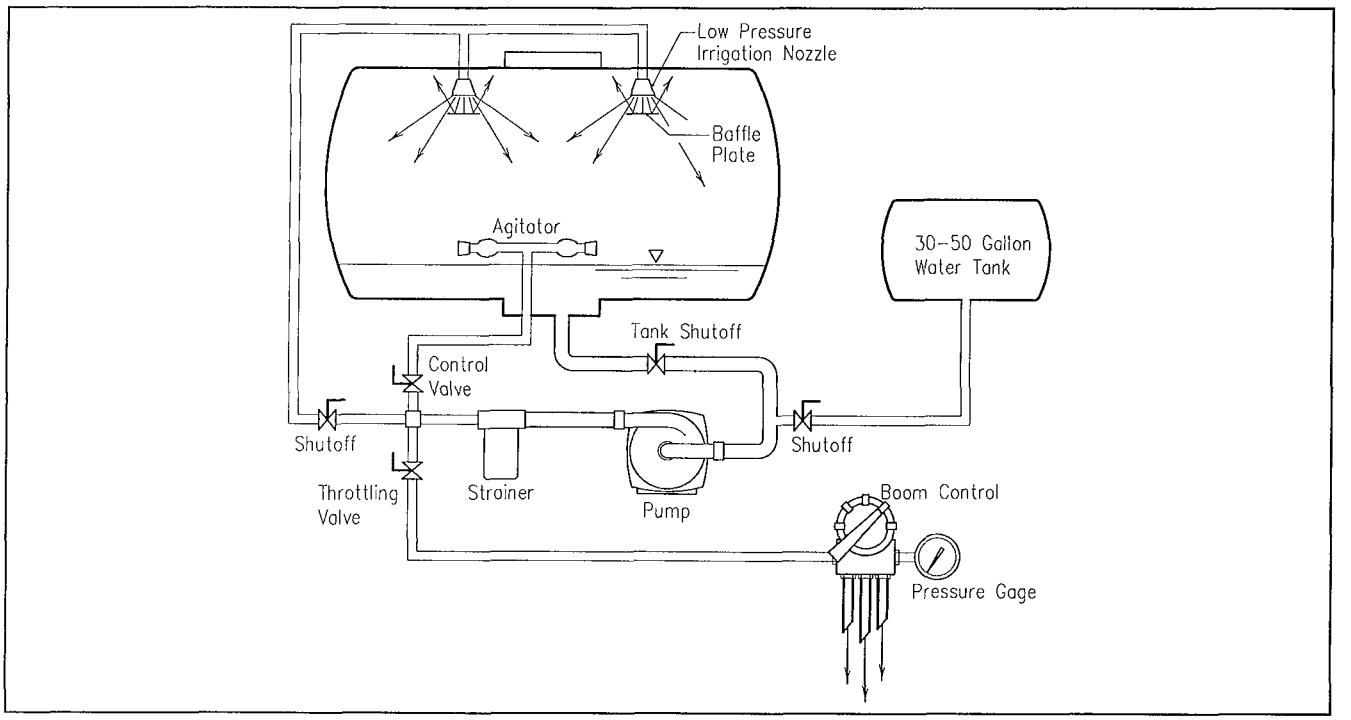

Fig 84. Sprayer tank wash system for in-field rinsing.

of flushing ground sprayer tanks or plumbing from aircraft spray pumps for internal cleanout of spray systems. An elevated water supply tank helps the transfer pump suction pull water through the boom system. If pressure flushing is used, use a low pressure regulator, set at 3-5 psi, to keep from pressurizing the boom and spray nozzles above normal diaphragm spring pressure levels (normally about 7 psi), and releasing rinsate onto the mixing/loading pad or ground. Adapt transfer pumps so that sprayer transfer hoses can be easily switched from the pump's discharge to the inlet or suction side, to pull the rinsate from the sprayer drain connection and transfer it to the rinsate holding tanks.

A simple and efficient portable rinsewater holding tank is shown in Fig 86. The tank, made of stainless steel, contains baffles to reduce splashing, and has tight fitting lids. It can be rolled under an aircraft to drain the unused field mix pesticide or rinsate into the tank for transfer by suction hose to the mix tank or a storage tank. Tanks should hold 100-150 gal so adequate wash water is used to clean spray planes and the pesticide is diluted by a 10:1 ratio.

An alternative to rinsate storage and management systems is direct injection of pesticides into the carrier fluid at each spray nozzle. These systems hold the potential of completely eliminating premixing field strength pesticide mixes. However, injection systems must also be managed carefully as the pesticide injector pump transfer tubing requires cleaning after a particular pesticide is used. This requires a flush water field cleaning system and spraying of the rinsate on the target.

Wastes

Waste is defined as a material or container that cannot be used as it was originally intended. It might include nonsegregated rinsate, empty containers, unusable or unidentifiable pesticides and materials contaminated with a product. Waste must be disposed in an appropriate and accepted manner to reduce human exposure and environmental contamination of soil, surface water and groundwater. Sludge contaminated by pesticides may be hazardous waste requiring specific legal disposal processes. The amount of active ingredient is one measure of the hazard of the waste. EPA does not usually consider external sprayer washwater a hazardous waste. **NOTE:** Some states may not allow this exemption.

Prepare a facility management plan that addresses the handling and disposal of pesticide wastes and containers. Soil, surface water and groundwater contamination of sites can often be attributed to past poor practices involving waste disposal.

Depending on the product, the waste could be classified as hazardous. Waste is classified hazardous because federal or state regulations define it as such, or its characteristics (e.g. corrosivity, ignitability) may require that it be classified hazardous and be tested before disposal. There are specific requirements on transporting and disposing hazardous waste. A certified hazardous waste transporter must deliver the waste to an approved landfill. There may be no hazardous waste landfills in your state. Check with local environmental regulatory officials before disposing a hazardous waste.

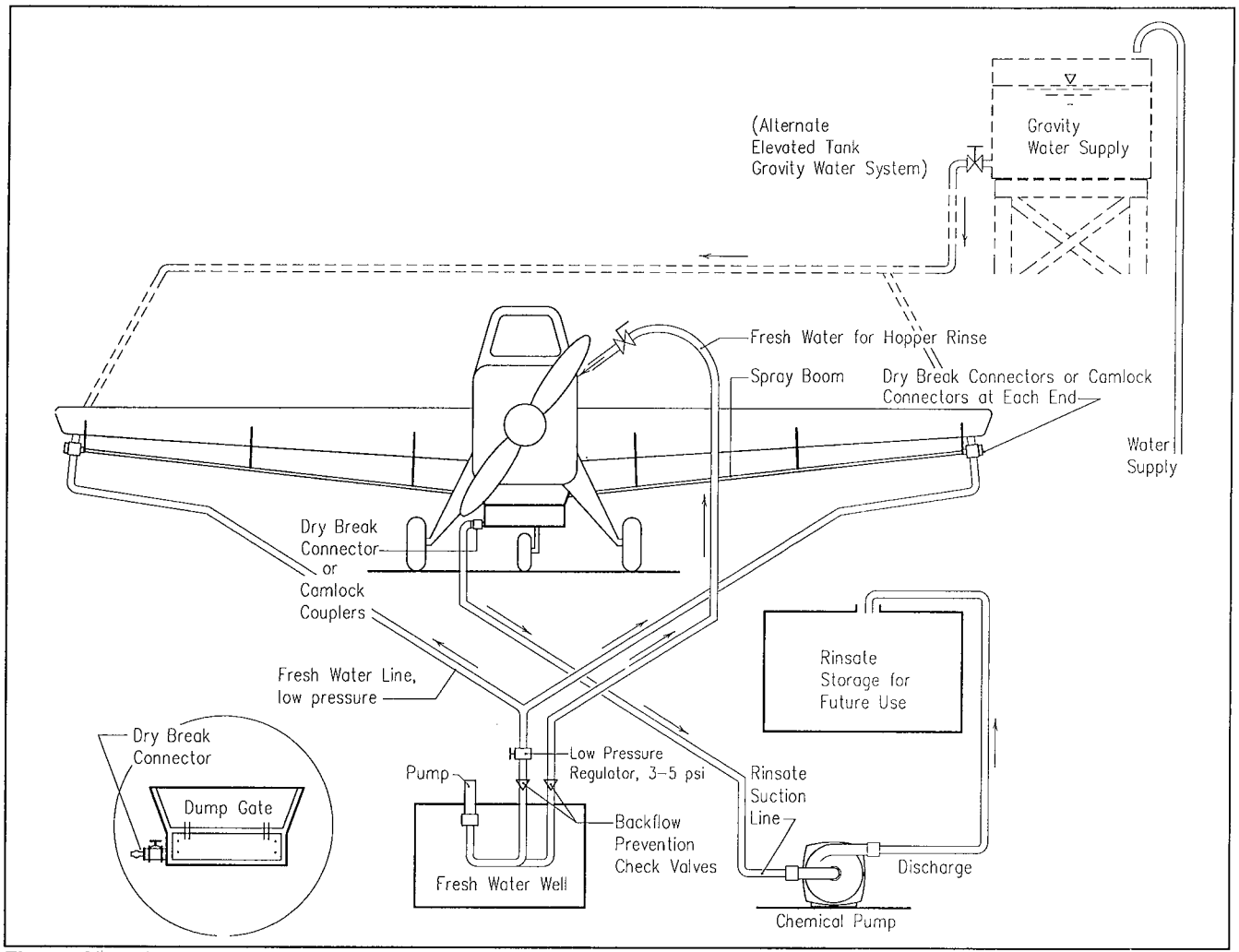

Fig 85. Aircraft closed sprayer rinsing system.

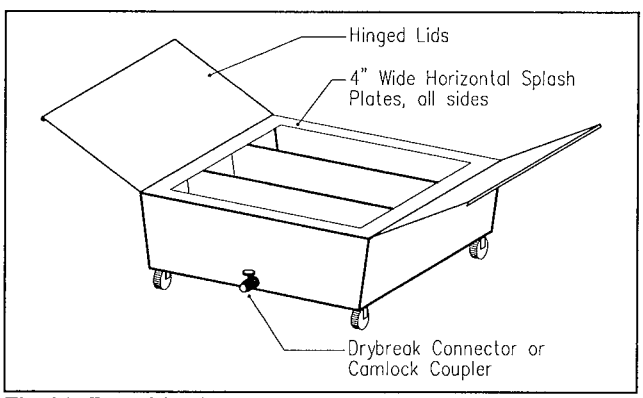

Fig 86. Portable rinsewater holding tank for aerial applicators.

Determine waste status—hazardous or nonhazardous—in consultation with the state hazardous waste agency. Examples of nonhazardous waste are rinsates from triple rinsed containers or empty bags that can be disposed in a sanitary landfill. Examples of hazardous waste are spilled product that can not be disposed under label directions, products rendered unusable by extreme heat or cold, residues in containers, outdated products, rinsates and unused products that cannot be used later. Dispose hazardous waste in a licensed hazardous waste management facility. Do not mix nonhazardous and hazardous wastes because the mix becomes hazardous and more difficult and expensive to dispose properly.

It is illegal to dispose any pesticide, pesticide container or pesticide-related waste by open dumping, water dumping, oil injection or open burning except for small quantities if federal, state and local regulations permit. No pesticide or pesticide-related waste can be disposed or stored in such a manner that it may contaminate food, feed, or food and feed packaging materials. The penalty for violation of these storage and disposal regulations is the same as that for violating any other provision of the federal law. These regulations are issued under the authority of FIFRA. Violations of FIFRA by commercial applicators are punishable by fines up to $5,000 per offense. Private applicators can be fined up to $1,000 per offense. "Per offense" could conceivably mean for each illegally disposed container. Violations of waste disposal regulations can result in much higher fines; up to $25,000/violation/day.

Disposing Pesticide Waste

Keep in mind that no ideal method is available; the best strategy is to reduce volumes of waste as much as possible by:

- Using the pesticide according to label directions as a means of disposal. This practice is not always feasible, especially when the site of application is a food crop or when the label limits the frequency of application to a site. Read the label and be sure that this disposal method is appropriate for the pesticide in question.
- Returning greater amounts of pesticides to the product manufacturer for reformulation or disposal, if the manufacturer is willing to accept it.

DO NOT dispose pesticide waste in the following ways:

DO NOT pour pesticides down the drain or into water.

DO NOT pour pesticides on the ground.

DO NOT discard pesticides in desolate areas or ravines.

DO NOT bury excess pesticides.

DO NOT transfer pesticides from their original containers to other containers for means of making disposal easier.

DO NOT burn pesticides or pesticide containers.

DO NOT use pesticides for other than their labeled uses.

Research continues to seek reasonable alternatives to the waste disposal problem. Some of the methods described are not fully developed or tested and may not be legal or may require approval in some states depending on interpretations of federal and state regulations. Always check with local environmental regulatory agencies before choosing an alternative.

Following are options for dealing with waste, Fig 83.

Incineration

Incineration of pesticide waste is possible and may be an acceptable method of disposal. There are few incinerators in the U.S. that accept pesticide waste, so transportation and disposal are expensive. Future development of stricter air quality regulations may make incineration less available and more expensive.

Rinsate Recycling System

There are several systems on the market that can recycle nonsegregated rinsates. One system filters the rinsate by passing it through a settling unit, an ozone treatment unit, a particulate filter, an oil filter and finally through drums of activated charcoal (carbon) filter before entering a "clean" water tank, Fig 87. Other systems use similar components in a slightly different combination. The system is a "closed loop" because the recycled water from the system cannot be discharged. The water must be recycled at the facility to rinse equipment or empty containers. It cannot be used as makeup water for spray solution or disposed off the site. These systems are vulnerable to freezing and require housing in a secondary containment system. The hazards and economics of disposing particulate and oil filters and recycling drums of activated charcoal must also be considered.

Landfill

Pesticide waste can be treated as a solid waste once it is absorbed (see Spill Response, Chapter 10). Depending on the products, absorbed pesticide waste may be hazardous or nonhazardous. Contact your state water quality agency or landfill. Approved landfills have specific requirements on the amount of liquid disposed in a landfill. Federal regulations allow disposal of registered pesticides in approved landfills. However, most landfills are not willing to accept pesticides due to the associated liabilities. The limited number of sites result in high transportation and disposal costs. Even after disposal, the original owner of the waste is still potentially liable for contamination that might occur from the waste. Landfilling may not provide a proper environment for pesticide degradation.

Evaporation Pads

This system reduces the volume of rinsate and waste by evaporating water from the solids. Solvents and pesticides may volatilize undegraded and cause

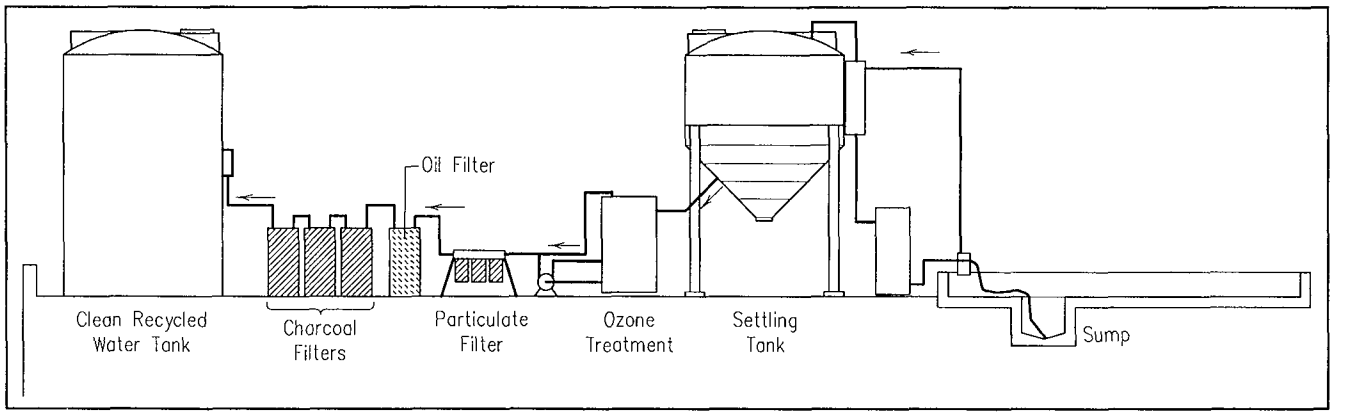

Fig 87. Rinsate recycling system.

air pollution. The system may not work well in climates with low pan evaporation rates and regularly freezing temperatures.

Experimental Disposal Options

Evaporation Pits (Biological Digester)

Universities in California developed evaporation pits approximately 10 yrs ago. They use two systems to prevent leaks and migration of rinsate to groundwater. A primary barrier is provided by a butyl rubber liner placed at the bottom of the pit approximately 25'x30' and 2' deep. The liner is overlaid with layers of sand and gravel covering a buried grid of perforated drain tiles designed to evenly distribute pesticide rinsate. The porous layers are covered with 12"-18" of sandy loam. Pesticide rinsate migrates up due to evaporation at the soil surface. A translucent fiberglass roof enhances evaporation and keeps rain out. As the rinsate moves through the beds, a number of processes result in degradation. Anaerobic bacteria work in the lower portion of the bed. Aerobic bacteria and fungi work in the upper portion of the bed. Lime can also be incorporated into the soil surface to further enhance degradation. At the soil surface UV solar radiation degradation occurs. One pit could handle up to 40,000 gal of rinsate/yr and the systems were reportedly performing adequately.

The original bed designs were forced to close due to stricter California regulations. Double liners were required and the site could not be within a 1/2 mile of any well or irrigation ditch. The beds were redesigned to satisfy technical requirements but the final decision not to rebuild the pits was based on a requirement to provide a hydrogeological assessment report before the old sites could be abandoned and soil transferred to the new sites. These reports average $70,000, which was more than the cost of hauling and disposing the soil.

Biodegradation Disposal System

There are several experimental systems under development for disposing nonsegregated rinsate. A Beltsville, MD system uses two chambers. The first chamber uses an ozone treatment to degrade pesticides. A second chamber or soil column provides microbial degradation.

Another experimental system is under study at North Dakota State University, Fig 88. It combines evaporation and biodegradation. Evaporation tanks store the rinsate for not more than 90 days to comply with temporary storage guidelines. Photodegradation from solar radiation and hydrolysis takes place in the tanks. The solution is pumped onto a compost pile of hay, straw or other organic farm waste. This starts the second stage of microbial breakdown. Naturally occurring bacteria, fungi and other organisms use the waste as a food source. Experience with the system is limited but other research suggests that the compost material may have to be contained for up to 18 mos depending on what pesticides are in the waste. The compost is contained on a concrete pad with retaining walls and a roof with no sides allowing air to move over and around the pile. Stirring and addition of water may be required. This compost could be potentially spread on fields. Sampling of the compost pile can determine the rate of decomposition and level of contamination.

A third system under development at Virginia Polytechnic Institute uses a similar concept. Passing rinsate through an organic material (peat moss, hay, straw) filters out the pesticide. The organic material is then composted using selected natural bacteria to biologically degrade the waste. USDA researchers have also developed a system that breaks down the pesticide chemical structure by a similar biodegradation process using selected bacteria.

A combination system may incorporate biological degradation using bacterial and aerobic breakdown,

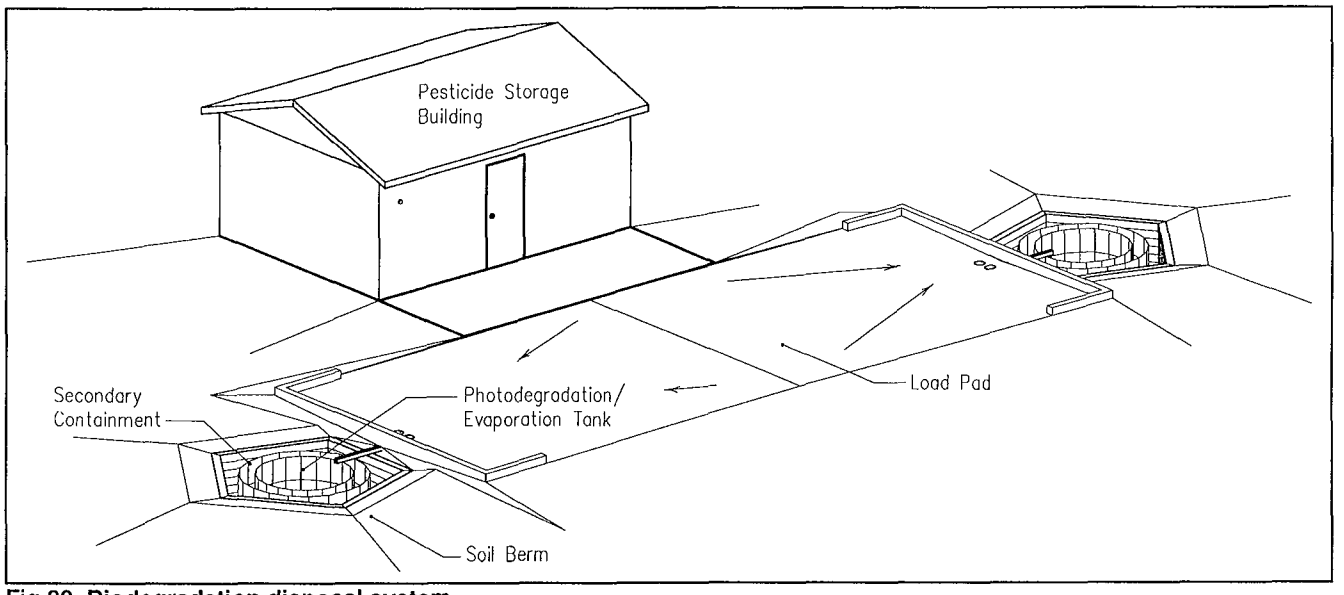

Fig 88. Biodegradation disposal system.

a sludge settling tank, and a multiple oil and carbon filtration with an ozone generator incorporated in the process. Several commercial units have been recently introduced.

A problem with these systems is determining when a material is detoxified or "clean". The level of contamination in a waste that is considered to be detoxified has not been defined by EPA or state officials. Therefore, there is no measure of minimum or baseline contamination at this time.

The authors cannot substantiate the performance claims of the experimental disposal options, but point them out as possible alternatives for future follow-up and evaluation by site visits to customers/owners of each type of system.

Disposing Pesticide Containers

Pesticide containers come in many shapes and sizes and are most commonly made of paper, glass, plastic or metal. As with the products themselves, there is no ideal method of container disposal. Yet again, the best strategy is to minimize the number of containers requiring disposal:

- Refillable containers eliminate the need for container disposal. These can be returned to the manufacturer.
- Some states allow plastic and metal container recycling. Check with the state water quality control agency or department of agriculture concerning disposal and recycling programs in your area.

Containers, whether recycled or disposed, must be as empty of product as possible. So-called empty containers are not really empty. They still contain small amounts of product, even after they have been properly rinsed. For rigid containers, power or pressurized rinsing is preferred, but triple hand-rinsing is acceptable. Rinse empty containers immediately for easier and more complete cleaning, and add container rinsate to sprayer tank. Puncture and crush containers; store in a dry, secure area that allows drainage from containers to be collected and disposed properly. Recycle if possible or take to approved sanitary landfill. Paper bags must be thoroughly emptied and may be disposed in a sanitary landfill. Some metal drum reconditioners accept properly rinsed containers for reconditioning or recycling.

To adequately hand-rinse rigid containers:

- Empty the pesticide into the spray tank and allow the container to drain 30 sec.
- Add rinse water to the container until it is 1/4 full.
- Close container, agitate vigorously for 30 sec, pour rinsate into spray tank and drain for 30 sec. Repeat twice more.
- Recycle, or puncture and dispose the triple-rinsed container properly.

When pressure-rinsing, use a jet spray device to pierce the container bottom so that rinsing and draining can be done simultaneously. Transfer the rinse water into the sprayer tank. Otherwise, the rinse water must be treated as a surplus pesticide and disposed properly. Never dump rinse water on the ground.

DO NOT dispose pesticide containers in the following ways:

DO NOT send nontriple-rinsed pesticide containers to sanitary landfills, reconditioners or recyclers.

DO NOT discard pesticide containers in unapproved landfills or dumps.

DO NOT reuse pesticide containers for other purposes.

DO NOT dispose any pesticide container inconsistent with its labeled directions.

12. MAINTENANCE OF FACILITIES[12]

The life of a containment facility can be substantially extended and its performance improved with regular maintenance. Effective maintenance employs a two-pronged approach:

1. Preventive maintenance to minimize factors that cause deterioration.
2. Timely repair of small problems before they become large ones.

Major threats to the integrity of a facility are frost heaving, poor drainage, concrete deterioration, corrosion of steel equipment and reinforcing, puncturing of clay or synthetic liners, and plumbing rupture as a result of tank flotation.

Preventive Maintenance

Routine Inspection

Routine inspection and maintenance of storage facilities are essential and may be required by law in some states. Designate one person at the facility to be responsible for inspection and maintenance. Develop a routine inspection procedure for the facility that is part of the overall facility management plan. Devise an inspection checklist to be followed by each employee during every inspection. Inspect the facility thoroughly on a seasonal, or at least yearly, basis to stay ahead of deterioration of the facility.

Areas to check include:

- Storage tanks (corrosion and mechanical damage).
- Tank valves and fittings.
- Tank supports and anchors.
- Containment area drainage.
- Emergency equipment.
- Concrete joints and sealants (especially construction and control joints).
- Concrete floor and wall surfaces.
- Sumps and sump pumps.
- Protective coatings and paint.
- Pumps, meters and plumbing runs.
- Synthetic liners and ballast.
- Electrical systems and controls.
- Metering and punch/drain/rinse tanks.
- Sight gauges.
- Deterioration of exterior siding and roofing.

Drainage

The focus after construction is draining water away from the containment facilities. Proper drainage helps reduce potential frost heaving. Watch the runoff control system carefully for 2-3 yrs as the landscaping around the site settles. Avoid ponding. Keep weeds trimmed and maintain a pest control program to prevent rodents, moles, or other animals from burrowing near the secondary containment.

Good Housekeeping

Minimizing exposure of the concrete to pesticides and fertilizers increases the life of the concrete. Keep plastic or metal tubs available to place under all leaking valves and pumps until they are repaired. Fix leaky couplings and valves immediately to reduce concrete's exposure to pesticides and fertilizers, save product and prevent long term corrosive conditions that damage the containment. Clean up pesticides and fertilizers immediately after any leakage or spill to reduce the amount of exposure for the concrete. Sweep or vacuum dry product, then wash pad with detergent.

Clean mixing/loading pads daily to prevent buildup of pesticides or fertilizers. This practice also helps reduce the volume of precipitation that could be contaminated by storm water if the pad is not clean.

Clean concrete with power washers and detergent after contact with pesticides or fertilizers. Take water samples from the sump after washdown and analyze them to determine if the rain or snow melt is suitable for discharge. Otherwise, it must be disposed in a manner acceptable to state and local regulations. Contact your state control official, Appendix D.

Plumbing

Protect plumbing from possible ice damage due to trapped water in the containment or in pumps. Drain and rinse out pumps in cold weather. Elevate pipes and provide a gap between pipes so dirt, leaves, etc. will not be trapped under or around the pipes. Elevating storage tanks allows tank bottoms to dry off periodically and reduces corrosion. Provide 3′ clearance around tanks so there is access to the entire tank to check for leaks. Remove or re-package any small containers that develop leaks.

Steel Corrosion

Corrosion of tank anchors, sump pumps, pipes, grates and any other steel framing can be reduced by "good housekeeping" and timely maintenance. Clean sumps and pumps routinely to minimize corrosion.

---

12 Gerald L. Riskowski, Agricultural Engineering Department, University of Illinois at Urbana-Champaign; Ronald T. Noyes, Agricultural Engineering Department, Oklahoma State University, Stillwater; David W. Kammel, Agricultural Engineering Department, University of Wisconsin Cooperative Extension, Madison.

Washdown of the pad for final seasonal cleanup helps flush product from sumps and plumbing runs. Routinely paint metal tanks, steel frames, grates, anchors and pipes to protect them from pesticides, fertilizers and the weather. Stainless steel can be used to reduce corrosion but is usually very expensive.

Concrete Deterioration

Most containment facilities use placed concrete as the construction material for walls and flatwork such as floors. Concrete is durable, and is able to resist weathering, pesticide and fertilizer attack, abrasion and other deterioration processes. Nevertheless, over time, concrete does deteriorate.

Fertilizer has a moderate rate of attack on concrete at normal temperatures and, if concentrated, may cause rapid disintegration. Concentrated ammonium nitrate can quickly damage high quality air-entrained concrete. Liquid fertilizer is the main cause of concrete deterioration. Dry fertilizer generally has little effect unless wetted. Although pesticides stain concrete, they are not a major cause of concrete deterioration but do contaminate concrete and leak through cracks into groundwater.

There are several ways concrete deteriorates. **Erosion** is caused by the abrasive action of fluid moving across concrete. This occurs under and around pumps and valves that leak. Fluid drains to the sump over a long period of time and attacks the concrete causing ruts to develop. **Scaling** occurs when the surface mortar is lost, exposing the aggregate. This is usually most prevalent on mixing/loading pads where spills regularly occur. Fertilizer stays on the concrete and attacks the surface until it is washed off. Scaling can range from light scaling where only a small amount of mortar is lost to very severe scaling where mortar and aggregate are both lost. Scaled surfaces are very difficult to keep clean because debris settles into the pitted surface. If liquid fertilizers reach steel reinforcement through cracks, joints or porous concrete, corrosion can greatly weaken the steel. Corroded steel usually results from **spalling** where concrete fragments detach from the main body of concrete. Spalling usually occurs near joints and over reinforcing steel, exposing steel and interior concrete to pesticide and fertilizer attack. Simply patching the area without properly cleaning the exposed steel leads to further corrosion.

Protective Treatments

Although concrete is able to withstand exposure to fertilizers and pesticides for short periods, continual exposure eventually causes deterioration. Protective treatments enhance concrete's resistance to deterioration.

Concrete in high traffic areas and areas under valves and plumbing is the most susceptible to deterioration. Surface coatings are especially needed in these areas. Concrete joints require resealing periodically.

Protective treatments are generally in two forms. Joint sealers seal large cracks and joints. Concrete sealers or coatings protect large areas of concrete. Joint sealers and coatings when used, are required to produce a watertight seal, adhere to the concrete, and resist the pesticide or fertilizer. Protective treatments for concrete are available for almost any degree of protection required. Work closely with a coating supplier to determine the best method and materials for a particular situation. Because this is a new area, suppliers may not have experience in this particular application. There is not enough experience yet to show what methods or materials are the best for a particular application, but there are many products on the market that should perform satisfactorily. Make sure the supplier is experienced with this type of application or can show field history of product performance in similar circumstances, such as in the industrial chemical industry. Choosing a good supplier or contractor is as important as choosing the right type of protective treatment.

Coatings can fail in several ways. Fig 89 shows the coating and the interface between the coating and the concrete. In some cases the coating fails but in other cases the interface of concrete and coating becomes weak and shears.

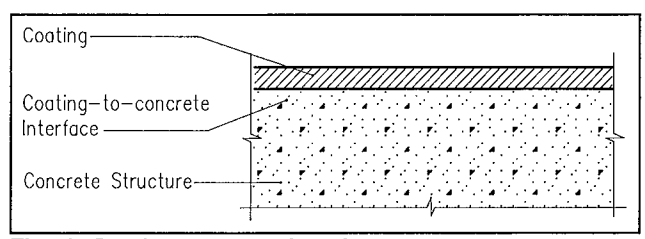

Fig 89. Coating/concrete interface.

Concrete Surface Preparation

Proper preparation of the concrete surface and good workmanship are essential for the successful application of any protective treatment. Allow concrete to cure well before applying a protective sealing coat; moisture in the concrete can cause bubbles or blisters under protective treatments. **Follow manufacturer's recommendations for initial application and reapplication.**

It is important to have a surface free of grease, oil, efflorescence, laitance, dirt and loose particles. The best method of cleaning the concrete surface depends on job conditions. Dry removal of accumulated dirt and soil is best achieved by scarifying, grinding or sandblasting, then vacuuming. Scarifiers, power steel wire brushes and concrete sanders can smooth the concrete, produce nonskid surfaces and remove laitance, paint marks, pitch adhesives and thermoplastic adhesives. Grinders remove weak, friable laitance, high spots, and trowel and other marks. Grinding improves smoothness and wear resistance of the floor. Shotblasting or abrasive blasting removes sur-

face contaminants. Shop vacuum cleaners with vacuum bags make the operation almost dust-free.

When dust cannot be tolerated, use a liquid-based cleaning procedure. There are three stages of wet cleaning:

1. Degreasing.
2. Acid treatment or "etching".
3. Neutralizing to clean thoroughly.

Perform cleaning operations only under conditions where appropriate safety precautions are taken.

To degrease, apply a mixture of a cleaner/curing-compound remover (a chlorinated, emulsifiable solvent), and industrial grease remover (a highly alkaline, low-phosphate, biodegradable detergent), and liberal amounts of water. Scrub the concrete surface, repeatedly, if necessary. Rinse and scrub the surface with clear water, vacuum to a damp condition and then allow to air-dry.

Acid treatment of the surface involves scrubbing the dry floor with an etching solution (a mild organic acid combined with detergents, emulsifiers and solvent). After a vacuum machine picks up residual product, rinse, scrub and flush the concrete surface.

Neutralize any acid left on the surface by wetting the surface with clear water, sprinkling on a detergent cleaner (highly alkaline, high-phosphate, non-residue-forming detergent), scrubbing, rinsing with water and vacuuming to a damp condition. Rinse the concrete again with clear water, vacuum damp-dry and allow to air-dry before applying the new surface finish.

Other wet-cleaning methods include high-pressure water-jet blasting and steam cleaning. Selection of the best method depends on the type and severity of contamination.

Concrete cast against forms is sometimes so smooth that adhesion of protective coatings is difficult. To prepare such surfaces, acid-etch, sandblast lightly or grind with silicon carbide stones to obtain a slightly roughened surface.

After a concrete surface is clean and dry, remove all residue. Various industrial vacuum machines remove microdust particles from a prepared surface. Be sure to dispose any wastes generated during cleaning.

Protective Coatings

Protective coatings for concrete seal the surface to help resist reaction to pesticides and fertilizers. Employ trained, experienced applicators to apply coatings.

There is a large range in costs for various types of repair methods and materials. Coatings may range from \$0.25-\$6.00/ft^2. Because these applications are usually long term, it is probably better to pay a moderate or high price for a system that performs for a long period of time than to pay for a cheap system that requires more frequent application, provides inadequate protection and results in structural damage to the pad.

The following information is a general guide to some general types of concrete sealant products. Many of these products have a large range of formulations specific to a particular need. Develop a list of pesticides and fertilizers stored or handled at your facility, and then talk directly to the manufacturer or distributor and discuss your needs with them before choosing a suitable coating.

Boiled linseed oil and mineral spirits

A mixture of 50% boiled linseed oil and 50% kerosene or mineral spirits has been used to reduce deterioration of concrete from deicers or salts such as ammonium nitrate. Two applications are usually necessary for protection. Experience shows that performance is variable depending on the concrete. Reapplication is required at 1-3 yr intervals to provide continuous protection.

Epoxy

An epoxy coating is generally a two-package system consisting of epoxy resin—which may be formulated with extenders, diluents and fillers—and a catalyst, activator or curing agent. Its coating properties depend on the type and amount of curing agent used. The pesticide and fertilizer resistance of single-package coatings, epoxy esters, are generally inferior to the two-package epoxies. Some epoxy formulations are 100% solids and others are solution coatings. Follow the formulator's recommendations in selecting the right system for the protection needed. Also, follow the formulator's recommendations for application procedures, temperatures and allowable pot life.

Urethane

Polyurethane coatings may be one- or two-part systems. A one-part system may be moisture cured or oil modified. Coatings that cure by reacting with moisture in the air must be used on dry surfaces to prevent blistering during the curing period. Oil-modified coatings dry by air oxidation and generally have the lowest pesticide and fertilizer resistance of the urethane coatings. Urethane coatings are easily applied by brush, spray or roller. Careful surface preparation is required to ensure adhesion; recoating is difficult unless the coating is sanded. Multiple coats are usually recommended.

Polyester and vinylester

Polyester and vinylester are two- or three-part systems consisting of polyester or vinylester resin, a catalyst and sometimes a promoter. The materials come in a range of solids content from putty form to coatings that can be sprayed, brushed or rolled on. These systems can be formulated for a large range of pesticide and fertilizer resistance and are resistant to abrasive traffic. They are usually applied in five laminates to build a floor system.

Polyureas

Polyureas are two-part compounds, similar to polyurethanes, that are applied by a hot mix gun. The compounds mix at the nozzle under pressure at tem-

peratures of 140 F-160 F. They are not sensitive to moisture and dry in 6-15 sec. They can be walked on within a few minutes of application. They have excellent abrasion and chemical resistance to a wide variety of pesticides. They are applied in multiple layers to a 15-45 mil finish.

Vinyls

Chloride-acetate and polyvinylidene chloride are the vinyls used extensively in corrosion control. The resins are soluble only in strong solvents. Due to the high viscosity of the resins, only solutions of low solids content can be made. Multiple coats are therefore required for adequate film thickness. Spray vinyls onto dry surfaces because their fast drying (30 min) makes brush application difficult.

Chlorosulfonated polyethylene

Chlorosulfonated polyethylene is a relatively new product more commonly known as *Hypalon*. Four coats of about 2 mil (0.05 mm) each and an appropriate primer are normally recommended to eliminate pinholes. A fill coat of grout or mortar is required because the paint film does not bridge voids in the concrete surface. Moisture on the surface may prevent good adhesion.

Hydraulic cements

This is a dry powder compound of portland cement, silica sand and a catalyst. When applied in a slurry form to concrete, it produces a crystalline growth within the pores and capillary tracts that seals the concrete from water, pesticides and fertilizers. It can also be used in a drypack patch form for crack and joint repair. Because the process is catalytic, the material can reseal future defects in the concrete.

Concrete Repairs

Evaluation of Repair Method

Damage to concrete may result from poor design, faulty workmanship, pesticide and fertilizer attack, corrosion of embedded metal or lengthy exposure to an unfavorable environment. Whatever the cause, it is essential to assess the extent of the damage and determine if a major portion of the structure is of suitable quality on which to build a sound repair. Based on this information, choose the type and extent of repair. As problems occur, such as concrete cracking, records and notes of decisions made during the design and construction process will help find the best solution (drawings, specifications, pictures, construction techniques, etc.).

Cracks in Concrete

Concrete cracking is a fact of life; deal with it as a necessary part of routine maintenance. Cracks are classified by direction, width, depth and length. Pattern cracks are random cracks uniformly distributed on the surface. They indicate tensile stress in the surface layer caused by expansion of the inner concrete. Single continuous cracks run in definite directions often in parallel at rather definite intervals. They indicate stress in the direction perpendicular to them. Crack widths vary: fine (less than 0.04"), medium (between 0.04" and 0.08"), wide (over 0.08"). Fine and medium cracks may be too small to caulk or grout and are usually still watertight. They can usually be sealed by applying a protective coating or sealer. Wide cracks may need to be enlarged in order to seal the concrete against further interior damage.

Cracks that remain the same size and pattern over time are called dormant cracks and can be repaired. Cracks resulting from settling or temperature changes, and change size throughout the year are called active or working cracks and are more difficult to control. **Working cracks are warning signs for the manager; do not cover them up.** Determine the reason for the crack and take suitable measures to correct the situation. Routine record keeping of the length, width and location of cracks locates where cracks are occurring and helps identify potential problems. Whether a crack needs repair, to restore structural integrity, or sealing depends on the nature and cause of the crack, its location and extent. Define the type, severity and reasons for cracks before taking action.

Crack Repair

Routing and Sealing

The simplest and most common method for repairing large cracks is routing and sealing. This method works on dormant cracks with no structural significance. Route or enlarge the crack along its exposed face. Clean, fill and seal the crack with a suitable joint sealant, see Figs 90 and 91. Routing may be omitted but the repair will not last as long. Relatively untrained workers can handle this method, and it is good for sealing both fine pattern cracks and larger isolated defects. Routing and sealing does not work on active or working cracks. Use foam backer rods in joints deeper than 0.5" to reduce amount of joint sealant required.

Active cracks can be routed, cleaned and filled with a suitable field molded flexible sealant. Flexible surface seals may be used where the crack is not subject to traffic and appearance is not important.

Clean the surface of the routed joint with an air jet and let it dry before placing the sealant. The sealant keeps water from reaching the reinforcing steel, stops hydrostatic pressure from developing within the joint, prevents staining the concrete surface and gets rid of moisture problems on the underneath side of the member.

The choice of sealant depends on how tight or permanent a seal is desired. Epoxy compounds are often used. Hot poured joint sealants work well when thorough water-tightness of the joint is not required

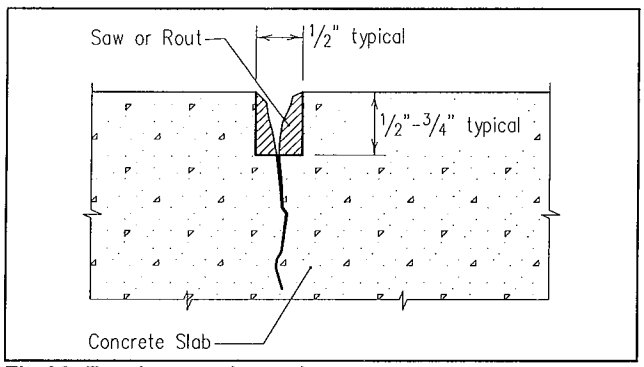

Fig 90. Routing crack repair.

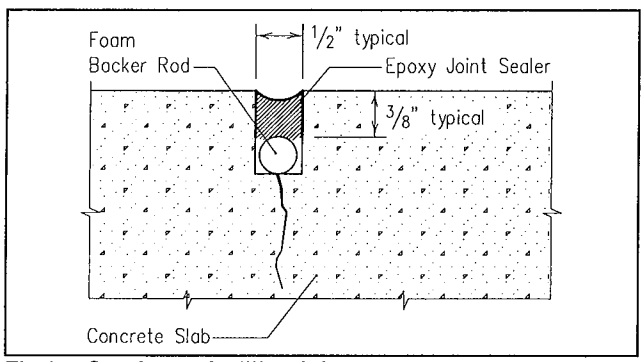

Fig 91. Crack repair filling joint.

and appearance is not important. Urethanes, which remain flexible through large temperature variations, have been used successfully in cracks up to 3/4" wide and of considerable depth.

Do not expect routing and sealing to work on active cracks or cracks subject to strong hydrostatic pressure, except when sealing the pressure face, in which case some reduction in the flow can be obtained.

Epoxy Injection

Cracks caused by a structural problem can also be repaired. Epoxy injection is the most common method of restoring structural soundness of cracks that are dormant and can be prevented from further movement.

Chemical Grouting

Chemical grouts can be used in very fine fractures, in moist environments and with wide limits of pot set time. Fill narrow cracks with grouts consisting of chemical solutions that combine to form a gel, a solid precipitate or a foam. Concrete cracks as narrow as 0.002" can be filled with chemical grout. However, they have disadvantages: the high degree of skill needed for satisfactory use, their lack of strength and the requirement that the grout does not dry out in service.

Drypack Mortar

Drypacking is the hand placement of a low-water content mortar followed by tamping or ramming of the mortar into place, producing tight contact between the mortar and the existing concrete. There is little shrinkage and the patch remains tight with good durability, strength and watertightness. Drypack is used for the repair of dormant cracks, but is not recommended for filling or repairing active cracks.

Before making a drypack repair, widen the crack at the surface to a slot about 1" wide and 1" deep. A power-driven sawtooth bit works well for this. Clean and dry the slot thoroughly. Then, apply a bond coat consisting of a cement slurry or equal quantities of cement and fine sand mixed with water to a fluid paste consistency. Follow immediately with the dry pack mortar.

To finish the mortar, lay the flat side of a hardwood piece against it and strike several times with a hammer. Surface appearance may be improved by a few light strokes with a moist rag or sponge float. Cure by applying a curing compound or supporting a strip of folded wet burlap along the length of the crack.

DIRECTORY OF APPENDICES

97 APPENDIX A: SOURCES/REFERENCES
97 Building and Safety Codes
97 Industry-related Associations
97 Government Agencies
97 Books, Periodicals, References

99 APPENDIX B: IMPORTANT PHONE NUMBERS

100 APPENDIX C: STATE EMERGENCY RESPONSE COMMISSIONS

102 APPENDIX D: STATE CONTROL OFFICIAL

105 APPENDIX E: STATE EXTENSION PROGRAM LEADERS/ COORDINATORS
105 Pesticide Chemicals Education Safety and Training

107 APPENDIX F: EPA REGIONAL OFFICES

108 APPENDIX G: OSHA REGIONAL OFFICES
108 Agricultural Outreach Coordinator

109 APPENDIX H: CHEMICAL COMPATIBILITY FOR LIQUID FERTILIZERS

110 APPENDIX I: CONSTRUCTION MATERIAL COMPATIBILITY BETWEEN CONTAINERS AND APPURTENANCES

111 APPENDIX J: BULK CHEMICALS ENGINEERING DATA

112 APPENDIX K: GLOSSARY
112 Acronyms
112 Terms

APPENDIX A: SOURCES/REFERENCES

Building and Safety Codes

BOCA: Building Official & Code Administrators
4051 W Flossmoor Rd
Country Club Hills IL 60478-5795
(708) 799-2300

FM: Factory Mutual Engineering Division
1151 Boston-Providence Turnpike
Norwood MA 02062
(617) 762-4300

SBC: Standard Building Code
Southern Building Code Congress, International
900 Montclair Rd
Birmingham AL 35213
(205) 591-1853

UBC: Uniform Building Code
International Conference of Building Officials
5360 South Workman Mill Rd
Whittier CA 90601
(310) 699-0124

UFC: Uniform Fire Code
International Conference of Building Officials and Western Fire Chiefs Association
5360 South Workman Mill Rd
Whittier CA 90601
(310) 699-0124

U.L.: Underwriters Laboratories
333 Pfingsten Rd
Northbrook IL 60062
(312) 272-8800

NFPA: National Fire Protection Association
Batterymarch Park
Quincy MA 02269
(617) 770-3000

Contact city, township, county and/or state officials for state and local zoning regulations and building codes.

Industry-related Associations

ACE: Agriculture for a Clean Environment
339 Consort Dr
Manchester, MO 63011
(314) 256-4900

ACRE: Alliance for a Clean Rural Environment
PO Box 413708
Kansas City MO 64179-0386
(800) 545-5410

American Trucking Association
Alexandria VA 22314-4677
(703) 838-1754

CAER: Community Awareness & Emergency Response
Chemical Manufacturers Association
2501 M St NW
Washington DC 22037
(202) 887-1100

CHEMTREC: Chemical Transportation Emergency Center
Chemical Manufacturers Association
2501 M St NW
Washington DC 20037
(202) 887-1255

NACA: National Agricultural Chemicals Association
1155 15th St NW
Suite 900
Washington DC 20005
(202) 296-1585

NARA: National AgriChemical Retailers Association
1155 15th St NW
Suite 900
Washington DC 20005
(202) 457-0825

NFSA: National Fertilizer Solutions Association
339 Consort Dr
Manchester MO 63011
(314) 256-4900

Southern Agricultural Chemicals Association
PO Box 686
Dawson GA 31742
(912) 995-2125

Government Agencies

DOT: U.S. Department of Transportation
Nassif Bldg
400 Seventh St, SW
Washington DC 20590
(202) 366-5580

FDA: U.S. Food and Drug Administration
Office of Health Affairs
14-95 Parklawn Bldg
5600 Fishers Lane
Rockville MD 20857
(301) 443-6143

LEPC: Local Emergency Planning Committee
State and regional response information can be obtained from your state ag chemical association or from your regional EPA office.

LEPD: Local Emergency Planning District

Mine Safety and Health Administration
4015 Wilson Blvd Rm 622
Arlington VA 22203
(703) 235-1385

NIOSH: National Institute of Occupational Safety & Health
(research branch of OSHA)
4676 Columbia Parkway
Cincinnati OH 45226
(800) 356-4674

OSHA: Occupational Safety & Health Administration
Office of Compliance Programming
US Dept of Labor
200 Constitution Ave NW
Rm N3608
Washington DC 20210
(202) 523-8041

SERC: State Emergency Response Commission
See Appendix C.

TVA: Tennessee Valley Authority
National Fertilizer and Environmental Research Center
PO Box 1010
Muscle Shoals AL 35660-1010
(205) 386-2601

Books, Periodicals, References

Agrichemical Dealership—Site Assessment and Remediation
Proceedings of Information Exchange Meeting
November 1-2, 1990 Memphis TN
National AgriChemical Retailers Association
Chris Myrick, Editor
1155 15th Street NW, Suite 900
Washington DC 20005
(202) 457-0825

Specifications for Ready-mixed Concrete, ASTM C94-86
American Society for Testing and Materials (ASTM)
1916 Race St
Philadelphia PA 19103
(215) 299-5400

Publications available from Concrete Construction Publications, Inc.:
Concrete Construction Annual Reference Guide
Cracks in Concrete: Causes and Prevention
Concrete Construction Publications, Inc
426 S Westgate
Addison IL 60101
(312) 543-0870

Crop Protection Chemicals Reference
Chemical & Pharmaceutical Press
John Wiley & Sons, Inc
605 Third Ave
New York NY 10157-0228
(212) 850-6000

DETAIL: Dealer Environmental Training and Information Library
To order materials:
6008 N Linbergh Blvd
St Louis MO 63167
(800) 8DE-TAIL

For general information:
800 N Linbergh Blvd
St Louis MO 63042
(314) 694-2789

Books, Periodicals and References, continued.

Farm Chemicals Handbook
Meister Publishing Co
37733 Euclid Ave
Willoughby OH 44094
(216) 942-2000

Farm and Home Concrete Handbook
MWPS-35
MidWest Plan Service
122 Davidson Hall
Iowa State University
Ames IA 50011-3080
(515) 294-4337

Publications available from the Portland Cement Association:

PCA Soil Primer, EB007, 1973

Design of Heavy Industrial Concrete Pavements, IS234, 1988

Effects of Substances on Concrete and Guide to Protective Treatments, IS001, 1989

Subgrades and Subbases for Concrete Pavements, ISO29, Revised 1986

Maintenance of Joints and Cracks in Concrete Pavement, IS188, 1976

Slab Thickness Design for Industrial Concrete Floors on Grade, IS195, 1976

Notes on ACI 318-89 Building Code Requirements for Reinforced Concrete with Design Applications, EB070, 1990

Concrete Floors on Ground, EB075, Revised 1990

Portland Cement Association (PCA)
5420 Old Orchard Road
Skokie IL 60077-1083
(708) 966-9559

USDOT Emergency Response Guidebook
(DOT 5800.5)
J.J. Keller & Associates, Inc
145 W Wisconsin Ave
PO Box 368
Neenah WI 54957-0368
(414) 722-2848

APPENDIX B: IMPORTANT PHONE NUMBERS

EPA National Response Center ..... (800) 424-8802

EPA Hazardous Waste Hotline ..... (800) 424-9346

EPA Safe Drinking Water Hotline ..... (800) 426-4791

National Pesticides Telecommunications Network ..... (800) 858-7378

Disposal of Hazardous Pesticides ..... (703)-557-7400

Chemicals Referral Center ..... (800) 262-8200

CHEMTREC Emergency Hotline* ..... (800) 424-9300
(Chemical Emergency ONLY)

EPA Regional Offices:
- Atlanta ..... (404) 347-3004
- Kansas City ..... (913) 551-7003
- Boston ..... (617) 565-3715
- New York ..... (212) 264-2525
- Chicago ..... (312) 353-2000
- Philadelphia ..... (215) 597-9370
- Dallas ..... (214) 655-6444
- San Francisco ..... (415) 744-2000
- Denver ..... (303) 293-1692
- Seattle ..... (206) 442-5810

Local fire department ..... 911 (usually)

Local police, sheriff, or highway patrol ..... 911 (usually)

Local emergency planning committee chair** ..... _____

State Department of Environmental Control** ..... _____

State Emergency Response Agency** ..... _____

EPA Community Right-to-Know Hotline ..... (800) 535-0202

*Chemtrec will provide spilled product manufacturer.

**State and regional response information can be obtained from your state ag chemical association or from your regional EPA office.

APPENDIX C: STATE EMERGENCY RESPONSE COMMISSIONS

Alabama
Alabama Emergency Response Commission
Dept. of Environmental Management
1751 Federal Dr.
Montgomery AL 36109
(205) 271-7700

Alaska
Alaska Emergency Response Commission
P.O. Box 0
Juneau AK 99811
(907) 465-2600

American Samoa
Territorial Emergency Management Coordination Office
American Samoan Government
Pago Pago AS 96799
International # (684) 633-2331

Arizona
Arizona Emergency Response Commission
Division of Emergency Services
5636 East McDowell Road
Phoenix AZ 85008
(602) 244-0504

Arkansas
Arkansas Hazardous Materials Emergency Response Commission
P.O. Box 9583
8001 National Drive
Little Rock AR 72219
(501) 562-7444

California
California Emergency Response Commission
Office of Emergency Services
2800 Meadowview Road
Sacramento CA 95832
(916) 427-4201

Colorado
Colorado Emergency Planning and Community Right-to-Know Commission
Division of Disaster Emergency Services
Camp George West
Golden CO 80401
(303) 273-1624

Commonwealth of Northern Mariana Islands
Office of the Governor CNMI
Saipan CNMI 96950
International # (670) 322-9529

Connecticut
Connecticut Emergency Response Commission
Dept. of Environmental Protection
State Capitol Building
Room 161
165 Capitol Avenue
Hartford CT 06106
(203) 566-4017

Delaware
Delaware Commission on Hazardous Materials
Dept. of Public Safety
Administration Center
Dover DE 19901
(302) 834-4531 or (302) 736-4321

District of Columbia
Office of Emergency Preparedness
2000 14th Street NW 8th Floor
Washington DC 20009
(202) 727-6161

Florida
Florida Emergency Response Commission
Florida Dept. of Community Affairs
2740 Centerview Drive
Tallahassee FL 32399
(904) 487-4915

Georgia
Georgia Emergency Response Commission
Georgia Dept. of Natural Resources
205 Butler Street SE
Floyd Towers East
Atlanta GA 30334
(404) 656-4713

Guam
Civil Defense
Emergency Services Office
Government of Guam
P.O. Box 2877
Aguana GU 96910
FTS 550-7230

Hawaii
Hawaii Emergency Response Commission
Hawaii Dept. of Health
Environmental Epidemiology Program
P.O. Box 3378
Honolulu HI 96801
(808) 548-2076 or (808) 548-5832

Idaho
Idaho Emergency Response Commission
Dept. of Health & Welfare
State House
Boise Idaho 83720
(208) 334-5898

Illinois
Illinois Emergency Response Commission
Illinois Emergency Services & Disaster Agency
Attn: Hazmat Section
110 E. Adams Street
Springfield IL 62706
(217) 782-4694

Indiana
Indiana Dept. of Environmental Management
Emergency Response Branch
5500 West Bradbury Street
Indianapolis IN 46241
(317) 243-5176

Iowa
Iowa Emergency Response Commission
301 East 7th Street
Des Moines IA 50319
(515) 281-6175

Kansas
State Emergency Response Commission
Kansas Dept. of Health and Environment
Forbes Field Building 728
Topeka KS 66620
(913) 296-1690

Kentucky
Kentucky Emergency Response Commission
Kentucky Disaster and Emergency Services
Boone National Guard Center
Frankfort KY 40601
(502) 564-8682

Louisiana
Louisiana Emergency Response Commission
Dept. of Public Safety & Correction
Office of Public Safety
P.O. Box 66614
Baton Rouge LA 70896
(504) 925-6117

Maine
Bureau of Labor Standards
Attn: SARA
State Office Building
Station 82
Augusta ME 04333
(207) 289-4291

Maryland
Governor's Management Advisory Council
Maryland Emergency Management & Civil Defense
2 Sudbrook Lane East
East Pikesville MD 21208
(301) 486-4422

Massachusetts
Title Three Emergency Response Commission
Dept. of Environmental Quality Engineering
One Winter Street
Boston MA 02108
SERC: (617) 292-5851
LEPC: (617) 875-1381

Michigan
Michigan Dept. of Natural Resources
Environmental Response Division
Title III Notification
P.O. Box 30028
Lansing MI 48909
(517) 373-9893

Minnesota
Minnesota Emergency Response Commission
Division of Emergency Services
State Capitol Room B-5
St. Paul MN 55155
(612) 296-2233

Mississippi
Mississippi Emergency Response Commission
Mississippi Emergency Management Agency
P.O. Box 4501
Fondren Station
Jackson MS 39216-0501
(601) 352-9100

Missouri
Missouri Emergency Response Commission
Missouri Dept. of Natural Resources
P.O. Box 3133
Jefferson City MO 65102
(314) 751-7929

Montana
Montana Emergency Response Commission
Environmental Sciences Division
Dept. of Health & Environmental Sciences
Cogswell Building A-107
Helena MT 59620
(406) 444-3948

Nebraska
Nebraska Emergency Response Commission
Nebraska Dept. of Environmental Control
Technical Services Section
P.O. Box 94877
State House Station
Lincoln NE 68509
(402) 471-4230

Nevada
Nevada Division of Emergency Management
2525 South Carson Street
Carson City NV 89710
(702) 885-4240 or (702) 885-5300

New Hampshire
State Emergency Management Agency
State Office Park South
107 Pleasant Street
Concord NH 03301
(603) 271-2231

New Jersey
New Jersey Emergency Response Commission
SARA Title III Project
Dept. of Environmental Quality
CN-402
Trenton NJ 08625
(609) 292-6714

New Mexico
New Mexico Emergency Response Commission
New Mexico Dept. of Public Safety
P.O. Box 1628
Santa Fe NM 87504-1628
(505) 827-9226

New York
New York Emergency Response Commission
New York State Dept. of Environmental Conservation
Bureau of Spill Prevention & Response
50 Wolf Road Room 326
Albany NY 12233-3510
(518) 457-4107

North Carolina
North Carolina Emergency Response Commission
Division of Emergency Management
North Carolina Dept. of Crime Control and Public Safety
116 West Jones Street
Raleigh NC 27611
(919) 733-2126

North Dakota
North Dakota State Dept. of Health
1200 Missouri Avenue
P.O. Box 5520
Bismarck ND 58502-5520
(701) 224-2370

Ohio
Ohio Emergency Response Commission
Ohio Environmental Protection Agency
Office of Emergency Response
P.O. Box 1049
Columbus OH 43266-0149
(614) 481-4300

Oklahoma
Oklahoma Emergency Response Commission
Office of Civil Defense
P.O. Box 53365
Oklahoma City OK 73152
(405) 521-2481

Oregon
Oregon Emergency Response Commission
c/o State Fire Marshall
3000 Market Street Plaza
Suite 534
Salem OR 97310
(503) 378-2885

Pennsylvania
Pennsylvania Emergency Response Commission
SARA Title III Officer
PEMA Response & Recovery
P.O. Box 3321
Harrisburg PA 17105
(717) 783-8150

Puerto Rico
Puerto Rico Emergency Response Commission
Environmental Quality Board
P.O. Box 11488
Santurce PR 00908
(809) 722-1175 or (809) 722-2173

Rhode Island
Rhode Island Emergency Response Commission
Rhode Island Emergency Management Agency
State House M. 27
Providence RI 02903
(401) 421-7333

South Carolina
South Carolina Emergency Response Commission
Division of Public Safety Programs
Office of the Governor
1205 Pendleton Street
Columbia SC 29201
(803) 734-0425

South Dakota
South Dakota Emergency Response Commission
Dept. of Water & Natural Resources
Joe Foss Building
523 East Capitol
Pierre SD 57501-3181
(605) 773-3151

Tennessee
Tennessee Emergency Response Commission
Tennessee Emergency Management Agency
3041 Sidco Drive
Nashville TN 37204
(615) 252-3300
(800) 258-3300

Texas
Texas Emergency Response Commission
Division of Emergency Management
5808 Lamar
Austin TX 74752
(512) 465-2138

Utah
Utah Hazardous Chemical Emergency Response Commission
Dept. of Health
288 North 1460 West
P.O. Box 16690
Salt Lake City UT 84116-0690
(801) 538-6101

Vermont
Dept. of Labor and Industry
120 State Street
Montpelier VT 05002
(802) 828-2286

Virgin Islands
U.S. Virgin Islands Emergency Response Commission
Dept of Planning and Natural Resources
Nisky Center Suite 231
St Thomas VI 00802
(809) 774-3320 Ext. 169 or 170

Virginia
Virginia Emergency Response Council
Dept. of Waste Management
James Monroe Building
11th Floor
101 North 14th Street
Richmond VA 23219
(804) 225-2999

Washington
Washington Emergency Response Commission
Division of Emergency Management
4220 East Martin Way Mailstop PT-11
Olympia WA 98504
(206) 753-5255

West Virginia
West Virginia Emergency Response Commission
Director Dept. of Natural Resources
Capitol Building Room 669
1800 Washington Street East
Charleston WV 25305
(304) 348-2754

Wisconsin
Division of Emergency Governor
4802 Sheboygan Avenue
Room 99A
P.O. Box 7865
Madison WI 53707
(608) 266-3232

Wyoming
Wyoming Emergency Management Agency
Comprehensive Emergency Management
5500 Bishop Boulevard
P.O. Box 1709
Cheyenne WY 82003
(307) 777-7566

APPENDIX D: STATE CONTROL OFFICIAL

Alabama
Supervisor—Fertilizer
Ag Commodity Inspection
(205) 242-2631

Director—Pesticide
Ag Chemistry/Plant Industry Div.
AL Dept. of Agriculture & Industry
P.O. Box 3336—1445 Federal Dr.
Montgomery AL 36193
(205) 242-2631

Alaska
Supervisor—Fertilizer
AK Dept. of Natural Resources
Div. of Agriculture
P.O. Box 949
Palmer AK 99645-0949
(907) 745-7200

Supervisor—Pesticide
Environmental Health
Dept. of Environmental Conservation
Pouch O
Juneau AK 99811
(907) 465-2696

Arizona
State Chemist
Fertilizer & Pesticide
Office of State Chemist
State Agricultural Laboratory
P.O. Box 1586
Mesa AZ 85211
(602) 833-5442

Arkansas
Director—Fertilizer & Pesticide
Div. of Feeds Fertilizer & Pesticides
AR State Plant Board
P.O. Box 1069
Little Rock AR 72203
(501) 225-1598

California
Director—Fertilizer
(916) 322-5820

Associate Director—Pesticide
CA Dept. of Food & Agriculture
1220 N. Street Room A-372
Sacramento CA 95814
(906) 322-6315

Colorado
Fertilizer Program
Program Administrator
CO Dept. of Agriculture
2331 West 31st Ave.
Denver CO 80211
(303) 866-2835

Director—Pesticide
CO Dept. of Agriculture
4th Floor 1525 Sherman St.
Denver CO 80203
(303) 866-2838

Connecticut
Director—Fertilizer
Marketing Div.
CT Dept. of Agriculture
State Office Building
Hartford CT 06106
(203) 566-4276

Director—Pesticide
Hazardous Materials Management Unit
Dept. of Environmental Protection
State Office Building
Hartford CT 06106
(203) 566-8476

Delaware
State Chemist—Fertilizer
Div. of Standard & Inspection
(302) 736-4811

Pesticide Compliance Supervisor
DE Dept. of Agriculture
2320 South DuPont Highway
Dover DE 19901
(302) 736-4811

Florida
Director—Fertilizer & Pesticide
Feed Seed & Fertilizer Bureau
Inspection Div.
FL Dept. of Agriculture &
Consumer Services
3125 Conner Blvd.
Tallahassee FL 32399-0800
(904) 488-3731

Georgia
Div. Director—Fertilizer
Plant Food Feed & Grain Div.
(404) 656-3637

Asst. Commissioner—Pesticide
Entomology & Pesticide Div.
GA Dept. of Agriculture
Capitol Square
Atlanta GA 30334
(404) 656-4958

Hawaii
Program Manager—Pesticide
Plant Industry Div.
HI Dept. of Agriculture
1428 South King St.
Honolulu HI 96814
(808) 548-7124

Idaho
Chief—Fertilizer
(208) 334-3413

Chief—Pesticide
ID Dept. of Agriculture
P.O. Box 790
Boise ID 83701-0790
(208) 334-3243

Illinois
Bureau Chief—Fertilizer
Bureau of Products
Inspection & Standards
(217) 785-8300

Bureau Chief—Pesticide
Bureau of Plant & Apiary Protection
IL Dept. of Agriculture
State Fairgrounds
P.O. Box 19281
Springfield IL 62794-9281
(207) 785-2427

Indiana
Fertilizer & Pesticide
State Chemist
Dept. of Biochemistry
Purdue University
West Lafayette IN 49707
(317) 494-1492

Iowa
Supervisor—Fertilizer
(515) 281-5993

Pesticide Division
Secretary of Agriculture
IA Dept. of Agriculture
Henry Wallace Building
Des Moines IA 50319
(515) 281-8590

Kansas
Administrative Asst.—Fertilizer
(913) 296-3511

Director—Pesticide
KS State Board of Agriculture
109 SW 9th St.
Topeka KS 66612-1281
(913) 296-2263

Kentucky
Director—Fertilizer
University of KY
College of Agriculture
103 Regulatory Services Bldg
Lexington KY 40546-0275
(606) 257-2827

Ag Prog. Coordinator Pesticide
KY Dept. of Agriculture
700 Capitol Plaza Tower
Frankfort KY 40601
(502) 564-7274

Louisiana
Director—Fertilizer
Div. of Ag Chemistry
LA Dept. of Agriculture
P.O. Box 25060
Baton Rouge LA 70894-5060
(504) 342-5812

Director—Pesticide
LA Dept. of Ag & Forestry
P.O. Box 3596
Baton Rouge LA 70821-3596
(504) 925-3763

Maine
Supervisor—Fertilizer
(207) 289-3841

Director—Pesticide
ME Dept. of Agriculture
State House Station #28
Augusta ME 04333
(207) 289-2731

Maryland
Chief—Fertilizer
State Chemist Section
MD Dept. of Agriculture
50 Harry S. Truman Parkway
Annapolis MD 21401
(301) 841-2721

Chief—Pesticide
MD Dept. of Agriculture
50 Harry S. Truman Parkway
Annapolis MD 21401
(301) 841-5870

Massachusetts
Chief—Fertilizer
Feed & Fertilizer Control
West Experiment Station
Univ. of Massachusetts
Amherst MA 01002
(617) 727-3026

Chief—Pesticide
100 Cambridge St. 21st Floor
Boston MA 02202
(617) 727-3020

Michigan
Manager—Fertilizer
Ag Products Program
Pesticide & Plant Pest Mgmt. Div.
(517) 373-1087

Director—Pesticide
MI Dept. of Agriculture
P.O. Box 30017
Lansing MI 48909
(517) 373-1087

Minnesota
Operations Manager—Fertilizer
Div. of Agronomy Services
(612) 296-3016

Director—Pesticide
MN Dept. of Agriculture
90 West Plato Blvd.
St. Paul MN 55107
(612) 297-2261

Mississippi
Director—Fertilizer
Regulatory Services Bureau
(601) 354-7063

Pesticide Division
State Entomologist Director
Div. of Plant Industry
MS Dept. of Agriculture & Commerce
P.O. Box 1609
Jackson MS 39215-1609
(601) 325-3390

State Chemist—Pesticide
MS State Chemical Laboratory
Box CR
Mississippi State MS 39762
(601) 325-7806

Missouri
Manager—Fertilizer
Fertilizer Control Service
Bldg. T-14
MO Agricultural Experiment Station
University of Missouri
Columbia MO 65211
(314) 882-4891

Director—Pesticide
MO Dept. of Agriculture
P.O. Box 630
Jefferson City MO 65102-0630
(314) 751-2462

Montana
Administrator—Fertilizer
(406) 444-3730

Administrator—Pesticide
MT Dept. of Agriculture
Capitol Station
Helena MT 59620-0205
(406) 444-2944

Nebraska
Supervisor—Fertilizer
Feed Fertilizer Section & Ag Lime
(402) 471-2394

Director—Pesticide
Bureau of Plant Industry
NE Dept. of Agriculture
301 Centennial Mall
Lincoln NE 68509
(402) 471-2341

Nevada
Chief Chemist
Fertilizer & Pesticide
NV Dept. of Agriculture
350 Capitol Hill Ave.
P.O. Box 11100
Reno NV 89510-1100
(702) 789-0180

New Hampshire
Director—Fertilizer
Bureau of Markets
(603) 271-3685

Director—Pesticide
NH Dept. of Agriculture
Caller Box 2042
Concord NH 03302-2042
(603) 271-3550

New Jersey
State Chemist—Fertilizer
NJ Dept. of Agriculture
CN-330
Trenton NJ 08625
(609) 984-2222

Director—Pesticide
NJ Dept. of Environmental Protection
401 East State St.
Trenton NJ 08625
(609) 292-5383

New Mexico
Bureau Chief—Fertilizer
(505) 646-3107

Pesticide
Div. of Agriculture &
Environmental Services
NM Dept. of Agriculture
P.O. Box 30005 Dept. 3150
Las Cruces NM 88003-0005
(505) 646-3208

New York
Director—Fertilizer
Div. of Plant Industry
NY Dept. of Agriculture & Markets
1 Winners Circle Capital Plaza
Albany NY 12235
(518) 457-2087

Director—Pesticide
NY Dept. of Environmental Conservation
50 Wolf Road Room 404
Albany NY 12233-7254
(518) 457-7482

North Carolina
Administrator—Fertilizer
Plant Industry Division
(919) 733-3930

Administrator—Pesticide
Food & Drug Protection Division
NC Dept. of Agriculture
P.O. Box 27647
Raleigh NC 27611-0647
(919) 733-3556

North Dakota
Director—Fertilizer & Pesticide
ND State Dept. of Health &
Consolidated Laboratories
P.O. Box 937
Bismarck ND 58502
(701) 221-6149

Ohio
Specialist in Charge—Fertilizer
Div. of Plant Industry
Feed & Fertilizer Section
OH Dept. of Ag
Reynoldsburg OH 43068
(614) 866-6361

Specialist in Charge—Pesticide
Pesticide Regulation
Div. of Plant Industry
8995 East Main St.
Reynoldsburg OH 43068-3399
(614) 866-6361

Oklahoma
Director—Fertilizer & Pesticide
Div. of Plant Industry
OK Dept. of Agriculture
2800 North Lincoln Blvd.
Oklahoma City OK 73105-4298
(405) 521-3864

Oregon
Administrator
Fertilizer & Pesticide
OR Dept. of Agriculture
635 Capitol St. NE
Salem OR 97310
(503) 378-3776

Pennsylvania
Chief—Fertilizer & Pesticide
Div. of Agronomic Services
PA Dept. of Agriculture
2301 North Cameron St.
Harrisburg PA 17110-9408
(717) 787-4843

Rhode Island
Chief—Fertilizer & Pesticide
RI Dept. of Environmental Management
22 Hayes Street
Providence RI 02908
(401) 277-2781

South Carolina
Head—Fertilizer
Fertilizer & Pesticide Control
256 Poole Agricultural Center
Clemson University
Clemson SC 29631
(803) 656-3171

Director—Pesticide
Regulatory & Public Services
Programs Div.
214 Barre Hall
Clemson University
Clemson SC 29634-2775
(803) 656-3005

South Dakota
Administrator
Fertilizer & Pesticide
Feed Fertilizer & Pesticide Program
Div. of Regulatory Services
SD Dept. of Agriculture
Anderson Building 445 East Capitol
Pierre SD 57501-3188
(605) 773-3724

Tennessee
Director—Fertilizer
Div. of Plant Industries
(615) 360-0150

Asst. Director—Pesticide
TN Dept. of Agriculture
P.O. Box 40627 Melrose Station
Nashville TN 37204
(615) 360-0130

Texas
Chief—Fertilizer
Office of TX State Chemist
P.O. Drawer 3160
Texas A & M University
College Station TX 77841
(409) 845-1121

Director—Pesticide
TX Dept. of Agriculture
P.O. Box 12847
Austin TX 78711
(512) 463-7526

Utah
Director—Fertilizer & Pesticide
Div. of Plant Industry
UT Dept. of Agriculture
350 North Redwood Rd.
Salt Lake City UT 84116
(801) 538-7180

Vermont
Director—Fertilizer & Pesticide
Plant Industry Lab. & Standards
VT Dept. of Agriculture
116 State Street
Montpelier VT 05602
(802) 828-2431

Virginia
Supervisor—Fertilizer
(804) 786-3523

Supervisor—Pesticide
VA Dept. of Agriculture &
Consumer Service
P.O. Box 1163
Richmond VA 23209
(804) 786-3798

Washington
Supervisor—Fertilizer
(206) 753-5064

Asst. Director—Pesticide
WA Dept. of Agriculture—AX 41
406 General Administration Bldg.
Olympia WA 98504
(206) 753-5062

West Virginia
Registration Specialist—Fertilizer
(304) 348-2201

Director—Pesticide
WV Dept. of Agriculture
Capitol Complex—Guthrie Center
Charleston WV 25305
(304) 348-2209

Wisconsin
Director—Fertilizer
(608) 266-4509

Director—Pesticide
Ag Resource Mgt. Div.
WI Dept. of Agriculture
Trade & Consumer Protection
801 W. Badger Road
P.O. Box 8911
Madison WI 53708
(608) 266-7131

Wyoming
Director—Fertilizer & Pesticide
Technical Services Section
Div. of Standards & Consumer Services
WY Dept. of Agriculture
2219 Carey Ave.
Cheyenne WY 82002
(307) 777-6590

Puerto Rico
Director—Fertilizer & Pesticide
Analysis & Registration of
Agricultural Materials
PR Dept. of Agriculture
P.O. Box 10163
Santurce PR 00908
(809) 796-1710

Virgin Islands
Director—Fertilizer & Pesticide
Dept. of Conservation &
Cultural Affairs
P.O. Box 4340
St. Thomas VI 00801
(809) 774-6420

Canada
Director General—Fertilizer
Feed & Fertilizer Div.
Plant Health & Plant Products
Directorate
960 Carling Avenue
K.W. Neatby Building 1st Floor
Central Experimental Plaza
Ottawa ONT
K1A 0C6 CANADA
(613) 992-2114

Director—Pesticide
Agriculture Canada 2323 Riverside Dr.
2nd Floor SBI Building
960 Carling Ave.
Ottawa ONT
K1R 0C6 CANADA
(613) 993-4544

APPENDIX E:
STATE EXTENSION PROGRAM LEADERS/COORDINATORS
Pesticide Chemicals Education Safety and Training

Alabama
Pesticide Education Specialist
208A Extension Hall
Auburn University AL 36849
(205) 844-6396

Alaska
Horticulture Specialist Pesticide Coordinator
Cooperative Extension Service
2221 E. Northern Lights Blvd. #240
Anchorage AK 99508
(907) 279-6575

American Samoa
American Samoa Community College
Land Grant Program
Mapusaga Campus
P.O. Box 2609
Pago Pago AS 96779
011 (684) 699-1394

Arizona
Pesticide Coordinator
University of Arizona
1109 E. Helen Street
Tucson AZ 85719
(602) 621-4012

Arkansas
Cooperative Extension Service
P.O. Box 391
Little Rock AR 72203
(501) 373-2640

California
Pesticide Training Coordinator
IPM Education and Publications
University of California
Davis CA 95616
(916) 752-7011

Colorado
Coordinator Pesticide Programs
116 Weed Science Bldg.
Colorado State University
Fort Collins CO 80523
(303) 491-5237

Connecticut
Pesticide Coordinator
1800 Asylum Avenue
West Hartford CT 06117
(203) 241-4940

Delaware
Pesticide Coordinator
Townsend Hall/Room 248
University of Delaware
Newark DE 19711-1303
(302) 451-2526

District of Columbia
Coordinator
Cooperative Extension Service
University of D.C.
901 Newton Street NE
Washington DC 20017
(202) 576-7419

Florida
Pesticide Coordinator
University of Florida
Building 847
Gainesville FL 32611
(904) 392-4721

Georgia
Coordinator PAT
Cooperative Extension Service
Barrow Hall
University of Georgia
Athens GA 30602
(404) 542-3685

Guam
Pesticide Coordinator
College of Agriculture
University of Guam
Mangilao GU 96923
FTS Phone: 011 (671) 734-2518

Hawaii
Ext. Specialist—Pesticide Chemicals
Dept. of Agriculture Biochemistry
University of Hawaii
1800 East-West Road
Honolulu HI 96822
(808) 948-8352

Idaho
Pesticide Coordinator
Dept. of Plant Soil & Entomology Sciences
University of Idaho
Moscow ID 83843
(208) 885-7541

Illinois
University of Illinois
360-L Agriculture Engineering Science Bldg.
1304 W. Pennsylvania Ave.
Urbana IL 61801
(217) 333-3000

Indiana
Pesticide Coordinator
Purdue Pesticide Programs
Room G316
Lilly Hall of Life Sciences
West Lafayette IN 47907
(317) 494-4566

Iowa
Extension Entomologist
Pest Applicator Trng. Coordinator
109 Insectary Building
Iowa State University
Ames IA 50011
(515) 294-1101

Kansas
Extension Pesticide Coordinator
Department of Entomology
Waters Hall
Kansas State University
Manhattan KS 66506
(913) 532-5891

Kentucky
Coordinator PAT
University of Kentucky
Department of Entomology
S225 Ag. Science Center N
Lexington KY 40546-0091
(606) 257-7455

Louisiana
Pesticide Chemicals Coordinator
Cooperative Extension Service
Knapp Hall
Louisiana State University
Baton Rouge LA 70803
(504) 388-2180

Maine
Pest Management Specialist
UMCES-Pest Management Office
491 College Avenue
Orono ME 04473
(207) 581-3879

Maryland
Pesticide Coordinator
Department of Entomology
University of Maryland
College Park MD 20742
(301) 454-7127

Massachusetts
Coordinator—Pesticides Program
Department of Entomology
Fernald Hall
University of Massachusetts
Amherst MA 01003
(413) 545-2283

Michigan
Pesticide Education Coordinator
Room 11 Agriculture Hall
Michigan State University
East Lansing MI 48824-1039
(517) 355-0117

Minnesota
Asst. Extension Agriculturalist
Plant Pathology Department
495 Borlaug Hall
1991 Buford Circle
University of Minnesota
St. Paul MN 55108
(612) 625-6290

Mississippi
Pesticide Coordinator
100% Ext. Pesticide Education
P.O. Box 5446
Mississippi State MS 39762
(601) 325-2085

Missouri
PAT Coordinator
University of Missouri
I-87 Agriculture Building
Columbia MO 65211
(314) 882-7181

Montana
Pesticide Education Specialist
Entomology Research Laboratory
Montana State University
Bozeman MT 59717
(406) 994-3518

Nebraska
Extension Pesticide Coordinator
101 Natural Resources Hall
University of Nebraska
Lincoln NE 68583-0818
(402) 472-1632

Nevada
Extension IPM/Pesticide Specialist
Plant Science Department
University of Nevada-Reno
Reno NV 89557-0107
(702) 784-6911

New Hampshire
Pesticide Coordinator
University of New Hampshire
Nesmith Hall
Durham NH 03824
(603) 862-1159

New Jersey
Extension Pesticide Coordinator
Rutgers University
J.B. Smith Hall Room 108
P.O. Box 231
New Brunswick NJ 08903
(201) 932-9801

New Mexico
Coordinator
Pesticide Chemicals & Entomology
Box 3AE
New Mexico State University
Las Cruces NM 88003
(505) 646-2546

New York
Director Chemicals—Pesticides Program
5123 Comstock Hall
Cornell University
Ithaca NY 14853
(607) 255-3283

North Carolina
Pesticide Coordinator
Dept. of Horticultural Science
North Carolina State University
Box 7609
Raleigh NC 27695-7609
(919) 737-3113

North Dakota
Pesticide Program Coordinator
NDSU Pesticide Programs
North Dakota State University
P.O. Box 5658
Fargo ND 58105
(701) 237-7180

Ohio
Pesticide Coordinator
Extension Entomology
Ohio State University
1991 Kenny Road
Columbus OH 43210-1090

Oklahoma
Pesticide Program Specialist
Department of Entomology
Oklahoma State University
501 Life Science West
Stillwater OK 74078
(405) 744-5531

Oregon
Pesticide Applicator Training
Dept. of Agricultural Chemistry
Oregon State University
Corvallis OR 97331
(503) 754-2906

Pennsylvania
Pesticide Coordinator
417 Agricultural Administration Bldg.
Pennsylvania State University
University Park PA 16802
(814) 863-0263

Puerto Rico
State Pesticide Training Coordinator
College of Agricultural Sciences
Mayaguez Campus
University of Puerto Rico
Mayaguez PR 00708
(809) 832-4040 Ext. 3481

Rhode Island
Pesticide Coordinator
Woodward Hall
Plant Science Department
University of Rhode Island
Kingston RI 02881
(401) 792-5998

South Carolina
Pesticide & Chemical Coordinator
Department of Entomology
103 Long Hall
Clemson University
Clemson SC 29634-0365
(803) 656-3111

South Dakota
Coordinator PAT
Agriculture Hall 152B
South Dakota State University
P.O. Box 2207A
Brookings SD 57007
(605) 688-4752

Tennessee
Pesticide Coordinator
Entomology & Plant Pathology Section
University of Tennessee
P.O. Box 1071
Knoxville TN 37901
(615) 974-7137

Texas
Agricultural Chemist
115 Agronomy Field Laboratory
Texas A&M University
College Station TX 77843-2474
(409) 845-3849

Utah
Extension Pesticide Coordinator
Utah State University
Logan UT 84322-4649
(801) 750-1600

Vermont
Coordinator
Pesticide Chemicals
217 Hills Building
University of Vermont
Burlington VT 05405-0082
(802) 656-0487

Virginia
Coordinator
Chemical Drug & Pesticide Unit
Virginia Polytechnic Institute &
State University
Blacksburg VA 24061-0409
(703) 231-6543

Virgin Islands
PAT Coordinator UVI CES
Route 02 Box 10000
Kingshill VI 00850
(809) 778-0246

Washington
Extension Pesticide Education Specialist
Washington State University
7612 Pioneer Way East
Pullman WA 98371-4998
(206) 840-4577

West Virginia
Pesticide Coordinator
West Virginia University
408 Brooks Hall
Morgantown WV 26506-6057
(304) 293-3911

Wisconsin
Pesticide Coordinator
University of Wisconsin
1575 Linden Drive
Madison WI 53706
(608) 262-1392

Wyoming
Extension Pesticide Coordinator
Dept. of Plant Soil & Insect Science
Box 3354
University of Wyoming
Union Station
Laramie WY 82070
(307) 766-5381

Extension Service—USDA
Program Leader—Pesticide Education
USDA Extension Service
Room 3347—South Building
Washington DC 20250
(202) 447-6506

REGIONAL ADVISORS
North Central
Associate Dean
Iowa Cooperative Extension Service
108 Curtiss Hall
Iowa State University
Ames IA 50011
(515) 294-7801

Western
vacant

Southern
Asst. Director ANR
108 Long Hall
Clemson University
Clemson SC 29623-0310
(803) 656-3384

Northeast
Agricultural Program Leader
127 Townsend Hall
University of Delaware
Newark DE 19717-1303

APPENDIX F: EPA REGIONAL OFFICES

Region 1 (CT,ME,MA,NH,RI,VT)
John F. Kennedy Federal Bldg.
Room 2203
Boston MA 02203
(617) 565-3715

Region 2 (NJ,NY,PR,VI)
26 Federal Plaza
New York NY 10278
(212) 264-2525

Region 3 (DE,DC,MD,PA,VA,WV)
841 Chestnut Street
Philadelphia PA 19107
(215) 597-9800

Region 4 (AL,FL,GA,KY,MS,NC,SC,TN)
345 Courtland Street NE
Atlanta GA 30365
(404) 347-4727

Region 5 (IL,IN,MI,MN,OH,WI)
77 West Jackson Street
Chicago IL 60604
(312) 353-2000

Region 6 (AR,LA,NM,OK,TX)
1445 Ross Ave
Suite 1200
Dallas TX 75202
(214) 655-6444

Region 7 (IA,KS,MO,NE)
726 Minnesota Avenue
Kansas City KS 66101
(913) 236-2800

Region 8 (CO,MT,ND,SD,UT,WY)
999 18th Street
Denver CO 80202-2413
(303) 293-1603

Region 9 (AS,AZ,CA,GU,HI,NV)
75 Hawthorne
San Francisco CA 94105
(415) 744-2000

Region 10 (AK,ID,OR,WA)
1200 6th Avenue
Seattle WA 98101
(206) 442-5810

APPENDIX G: OSHA REGIONAL OFFICES

Agricultural Outreach Coordinator

Region 1 (CT,ME,MA,NH,RI,VT)
TECFAP
133 Portland Street
Boston MA 02114
(601) 565-7164

Region 2 (NJ,NY,PR)
Syracuse Area Office
100 So Clinton Street Rm 1267
Syracuse NY 13261
(315) 423-5188

Region 3 (DE,DC,MD,PA,VA,WV)
Technical Support
3535 Market Street
Gateway Building Rm 2100
Philadelphia PA 19104
(215) 596-1201

Region 4 (AL,FL,GA,KY,MS,NC,SC,TN)
Technical Support
1375 Peachtree Street NE Rm 587
Atlanta GA 30367
(404) 347-3573 or (404) 347-2856

Region 5 (IL,IN,MI,MN,OH,WI)
Regional Audit Team
230 S Dearborn Street Rm 3244
Chicago IL 60604
(301) 353-2220

Region 6 (AR,LA,NM,OK,TX)
Federal-State Operations
525 Griffin Street Rm 602
Dallas TX 75202
(214) 767-4731

Region 7 (IA,KS,MO,NE)
TECFAP
911 Walnut Street Rm 406
Kansas City MO 64106
(816) 426-5861

Region 8 (CO,MT,ND,SD,UT,WY)
Federal-State Operations
1961 Stout Street Rm 1576
Denver CO 80294
(303) 844-3061

Region 9 (AS,AZ,CA,GU,HI,NV,
Trust Territory of the Pacific Islands)
TECFAP
71 Stevenson Street Suite 420
San Francisco CA 94903
(405) 744-6670 or (405) 744-7112

Region 10 (AK,ID,OR,WA)
Deputy Regional Administrator
1111 Third Avenue Suite 715
Seattle WA 98101-3212
(206) 553-5930

APPENDIX H: CHEMICAL COMPATIBILITY FOR LIQUID FERTILIZERS[1]

Table key:
A - Acceptable if compatible with container or appurtenances.
N - Not acceptable because of chemical incompatibility.
1 - Acceptable if product is treated with corrosion inhibitor.
2 - Acceptable if warranted by equipment manufacturer for the intended use.
3 - Acceptable if cleaned after seasonal use and is used to store materials less than three months (cumulative) annually.

	Product										
Container material	**Urea ammonium nitrate**	**Aqua ammonia**	**Low pressure N**	**Ammonium thio-sulfate**	**Ammonium poly-phosphate**	**Phosphoric acid**	**Potassium phosphate**	**Potassium hydroxide**	**Potash solutions**	**Mixed fertilizers, starters**	**Acid fertilizers**
Stainless steel	A	A	A	A	A	A	A	A	A	A	A
Mild steel	1	A	N	1	A	N	N	N	3	3	N
Mild steel with liner	2	A	2	2	A	2	2	2	2	2	2
Aluminum	A	A	A	A	N	N	N	N	N	N	N
Fiberglass	A	2	N	A	A	2	A	2	A	A	2
Poly or plastic	A	2	N	A	A	2	A	2	A	A	2
Brass or copper alloys	N	N	N	N	N	N	N	N	N	N	N
Plugs, valves, tank inserts											
Stainless steel	A	A	A	A	A	A	A	A	A	A	A
Cast nickel stainless insert	A	A	A	A	A	N	A	2	A	A	N
Fully lined metal stainless insert	A	2	A	A	A	2	A	N	A	A	2
Nylon ball valve	A	2	2	A	A	N	A	A	A	A	2
Forged steel	A	A	A	A	A	N	2	N	A	A	N
Cast iron or mild steel	N	N	N	N	A	N	N	N	N	N	N
Poly or plastic	A	N	N	A	A	2	A	2	A	A	2
Brass or copper alloys	N	N	N	N	N	N	N	N	N	N	N
Plumbing											
Stainless steel	A	A	A	A	A	A	A	A	A	A	A
Forged steel	A	A	A	A	A	N	2	N	A	A	N
Cast iron or mild steel	1	1	2	1	A	N	N	N	3	3	N
Galvanized	N	N	N	N	A	N	N	N	N	3	N
PVC and other synthetics	2	2	N	2	2	N	A	2	2	2	2

[1]The acceptability of materials for the above purposes is based on recommendations from various industry sources, and is not a recommendation or endorsement by MWPS.
Source: Wisconsin Dept of Agriculture, Trade and Consumer Protection.

APPENDIX I: CONSTRUCTION MATERIAL COMPATIBILITY BETWEEN CONTAINERS AND APPURTENANCES[1]

Table key:
A - Acceptable if all materials are chemically compatible.
N - Not acceptable because of differing reactivity or strength.
1 - May be acceptable for some products, as recommended by equipment manufacturer.

	Container				
	Stainless steel	**Mild steel (also lined)**	**Aluminum**	**Fiberglass**	**Poly**
Plugs, valves, tank inserts					
Stainless steel	A	A	A	A	A
Cast nickel stainless insert	A	A	A	A	A
Fully lined metal stainless insert	N	A	A	A	A
Nylon nall valve	A	A	A	A	A
Forged steel	1	A	N	A	A
Cast iron or mild steel	N	A	N	1	A
Poly or plastic	N	N	N	1	A
Brass or copper alloys	N	N	A	1	1
Plumbing					
Stainless steel	A	A	A	A	A
Forged steel	1	A	A	A	A
Cast iron or mild steel	N	A	N	A	A
Galvanized	N	A	1	A	A
PVC and other synthetics	1	1	1	1	1

[1]The acceptability of materials for the above purposes is based on recommendations from various industry sources, and is not a recommendation or endorsement by MWPS.
Source: Wisconsin Dept of Agriculture, Trade and Consumer Protection.

APPENDIX J: BULK CHEMICALS ENGINEERING DATA[1]

Table key:
R - Recommended
X - Limited recommendation
N - Not recommended
- Not recommendation

	Product											
Viscosity	**Aatrex 4LC**	**Amiben**	**Atrazine 4L-B**	**Bicep**	**Bladex 4L-B**	**Dual 8E**	**Dyanap**	**Eradicane 6.7E**	**Lasso**	**Prowl**	**Sutan +6.7-E**	**Treflan Pro-5**
Storage tanks												
Stainless steel	R		R	R	R	R		R	R	R	R	R
Mild steel	X			X		X		R		X	R	
Coated mild steel	X		R	X	R	X		R	R	R	R	R
Aluminum	R		R	R	R	R				R		R
Fiberglass						N			N	N		N
Polyester			R		R	R			N	N		N
Polyolethylene	R			R		R			N	N		N
Pipe-fittings												
Stainless steel	R		R	R	R	R		R	R	R	R	R
Galvanized	R			R		R						
Carbon steel	X		R	X	R	X		R	R	X	R	R
PVC	N			N		N						
Fiberglass										N		N
Nylon, type 6						R						
Polypropylene[b]						R						N
Black iron												
Aluminum			R		R							R
Plastic			N		N					N		N
ABS[c]						N						
Seals, gaskets, O rings, hose												
Notrile										N		
Viton	R		R	R	R	R		R	R	R	R	R
Bunan	N			N		N				N		
Butyl										N		
Hygar										N		
Nylon										R		
Teflon	R		R	R	R	R		R	R	R	R	R
Neotrene	R			X		X				N		
Natural rubber	N			N		N				N		N
Polyethylene[a]	R			R		R				N		N
Polyproplene[b]										N		N
Kalrez										R		
EPDM	R		R	R	R	R			R	N		
EVA						R			R			
Valves												
Mild/stainless steel ball	R		R	R	R	R		R	R		R	R
Nylon	X			X		X			R			
PVC	N			N		N			N	N		N
Stainless steel	R		R	R	R	R		R			R	R
Polypropylene			R		R				R			N
Polyethylene[a]	X			X		X						N
Brass/bronze	X		R	N	R	N		R	R		R	R
ABS[c]									N	N		
Pumps												
Carbon steel	R		R	R	R	R			R			R
Stainless steel	R		R	R	R	R			R	R		R
Epoxy coated	R		R	X	R	X			R			
Cast iron	R			R		R						
Brass	N			N		N						
Fiberglass	R			X		X						N

[a]Includes polyolefin; if used for hose it should be cross linked.
[b]*Includes neoprene and eva.*
[c]Acrylonitrile-butadiene-styrene.

[1]The acceptability of materials for the above purposes is based on recommendations from various industry sources, and is not a recommendation or endorsement by MWPS.
Source: Wisconsin Dept of Agriculture, Trade and Consumer Protection.

APPENDIX K: GLOSSARY

Acronyms

CAA: Clean Air Act

CAER: Community Awareness and Emergency Response program

CERCLA: Comprehensive Environmental Response Compensation and Liability Act

CHEMTREC: Chemical Transporation Emergency Center

CWA: Clean Water Act

EPA: Environmental Protection Agency

FIFRA: Federal Insecticide, Fungicide and Rodenticide Act

GFCI: Ground-fault circuit-interrupter

LEPC: Local Emergency Planning Committee

MSDS: Material Safety Data Sheets

NEC: National Electric Code

NEMA: National Electric Manufacturers Association

NFPA: National Fire Protection Association

OSHA: Occupational Safety and Health Act/Administration

PPE: Personal protection equipment

QA: Quality Assessment

RCRA: Resource Conservation and Recovery Act

RQ: Reportable Quantity

SARA: Superfund Amendments and Reauthorization

SDWA: Safe Drinking Water Act

SERC: State Emergency Response Commission

SVR: Small Volume Returnable

TPQ: Threshold Planning Quantity

U.L.: Underwriters Laboratories Inc.

Terms

Absorbent pillow: ("pigs") a manufactured item used to absorb spilled product.

Building: A structure that stands alone or is cut off from adjoining structures by fire walls with all openings protected by approved fire doors. (An "important" building is generally considered one that is populated.)

Dike: A barrier constructed to contain, divert or direct a liquid flow. In this case, usually an earthen dike built for secondary containment for fertilizer facilities.

Disposal: Process of discarding or throwing away unused spray, surplus pesticides, containers. Also, the fate of an object or substance other than its originally intended use. Disposal includes recycling, recovering the energy value of the object or substance and discarding the object/substance as waste. Responsible disposal poses no significant risk to health or environment.

Dry-break connector: A device that prevents external drips when the connection is made or broken.

Emergency response plan: A set of guidelines and information used by personnel at a facility to help make decisions during an emergency.

Environment: Water, air, land and all plants, persons, animals living in or on water, air, land and the interrelationships between them.

Environmental assessment: The process of evaluating a given site/area for possible contamination, or the level, extent and movement of contamination if found. Tools of assessment include visual inspection, water samples, soil samples, examination of public records.

Groundwater: Water within the earth (occurring in a saturated subsurface geological formation of rock or soil) that supplies wells and springs.

Hazardous communication standard: Part of OSHA's Worker Right-to-Know Law that requires worker safety training.

Hazardous waste: Sludge contaminated by unknown or incompatible pesticides, or a known product whose characteristics of toxicity, reactivity, instability, corrosivity, etc. cause it to be defined hazardous by a regulatory body.

Non-point source: A non-identifiable site to which a spill, leak, etc. can be traced.

Non-target: Any crop(s), site(s) or use(s) that is not specified by a product label; any plant or animal other than the one against which the pesticide is applied.

One-way container: Containers that are used once and then disposed.

Performance standard: An approach to the requirements of facility design that allows different options for storing and handling pesticides and fertilizers as long as facilities perform satisfactorily.

Pesticide: A substance or mixture intended to prevent, destroy, repel or mitigate a pest (weeds, insects, rodents, fungi, etc.)

Point source: A specific identifiable site to which a spill, leak, etc. can be traced.

Rinsate: Water and sometimes solids, contaminated with pesticides or fertilizer of relatively low concentration. Rinsate becomes waste if it cannot be used according to the product label.

Secondary containment: Structures built around pesticide and fertilizer storage facilities to contain products that have escaped due to leaks, spills, fire, impacts, vandalism, etc.

Storage facility: A structure or location used primarily to store pesticides, including buildings, yards and other areas.

Subbase: A thin layer of granular material placed on top of a prepared subgrade.

Subgrade: The original ground, graded and compacted, on which a concrete floor or pad is placed.

Sump: A pit or reservoir serving as a receptacle for liquids; not considered storage but designed for immediate liquid recovery and transfer.

Surface water: Any of a number of visible water bodies, including lakes, bays, rivers, streams, ponds, impounding reservoirs, marshes, water courses, either public or private.

SVR: Small volume returnable, a container designed and constructed to accommodate safe return, safe refill and safe reuse of a product.

Target: The specific, intended use (site(s) or crop(s)) as directed by a product label; plant animal or other organism against which a pesticide is applied.

Threshold planning quantity: The quantity, set by regulation, of extremely hazardous substance(s). A facility storing or handling a quantity of the substance(s) that exceeds the TPQ, must report it. Contact LEPC for details.

Venturi injectors: Static devices that create a vacuum to pull liquid pesticides from containers.

Waste: Recovered material that can no longer be used for its originally intended purpose such as unusable spray mixtures, sludge, decontamination solutions.

INDEX

Acronyms 112
Agencies 3
Associations 97

Backflow prevention 59
Building codes 97

Closed mixing systems 53
Combustible liquid 21
Concrete
  Chemical resistance 64
  Cracks 64
  Curing 64
  Design 66
  Deterioration 92
  Jointing 65
  Quality 62
  Repairs 94
  Specifications 62
  Subbases 62
  Subgrades 61
Construction
  Door 22
  Fire rated 22
  Floor 20
  General 20
  Secondary containment 20
  Wall surfaces 20
Contaminated clothing 17

Design
  Building 19
  Concrete 66
  Electrical 24
  Fire safety 20
  Secondary containment 29

Electrical
  Area classification 24
  Degrees of hazard 24
  Design 24
  Explosion-proof 25
  Sources of ignition 25
Emergency response 79
Environmental assessment 5
EPA Regional Offices 107

Facilities
  Aerial 14
  Experimental farm 15
  Large scale 13
  Medium scale 12
  Mixing/loading 47
  Remodeling 7
  Small scale 10
Field washing 85
Fire safety 20, 25
  Classification 20
    Area 20
    Building use 21
    Liquids 21
  Code compliance 20
  Codes 20
  Design 20
  Explosion venting 21
  Regulations 20
Fire suppression 26
Flammable liquid 21

Laws
  Emergency response 79
  Federal 3

Metering tanks 55
Mixing/loading
  Equipment 51
  Functional organization 48
  Layout 47
  Pad 48
  Planning 47
  Sump 48, 51

Open mixing system 56
OSHA Regional Offices 108

Personal protection equipment 16
Pesticide storage
  Layout 18
  Management 19
  Packaged product 18
  Planning 18
  Security 19
  Setbacks 19
  Siting 19
Preventive maintenance 91
Protective treatments 92
Pump 51

Rinsate
  Management 84
  Segregation 85
Rinsing probe 55

Safety
  Equipment 16
  Pesticide storage 18
  Training 17
  Worker area 16
Secondary containment
  Methods of 40
    Asphalt 42
    Concrete 40
    Earthen dikes 43
    Fiberglass 42
    Steel 42
    Synthetic liners 43
  Sizing 35
  System design 9, 29

Site
Existing 5
Facility plan 5
New 5
Selection 5
State
Actions 4
Control Officials 102
Emergency Response
Commissions 100
Extension Program
Leaders/Coordinators 105
Storage
Areas 21
Cabinets 21
Container size 21
General 23
Inside 23
Liquid fertilizer 27
Mixing/loading 24
Pesticide 21
Portable 24
Warehouse 23

Ventilation
Air inlets 27
Heated storage 27
Mechanical 26
Natural 26
Rates 26

Waste
Disposal 88
Containers 90
Experimental 89
Methods 88
Reduction 83