**PatBase - Search results** 18 April 2016
**Search query (12):** TAC=(10 and 11)
**Results:** 51

Lady Cortes

**Search history**

Search 1: PN=(WO20130503529) (Results 0)

Search 2: PN=(WO2013050359) (Results 1)

Search 3: [SP]: 1. a disposable absorbent product comprising: a backsheet a topsheet overlaying said backsheet and a core disposed between said backsheet and said topsheet for retaining fluid secreted by a wearer of the absorbent product, said core including first and second fluid storage structures, each having a respective length dimension, a respective width dimension, and a respective thickness dimension orthogonal to said respective length and width dimensions, wherein: said respective thickness dimensions of said first and second fluid storage structures overlap one another, said second fluid storage structure extends along a longitudinal axis, said second fluid storage structure has a head portion and a pair of leg portions longitudinally opposed said head portion, and each of said leg portions extends along a minor axis defining an acute included angle with said longitudinal axis. 2. the disposable absorbent product of claim 1, wherein said leg portions are oriented so as to define an acute included angle between said minor axes. 3. the disposable absorbent product of claim 1, wherein said included angle is less than about 40 degrees. 4. the disposable absorbent product of claim 3, wherein said included angle is less than about 20 degrees. 5. the disposable absorbent product of claim 1, wherein the length of each leg portion is less than 10 percent of the overall length of said second fluid storage structure. 6. the disposable absorbent product of claim 1, wherein the length of each leg portion is greater than 20 percent of the overall length of said second fluid storage structure. 7. the disposable absorbent product of claim 1, wherein each of said leg portions has an inwardly-facing wall, said inwardly-facing walls defining a generally v-shape juncture between said leg portions. 8. the disposable absorbent product of claim 1, wherein said second fluid storage structure includes an arcuate depression defining a juncture between said leg portions. 9. the disposable absorbent product of claim 1, wherein said second fluid storage structure includes a central portion between said head portion and said leg portions, said head portion being wider than said central portion. 10. the disposable absorbent product of claim 1, wherein said head portion has a generally oval shape. 11. the disposable absorbent product of claim 1, wherein said head portion has the general shape of a heart. 12. the disposable absorbent product of claim 1, wherein said head portion includes a pair of arm portions and an arcuate depression defining a juncture there between. 13. the disposable absorbent product of claim 1, wherein said second fluid storage structure has a centrally-located opening extending through the thickness thereof. 14. the disposable absorbent product of claim 1, wherein said first fluid storage structure has an hourglass shape. 15. a disposable absorbent product comprising: a backsheet a topsheet overlaying said backsheet and a core disposed between said backsheet and said topsheet for retaining fluid secreted by a wearer of the absorbent product, said core including first and second fluid storage structures, each having a respective length dimension, a respective width dimension, and a respective thickness dimension orthogonal to said respective length and width dimensions, wherein: said respective thickness dimensions of said first and second fluid storage structures overlap one another, said second fluid storage structure has a head portion and a pair of leg portions longitudinally opposed said head portion, each of said leg portions extends along a minor axis defining an included angle of less than 40 degrees there between, and each of said leg portions has a length greater than 20 percent of the overall length of said second fluid storage structure. 16. the disposable absorbent product of claim 15, wherein said head portion is generally oval-shaped. 17. the disposable absorbent product of claim 15, wherein said head portion is generally heart-shaped. 18. the disposable absorbent product of claim 15, wherein said second fluid storage structure includes a centrally located, elongate opening extending through the thickness thereof. 19. the disposable absorbent product of claim 15, wherein said first and second fluid storage structures are spaced from one another along at least a portion of the periphery of said second fluid storage structure. 20. a disposable absorbent product comprising: a backsheet a topsheet overlaying said backsheet and a core disposed between said backsheet and said topsheet for retaining fluid secreted by a wearer of the absorbent product, said core having a length dimension, a width dimension, and a thickness dimension orthogonal to the length and width dimensions, said core including first and second fluid storage structures, said first fluid storage structure at least partially surrounding said second fluid storage structure in the thickness dimension, wherein: said second fluid storage structure has a generally heart-shaped head portion and a pair of leg portions longitudinally opposed said head portion, each of said leg portions has a length less than 10 percent of the overall length of said second fluid storage structure, and said second fluid storage structure includes an arcuate depression defining a juncture between said leg portions. 21. an absorbent core for use in an absorbent product, the absorbent core comprising: a first fluid storage structure and a second fluid storage structure,

wherein said first and second fluid storage structures have respective length, width, and thickness dimensions, each said thickness dimension being orthogonal to said respective length and width dimensions, said respective thickness dimensions of said first and second fluid storage structures overlap one another, said second fluid storage structure extends along a longitudinal axis, and includes a head portion and a pair of leg portions longitudinally opposed said head portion, and each of said leg portions extends along a minor axis defining an acute included angle with said longitudinal axis. (Results 31)

| | |
|---|---|
| Search 4: | PN=(WO2013050359) (Results 1) |
| Search 5: | TAC=(absorbent core) (Results 5384) |
| Search 6: | TAC=(two) (Results 100000) |
| Search 7: | TAC=(absorbent article) (Results 10423) |
| Search 8: | TAC=(7 and 6 and 5) (Results 1376) |
| Search 9: | TAC=(acquisition layer) (Results 556) |
| Search 10: | TAC=(8 and 9) (Results 111) |
| Search 11: | TAC=(superabsorbent) (Results 4407) |
| Search 12: | TAC=(10 and 11) (Results 51) |

**1) Family number: 14994061** (US4699619A) © PatBase

**Title:** Absorbent structure designed for absorbing body fluids

**Abstract:**
Source: US4699619A An absorbent structure designed for use in absorbent pads such as diapers is disclosed. According to a first aspect of the invention, absorbent pads are provided which comprise at least **two** layers of cellulosic fibers (fluff) of different densities or average pore size ranges. When the absorbent structure is incorporated in a diaper, the lower density element extends to the full length and width dimensions of the normal absorbent component of the diaper. The higher density element lies beneath at least a portion of the lower density element. According to various embodiments of the present invention, it can run as a strip from the target zone to the back waist of a diaper, it can run along a central portion extending the whole length of the diaper, or it can underlie the entirety of the lower density element. The higher density element (or the element having a lower average pore size) wicks waste fluid from a lower central portion of the diaper, and thereby transports the fluid upwardly and also transfers it to the lower density element (or the element of greater average pore size). According to a second aspect of the invention, which may be incorporated with the first aspect just described, a portion of **superabsorbent** material is placed beneath the higher density layer, (or layer of lower average pore size), such that an additional reservoir for absorbing waste fluid is provided.

**Classifications:**
**International (IPC 8-9):** A61F13/15 A61F13/472 A61F13/49 A61F13/53 A61F5/44 B01J20/28 (Advanced/Invention);
A61F5/44 (Advanced/Non-invention);
A61F13/15 (Core/Invention);
A41B A61F B32B (Subclass/Invention)
**International (IPC 1-7):** A41B13/02 A61F13/15 A61F13/16 A61F13/18 A61F13/46 A61F5/44 B32B23/00 B32B23/02 B32B23/10 B32B33/00
**CPC:** A61F13/49009 A61F13/535 A61F13/53747 A61F2013/15439 A61F2013/49076 A61F2013/530021 A61F2013/530525 A61F2013/5307 A61F2013/53445 A61F2013/53721 A61F13/53713 A61F2013/15406 A61F2013/15422
**European:** A61F13/49D2 A61F13/535 A61F13/537B2 A61F13/537C2 K61F13/15J8E K61F13/15J8H K61F13/15J8H2 K61F13/49H5 K61F13/534C K61F13/537B5 K61F13/53L2 K61F13/53Q2B K61F13/53Q6
**US:** 604/358 604/368 604/374 604/378

**Family:**

| Publication number | Publication date | Application number | Application date |
|---|---|---|---|
| AT124246 E | 19950715 | AT19850102911T | 19850401 |
| AT64293 E | 19910615 | AT19850103911T | 19850401 |
| AU198540768 A1 | 19851017 | AU19850040768 | 19850403 |
| AU198940282 A1 | 19900104 | AU19890040282 | 19890828 |
| AU589360 B2 | 19891012 | AU19850040768 | 19850403 |
| AU610750 B2 | 19910523 | AU19890040282 | 19890828 |
| BRPI8501715 A | 19851210 | BR1985PI01715 | 19850411 |
| CA1260202 A1 | 19890926 | CA19850477391 | 19850325 |
| DE3583176 D1 | 19910718 | DE19853583176 | 19850401 |
| DE3588034 D1 | 19950803 | DE19853588034 | 19850401 |
| DE3588034 T2 | 19951102 | DE19853588034T | 19850401 |
| EP0158914 A2 | 19851023 | EP19850103911 | 19850401 |
| EP0158914 A3 | 19870916 | EP19850103911 | 19850401 |
| EP0158914 B1 | 19910612 | EP19850103911 | 19850401 |
| EP0378247 A2 | 19900718 | EP19900102911 | 19850401 |
| EP0378247 A3 | 19900822 | EP19900102911 | 19850401 |
| EP0378247 B1 | 19950628 | EP19900102911 | 19850401 |
| GB2165757 A1 | 19860423 | GB19850009580 | 19850415 |
| GB2165757 B2 | 19881229 | GB19850009580 | 19850415 |

| | | | |
|---|---|---|---|
| GB2198357 A1 | 19880615 | GB19870026781 | 19871116 |
| GB2198357 B2 | 19881229 | GB19870026781 | 19871116 |
| GB8509580 A0 | 19850522 | GB19850009580 | 19850415 |
| GB8726781 A0 | 19871223 | GB19870026781 | 19871116 |
| HK93792 A | 19921204 | HK19920000937 | 19921126 |
| HK93892 A | 19921204 | HK19920000938 | 19921126 |
| JP1985024 C3 | 19951025 | JP19850079141 | 19850413 |
| JP2582226 B2 | 19970219 | JP19940198482 | 19940823 |
| JP61034203 A2 | 19860218 | JP19850079141 | 19850413 |
| JP7020481 B4 | 19950308 | JP19850079141 | 19850413 |
| JP7171180 A2 | 19950711 | JP19940198482 | 19940823 |
| KR920007562 B1 | 19920907 | KR19850002448 | 19850412 |
| MX162807 A | 19910626 | MX19850204946 | 19850412 |
| SG9191036 A | 19920214 | SG19910091036 | 19911204 |
| SG9191037 A | 19920214 | SG19910091037 | 19911204 |
| US4699619 A | 19871013 | US19860886780 | 19860717 |
| US5009650 A | 19910423 | US19870083475 | 19870806 |
| US5176668 A | 19930105 | US19890409210 | 19890919 |
| ZA8502358 A | 19860226 | ZA19850002358 | 19850328 |

**Priority:**

| | | |
|---|---|---|
| US19840599882 19840413 | US19840656384 19840831 | US19840656384 19841001 |
| EP19850103911 19850401 | EP19850103911 19850401 | CA19850477391 19850325 |
| GB19850009580 19850415 | JP19850079141 19850413 | US19870083475 19870806 |
| US19890409210 19890919 | US19860886780 19860717 | AU19850040768 19850403 |

**Probable Assignee:** KIMBERLY CLARK WORLDWIDE INC

**Assignee(s):** (std)**:** KIMBERLY CLARK CO

**Assignee(s):** KIMBERLY CLARK CORP ; KIMBERLY CLARK CORP NEENAH WIS US ; KIMBERLY CLARK WORLDWIDE INC ; BERNARDIN LEO J ; KIMBERLY CLARK A CORP OF DE CORP

**Inventor(s):** (std)**:** BERNARDIN LEO J ; LEO J BERNARDIN ; BERNARDIN LEO JOSEPH

**Inventor(s):** REO JIEI BAANAADEIN ; REO JEI BAANAADEIN ; LEO JOSEPH BERNARDIN

**Agent(s):** SPRUSON AND FERGUSON; ASPEN PHARMA PTY LTD; BORDEN LADNER GERVAIS LLP

**Designated states:** AT BE CH DE FR IT LI LU NL SE

**2) Family number: 20695554** (US5149334A) © PatBase

**Title:** **Absorbent** **articles** containing interparticle crosslinked aggregates

**Abstract:**
Source: US5149334A **Absorbent** **articles** such as diapers or sanitary napkins incorporating particulate, absorbent, polymeric compositions comprising interparticle crosslinked aggregates. The interparticle crosslinked aggregates comprise precursor particles of substantially water-insoluble, absorbent, hydrogel-forming, polymer material; and an interparticle crosslinking agent reacted with the polymer material of the precursor particles to form crosslink bonds between the precursor particles. The polymeric compositions of the present invention may be incorporated into **absorbent** **articles** as the sole absorbent material; as an **absorbent** **core** comprising a mixture of fiber material and discrete particles of the polymeric composition; or as a laminate (a layered **absorbent** **core**) containing such polymeric compositions. The performance of **absorbent** **articles** is enhanced by the use of such polymeric compositions due to the high rate of fluid uptake and minimal gel blocking properties of the interparticle crosslinked aggregates.

**Classifications:**
**International (IPC 8-9):** A61F13/00 A61F13/15 A61F13/49 A61F13/53 A61F13/56 A61L15/00 A61L15/16 A61L15/18 A61L15/22 A61L15/24 A61L15/42 A61L15/60 B32B23/02 C08G18/60 C08G18/64 C08G59/18 C08L101/00 C08L51/02 (Advanced/Invention);
A61F13/56 A61L15/00 A61L15/16 C08L101/00 (Advanced/Non-invention);
A61F13/00 A61F13/15 A61L15/00 A61L15/16 B32B23/00 C08G18/00 C08G59/00 C08L101/00 C08L51/00 (Core/Invention);
A61F13/56 (Core/Non-invention)
**International (IPC 1-7):** A61F13/00 A61F13/15 A61F13/20 A61F13/46 A61F13/49 A61F13/53 A61L15/16 A61L15/18 A61L15/20 A61L15/22 A61L15/24 A61L15/60 B01J20/26 B01J20/28 B32B23/02 B32B27/00 B32B27/06 B32B5/00 B32B5/16 C08G18/64 C08G59/18 C08J3/22 C08J5/04 C08K7/02 C08L51/02
**CPC:** A61F2013/15536 A61F2013/00519 D01H13/30 A61F2013/530437 Y10S428/913 A61F13/49 A61F13/51 A61F13/533 A61F13/53717 A61F13/53747 A61F13/53752 A61F2013/15284 A61F2013/15821 A61F2013/49033 A61F2013/53051 A61F2013/53054 A61F2013/53445 A61F2013/53795 A61F2013/8488 A61F2013/8491 A61F13/535 A61F2013/15365 A61F2013/49031 A61F2013/5103 A61F2013/51409 A61F2013/51411 A61F2013/5149 A61F2013/5307 A61L15/60 Y10T428/24777 Y10T428/24992 Y10T428/253 Y10T428/254 A61F13/49009 A61F13/512 A61F2013/4568 A61F2013/49076 A61F2013/5113 A61F2013/51147 A61F2013/588 A61L15/18 A61L15/42 Y10T428/25 Y10T428/2982 Y10T428/24942 Y10T442/3886 Y10T442/3919 Y10T442/674 Y10T442/678 Y10T442/671 Y10T442/673 Y10T442/699 A61F2013/530007 A61F2013/530131 A61F2013/530299 A61F2013/530496 A61F2013/530518 A61F2013/530532 A61F2013/530547 A61F2013/530569 A61F2013/530598 A61F2013/530671 A61F2013/530708 A61F2013/530766
**European:** A61F13/00 A61F13/535 A61F13/537B4 A61F13/537C2 A61F13/537C4 A61L15/18 A61L15/42 A61L15/60 D01H13/30 K61F13/00L1R K61F13/15H11 K61F13/15J8 K61F13/15J8D K61F13/15J8P8 K61F13/15M11 K61F13/45C4 K61F13/49 K61F13/49D2 K61F13/49D2H3 K61F13/49D2H4 K61F13/49H5 K61F13/51 K61F13/511D2 K61F13/511D6 K61F13/512 K61F13/514A4 K61F13/514A4A K61F13/514C4B K61F13/51M6C K61F13/533 K61F13/534C K61F13/537H K61F13/53L K61F13/53M K61F13/53M4E K61F13/53P K61F13/53Q1A K61F13/53Q2 K61F13/53Q2A K61F13/53Q2C K61F13/53Q2D K61F13/53Q2E K61F13/53Q3 K61F13/53Q4A1 K61F13/53Q5 K61F13/53Q6 K61F13/53Q8 K61F13/53Q8B3 K61F13/58F K61F13/84E K61F13/84E1
**US:** 428/192 428/212 428/218 428/219 428/283 428/284 428/286 428/288 428/290 428/302 428/323 428/326 428/327 428/402 428/913 442/290 442/294 442/392 442/393 442/394 442/398 442/417 604/367 604/368 604/369 604/375 604/378

**Family:**

| Publication number | Publication date | Application number | Application date |
|---|---|---|---|
| AT183071 E | 19990815 | AT19910907357T | 19910325 |
| AT183399 E | 19990915 | AT19920911230T | 19920409 |
| AU199175549 A1 | 19911030 | AU19910075549 | 19910325 |
| AU199218916 A1 | 19921117 | AU19920018916 | 19920409 |
| AU656133 B2 | 19950127 | AU19910075549 | 19910325 |

| | | | |
|---|---|---|---|
| AU666651 B2 | 19960222 | AU19920018916 | 19920409 |
| BRPI9106302 A | 19921201 | BR1991PI06302 | 19910325 |
| BRPI9205888 A | 19940705 | BR1992PI05888 | 19920409 |
| CA2078239 AA | 19920914 | CA19912078239 | 19910325 |
| CA2078239 C | 20010306 | CA19912078239 | 19910325 |
| CA2107592 AA | 19931001 | CA19922107592 | 19920409 |
| CA2107592 C | 19970708 | CA19922107592 | 19920409 |
| CN1056248 A | 19911120 | CN19911002853 | 19910402 |
| CN1060961 C | 20010124 | CN19911002853 | 19910402 |
| CN1067180 A | 19921223 | CN19921003419 | 19920411 |
| CN1071131 C | 20010919 | CN19921003419 | 19920411 |
| CZ281761 B6 | 19970115 | CS19930002135 | 19920409 |
| CZ9302135 A3 | 19940316 | CS19930002135 | 19920409 |
| DE69131524 D1 | 19990916 | DE19916031524 | 19910325 |
| DE69131524 T2 | 20000413 | DE19916031524T | 19910325 |
| DE69229828 D1 | 19990923 | DE19926029828 | 19920409 |
| DE69229828 T2 | 20000420 | DE19926029828T | 19920409 |
| EP0579764 A1 | 19940126 | EP19920911230 | 19920409 |
| EP0579764 B1 | 19990818 | EP19920911230 | 19920409 |
| EP0591168 A1 | 19940413 | EP19910907357 | 19910325 |
| EP0591168 A4 | 19921221 | EP19910907357 | 19910325 |
| EP0591168 B1 | 19990811 | EP19910907357 | 19910325 |
| ES2134195 T3 | 19991001 | ES19910907357T | 19910325 |
| ES2134805 T3 | 19991016 | ES19920911230T | 19920409 |
| FI924390 A | 19920930 | FI19920004390 | 19920930 |
| FI924390 A0 | 19920930 | FI19920004390 | 19920930 |
| FI934466 A | 19931011 | FI19930004466 | 19931011 |
| FI934466 A0 | 19931011 | FI19930004466 | 19931011 |
| HK1012898 A1 | 20000623 | HK19980114282 | 19981221 |
| HK1013027 A1 | 20000623 | HK19980114280 | 19981221 |
| HU216626 B | 19990728 | HU19930002872 | 19920409 |
| HU63952 A2 | 19931129 | HU19910002957 | 19910325 |
| HU66733 A2 | 19941228 | HU19930002872 | 19920409 |
| HU9302872 A0 | 19940128 | HU19930002872 | 19920409 |
| IE911053 A1 | 19911009 | IE19910001053 | 19910328 |
| IE921163 A1 | 19921021 | IE19920001163 | 19920410 |
| JP3386074 B2 | 20030310 | JP19910506637T | 19910325 |
| JP5506164 T2 | 19930916 | JP19910506637T | 19910325 |
| JP6507564 T2 | 19940901 | JP19920510874T | 19920409 |
| KR100240359 B1 | 20000302 | KR19937003086 | 19931011 |
| KR100348934 B1 | 20031011 | KR19920702405 | 19921001 |
| MA22103 A1 | 19911231 | MA19910022372 | 19910401 |
| NO305224 B1 | 19990426 | NO19930003604 | 19931008 |
| NO933604 A | 19931213 | NO19930003604 | 19931008 |
| NO933604 A0 | 19931008 | NO19930003604 | 19931008 |
| NZ237619 A | 19950328 | NZ19910237619 | 19910328 |
| NZ242316 A | 19950526 | NZ19920242316 | 19920410 |
| PL167130 B1 | 19950731 | PL19910296246 | 19910325 |
| PL169462 B1 | 19960731 | PL19920300814 | 19920409 |
| PL170456 B1 | 19961231 | PL19920310277 | 19920409 |
| PT100369 A | 19940429 | PT19920100369 | 19920410 |
| PT100369 B | 19990730 | PT19920100369 | 19920410 |
| PT97235 A | 19911231 | PT19910097235 | 19910402 |

| | | | |
|---|---|---|---|
| PT97235 B | 19990129 | PT19910097235 | 19910402 |
| RU2103970 C1 | 19980210 | SU19915053173 | 19910325 |
| RU2122391 C1 | 19981127 | SU19930058277 | 19920409 |
| RU93058277 A | 19960610 | RU19930058277 | 19931011 |
| SG76468 A1 | 20001121 | SG19960007993 | 19920409 |
| SK108393 A3 | 19940907 | SK19930001083 | 19920409 |
| SK279288 B6 | 19980909 | SK19930001083 | 19920409 |
| TH26534 A | 19970929 | TH19911000413 | 19910402 |
| US5149334 A | 19920922 | US19900503501 | 19900402 |
| US5180622 A | 19930119 | US19900503500 | 19900402 |
| US5419956 A | 19950530 | US19930080993 | 19930622 |
| US5422169 A | 19950606 | US19930149173 | 19931108 |
| US5505718 A | 19960409 | US19930124512 | 19930920 |
| WO9115177 A1 | 19911017 | WO1991US01892 | 19910325 |
| WO9218171 A1 | 19921029 | WO1992US02905 | 19920409 |

**Priority:**

| | | | | | |
|---|---|---|---|---|---|
| US19900503500 | 19900402 | US19900503501 | 19900402 | WO1991US01892 | 19910325 |
| US19910684633 | 19910412 | US19910685255 | 19910412 | US19910684712 | 19910412 |
| WO1992US02905 | 19920409 | US19930149173 | 19931108 | US19930080993 | 19930622 |

**Probable Assignee:** PROCTER AND GAMBLE CO

**Assignee(s):** (std)**:** PROCTER AND GAMBLE

**Assignee(s):** GILKESON GARY B ; PROCTER AND GAMBLE CO ; DZE PROKTER EHND GEHMBL KOMPANI ; LAHRMAN FRANK HENRY ; GILKESON GARY BERNARD ; PROCTER AND GAMBLE COMPANY THE ; THE PROCTOR AND GAMBLE COMPANY ; ROE DONALD C ; THE PROCTER AND GAMBLE COMPANY ; TEH PROCTER AND GAMBLE CO ; PROCTER AND GAMBLE CO US ; THE PROCTER AND GAMBLE CO US ; THE PROCTER AND GAMBLE CO CINCINNATI ; ROE DONALD CARROLL ; BERG CHARLES JOHN ; DRAGOO JERRY L ; DRAGOO JERRY LAYNE

**Inventor(s):** (std)**:** ROE DONALD CAROLL ; ROE DONALD C ; ROE DONALD ; ROE D C ; LAHZMAN F H ; LAHRMAN FRANK HENRY ; LAHRMAN FRANK H ; LAHRMAN FRANK ; LAHRMAN F H ; GILKESON GARY BERNARD ; GILKESON GARY B ; GILKESON G B ; GEHRI BERNARD DZHILKESON ; ROE DONALD CARROLL ; FREHNK GENRI LEHRMAN ; DRAGOO JERRY LAYNE ; DRAGOO JERRY L ; DRAGOO J L ; DZHERRI LEJN DRAGO ; DRAGOO LAYNE JERRY ; DONAL D KEHRROLL RO ; DONAL D KEHRROL ROU ; BERG CHARLES JOHN ; BERG CHARLES J ; BERG CHARLES ; BERG C J ; CHARLES JOHN BERG ; CHARL Z DZHON BERG

**Inventor(s):** C J BERG ; BERG CHARLES JOHN US ; FREHNK GENRI LEHRMAN[US] ; DONAL'D KEHRROLL RO ; DONAL'D KEHRROL ROU[US] ; CHARL'Z DZHON BERG[US] ; D C ROE ; DRAGOO JERRY LAYNE US ; DONALD CARROLL ROE ; FRANK HENRY LAHRMAN ; F H LAHRMAN ; ROE DONALD CAROLL US ; GARY BERNARD GILKESON ; G B GILKESON ; JERRY LAYNE DRAGOO ; J L DRAGOO ; GILKESON GARY BERNARD US ; LAHRMAN FRANK HENRY US

**Agent(s):** WATERMARK PATENT AND TRADE MARKS ATTORNEYS; SIM AND MCBURNEY

**Designated states:** AT AU BB BE BF BG BJ BR CA CF CG CH CI CM CS DE DK ES FI FR GA GB GN GR HU IT JP KP KR LI LK LU MC MG ML MN MR MW NL NO PL RO RU SD SE SN SU TD TG

**3) Family number: 49835179** (WO9311726A1) © PatBase

**Title:** HYGIENIC **ABSORBENT** **ARTICLE** HAVING MELTBLOWN COMPONENTS

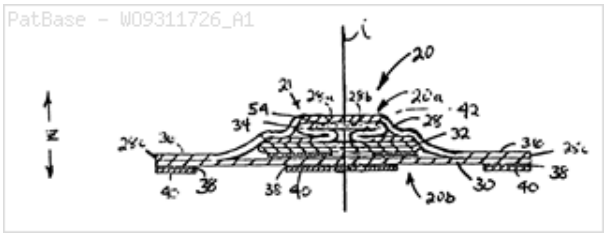


**Abstract:**
An **absorbent** **article**, such as a diaper, sanitary napkin, adult incontinent device, and the like having meltblown components is provided. The **absorbent** **article** preferably comprises a liquid pervious thermoplastic apertured film topsheet, a liquid impervious backsheet, an **absorbent** **core**, and a fibrous acquisition web of spunlaced nonwoven fibers. The **absorbent** **core** is positioned between the topsheet and backsheet which are joined at least about a portion of the periphery of the **absorbent** **article** and the topsheet is fused to the acquisition web at discrete points of attachment. The acquisition web is positioned between the topsheet and the **absorbent** **core**.

**Classifications:**
**International (IPC 8-9):** A61F13/15 A61F13/49 A61F13/511 A61F13/53 A61F13/538 D04H3/03 (Advanced/Invention);
A61F13/15 D04H3/02 (Core/Invention)
**International (IPC 1-7):** A61F13/15 A61F13/46 A61F13/49 A61F13/53 D04H1/54 D04H3/03
**CPC:** A61F13/47218 A61F13/51 A61F13/511 A61F13/51113 A61F13/5116 A61F13/512 A61F13/5126 A61F13/51305 A61F13/531 A61F13/533 A61F13/535 A61F13/53713 A61F13/53717 A61F13/53747 A61F13/5376 A61F13/539 A61F2013/15365 A61F2013/15382 A61F2013/15495 A61F2013/15504 A61F2013/15869 A61F2013/15878 A61F2013/15934 A61F2013/15967 A61F2013/4708 A61F2013/5103 A61F2013/51033 A61F2013/51061 A61F2013/51066 A61F2013/51083 A61F2013/51085 A61F2013/51165 A61F2013/51169 A61F2013/5128 A61F2013/51372 A61F2013/530007 A61F2013/530051 A61F2013/530058 A61F2013/530094 A61F2013/530102 A61F2013/530109 A61F2013/530131 A61F2013/530145 A61F2013/530153 A61F2013/53016 A61F2013/530167 A61F2013/530255 A61F2013/530299 A61F2013/530343 A61F2013/53035 A61F2013/530357 A61F2013/530372 A61F2013/530445 A61F2013/530547 A61F2013/530934 A61F2013/53445 A61F2013/53721 A61F2013/53726 A61F2013/53739 A61F2013/53765 A61F2013/53782 A61F2013/53786 A61F2013/5386 A61F2013/53908 A61F2013/53916 A61F2013/53925 A61F2013/5395 A61F2013/53966 A61F2013/53975 A61F2013/53983
**European:** A61F13/472B A61F13/512 A61F13/513B A61F13/531 A61F13/535 A61F13/537B2 A61F13/537B4 A61F13/537C2 A61F13/537D A61F13/539 K61F13/15F2 K61F13/15H11 K61F13/15H6 K61F13/15J8D K61F13/15J8D1A K61F13/15J8P1 K61F13/15J8P2 K61F13/15M11E1 K61F13/15M11E3 K61F13/15M11H K61F13/15M11H4 K61F13/47D K61F13/51 K61F13/511 K61F13/511C K61F13/511E K61F13/511E1 K61F13/511E1A K61F13/512C K61F13/512F K61F13/513G5 K61F13/51M6C K61F13/51M6D K61F13/51N1 K61F13/51N2 K61F13/51P2 K61F13/51P3 K61F13/533 K61F13/534C K61F13/537B5 K61F13/537B5A K61F13/537B5D K61F13/537E K61F13/537E4 K61F13/537E5 K61F13/538B K61F13/539A K61F13/539A1 K61F13/539A2 K61F13/539C K61F13/539E K61F13/539G K61F13/539H K61F13/53L K61F13/53L4B K61F13/53L5 K61F13/53L5B K61F13/53L5B1 K61F13/53L5B2 K61F13/53M K61F13/53M1A K61F13/53M1B K61F13/53M2 K61F13/53M2A K61F13/53M4D K61F13/53M4E K61F13/53M7 K61F13/53M7A K61F13/53M7B K61F13/53M7D K61F13/53P1 K61F13/53Q2E K61F13/53S5A

**Family:**

| Publication number | Publication date | Application number | Application date |
|---|---|---|---|
| AU199230741 A1 | 19930719 | AU19920030741 | 19921106 |
| AU199720093 A1 | 19970703 | AU19970020093 | 19970507 |
| AU679433 B2 | 19970703 | AU19920030741 | 19921106 |
| EP0617601 A1 | 19941005 | EP19920924423 | 19921106 |
| EP0617601 B1 | 19980812 | EP19920924423 | 19921106 |
| EP0617601 B2 | 20020710 | EP19920924423 | 19921106 |
| JP3459251 B2 | 20031020 | JP19930510905T | 19921106 |
| JP7502433 T2 | 19950316 | JP19930510905T | 19921106 |
| NZ245066 A | 19970727 | NZ19920245066 | 19921110 |
| WO9311726 A1 | 19930624 | WO1992US09753 | 19921106 |

**Priority:**

US19910810774 19911217 US19920944764 19920914 US19920957575 19921007
WO1992US09753 19921106 AU19920030741 19921106

**Probable Assignee:** PROCTER AND GAMBLE

**Assignee(s):** (std)**:** PROCTER AND GAMBLE

**Assignee(s):** PROCTER AND GAMBLE CO ; THE PROCTER AND GAMBLE CO ; THE PROCTER AND GAMBLE COMPANY

**Inventor(s):** (std)**:** BUELL KENNETH BARCLAY ; CARRIER MICHAEL EDWARD ; COOPER JOHN THOMAS ; COSTEA KARIN HELENE ; CREE JAMES WILLIAM ; DAGHER KAMAL JOSEPH ; DAVID JENNIFER LYNN ; AHR NICHOLAS ALBERT ; BROWN BRUCE ; BROWN BRUCE B ; MARSHALL ROBERT LEE E ; MILLS SUE ANN ; NOEL JOHN RICHARD ; OSBORN THOMAS WARD ; PLUMLEY JULIAN ; REISING GEORGE STEPHEN ; RUUSKA ROBERT WILLIAM ; TWOHY ELIZABETH BILYEU

**Inventor(s):** ROBERT LEE E MARSHALL ; BRUCE BROWN ; JAMES WILLIAM CREE ; JENNIFER LYNN DAVID ; JOHN THOMAS COOPER ; JULIAN PLUMLEY ; KARIN HELENE COSTEA

**Agent(s):** WATERMARK PATENT AND TRADE MARKS ATTORNEYS

**Designated states:** AT AU BB BE BF BG BJ BR CA CF CG CH CI CM CS DE DK ES FI FR GA GB GN GR HU IE IT JP KP KR LI LK LU MC MG ML MN MR MW NL NO PL RO RU SD SE SN TD TG UA

**4) Family number: 20270352** (US5295988A) © PatBase

**Title:** Individually wrapped disposable **absorbent** **article** which becomes elasticized when unwrapped

**Abstract:**
Source: US5295988A An article of manufacture is disclosed for absorbing liquids, particularly body fluids such as menses. The disclosed article is disposable and has a wrapper associated therewith. An elastic material is secured to the backsheet and is maintained in a substantially tensioned state until separation of the wrapper from the backsheet. Upon separation of the wrapper from the backsheet the tension in the elastic member is released causing the disposable **absorbent** **article** to form an upwardly cupped configuration to conform more closely to the wearer's body.

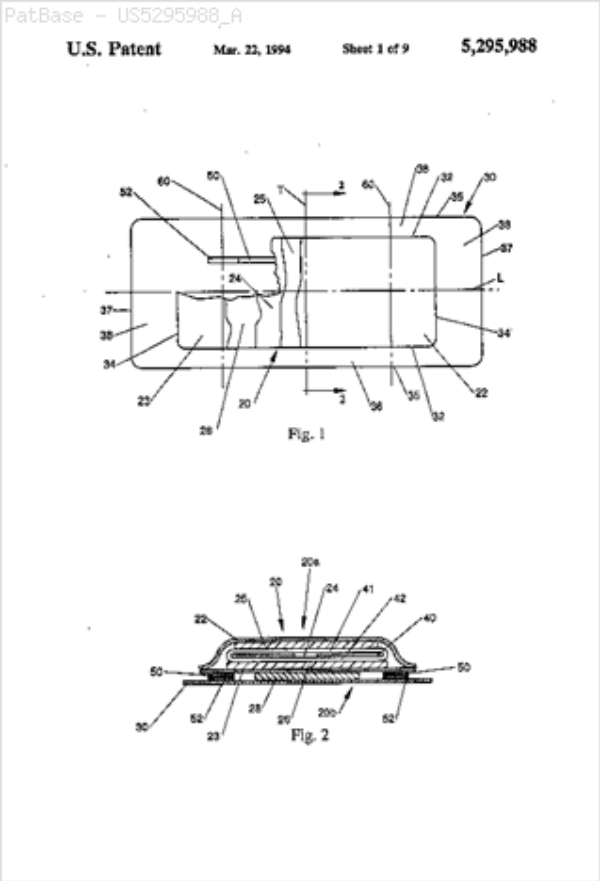


**Classifications:**
**International (IPC 8-9):** A61F13/15 A61F13/472 A61F5/44 B65D85/18 (Advanced/Invention); A61F13/15 A61F5/44 B65D85/18 (Advanced/Non-invention); A61F13/15 A61F5/44 B65D85/18 (Core/Invention); A61F13/15 (Core/Non-invention)
**International (IPC 1-7):** A61F13/15 A61F13/20 A61F13/46 A61F13/472 A61F13/551 A61F5/44 B31D B65D85/18
**CPC:** A61F13/47263 A61F13/49009 A61F13/537 A61F13/551 A61F13/5514 A61F2013/51147 A61F2013/51409 A61F2013/53016 A61F2013/530445 A61F2013/530481 A61F2013/530802 A61F2013/53721 A61F2013/53726 A61F2013/53795
**European:** A61F13/472D A61F13/551B2B K61F13/15C3D1 K61F13/15D4B K61F13/15E2D K61F13/15E2D4 K61F13/15E2D4A K61F13/15E2D7 K61F13/15E4C K61F13/15E6A K61F13/15E7 K61F13/15E8 K61F13/15H2 K61F13/49D2 K61F13/511D6 K61F13/514A4 K61F13/537 K61F13/537B5 K61F13/537B5A K61F13/537H K61F13/53M2 K61F13/53P1 K61F13/53Q K61F13/53R K61F13/551
**US:** 604/358 604/385.02 604/385.03 604/385.05 604/385.2 604/385.23 604/386 604/389 604/390

**Family:**

| Publication number | Publication date | Application number | Application date |
|---|---|---|---|
| AT167048 E | 19980615 | AT19930920334T | 19930825 |
| AU199350912 A1 | 19940329 | AU19930050912 | 19930825 |
| AU690078 B2 | 19980423 | AU19930050912 | 19930825 |
| BRPI9307009 A | 19990223 | BR1993PI07009 | 19930825 |
| CA2143458 AA | 19950227 | CA19932143458 | 19930825 |
| CA2143458 C | 19980818 | CA19932143458 | 19930825 |
| CN1078813 C | 20020206 | CN19931018982 | 19930904 |
| CN1087510 A | 19940608 | CN19931018982 | 19930904 |
| DE69319148 D1 | 19980716 | DE19936019148 | 19930825 |
| DE69319148 T2 | 19981105 | DE19936019148T | 19930825 |
| EG20077 A | 19970831 | EG19930000564 | 19930902 |
| EP0699062 A1 | 19960306 | EP19930920334 | 19930825 |
| EP0699062 B1 | 19980610 | EP19930920334 | 19930825 |

| | | | |
|---|---|---|---|
| ES2117144 T3 | 19980801 | ES19930920334T | 19930825 |
| FI951007 A | 19950303 | FI19950001007 | 19950303 |
| FI951007 A0 | 19950303 | FI19950001007 | 19950303 |
| HK1012159 A1 | 19990723 | HK19980113160 | 19981210 |
| JP3523868 B2 | 20040426 | JP19940507284T | 19930825 |
| JP8501007 T2 | 19960206 | JP19940507284T | 19930825 |
| KR100290939 B1 | 20011024 | KR19950700877 | 19950304 |
| KR19950702814 A | 19950823 | KR19950700877 | 19950304 |
| NO302396 B1 | 19980302 | NO19950000820 | 19950302 |
| NO950820 A | 19950426 | NO19950000820 | 19950302 |
| NO950820 A0 | 19950302 | NO19950000820 | 19950302 |
| NZ255889 A | 19970526 | NZ19930255889 | 19930825 |
| PH30785 A | 19971017 | PH19930046789 | 19930901 |
| PH30785 A | 19971017 | PH19930000467 | 19930901 |
| SG54168 A1 | 19981116 | SG19960003040 | 19930825 |
| TH14825 A | 19941028 | TH19931001563 | 19930901 |
| TH6354 B | 19961219 | TH19931001563 | 19930901 |
| TR27068 A | 19941012 | TR19930000756 | 19930903 |
| US5295988 A | 19940322 | US19920941341 | 19920904 |
| WO9405242 A1 | 19940317 | WO1993US07993 | 19930825 |

**Priority:**

US19920941341 19920904 WO1993US07993 19930825

**Probable Assignee:** PROCTER AND GAMBLE

**Assignee(s):** (std)**:** PROCTER AND GAMBLE ; PROCTER AND GAMBLE CO ; PROCTER AND GAMBLE CO THE ; THE PROCTER AND GAMBLE COMPANY ; THE PROCTER AND GAMBLE CO ; THE PROCTOR AND GAMBLE COMPANY

**Assignee(s):** THE PROCTER AND GAMBLE CO CINCINNATI OHIO US ; ROY KIM MARIE ; MUCKENFUHS DELMAR RAY

**Inventor(s):** (std)**:** DELMAR RAY MUCKENFUHS ; DR MUCKENFUHS ; KIM MARIE ROY ; KM ROY ; MARIE ROY KIM ; MUCKENFUHS D R ; MUCKENFUHS DEL MAR RAY ; MUCKENFUHS DELMAR ; MUCKENFUHS DELMAR R ; MUCKENFUHS DELMAR RAY ; RAY MUCKENFUHS DEL MAR ; ROY K M ; ROY KIM ; ROY KIM M ; ROY KIM MARIE ; MUCKENFUNS DELMAR R

**Inventor(s):** Ray ; ROY KIM MARIE LYNN MA 01904 US ; MUCKENFUHS DELMAR RAY MIDDLETOWN OH 45044 US ; MUCKENFUHS ; K M ROY ; D R MUCKENFUHS ; Delmar

**Agent(s):** WATERMARK PATENT AND TRADE MARKS ATTORNEYS; SIM AND MCBURNEY

**Designated states:** AT AU BB BE BF BG BJ BR BY CA CF CG CH CI CM CZ DE DK ES FI FR GA GB GN GR HU IE IT JP KP KR KZ LI LK LU MC MG ML MN MR MW NE NL NO NZ PL PT RO RU SD SE SK SN TD TG UA VN

**5) Family number: 31806944** (US5591149A) © PatBase

**Title:** **Absorbent** **article** having meltblown components

**Abstract:**
Source: US5591149A An **absorbent** **article**, such as a diaper, sanitary napkin, adult incontinent device, and the like having meltblown components is provided. The **absorbent** **articles** preferably comprises a liquid pervious thermoplastic apertured film topsheet, a liquid impervious backsheet, an **absorbent** **core**, and a fibrous acquisition web of spunlaced nonwoven fibers. The **absorbent** **core** is positioned between the topsheet and backsheet which are joined at least about a portion of the periphery of the **absorbent** **article** and the topsheet is fused to the acquisition web at discrete points of attachment. The acquisition web is positioned between the topsheet and the **absorbent** **core**.

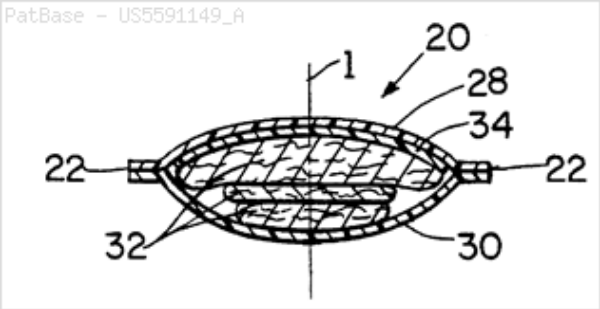


**Classifications:**
**International (IPC 8-9):** A61F13/15 (Advanced/Invention)
**International (IPC 1-7):** A61F13/15 A61F13/54
**CPC:** A61F13/53717 A61F13/47218 A61F13/51113 A61F13/5116 A61F13/512 A61F13/5126 A61F13/51305 A61F13/535 A61F13/53713 A61F13/53747 A61F13/539 A61F2013/15495 A61F2013/15504 A61F2013/15934 A61F2013/4708 A61F2013/51061 A61F2013/51083 A61F2013/51085 A61F2013/51165 A61F2013/530153 A61F2013/530445 A61F2013/53445 A61F2013/53726 A61F2013/53739 A61F2013/53782 A61F2013/53786 A61F2013/53916 A61F2013/53925 A61F2013/5395
**European:** A61F13/472B A61F13/512 A61F13/513B A61F13/535 A61F13/537B2 A61F13/537B4 A61F13/537C2 A61F13/539 K61F13/15H11 K61F13/15H6 K61F13/15J8P1 K61F13/15J8P2 K61F13/15M11H K61F13/47D K61F13/511C K61F13/511E K61F13/511E1 K61F13/512C K61F13/51N1 K61F13/51P2 K61F13/51P3 K61F13/534C K61F13/537B5A K61F13/537B5D K61F13/537E4 K61F13/537E5 K61F13/539A1 K61F13/539A2 K61F13/539C K61F13/53M1B K61F13/53P1
**US:** 604/368 604/370 604/378 604/381

**Family:**

| Publication number | Publication date | Application number | Application date |
|---|---|---|---|
| CN1085418 A | 19940420 | CN19921014631 | 19921111 |
| US5591149 A | 19970107 | US19920957575 | 19921007 |

**Priority:**
US19920957575 19921007

**Probable Assignee:** PROCTER AND GAMBLE CO

**Assignee(s):** (std)**:** PROCTER AND GAMBLE

**Assignee(s):** PROCTER AND GAMBLE CO ; PROCTER AND GAMBLE GMBH ; THE PROCTER AND GAMBLE CO ; THE PROCTER AND GAMBLE COMPANY

**Inventor(s):** (std)**:** BROWN BRUCE ; COOPER JOHN T ; COOPER JOHN THOMAS ; CREE JAMES W ; CREE JAMES WILLIAM ; DAVID JENNIFER ; MARSHALL III ROBERT E L ; MARSHALL ROBERT LEE E ; PLUMLEY JULIAN A

**Inventor(s):** ROBERT LEE E MARSHALL ; JAMES WILLIAM CREE ; JOHN THOMAS COOPER

**6) Family number: 48660596** (CA2125645A) © PatBase

**Title:** HYGIENIC **ABSORBENT** **ARTICLE** HAVING MELTBLOWN COMPONENTS

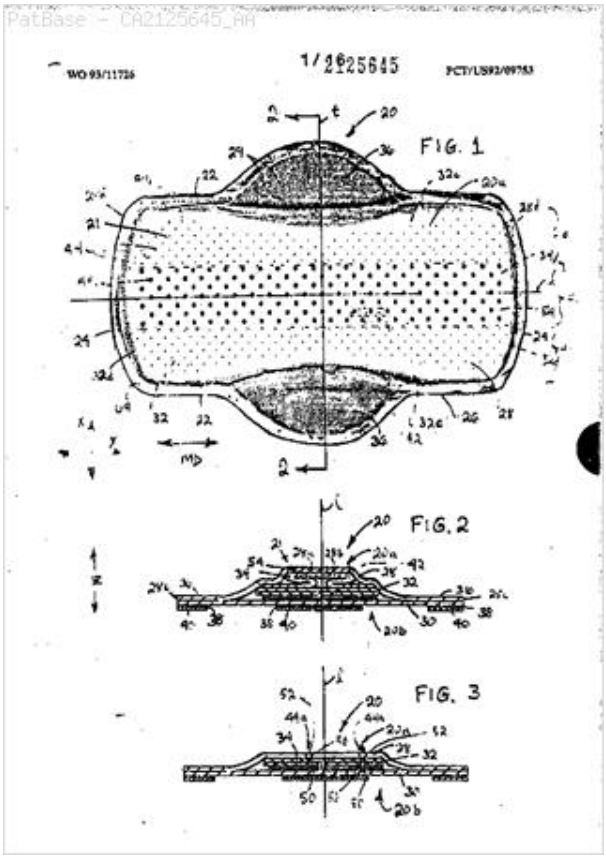


**Abstract:**
Source: CA2125645A An **absorbent** **article**, such as a diaper, sanitary napkin, adult incontinent device, and the like having meltblown components is provided. The **absorbent** **article** preferably comprises a liquid pervious thermoplastic apertured film topsheet, a liquid impervious backsheet, an **absorbent** **core**, and a fibrous acquisition web of spunlaced nonwoven fibers. The adsorbent core is positioned between the topsheet and backsheet which are joined at least about a portion of the periphery of the **absorbent** **article** and the topsheet is fused to the acquisition web at discrete points of attachment. The acquisition web is positioned between the topsheet and the **absorbent** **core**.

**Classifications:**
**International (IPC 8-9):** A61F13/15 A61F13/49 A61F13/511 A61F13/53 A61F13/538 D04H3/03 (Advanced/Invention)
**International (IPC 1-7):** A61F13/46
**CPC:** A61F13/53717 A61F13/47218 A61F13/51 A61F13/511 A61F13/51113 A61F13/5116 A61F13/512 A61F13/5126 A61F13/51305 A61F13/531 A61F13/533 A61F13/535 A61F13/53713 A61F13/53747 A61F13/5376 A61F13/539 A61F2013/15365 A61F2013/15382 A61F2013/15495 A61F2013/15504 A61F2013/15869 A61F2013/15878 A61F2013/15934 A61F2013/15967 A61F2013/4708 A61F2013/5103 A61F2013/51033 A61F2013/51061 A61F2013/51066 A61F2013/51083 A61F2013/51085 A61F2013/51165 A61F2013/51169 A61F2013/5128 A61F2013/51372 A61F2013/530007 A61F2013/530051 A61F2013/530058 A61F2013/530094 A61F2013/530102 A61F2013/530109 A61F2013/530131 A61F2013/530145 A61F2013/530153 A61F2013/53016 A61F2013/530167 A61F2013/530255 A61F2013/530299 A61F2013/530343 A61F2013/53035 A61F2013/530357 A61F2013/530372 A61F2013/530445 A61F2013/530547 A61F2013/530934 A61F2013/53445 A61F2013/53721 A61F2013/53726 A61F2013/53739 A61F2013/53765 A61F2013/53782 A61F2013/53786 A61F2013/5386 A61F2013/53908 A61F2013/53916 A61F2013/53925 A61F2013/5395 A61F2013/53966 A61F2013/53975 A61F2013/53983
**European:** A61F13/472B A61F13/512 A61F13/513B A61F13/531 A61F13/535 A61F13/537B2 A61F13/537B4 A61F13/537C2 A61F13/537D A61F13/539 K61F13/15F2 K61F13/15H11 K61F13/15H6 K61F13/15J8D K61F13/15J8D1A K61F13/15J8P1 K61F13/15J8P2 K61F13/15M11E1 K61F13/15M11E3 K61F13/15M11H K61F13/15M11H4 K61F13/47D K61F13/51 K61F13/511 K61F13/511C K61F13/511E K61F13/511E1 K61F13/511E1A K61F13/512C K61F13/512F K61F13/513G5 K61F13/51M6C K61F13/51M6D K61F13/51N1 K61F13/51N2 K61F13/51P2 K61F13/51P3 K61F13/533 K61F13/534C K61F13/537B5 K61F13/537B5A K61F13/537B5D K61F13/537E K61F13/537E4 K61F13/537E5 K61F13/538B K61F13/539A K61F13/539A1 K61F13/539A2 K61F13/539C K61F13/539E K61F13/539G K61F13/539H K61F13/53L K61F13/53L4B K61F13/53L5 K61F13/53L5B K61F13/53L5B1 K61F13/53L5B2 K61F13/53M K61F13/53M1A K61F13/53M1B K61F13/53M2 K61F13/53M2A K61F13/53M4D K61F13/53M4E K61F13/53M7 K61F13/53M7A K61F13/53M7B K61F13/53M7D K61F13/53P1 K61F13/53Q2E K61F13/53S5A

**Family:**

| Publication number | Publication date | Application number | Application date |
|---|---|---|---|
| CA2125645 AA | 19940610 | CA19922125645 | 19921106 |

| | | | |
|---|---|---|---|
| CA2125645 C | 19981124 | CA19922125645 | 19921106 |

**Priority:**

US19910810774 19911217 US19920944764 19920914 US19920957575 19921007
WO1992US09753 19921106

**Probable Assignee:** PROCTER AND GAMBLE

**Assignee(s):** (std)**:** PROCTER AND GAMBLE

**Assignee(s):** PROCTER AND GAMBLE COMPANY THE ; PLUMLEY JULIAN ASHTON ; PROCTER AND GAMBLE GMBH ; PROCTER AND GAMBLE CO ; BROWN BRUCE ; COOPER JOHN THOMAS ; CREE JAMES WILLIAM ; DAVID JENNIFER LYNN ; MARSHALL ROBERT LEE E III

**Inventor(s):** (std)**:** MARSHALL ROBERT L E ; DAVID JENNIFER LYNN ; DAVID JENNIFER L ; CREE JAMES WILLIAM ; CREE JAMES W ; COSTEA KARIN H ; COOPER JOHN THOMAS ; COOPER JOHN T ; BROWN BRUCE ; PLUMLEY JULIAN ASHTON ; PLUMLEY JULIAN A ; MARSHALL ROBERT LEE E III

**Inventor(s):** MARSHALL ROBERT LEE E

**7) Family number: 16255969** (US5746382A) © PatBase

**Title:** Fishing spinning reel with spool having tapered portion and guide

**Abstract:** Source: US5746382A A fishing spinning reel in which is so designed that the fishing line is prevented from being bound together when let out of the reel, whereby the fishing line is let out of the reel stably at all times. The spool (1) includes a tapered portion (4) which is gradually smaller in diameter towards the rear end, thus providing a fishing-line winding surface (2), and a guide (3) at the front end which, when the fishing line is let out of the reel, prevents the fishing line from touching a wound fishing-line surface (2a) formed by the fishing line wound on the spool.

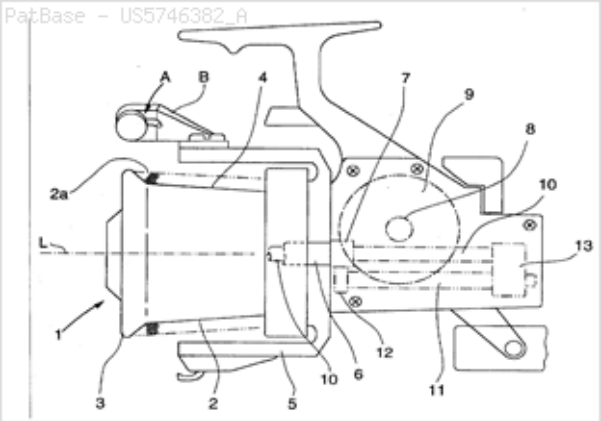


**Classifications:**
**International (IPC 8-9):** A01K89/01 A61F13/15 (Advanced/Invention); A61F13/15 (Core/Invention)
**International (IPC 1-7):** A01K89/01 A61F13/15
**CPC:** A01K89/0111
**European:** A01K89/01H
**US:** 242/322 242/613.1

**Family:**

| Publication number | Publication date | Application number | Application date |
|---|---|---|---|
| CO4750789 A1 | 19990331 | CO19960041106 | 19960802 |
| JP3007531 U | 19950221 | JP19940010736U | 19940805 |
| US5746382 A | 19980505 | US19970821411 | 19970321 |

**Priority:**
JP19940010736U 19940805 US19950510618 19950803 US19970821411 19970321

**Probable Assignee:** DAIWA SEIKO INC
**Assignee(s):** (std)**:** DAIWA SEIKO INC ; PROCTER AND GAMBLE
**Assignee(s):** PROCTER AND GAMBLE CO ; THE PROCTER AND GAMBLE COMPANY
**Inventor(s):** (std)**:** ROE DONALD CARROL ; TSUTSUMI WATARU
**Inventor(s):** CARROL ROE DONALD
**Agent(s):** ALVARO CORREA ORDONEZ

**8) Family number: 20424533** (US5830202A) © PatBase

**Title:** Absorbent comprising upper and lower gel layers

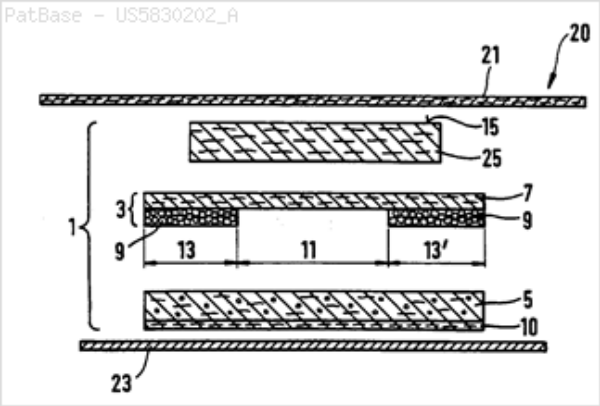


**Abstract:** Source: US5830202A PCT No. PCT/US95/08709 Sec. 371 Date Jan. 29, 1997 Sec. 102(e) Date Jan. 29, 1997 PCT Filed Jul. 13, 1995 PCT Pub. No. WO96/03947 PCT Pub. Date Feb. 15, 1996The invention relates to an absorbent structure (1) having a first layer which forms a mixture of absorbent gelling material particles (5), fibers, a second layer comprising liquid permeable substrate (7), and absorbent gelling material particles (9) attached to said substrate thus forming a laminate. The weight of the absorbent gelling material particles (5) in the mixed layer is not more than 70 percent, preferably not more than 60 percent of the weight of the mixed layer. The combined weight of the absorbent gelling material particles attached to the substrate (7), and in the mixed layer (5) is at least 80 percent, preferably at least 140 percent of the weight of fibers in the mixed layer (5). The laminate (7, 9) can be located on top of the mixed layer (5), and comprises an acquisition zone (15) of low basis weight of absorbent gelling material particles. The laminate may also be located below the mixed layer.

**Classifications:**
**International (IPC 8-9):** A61F13/15 A61F13/20 A61F13/49 A61F13/53 A61F13/534 A61F5/44 (Advanced/Invention);
A61F13/53 (Advanced/Non-invention);
A61F13/15 A61F5/44 (Core/Invention)
**International (IPC 1-7):** A61F13/00 A61F13/15 A61F13/20 A61F13/46 A61F13/50
**CPC:** A61F13/5323 A61F13/534 A61F13/535
**European:** A61F13/532B A61F13/534 A61F13/535
**US:** 604/368 604/378

**Family:**

| Publication number | Publication date | Application number | Application date |
|---|---|---|---|
| AU199530071 A1 | 19960304 | AU19950030071 | 19950713 |
| BRPI9508479 A | 19971028 | BR1995PI08479 | 19950713 |
| CA2196162 AA | 19970128 | CA19952196162 | 19950713 |
| CA2196162 C | 20010130 | CA19952196162 | 19950713 |
| CN1158558 A | 19970903 | CN19951095181 | 19950713 |
| CO4410169 A1 | 19970109 | CO19950033986 | 19950731 |
| DE69421613 D1 | 19991216 | DE19946021613 | 19940801 |
| DE69421613 T2 | 20000525 | DE19946021613T | 19940801 |
| DE69421613 T3 | 20040923 | DE19946021613T | 19940801 |
| EP0695541 A1 | 19960207 | EP19940111955 | 19940801 |
| EP0695541 B1 | 19991110 | EP19940111955 | 19940801 |
| EP0695541 B2 | 20040331 | EP19940111955 | 19940801 |
| ES2138019 T3 | 20000101 | ES19940111955T | 19940801 |
| GR3031932 T3 | 20000331 | GR19990403024T | 19991124 |
| HK1013231 A1 | 20000929 | HK19980114472 | 19981221 |
| JP10503683 T2 | 19980407 | JP19960506514 | 19950713 |
| JP2006167478 A2 | 20060629 | JP20060003786 | 20060111 |
| JP4527063 B2 | 20100818 | JP20060003786 | 20060111 |
| KR19970704391 A | 19970906 | KR19970700663 | 19970131 |

| | | | |
|---|---|---|---|
| MX9700830 A1 | 19970930 | MX19970000830 | 19950713 |
| PE15397 A1 | 19970515 | PE19950274995 | 19950731 |
| TR9500928 A2 | 19960621 | TR19950000928 | 19950801 |
| TR960100 A2 | 19960621 | TR19950000928 | 19950801 |
| US5830202 A | 19981103 | US19970776372 | 19970129 |
| WO9603947 A1 | 19960215 | WO1995US08709 | 19950713 |
| ZA9506381 A | 19970430 | ZA19950006381 | 19950731 |

**Priority:**

EP19940111955 19940801 WO1995US08709 19950713 JP19960506514 19950713
US19970776372 19970129 JP19960506514T 19950713

**Probable Assignee:** PROCTER AND GAMBLE CO

**Assignee(s):** (std)**:** BOGDANSKI MICHAEL SCOTT ; FEIST BARRY ROBERT ; LITCHHOLT JOHN JOSEPH ; PROCTER AND GAMBLE ; SANCHEZ LIZA MARIE ; SCHMIDT MATTIAS

**Assignee(s):** THE PROCTER AND GAMBLE CO CINCINNATI ; PROCTER AND GAMBLE GMBH ; PROCTER AND GAMBLE CO ; PROCTER AND GAMBLE COMPANY THE ; THE PROCTER AND GAMBLE COMPANY ; THE PROCTER AND GAMBLE CO ; THE PROCTER AND GAMBLE COMPANY CINCINNATI

**Inventor(s):** (std)**:** BOGDANSKI MICHAEL HOWARD ; BOGDANSKI MICHAEL S ; BOGDANSKI MICHAEL SCOTT ; BOGDANSKI MICHEAL SCOTT ; FEIST BARRY R ; FEIST BARRY ROBERT ; FEIST BARY ROBERT ; LITCHHOLT JOHN J ; LITCHHOLT JOHN JOSEPH ; LITCHHOLTZ JON JOSEPH ; SANCHEZ LIZA MARIE ; SANCHEZ MARIE SANCHEZ ; SCHMIDT MATTIAS

**Inventor(s):** MICHAEL HOWARD BOGDANSKI ; MARIE SANCHEZ SANCHEZ ; BARRY R FEIST ; BARRY ROBERT FEIST ; BARY ROBERT FEIST ; LIZA MARIE SANCHEZ ; MATTIAS SCHMIDT ; MICHAEL S BOGDANSKI ; MICHAEL SCOTT BOGDANSKI ; MICHEAL SCOTT BOGDANSKI ; JOHN J LITCHHOLT ; JOHN JOSEPH LITCHHOLT ; JON JOSEPH LITCHHOLTZ

**Agent(s):** SIM AND MCBURNEY; CARLOS REINALDO OLARTE GARCIA; NAGAI HIROSHI

**Designated states:** AM AT AU BB BE BF BG BJ BR BY CA CF CG CH CI CM CN CZ DE DK ES FI FR GA GB GN GR HU IE IT JP KE KG KP KR KZ LI LK LR LT LU LV MC MD MG ML MN MR MW MX NE NL NO NZ PL PT RO RU SD SE SG SI SK SN SZ TD TG TJ TT UA UG US UZ VN

**9) Family number: 11386947** (US5560878A) © PatBase

**Title:** Method and apparatus for making stretchable **absorbent** **articles**

**Abstract:** Source: US5560878A A method and apparatus for making stretchable absorbent diaper articles. An absorbent material is provided and entangled with a stretchable material to form a stretchable network incorporating the absorbent material. In one embodiment a plurality of foam absorbent material particulates are drawn or accelerated by gravity, vacuum or forced air through a stream of a meltblown adhesive that contacts and entangles the particulates and forms a stretchable network incorporating the particulates.

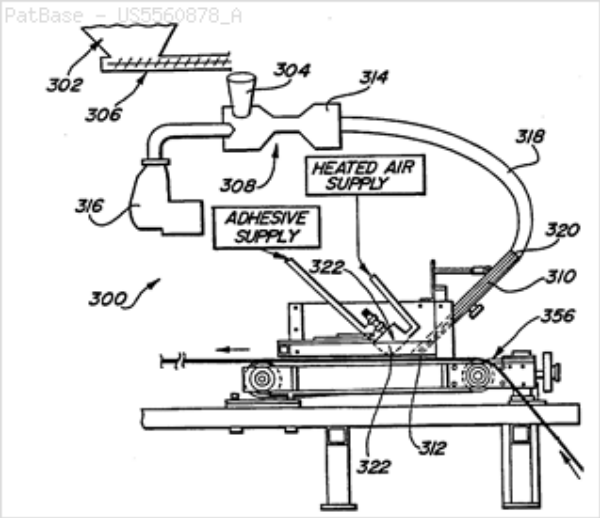


**Classifications:**
**International (IPC 8-9):** A61F13/00 A61F13/15 A61F13/472 A61F13/49 A61F13/53 A61F5/44 B32B5/30 (Advanced/Invention); A61F13/00 A61F5/44 (Advanced/Non-invention); A61F13/00 A61F13/15 A61F5/44 B32B5/22 (Core/Invention)
**International (IPC 1-7):** A61F13/00 A61F13/15 A61F13/46 A61F13/53 A61F5/44 B29C70/06
**CPC:** A61F13/534 A61F13/15658
**European:** A61F13/15M3G A61F13/534
**US:** 264/115 264/122 264/518 425/72.2 425/82.1 425/83.1

**Family:**

| Publication number | Publication date | Application number | Application date |
|---|---|---|---|
| AT194070 E | 20000715 | AT19950941470T | 19951122 |
| AU199642880 A1 | 19960619 | AU19960042880 | 19951122 |
| BRPI9509923 A | 19970930 | BR1995PI09923 | 19951122 |
| CA2204895 AA | 19970508 | CA19952204895 | 19951122 |
| CA2204895 C | 20010410 | CA19952204895 | 19951122 |
| CA2297601 AA | 19960606 | CA19952297601 | 19951122 |
| CA2297601 C | 20041102 | CA19952297601 | 19951122 |
| CN1124115 C | 20031015 | CN19951097334 | 19951122 |
| CN1173121 A | 19980211 | CN19951097334 | 19951122 |
| DE69517699 D1 | 20000803 | DE19956017699 | 19951122 |
| DE69517699 T2 | 20010222 | DE19956017699T | 19951122 |
| EP0788336 A1 | 19970813 | EP19950941470 | 19951122 |
| EP0788336 B1 | 20000628 | EP19950941470 | 19951122 |
| ES2147862 T3 | 20001001 | ES19950941470T | 19951122 |
| GR3033599 T3 | 20000929 | GR20000401269T | 20000629 |
| HK1002349 A1 | 20010518 | HK19980101133 | 19980212 |
| JP10510732 T2 | 19981020 | JP19960518958T | 19951122 |
| KR100226401 B1 | 19991015 | KR19977003642 | 19970530 |
| MX9703948 A1 | 19971031 | MX19970003948 | 19951122 |
| MY118431 A | 20041129 | MY19950003673 | 19951130 |
| TH20778 A | 19960924 | TH19951003071 | 19951129 |
| US5560878 A | 19961001 | US19940346653 | 19941130 |
| US5858292 A | 19990112 | US19960650298 | 19960520 |
| WO9616625 A1 | 19960606 | WO1995US15336 | 19951122 |

| | | | |
|---|---|---|---|
| ZA9510149 A | 19960606 | ZA19950010149 | 19951129 |

**Priority:**

| | | | | | |
|---|---|---|---|---|---|
| US19940346653 | 19941130 | CA19952204895 | 19951122 | US19960650298 | 19960520 |
| WO1995US15336 | 19951122 | CA19952297601 | 19951122 | CA19952297601 | 19951122 |

**Probable Assignee:** PROCTER AND GAMBLE

**Assignee(s):** (std)**:** PROCTER AND GAMBLE

**Assignee(s):** PROCTER AND GAMBLE CO ; THE PROCTER AND GAMBLE CO ; THE PROCTER AND GAMBLE COMPANY ; THE PROCTOR AND GAMBLE COMPANY ; THE PROCTER AND GAMBLE COMPANY CINCINNATI ; ZORB JAMES EDWARD ; DRAGOO JERRY LAYNE ; NEASE MICHAEL GARY

**Inventor(s):** (std)**:** DRAGOO JERRY L ; DRAGOO JERRY LAYNE ; DRAGOO LAYNE ; EDWARD ZORB JAMES ; GARY NEASE MICHAEL ; NEASE GARY ; NEASE MICHAEL G ; NEASE MICHAEL GARY ; NEAXE MICHAEL GARY ; ZORB EDWARD ; ZORB JAMES E ; ZORB JAMES EDWARD ; LAYNE DRAGOO JERRY ; MICHAEL

**Inventor(s):** JERRY L DRAGOO ; JAMES E ZORB ; MICHAEL GARY NEASE ; Dragoo ; MICHAEL G NEASE ; Zorb ; James Edward ; JAMES EDWARD ZORB ; Jerry Layne ; JERRY LAYNE DRAGOO

**Agent(s):** SIM AND MCBURNEY

**Designated states:** AL AM AT AU BB BE BF BG BJ BR BY CA CF CG CH CI CM CN CZ DE DK EE ES FI FR GA GB GE GN GR HU IE IS IT JP KE KG KP KR KZ LI LK LR LS LT LU LV MC MD MG MK ML MN MR MW MX NE NL NO NZ PL PT RO RU SD SE SG SI SK SN SZ TD TG TJ TM TT UA UG UZ VN

**10) Family number: 20721831** (US5603707A) © PatBase

**Title:** **Absorbent** **article** having a rewet barrier

**Abstract:**
Source: US5603707A The present invention provides an **absorbent** **article** having a rewet barrier. The **absorbent** **article** includes a liquid pervious topsheet, a liquid impervious backsheet joined to the topsheet, an **absorbent** **core** positioned between the topsheet and the backsheet, a fibrous **acquisition** **layer** positioned between the topsheet and the **absorbent** **core**, and a rewet barrier positioned between the fibrous **acquisition** **layer** and the **absorbent** **core**. The rewet barrier is an apertured, macroscopically expanded, three-dimensional polymeric web having a body facing surface and a garment facing surface.

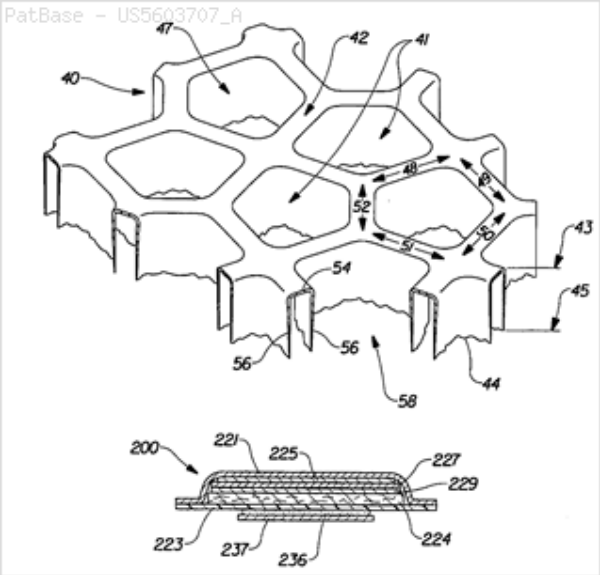


**Classifications:**
**International (IPC 8-9):** A61F13/15 A61F13/511 A61F5/44 (Advanced/Invention); A61F13/15 A61F5/44 (Advanced/Non-invention); A61F13/15 A61F5/44 (Core/Invention)
**International (IPC 1-7):** A61F13/15 A61F13/20 A61F5/44
**CPC:** A61F13/53743
**European:** A61F13/537C
**US:** 604/370 604/378 604/383

**Family:**

| Publication number | Publication date | Application number | Application date |
|---|---|---|---|
| AR004774 AA | 19990310 | AR1996P105355 | 19961127 |
| AU199710512 A1 | 19970619 | AU19970010512 | 19961114 |
| BRPI9611782 A | 19990223 | BR1996PI11782 | 19961114 |
| CA2237555 AA | 19980513 | CA19962237555 | 19961114 |
| CN1207664 A | 19990210 | CN19961099618 | 19961114 |
| CO4480096 A1 | 19970709 | CO19960062774 | 19961128 |
| DE69620008 D1 | 20020425 | DE19966020008 | 19961114 |
| DE69620008 T2 | 20021024 | DE19966020008T | 19961114 |
| EP0863736 A1 | 19980916 | EP19960941340 | 19961114 |
| EP0863736 B1 | 20020320 | EP19960941340 | 19961114 |
| JP11500651 T2 | 19990119 | JP19970520511T | 19961114 |
| KR100266496 B1 | 20000915 | KR19980703961 | 19980527 |
| KR19990071685 A | 19990927 | KR19980703961 | 19980527 |
| MX9804223 A1 | 19980930 | MX19980004223 | 19980527 |
| PE34598 A1 | 19980807 | PE19960000845 | 19961127 |
| TH25223 A | 19970523 | TH19961004073 | 19961126 |
| US5603707 A | 19970218 | US19950563711 | 19951128 |
| WO9719661 A1 | 19970605 | WO1996US18076 | 19961114 |
| ZA9609225 A | 19970611 | ZA19960009225 | 19961101 |

**Priority:**
US19950563711 19951128 WO1996US18076 19961114

**Probable Assignee:** PROCTER AND GAMBLE CO

**Assignee(s):** (std): PROCTER AND GAMBLE

**Assignee(s):** THE PROCTER AND GAMBLE COMPANY ; PROCTER AND GAMBLE CO ; THE

PROCTER AND GAMBLE COMPANY CINCINNATI ; THE PROCTER AND GAMBLE CO ; TROMBETTA LIBERATORE ANTONIO ; DARBY DENNIS ALLEN ; HUHTANEN JAYNE SUSAN ; PATEL DHANRAJ SHANTILAL

**Inventor(s):** (std)**:** DARBY ALLEN ; DARBY DENNIS A ; DARBY DENNIS ALLEN ; HUHTANEN JAYNE S ; HUHTANEN JAYNE SUSAN ; HUHTANEN SUSAN ; PATEL DHANRAJ S ; PATEL DHANRAJ SHANTILAL ; PATEL SHANTILAL ; SHANTILAL DHANRAJ ; TROMBETTA ANTONIO ; TROMBETTA LIBERATORE A ; TROMBETTA LIBERATORE ANTONIO

**Inventor(s):** ALLEN DARBY DENNIS ; ANTONIO TROMBETTA LIBERATORE ; SUSAN HUHTANEN JAYNE ; JAYNE SUSAN HUHTANEN ; LIBERATORE A TROMBETTA ; LIBERATORE ANTONIO TROMBETTA ; DENNIS A DARBY ; DENNIS ALLEN DARBY ; DHANRAJ S PATEL ; DHANRAJ SHANTILAL ; DHANRAJ SHANTILAL PATEL

**Agent(s):** WATERMARK PATENT AND TRADE MARKS ATTORNEYS; SIM AND MCBURNEY; CARLOS REINALDO OLARTE GARCIA

**Designated states:** AL AM AT AU AZ BA BB BE BF BG BJ BR BY CA CF CG CH CI CN CU CZ DE DK EE ES FI FR GB GE GR HU IE IL IS IT JP KE KG KP KR KZ LC LK LR LS LT LU LV MC MD MG MK MN MW MX NL NO NZ PL PT RO RU SD SE SG SI SK SZ TJ TM TR TT UA UG UZ VN

**11) Family number: 20725541** (WO9725951A1) © PatBase

**Title:** **ABSORBENT** **ARTICLE** HAVING AN ADJUSTMENT SYSTEM

**Abstract:**
The present invention provides an **absorbent** **article** having an adjustment system optimally placed on the backsheet and/or the topsheet to provide the **absorbent** **article** with an adjustable fit. Once the **absorbent** **article** is fitted about a wearer, the adjustment system may be adjusted to securely fit the **absorbent** **article** about a wearer's waist and legs, thus reducing the opportunities for leakage of bodily fluids.

**Classifications:**
**International (IPC 8-9):** A61F13/15 A61F13/49 A61F13/496 A61F13/56
A61F5/44 (Advanced/Invention);
A61F13/15 A61F13/47 A61F13/56
A61F5/44 (Advanced/Non-invention);
A61F13/15 A61F13/56 A61F5/44 (Core/Invention)
**International (IPC 1-7):** A61F13/15 A61F13/56 A61F5/44
**CPC:** A61F13/5638 A61F13/5655 A61F13/493
**European:** A61F13/493 A61F13/56C

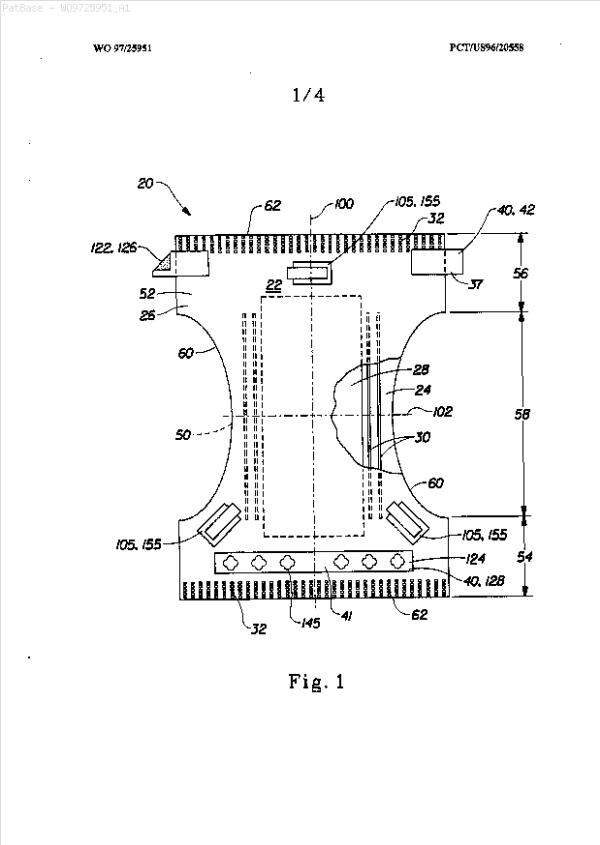

Fig. 1

**Family:**

| Publication number | Publication date | Application number | Application date |
|---|---|---|---|
| AU199713474 A1 | 19970811 | AU19970013474 | 19961218 |
| CA2243464 AA | 19980717 | CA19962243464 | 19961218 |
| CA2243464 C | 20021217 | CA19962243464 | 19961218 |
| DE69621044 D1 | 20020606 | DE19966021044 | 19961218 |
| DE69621044 T2 | 20021219 | DE19966021044T | 19961218 |
| EP0874611 A1 | 19981104 | EP19960945007 | 19961218 |
| EP0874611 B1 | 20020502 | EP19960945007 | 19961218 |
| ES2174131 T3 | 20021101 | ES19960945007T | 19961218 |
| JP11510088 T2 | 19990907 | JP19970526004T | 19961218 |
| KR100295533 B1 | 20011026 | KR19980705514 | 19980718 |
| KR19990077365 A | 19991025 | KR19980705514 | 19980718 |
| WO9725951 A1 | 19970724 | WO1996US20558 | 19961218 |

**Priority:**
US19960588487 19960118 WO1996US20558 19961218 WO1996US20558 19961218

**Probable Assignee:** PROCTER AND GAMBLE

**Assignee(s):** (std): PROCTER AND GAMBLE

**Assignee(s):** PROCTER AND GAMBLE CO ; PROCTER AND GAMBLE CO CINCINNATI ; THE PROCTER AND GAMBLE COMPANY ; THE PROCTER AND GAMBLE COMPANY CINCINNATI ; RONN KARL PATRICK

**Inventor(s):** (std)**:** RONN KARL PATRICK ; RONN PATRICK

**Inventor(s):** KARL PATRICK RONN

**Agent(s):** SIM AND MCBURNEY

**Designated states:** AL AM AT AU AZ BA BB BE BF BG BJ BR BY CA CF CG CH CI CN CU CZ DE DK EE ES FI FR GB GE GR HU IE IL IS IT JP KE KG KP KR KZ LC LK LR LS LT LU LV MC MD MG MK MN MW MX NL NO NZ PL PT RO RU SD SE SG SI SK SZ TJ TM TR TT UA UG UZ VN

**12) Family number: 28186295** (US2002032423A) © PatBase

**Title:** DISPOSABLE **ABSORBENT** **ARTICLES** WITH CONTROLLED SKIN HYDRATION EFFECT

**Abstract:**
Source: US2002032423A This invention is a disposable **absorbent** **article** (20) covering certain parts of the body of the wearer and comprising a loading area, a storage area, as well as a chassis area, whereby the **absorbent** **article** has a specific skin hydration value, calculated from the individual skin hydration values of the respective areas.

**Classifications:**
**International (IPC 8-9):** A61F13/00 A61F13/15 A61F13/20 A61F13/49 A61F13/53 A61F5/44 A61L15/60 (Advanced/Invention);
A61F13/15 A61F13/20 A61F5/44 (Advanced/Non-invention);
A61F13/00 A61F13/15 (Core/Non-invention)
**International (IPC 1-7):** A61F13/00 A61F13/15 A61F13/20 A61F5/44 A61L15/32 A61L15/60
**CPC:** A61F13/535 A61F13/84 A61F2013/8491
**European:** A61F13/535 A61F13/84 K61F13/15D10E K61F13/15D2D K61F13/15D3 K61F13/15D6C K61F13/15D7F K61F13/84E1
**US:** 604/358 604/367 604/368 604/368S 604/378 604/378P

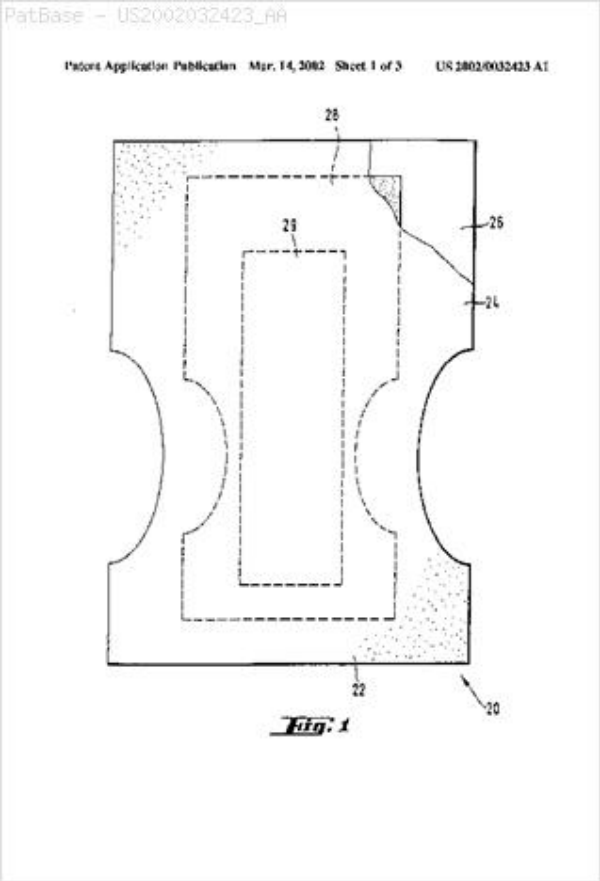


**Family:**

| Publication number | Publication date | Application number | Application date |
|---|---|---|---|
| AR006409 AA | 19990825 | AR1997P101222 | 19970326 |
| AT250403 E | 20031015 | AT19960105023T | 19960329 |
| AU199725889 A1 | 19971022 | AU19970025889 | 19970325 |
| BRPI9708394 A | 19990803 | BR1997PI08394 | 19970325 |
| CA2250594 AA | 19980925 | CA19972250594 | 19970325 |
| CA2250594 C | 20030204 | CA19972250594 | 19970325 |
| CN1218382 A | 19990602 | CN19971094447 | 19970325 |
| CO4810294 A1 | 19990630 | CO19970015983 | 19970331 |
| CZ9803113 A3 | 19990113 | CZ19980003113 | 19970325 |
| DE69630104 D1 | 20031030 | DE19966030104 | 19960329 |
| DE69630104 T2 | 20040701 | DE19966030104T | 19960329 |
| EG20963 A | 20000730 | EG19970000248 | 19970327 |
| EP0797968 A1 | 19971001 | EP19960105023 | 19960329 |
| EP0797968 B1 | 20030924 | EP19960105023 | 19960329 |
| HU222069 B1 | 20030428 | HU19990002533 | 19970325 |
| HU9902533 AB | 19991228 | HU19990002533 | 19970325 |
| HU9902533 AC | 20000228 | HU19990002533 | 19970325 |

| | | | |
|---|---|---|---|
| ID16426 A | 19970925 | ID19970001089 | 19970331 |
| IL126359 A0 | 19990509 | IL19970126359 | 19970325 |
| IL126359 A1 | 20030624 | IL19970126359 | 19970325 |
| JP11509454 T2 | 19990824 | JP19970535375T | 19970325 |
| KR100308550 B1 | 20011114 | KR19980707777 | 19980929 |
| KR20000005131 A | 20000125 | KR19980707777 | 19980929 |
| NO984520 A | 19981130 | NO19980004520 | 19980928 |
| NO984520 A0 | 19980928 | NO19980004520 | 19980928 |
| TH48689 A | 20011217 | TH19971001191 | 19970328 |
| TR9801944 T2 | 20000921 | TR19980001944T | 19970325 |
| TW372191 B | 19991021 | TW19970120003 | 19971230 |
| US2002032423 AA | 20020314 | US19980155469 | 19980929 |
| US2002087135 AA | 20020704 | US20020052118 | 20020117 |
| US6388166 BA | 20020514 | US19980155469 | 19980929 |
| WO9736562 A1 | 19971009 | WO1997US04807 | 19970325 |
| ZA9702636 A | 19971021 | ZA19970002636 | 19970326 |

**Priority:**

EP19960105023 19960329 WO1997US04807 19970325 US19980155469 19980929 US20020052118 20020117

**Probable Assignee:** PROCTER AND GAMBLE CO

**Assignee(s):** (std)**:** DOMINGUEZ STAEDKE JOSE ; DOMINGUEZ STAEDKE JOSE NICOLAS ; HERRLEIN MATHAIS KURT ; HERRLEIN MATHIAS KURT ; LANKHOF JOHN PETER ; OLLIVER IVAN JEAN ; OLLIVIER IVAN JEAN ; PROCTER AND GAMBLE ; PROCTER AND GAMBLE CO THE ; ROBERTSON MUIR CHARLES ; SCHUMANN KARL MICHAEL ; THE PROCTER AND GAMBLE CO ; THE PROCTER AND GAMBLE COMPANY

**Assignee(s):** THE PROCTER AND GAMBLE COMPANYUS ; THE PROCTER AND GAMBLE CO CINCINNATI OHIO ; THE PROCTER AND GAMBLE CO CINCINNATI ; PROCTER AND GAMBLE GMBH ; THE PROCTER AND GAMBLE COMPANY CINCINNATI ; PROCTER AND GAMBLE CO

**Inventor(s):** (std)**:** DOMINGUEA ST JOSE NICOLAS ; DOMINGUEA STAEDKE JOSE NICOLAS ; DOMINGUES STAEDKE JOSE NICOLAS ; DOMINGUEZ STAEDKE JOSE ; DOMINGUEZ STAEDKE JOSE NICOLAS ; HERRLEIN MATHAIS KURT ; HERRLEIN MATHIAS ; HERRLEIN MATHIAS KURT ; IVAN JEAN OLIVIER ; IVAN JEAN OLLIVIER ; JOHN P LANKHOF ; JOHN PETER LANKHOF ; JOSE NICOLAS DOMINGUEA STAEDKE ; JOSE NICOLAS DOMINGUEZ STAEDKE ; KARL MICHAEL SCHUMANN ; MATHAIS KURT HERRLEIN ; MATHIAS K HERRLEIN ; MATHIAS KURT HERRLEIN ; MUIR C ROBERTSON ; MUIR CHARLES ROBERTSON ; OLIVIER IVAN JEAN ; OLLIVER IVAN JEAN ; OLLIVIER IVAN JEAN ; OLLIVIER IVAN JEAN FRANKFURT ; LAKHOF JOHN PETER ; LANKHOF JOHN PETER ; LANKHOF JOHN PETER KELKHEIM ; ROBERTSON MUIR CHARLES ; SCHUMANN KARL MICHAEL ; SCHUMANN KARL MICHAEL BAD SODE ; ROBERTSON MUIR C ; LANKHOF JOHN P ; HERRLEIN MATHIAS K ; ROBERSON MUIR CHARLES ; ROBERSON MUIR CHARLES KOENIGST

**Inventor(s):** ROBERSON MUIR CHARLES KOENIGSTEIN 61462 ; DOMINGUEZ STAEDKE JOSE N ; SCHUMANN KARL MICHAEL BAD SODEN 65812 ; LANKHOF JOHN PETER KELKHEIM 65779 ; OLLIVIER IVAN JEAN FRANKFURT 60322 ; KURT HERRLEIN MATHAIS ; JOSE NICOLAS DOMINGUEA ST ; JOHN PETER LAKHOF ; JEAN OLLIVIER IVAN

**Agent(s):** SIM AND MCBURNEY; CARLOS REINALDO OLARTE GARCIA; REINHOLD COHN AND PARTNERS

**Designated states:** AL AM AT AU AZ BA BB BE BF BG BJ BR BY CA CF CG CH CI CM CN CU CZ DE DK EE ES FI FR GA GB GE GH GN GR HU IE IL IS IT JP KE KG KP KR KZ LC LI LK LR LS LT LU LV MD MG MK ML MN MR MW MX NE NL NO NZ PL PT RO RU SD SE SG SI SK SN SZ TD TG TJ TM TR TT UA UG US UZ VN YU

**13) Family number: 28681622** (US6278037B) © PatBase

**Title:** **Absorbent** **article** having improved comfort during use by improved fit even when loaded and improved rewet performance

**Abstract:**
Source: US6278037B **Absorbent** **article** comprising an **absorbent** **core** with a crotch region and at least one waist region, whereby said crotch region has a lower ultimate fluid storage capability than said at least one waist region. The article further has an improved fluid handling performance in particular a low rewet value for minimizing skin hydration during use, such as measured by the post acquisition collagen rewet method value not exceeding 180 mg.

**Classifications:**
**International (IPC 8-9):** A47G7/00 A61F13/00 A61F13/15 A61F13/40 A61F13/49 A61F13/53 A61F5/44 (Advanced/Invention);
A61F5/44 (Advanced/Non-invention);
A47G7/00 A61F13/15 A61F5/44 (Core/Invention);
A61F13/00 A61F13/40 (Core/Non-invention);
A61F B32B (Subclass/Invention)
**International (IPC 1-7):** A47G7/00 A61F13/00 A61F13/15 A61F13/40 A61F13/49 A61F13/53 A61F5/44
**CPC:** A61F13/15203 A61F2013/15284 A61F2013/530437 A61F2013/530481 A61F2013/530817
**European:** A61F13/15J K61F13/15J8 K61F13/53P K61F13/53Q K61F13/53R1A
**US:** 604/367 604/369 604/378

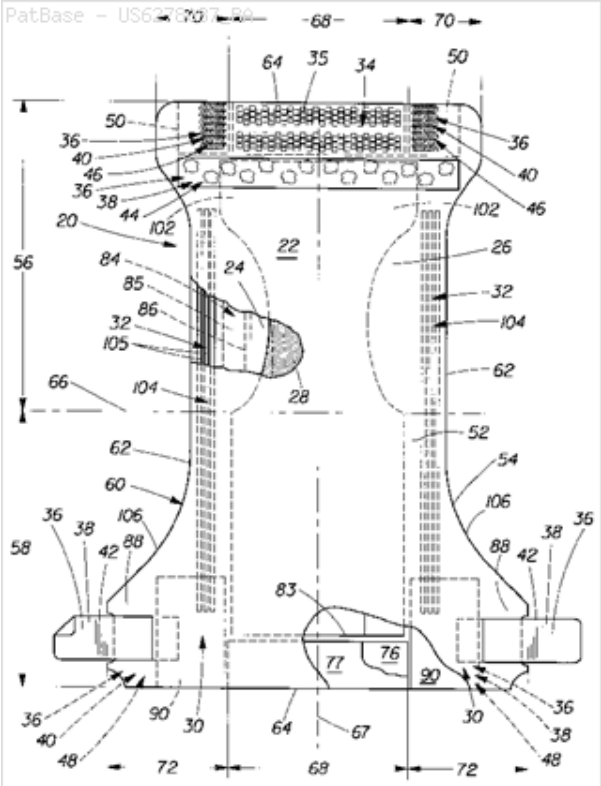

**Family:**

| Publication number | Publication date | Application number | Application date |
|---|---|---|---|
| AT227553 E | 20021115 | AT19970917664T | 19970327 |
| AU199725927 A1 | 19981022 | AU19970025927 | 19970327 |
| BRPI9714654 A | 20000711 | BR1997PI14654 | 19970327 |
| CA2285429 AA | 19990924 | CA19972285429 | 19970327 |
| CA2285429 C | 20031125 | CA19972285429 | 19970327 |
| CO4650276 A1 | 19980903 | CO19980016986 | 19980326 |
| CZ296731 B6 | 20060517 | CZ19990003408 | 19970327 |
| CZ9903408 A3 | 20000315 | CZ19990003408 | 19970327 |
| DE69717157 D1 | 20021219 | DE19976017157 | 19970327 |
| DE69717157 T2 | 20030313 | DE19976017157T | 19970327 |
| DE69717157 T3 | 20061130 | DE19976017157T | 19970327 |
| EG21419 A | 20011031 | EG19980000337 | 19980325 |
| EP0975294 A1 | 20000202 | EP19970917664 | 19970327 |
| EP0975294 B1 | 20021113 | EP19970917664 | 19970327 |
| EP0975294 B2 | 20060726 | EP19970917664 | 19970327 |
| EP1236454 A2 | 20020904 | EP20020008172 | 19970327 |
| ES2185927 T3 | 20030501 | ES19970917664T | 19970327 |
| ES2185927 T5 | 20070401 | ES19970917664T | 19970327 |
| HK1025497 A1 | 20030905 | HK20000104660 | 20000726 |

| | | | |
|---|---|---|---|
| HU0002363 AB | 20001128 | HU20000002363 | 19970327 |
| HU0002363 AC | 20001228 | HU20000002363 | 19970327 |
| HU0200042 U0 | 20020429 | HU20020000042U | 20020215 |
| HU222356 B1 | 20030628 | HU20000002363 | 19970327 |
| HU2363 U | 20020828 | HU20020000042U | 20020215 |
| ID21351 A | 19990527 | ID19980000436 | 19980326 |
| IL132071 A0 | 20010319 | IL19970132071 | 19970327 |
| IL132071 A1 | 20040927 | IL19970132071 | 19970327 |
| IN00636DE1998 A | 20060303 | IN1998DE00636 | 19980312 |
| IN215280 B | 20080307 | IN1998DE00636 | 19980312 |
| JP2000510033 T2 | 20000808 | JP19980541571T | 19970327 |
| JP3771276 B2 | 20060426 | JP19980541571T | 19970327 |
| NO994652 A | 19991126 | NO19990004652 | 19990924 |
| NO994652 A0 | 19990924 | NO19990004652 | 19990924 |
| PT975294 T | 20030331 | PT19970917664T | 19970327 |
| TR9902644 T2 | 20000522 | TR19990002644T | 19970327 |
| TW365531 B | 19990801 | TW19980105325 | 19980409 |
| US6278037 BA | 20010821 | US19990381927 | 19991105 |
| WO9843579 A1 | 19981008 | WO1997US05048 | 19970327 |
| ZA9802256 A | 19980916 | ZA19980002256 | 19980317 |

**Priority:**

| | | | | | |
|---|---|---|---|---|---|
| CZ19990003408 | 19970327 | EP19970917664 | 19970327 | HU20000002363 | 19970327 |
| BR1997PI14654 | 19970327 | IL19970132071 | 19970327 | WO1997US05048 | 19970327 |
| HU20020000042U | 20020215 | NO19990004652 | 19990924 | NO19990004652 | 19990924 |
| US19990381927 | 19991105 | US19970005048 | 19970327 | | |

**Probable Assignee:** PROCTER AND GAMBLE CO

**Assignee(s):** (std)**:** HELLER ZSUZSA G ; LAVON GARY DEAN ; NEUMANN FRANK ; PALUMBO GIANFRANCO ; PROCTER AND GAMBLE ; EHRNSPERGER BRUNO JOHANNES ; YOUNG GERALD ALFRED ; SCHMIDT MATTIAS ; PROCTER AND GAMBLE CO CINCINNA ; THE PROCTER AND GAMBLE COMPANY ; THE PROCTER AND GAMBLE CO ; THE PROCTOR AND GAMBLE COMPANY

**Assignee(s):** THE PROCTER AND GAMBLE COMPANYUS ; THE PROCTER AND GAMBLE CO CINCINNATI OHIO ; THE PROCTER AND GAMBLE CO CINCINNATI ; PROCTER AND GAMBLE GMBH ; THE PROCTER AND GAMBLE COMPANY CINCINNATI ; PROCTER AND GAMBLE COMPANY THE ; PROCTER AND GAMBLE CO ; PROCTOR AND GAMBLE CO ; G HELLER ZSUZSA

**Inventor(s):** (std)**:** BRUNO JOHANNES EHRNSPERGER ; DEAN LAVON GARY ; EHRNSPERGER BRUNO JOHANNES ; EHRNSPERGER JOHANNES ; FRANK NEUMANN ; G HELLER ZSUZSA ; GAINFRANCO PALUMBO ; GARY DEAN LAVON ; GERALD ALFRED YOUNG ; GIANFRANCO PALUMBO ; LAVON DEAN ; LAVON GARY D ; LAVON GARY DEAN ; MATTIAS SCHMIDT ; NEUMANN FRANK ; PALUMBO GIANFRANCO ; SCHMIDT MATTIAS ; YOUNG ALFRED ; YOUNG GARY A ; YOUNG GERALD A ; YOUNG GERALD ALFRED

**Inventor(s):** PALUMBO GAINFRANCO

**Agent(s):** SIM AND MCBURNEY; CARLOS REINALDO OLARTE GARCIA; REINHOLD COHN AND PARTNERS

**Designated states:** AL AM AT AU AZ BA BB BE BF BG BJ BR BY CA CF CG CH CI CM CN CU CZ DE DK EE ES FI FR GA GB GE GH GN GR HU IE IL IS IT JP KE KG KP KR KZ LC LI LK LR LS LT LU LV MC MD MG MK ML MN MR MW MX NE NL NO NZ PL PT RO RU SD SE SG SI SK SN SZ TD TG TJ TM TR TT UA UG US UZ VN YU

**14) Family number: 20655024** (US6359192B) © PatBase

**Title:** **Absorbent** **article** with improved fluid distribution materials

**Abstract:**
Source: US6359192B Disclosed is an **absorbent** **article** comprising an **absorbent** **core** with a crotch region and at least one waist region, whereby said crotch region has a lower ultimate fluid storage capability than said at least one waist region. The crotch region further comprises a high flux liquid distribution material having a flux at 12.4 cm of more than 0.075 g/cm2/sec.

**Classifications:**
**International (IPC 8-9):** A61F13/15 A61F13/45 A61F13/49 A61F13/53
A61F5/44 (Advanced/Invention);
A61F13/15 A61F5/44 (Advanced/Non-invention);
A61F13/15 A61F5/44 (Core/Invention);
A61F13/15 (Core/Non-invention);
A61F (Subclass/Invention)
**International (IPC 1-7):** A61F13/15 A61F13/49 A61F13/53 A61F2/00 A61F5/44
**CPC:** A61F13/15203 A61F13/532 A61F13/5376
**European:** A61F13/15J A61F13/532 A61F13/537D
**US:** 604/369 604/375 604/378 604/385.01

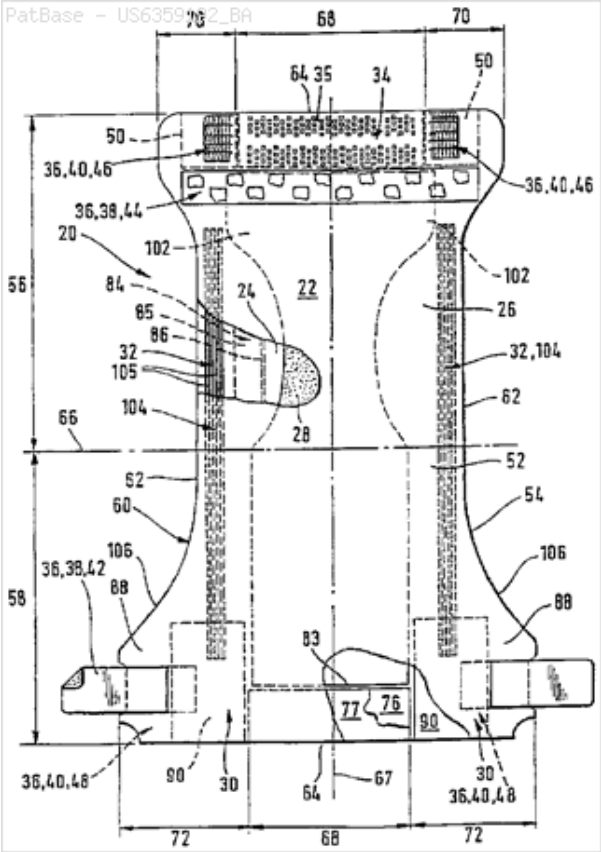


**Family:**

| Publication number | Publication date | Application number | Application date |
|---|---|---|---|
| AT229311 E | 20021215 | AT19970919980T | 19970327 |
| AU199724285 A1 | 19981022 | AU19970024285 | 19970327 |
| BRPI9714655 A | 20000711 | BR1997PI14655 | 19970327 |
| CA2284938 AA | 19990924 | CA19972284938 | 19970327 |
| CO4650275 A1 | 19980903 | CO19980016984 | 19980326 |
| DE69717866 D1 | 20030123 | DE19976017866 | 19970327 |
| DE69717866 T2 | 20030508 | DE19976017866T | 19970327 |
| EG21960 A | 20020430 | EG19980000336 | 19980325 |
| EP0980231 A1 | 20000223 | EP19970919980 | 19970327 |
| EP0980231 B1 | 20021211 | EP19970919980 | 19970327 |
| ES2187772 T3 | 20030616 | ES19970919980T | 19970327 |
| HU0002658 AB | 20001228 | HU20000002658 | 19970327 |
| HU0002658 AC | 20010129 | HU20000002658 | 19970327 |
| ID20395 A | 19981203 | ID19980000437 | 19980326 |
| IL132070 A0 | 20010319 | IL19970132070 | 19970327 |
| JP2000510367 T2 | 20000815 | JP19980541575T | 19970327 |
| JP3784839 B2 | 20060614 | JP19980541575 | 19970327 |
| KR20010005750 A | 20010115 | KR19997008821 | 19990927 |

| | | | |
|---|---|---|---|
| MX218709 B | 20040116 | MX19990008877 | 19990927 |
| MX218709 B | 20040116 | MX19990008877 | 19970327 |
| MX9908877 A1 | 19991201 | MX19990008877 | 19970327 |
| NO994651 A | 19991126 | NO19990004651 | 19990924 |
| NO994651 A0 | 19990924 | NO19990004651 | 19990924 |
| PE21598 A1 | 19990826 | PE19980000215 | 19980325 |
| TR9902832 T2 | 20000921 | TR19990002832T | 19970327 |
| TW359609 B | 19990601 | TW19980105324 | 19980409 |
| US6359192 BA | 20020319 | US19990381926 | 19990927 |
| WO9843580 A1 | 19981008 | WO1997US05234 | 19970327 |
| ZA9802257 A | 19980917 | ZA19980002257 | 19980317 |

**Priority:**

WO1997US05234 19970327 US19970005234 19970327

**Probable Assignee:** PROCTER AND GAMBLE CO

**Assignee(s):** (std)**:** EHRNSPERGER BRUNO JOHANNES ; LAVON GARY DEAN ; NEUMANN FRANK ; PROCTER AND GAMBLE ; SCHMIDT MATTIAS ; PALUMBO GIANFRANCO ; YOUNG GERALD ALFRED

**Assignee(s):** THE PROCTOR AND GAMBLE COMPANY ; THE PROCTER AND GAMBLE CO CINCINNATI OHIO ; THE PROCTER AND GAMBLE COMPANY ; THE PROCTER AND GAMBLE COMPANYUS ; THE PROCTER AND GAMBLE COMPANY CINCINNATI ; PROCTER AND GAMBLE CO ; THE PROCTER AND GAMBLE CO

**Inventor(s):** (std)**:** YOUNG GERALD ALFRED ; YOUNG GERALD A ; YOUNG ALFRED ; PALUMBO GIANFRANCO ; NEUMANN FRANK ; LAVON GARY DEAN ; LAVON GARY D ; LAVON DEAN ; EHRNSPERGER JOHANNES ; EHRNSPERGER BRUNO JOHANNES ; YOUNG GERALD ; SCHMIDT MATTIAS ; LAVON GARY ; EHRNSPERGER BRUNO ; DEAN LAVON GARY

**Inventor(s):** YOUNG GERALDALFRED ; BRUNO JOHANNES EHRNSPERGER ; EHRNSPERGER BRUNOJOHANNES ; GIANFRANCO PALUMBO ; GERALD ALFRED YOUNG ; GARY DEAN LAVON ; FRANK NEUMANN ; MATTIAS SCHMIDT ; LAVON GARYDEAN ; LAVON GARY DENA

**Agent(s):** SIM AND MCBURNEY; CARLOS REINALDO OLARTE GARCIA

**Designated states:** AL AM AT AU AZ BA BB BE BF BG BJ BR BY CA CF CG CH CI CM CN CU CZ DE DK EE ES FI FR GA GB GE GH GN GR HU IE IL IS IT JP KE KG KP KR KZ LC LI LK LR LS LT LU LV MC MD MG MK ML MN MR MW MX NE NL NO NZ PL PT RO RU SD SE SG SI SK SN SZ TD TG TJ TM TR TT UA UG US UZ VN YU

**15) Family number: 20659308** (ZA9803401A) © PatBase

**Title:** **Absorbent** **articles** having lotioned leg cuffs containing a polysiloxane emollient


**Abstract:**
An **absorbent** **article**, such as a diaper, containing leg cuffs coated with a lotion composition is disclosed. The lotions disclosed in the present invention minimize the abrasion between the cuffs and skin in the area where the cuffs contact the wearer's skin, resulting in less skin irritation. The lotion compositions also reduce the adherence of BM to the skin of the wearer, thereby improving the ease of BM clean up. The lotion composition comprises a plastic or fluid polysiloxane emollient such as phenyl-functional polymethylsiloxanes, an immobilizing agent such as a fatty alcohol or paraffin wax to immobilize the emollient on the surface of the diaper leg cuffs, and optionally a hydrophilic surfactant to improve the processability and/or stability of the lotion compositions. Because the polysiloxane emollient is substantially immobilized on the surface of the leg cuff, less lotion is required to impart the desired therapeutic or protective lotion coating benefits.


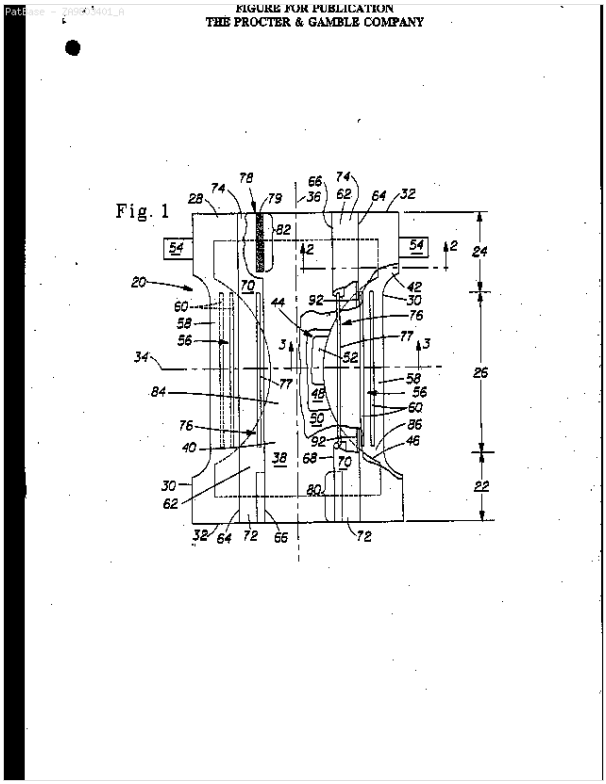


**Classifications:**
**International (IPC 8-9):** A61F13/15 A61F13/494 A61F13/76 A61F5/44 A61L15/22 A61L15/26 A61L15/34 A61L15/46 C08L83/04 (Advanced/Invention);
A61F13/15 A61F5/44 A61L15/26 (Advanced/Non-invention);
A61F13/15 A61F5/44 A61L15/16 C08L83/00 (Core/Invention);
A61F13/15 A61F13/76 (Core/Non-invention)
**International (IPC 1-7):** A61F13/15 A61F13/494 A61F13/76 A61F5/44 A61L15/22 A61L15/26 A61L15/34 A61L15/46 A61L15/50 C08L83/04
**CPC:** A61L15/225 A61L15/26 A61L15/46 A61L2300/30 A61L2300/802
**European:** A61L15/22M A61L15/26 A61L15/46 K61L300/300 K61L300/802

**Family:**

| Publication number | Publication date | Application number | Application date |
|---|---|---|---|
| AR015594 AA | 20010516 | AR1998P101887 | 19980423 |
| AU199867439 A1 | 19981113 | AU19980067439 | 19980423 |
| BRPI9810929 A | 20000926 | BR1998PI10929 | 19980423 |
| CA2285620 AA | 19991014 | CA19982285620 | 19980423 |
| CN1257433 A | 20000621 | CN19988005464 | 19980423 |
| CO5040080 A1 | 20010529 | CO19980022675 | 19980424 |
| EP0977603 A1 | 20000209 | EP19980912678 | 19980423 |
| HU0001235 AB | 20000828 | HU20000001235 | 19980423 |
| ID24052 A | 20000706 | ID19990001273 | 19980423 |
| IL132321 A0 | 20010319 | IL19980132321 | 19980423 |
| JP2000510371 T2 | 20000815 | JP19980545357T | 19980423 |
| KR20010012103 A | 20010215 | KR19997009805 | 19991022 |
| NO995166 A | 19991227 | NO19990005166 | 19991022 |
| NO995166 A0 | 19991022 | NO19990005166 | 19991022 |
| PE83599 A1 | 19991015 | PE19980000306 | 19980424 |
| TH33672 A | 19990702 | TH19981001428 | 19980422 |

| | | | |
|---|---|---|---|
| TR9902610 T2 | 20000221 | TR19990002610T | 19980423 |
| TW366281 B | 19990811 | TW19980116224 | 19980930 |
| WO9847546 A1 | 19981029 | WO1998IB00618 | 19980423 |
| ZA9803401 A | 19981027 | ZA19980003401 | 19980422 |

**Priority:**

US19970840039 19970424 WO1998IS00618 19980423 WO1998IB00618 19980423

**Probable Assignee:** PROCTER AND GAMBLE

**Assignee(s):** (std)**:** PROCTER AND GAMBLE ; THE PROCTER AND GAMBLE CO ; THE PROCTER AND GAMBLE COMPANY

**Assignee(s):** THE PROCTER AND GAMBLE COMPANYUS ; VANRIJSWIJCK LAURA GRAVES SPALDING ; PROCTER AND GAMBLE CO ; ROE DONALD CARROLL ; SCHULTE THOMAS EDWARD ; HERSKO BART STEVEN

**Inventor(s):** (std)**:** DONALD CARROLL ROE ; GRAVES SPALDING VANRIJSWIJCK LAURA ; HERSKO BARD STEVEN ; HERSKO BART STEVEN ; LAURA G S VANRIJSWIJCK ; LAURA GRAVES SPALDING VANRIJSWIJCK ; ROE DONALD CAROLL ; ROE DONALD CARROL ; ROE DONALD CARROLL ; SCHULTE THOMAS ; SCHULTE THOMAS EDWARD ; THOMAS E SCHULTE ; THOMAS EDWARD SCHULTE ; BART STEVEN HERSKO ; DANALD C ROE ; VANRIJSWIJCK LAURA GRAVES SPAL ; VANRIJSWIJCK LAURA GRAVES SPALDING ; VANRIJSWIJCK LAURA G S ; SCHULTE THOMAS E ; ROE DANALD C

**Inventor(s):** BARD STEVEN HERSKO ; VANRIJSWIJCK LAURA GRAVES S ; DONALD CARROL ROE ; THOMAS SCHULTE

**Agent(s):** SIM AND MCBURNEY; CARLOS REINALDO OLARTE GARCIA

**Designated states:** AL AM AT AU AZ BA BB BE BF BG BJ BR BY CA CF CG CH CI CM CN CU CY CZ DE DK EE ES FI FR GA GB GE GH GM GN GR GW HU ID IE IL IS IT JP KE KG KP KR KZ LC LI LK LR LS LT LU LV MC MD MG MK ML MN MR MW MX NE NL NO NZ PL PT RO RU SD SE SG SI SK SL SN SZ TD TG TJ TM TR TT UA UG UZ VN YU ZW

**16) Family number: 20674745** (ZA9805672A) © PatBase

**Title:** Multi-directionally extensible sanitary napkin.

**Abstract:**
Multi-directionally extensible **absorbent** **articles** for wearing in an undergarment, such as sanitary napkins, panty liners, incontinence pads, and the like, are disclosed. Multi-directionally extensible **absorbent** **cores**, and omni-directionally extensible **absorbent** **cores** for such **absorbent** **articles** are also disclosed. The **absorbent** **articles** with the omni-directionally extensible **absorbent** **core** are provided with an overall diagonal extensibility to accommodate the forces exerted on the **absorbent** **article** by the wearer's undergarments when the wearer walks, and otherwise moves about. The **absorbent** **articles** may also be provided with regions of extensibility that are oriented in certain directions to reduce the forces acting on the **absorbent** **article** when worn.

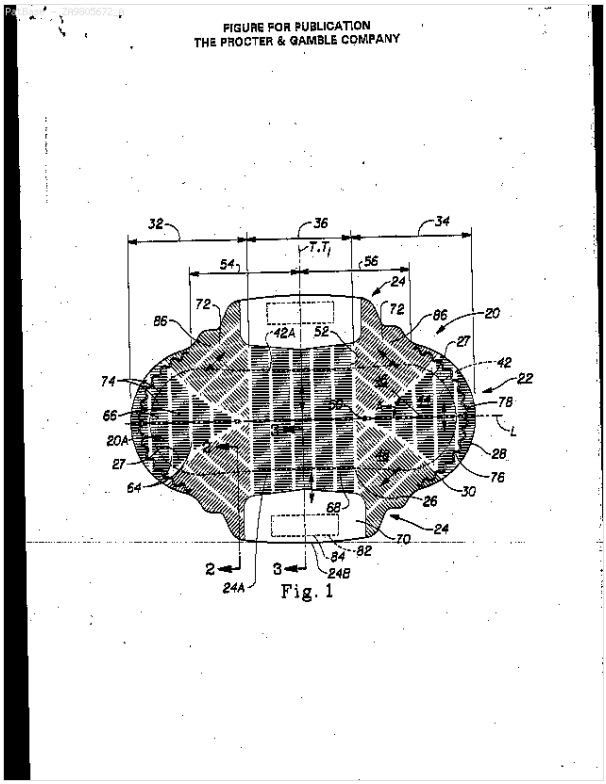


**Classifications:**
**International (IPC 8-9):** A61F13/15 A61F13/49 A61F13/53 A61F13/534 (Advanced/Invention); A61F13/15 (Advanced/Non-invention)
**International (IPC 1-7):** A61F13/15 A61F13/49 A61F13/53 A61F13/534
**CPC:** A61F13/15203 A61F13/47209 A61F13/47218 A61F13/47263 A61F13/476 A61F13/49009 A61F13/4902 A61F13/511 A61F13/51466 A61F13/53 A61F2013/530664
**European:** A61F13/15C3 A61F13/15J A61F13/472B A61F13/472D A61F13/476 A61F13/49D2 A61F13/49D2H A61F13/511 A61F13/514B2A A61F13/53 K61F13/472A K61F13/53Q4F

**Family:**

| Publication number | Publication date | Application number | Application date |
|---|---|---|---|
| AT227554 E | 20021115 | AT19980931741T | 19980630 |
| AU199881782 A1 | 19990119 | AU19980081782 | 19980630 |
| BRPI9810224 A | 20000808 | BR1998PI10224 | 19980630 |
| CA2294273 AA | 19991222 | CA19982294273 | 19980630 |
| CA2294273 C | 20040413 | CA19982294273 | 19980630 |
| CN1267209 A | 20000920 | CN19988008233 | 19980630 |
| DE69809425 D1 | 20021219 | DE19986009425 | 19980630 |
| DE69809425 T2 | 20030508 | DE19986009425T | 19980630 |
| EP0994686 A1 | 20000426 | EP19980931741 | 19980630 |
| EP0994686 B1 | 20021113 | EP19980931741 | 19980630 |
| ID25911 A | 20001109 | ID19990001718 | 19980630 |
| JP2002515817 T2 | 20020528 | JP19990509841T | 19980630 |
| KR20010014401 A | 20010226 | KR19997012580 | 19991230 |
| TH34319 A | 19990806 | TH19981002446 | 19980629 |
| WO9900095 A1 | 19990107 | WO1998US13613 | 19980630 |
| ZA9805672 A | 19991125 | ZA19980005672 | 19980629 |

**Priority:**
US19970886055 19970630 WO1998US13613 19980630

**Probable Assignee:** PROCTER AND GAMBLE

**Assignee(s):** (std)**:** PROCTER AND GAMBLE

**Assignee(s):** PROCTER AND GAMBLE CO ; THE PROCTER AND GAMBLE COMPANY ; THE PROCTER AND GAMBLE COMPANY CINCINNATI ; THE PROCTER AND GAMBLE CO ; WILKINS LESLIE ANNE ; WEINBERGER ERIC PATTON ; AHR NICHOLAS ALBERT ; ARROYO ENID VANESSA ; HERSHBERGER MICHAEL NYLE ; HINES LETHA MARGIE ; OSBORN THOMAS WARD III ; PATTERSON REBECCA WHITE

**Inventor(s):** (std)**:** AHR ALBERT ; AHR NICHOLAS ALBER ; AHR NICHOLAS ALBERT ; AHR NICOLHAS ALBERT ; ARROYO ENID VANESSA ; ARROYO VANESSA ; HERSHBERGER MICHAEL NYLE ; HERSHBERGER NYLE ; HINES LETHA MARGIE ; HINES MARGIE ; OSBORN III THOMAS WARD ; OSBORN THOMAS WARD ; OSBORN THOMAS WARD III ; OSBORN WARD ; PATTERSON REBACCA WHITE ; PATTERSON REBECCA WHITE ; PATTERSON WHITE ; WEINBERGER ERIC PATON ; WEINBERGER ERIC PATTON ; WEINBERGER PATTON ; WILKINS ANNE ; WILKINS LESLIE ANN ; WILKINS LESLIE ANNE ; PATTERSON REBECCA W ; OSBORN THOMAS W III ; HERSHBERGER MICHAEL N

**Inventor(s):** LESLIE ANN WILKINS ; III THOMAS WARD OSBORN ; REBACCA WHITE PATTERSON ; REBECCA W PATTERSON ; REBECCA WHITE PATTERSON ; THOMAS W OSBORN III ; THOMAS WARD OSBORN ; THOMAS WARD OSBORN III ; LESLIE ANNE WILKINS ; LETHA MARGIE HINES ; MICHAEL N HERSHBERGER ; MICHAEL NYLE HERSHBERGER ; NICHOLAS ALBER AHR ; NICHOLAS ALBERT AHR ; NICOLHAS ALBERT AHR ; ENID VANESSA ARROYO ; ERIC PATON WEINBERGER ; ERIC PATTON WEINBERGER

**Agent(s):** WATERMARK PATENT AND TRADE MARKS ATTORNEYS; SIM AND MCBURNEY

**Designated states:** AL AM AT AU AZ BA BB BE BF BG BJ BR BY CA CF CG CH CI CM CN CU CY CZ DE DK EE ES FI FR GA GB GE GH GM GN GR GW HU ID IE IL IS IT JP KE KG KP KR KZ LC LI LK LR LS LT LU LV MC MD MG MK ML MN MR MW MX NE NL NO NZ PL PT RO RU SD SE SG SI SK SL SN SZ TD TG TJ TM TR TT UA UG UZ VN YU ZW

**17) Family number: 29596778** (US6120783A) © PatBase

**Title:** Web materials with **two** or more skin care compositions disposed thereon and articles made therefrom

**Abstract:**
Source: US6120783A Web materials which have **two** or more skin care compositions disposed thereon. The skin care compositions are transferable to the wearer's skin by normal contact and/or wearer motion and/or body heat. The skin care compositions disclosed in the present invention are selected to maintain and/or improve the skin health of the wearer upon transfer during use, for example, to provide a skin protective barrier or a therapeutic benefit; to minimize the abrasion between the cuffs and skin in the area where the cuffs contact the wearer's skin, resulting in less skin irritation; to improve BM clean up on the skin, or to improve the barrier properties of the cuffs. Web materials of the present invention have a wide range of potential uses in both durable and disposable articles, but are particularly well suited for use in disposable **absorbent** **articles** such as disposable diapers, incontinent briefs, training pants, sanitary napkins, and the like.

**Classifications:**
**International (IPC 8-9):** A61F13/15 A61F13/472 A61F13/49 A61F13/511 A61F5/44 A61L15/16 D06M13/00 (Advanced/Invention); A61F13/15 A61F5/44 D06M13/00 (Advanced/Non-invention); A61F13/15 A61F5/44 D06M13/00 (Core/Invention)
**International (IPC 1-7):** A61F13/15 A61F13/472 A61F13/49 A61F13/511 A61F5/44 A61K9/70 A61L15/16 D06M13/00
**CPC:** A61F13/8405
**European:** A61F13/84B
**US:** 424/402 424/404 424/443 604/364

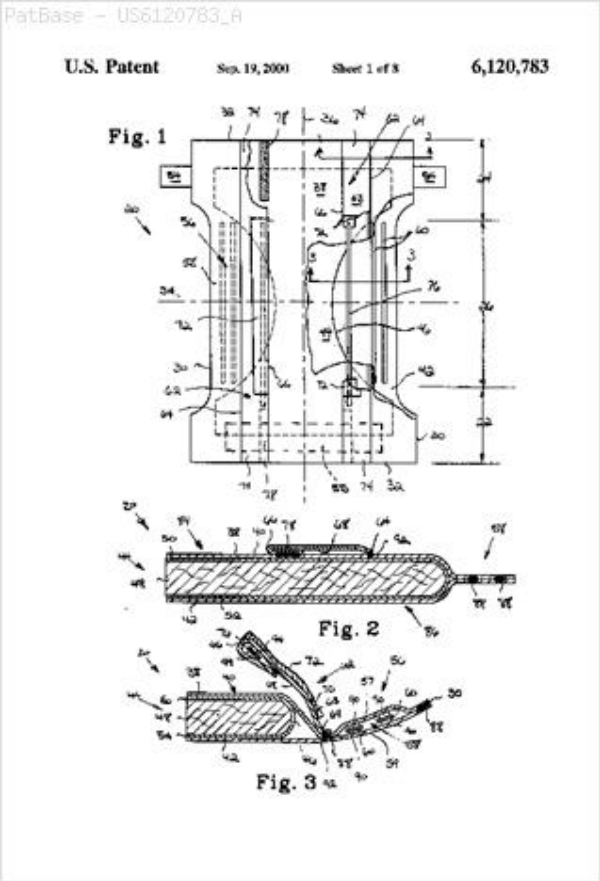


**Family:**

| Publication number | Publication date | Application number | Application date |
|---|---|---|---|
| AR017178 AA | 20010822 | AR1998P105467 | 19981030 |
| AT247445 E | 20030915 | AT19980952373T | 19981019 |
| AU199898091 A1 | 19990524 | AU19980098091 | 19981019 |
| BRPI9814836 A | 20001003 | BR1998PI14836 | 19981019 |
| CA2305551 AA | 20000403 | CA19982305551 | 19981019 |
| CA2305551 C | 20040525 | CA19982305551 | 19981019 |
| CN1283094 A | 20010207 | CN19988012659 | 19981019 |
| CN1315446 C | 20070516 | CN19988012659 | 19981019 |
| CO5070626 A1 | 20010828 | CO19980064545 | 19981103 |
| DE69817388 D1 | 20030925 | DE19986017388 | 19981019 |
| DE69817388 T2 | 20040624 | DE19986017388T | 19981019 |
| EG22469 A | 20030226 | EG19980001339 | 19981031 |
| EP1027022 A1 | 20000816 | EP19980952373 | 19981019 |
| EP1027022 B1 | 20030820 | EP19980952373 | 19981019 |
| ES2205564 T3 | 20040501 | ES19980952373T | 19981019 |
| IL135455 A0 | 20010520 | IL19980135455 | 19981019 |
| JP2001521994 T2 | 20011113 | JP20000518625T | 19981019 |

| | | | |
|---|---|---|---|
| JP4463419 B2 | 20100519 | JP20000518625T | 19981019 |
| KR100476911 B1 | 20050317 | KR20007004658 | 20000428 |
| KR20010031607 A | 20010416 | KR20007004658 | 20000428 |
| PE126599 A1 | 20000213 | PE19980001001 | 19981023 |
| TH34274 A | 19990806 | TH19981004174 | 19981029 |
| TW539554 B | 20030701 | TW19980118141 | 19990208 |
| US6120783 A | 20000919 | US19970961879 | 19971031 |
| US6290979 BA | 20010918 | US20000533005 | 20000322 |
| WO9922684 A1 | 19990514 | WO1998US22057 | 19981019 |
| ZA9809697 A | 19990429 | ZA19980009697 | 19981023 |

**Priority:**

US19970961879 19971021 US19970961879 19971031 WO1998US22057 19981019
KR20007004658 20000428 US20000533005 20000322

**Probable Assignee:** PROCTER AND GAMBLE

**Assignee(s):** (std)**:** PROCTER AND GAMBLE ; THE PROCTER AND GAMBLE COMPANY ; PROCTER AND GAMBLE CO

**Assignee(s):** ROE DONALD CARROLL ; VANRIJSWIJCK LAURA GRAVES SPALDING ; SCHULTE THOMAS EDWARD ; THE PROCTER AND GAMBLE CO ; THE PROCTER AND GAMBLE COMPANY CINCINNATI ; ELDER GRETCHEN LOUISE ; GAMBLE CO ; MILLER STEVEN WORTHINGTON ; PROCTER AND

**Inventor(s):** (std)**:** DONALD CAROLL ROE ; DONALD CARROLL ROE ; ELDER GRETCHEN L ; ELDER GRETCHEN LOUISE ; ELDER LOUISE ; GRAVES SPALDING VANRIJSWIJCK LAURA ; GRETCHEN L ELDER ; GRETCHEN LOUISE ELDER ; HULTE THOMAS EDWARD ; LAURA GRAVES SPALDING VANRIJSWIJCK ; MILLER STEVEN ; MILLER STEVEN WORTHINGTON ; MILLER STEVEN WORTHINTON ; MILLER WORTHINGTON ; ROE CARROLL ; ROE DONALD C ; ROE DONALD CAROLL ; ROE DONALD CARROLL ; SCHULTE DONALD C ROE GRETCHEN ; SCHULTE EDWARD ; SCHULTE THOMAS E ; SCHULTE THOMAS EDWARD ; SPALDING VAN RIJSWIJCK LAURA G ; STEVEN WORTHINGTON MILLER ; STEVEN WORTHINTON MILLER ; THOMAS E SCHULTE ; THOMAS EDWARD SCHULTE ; VAN RIJSWIJCK LAURA GRAVES SPALDING ; VANRIJSWIJCK GRAVES ; VANRIJSWIJCK LAURA ; DONALD C ROE ; VANRIJSWIJCK LAURA GRAVES SPAL ; VANRIJSWIJCK LAURA GRAVES SPALDING

**Inventor(s):** DONALD C ROE GRETCHEN L ELDER THOMAS E SCHULTE ; VANRIJSWIJCK LAURA GRAVES ; THOMAS EDWARD HULTE ; SPALDING VAN RIJSWIJCK LAURA GRAVES

**Agent(s):** SIM AND MCBURNEY; CARLOS REINALDO OLARTE GARCIA

**Designated states:** AL AM AT AU AZ BA BB BE BF BG BJ BR BY CA CF CG CH CI CM CN CU CY CZ DE DK EE ES FI FR GA GB GE GH GM GN GR GW HR HU ID IE IL IS IT JP KE KG KP KR KZ LC LI LK LR LS LT LU LV MC MD MG MK ML MN MR MW MX NE NL NO NZ PL PT RO RU SD SE SG SI SK SL SN SZ TD TG TJ TM TR TT UA UG UZ VN YU ZW

**18) Family number: 29991091** (US6083211A) © PatBase

**Title:** High suction polymeric foam materials

**Abstract:** Source: US6083211A Disclosed are polymeric foam structures suitable for absorbing and storing body fluids such as urine, menses and the like. These liquid storage structures are high suction collapsible polymeric foam materials. The collapsed foams, upon contact with aqueous fluids, can absorb and expand these fluids even when opposed by significant hydrostatic pressures. These absorbent polymeric foams comprise interconnected open-cells. In one aspect, the foams can absorb at least about 25 g/g against a hydrostatic head pressure of 50 cm. In another aspect, the foams of the present invention will have a vertical hang sorption height at 90 percent of at least about 60 cm.

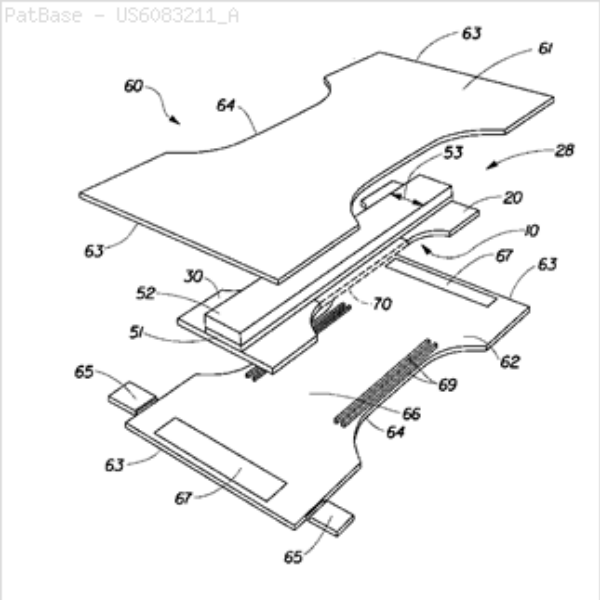


**Classifications:**
**International (IPC 8-9):** A61F13/15 A61F13/49 A61F13/53 A61F5/44 A61L15/42 A61L15/60 B32B3/12 B32B3/26 C08F2/32 C08F36/00 C08J9/00 C08J9/02 (Advanced/Invention); A61F5/44 A61L15/42 (Advanced/Non-invention); A61F13/15 A61F5/44 A61L15/16 C08F2/32 C08J9/00 (Core/Invention)
**International (IPC 1-7):** A61F13/15 A61F13/49 A61F13/53 A61F5/44 A61L15/42 A61L15/60 B32B3/12 B32B3/26 C08F120/10 C08F2/32 C08F36/00 C08J9/00 C08L23/00
**CPC:** A61L15/425 C08F2/32
**European:** A61L15/42E C08F2/32
**US:** 604/358 604/367 604/369 604/385.1 604/385.21

**Family:**

| Publication number | Publication date | Application number | Application date |
|---|---|---|---|
| AR015245 AA | 20010418 | AR1999P101055 | 19990311 |
| AT255916 E | 20031215 | AT19990906375T | 19990312 |
| AU199926336 A1 | 19991011 | AU19990026336 | 19990312 |
| BRPI9908686 A | 20001219 | BR1999PI08686 | 19990312 |
| CA2322524 AA | 20000907 | CA19992322524 | 19990312 |
| CA2322524 C | 20050705 | CA19992322524 | 19990312 |
| CN1299292 A | 20010613 | CN19998005873 | 19990312 |
| CO5121076 A1 | 20020130 | CO19990015464 | 19990312 |
| CZ20003300 A3 | 20010411 | CZ20000003300 | 19990312 |
| DE69913505 D1 | 20040122 | DE19996013505 | 19990312 |
| DE69913505 T2 | 20041118 | DE19996013505T | 19990312 |
| EG22177 A | 20021031 | EG19990000255 | 19990313 |
| EP1064030 A1 | 20010103 | EP19990906375 | 19990312 |
| EP1064030 B1 | 20031210 | EP19990906375 | 19990312 |
| ES2209401 T3 | 20040616 | ES19990906375T | 19990312 |
| HU0101037 AB | 20010730 | HU20010001037 | 19990312 |
| HU0101037 AC | 20021028 | HU20010001037 | 19990312 |
| IL138148 A0 | 20011031 | IL19990138148 | 19990312 |
| JP2002506889 T2 | 20020305 | JP20000536422T | 19990312 |
| JP2010090388 A2 | 20100422 | JP20090280342 | 20091210 |

| | | | |
|---|---|---|---|
| KR20010041849 A | 20010525 | KR20007010139 | 20000914 |
| MX230660 B | 20050915 | MX2000PA08961 | 20000913 |
| MXPA00008961 A1 | 20010501 | MX2000PA08961 | 20000913 |
| PE05282000 A1 | 20000803 | PE19990000210 | 19990315 |
| TH36323 A | 19991217 | TH19991000819 | 19990312 |
| TR200002629 T2 | 20001121 | TR20000002629T | 19990312 |
| US6083211 A | 20000704 | US19980042429 | 19980313 |
| WO9947183 A1 | 19990923 | WO1999IB00404 | 19990312 |
| ZA9901990 A | 19990913 | ZA19990001990 | 19990311 |

**Priority:**

US19980042429 19980313 CZ20000003300 19990312 JP20000536422 19990312
WO1999IB00404 19990312

**Probable Assignee:** PROCTER AND GAMBLE CO

**Assignee(s):** (std)**:** PROCTER AND GAMBLE ; PROCTER AND GAMBLE CO ; THE PROCTER AND GAMBLE COMPANY

**Assignee(s):** THE PROCTER AND GAMBLE COMPANY CINCINNATI ; DESMARAIS THOMAS ALLEN ; THE PROCTER AND GAMBLE CO ; THE PROCTER AND GAMBLE CO CINCINNATI OHIO

**Inventor(s):** (std)**:** DESMARAIS ALLEN ; DESMARAIS THOMAS A ; THOMAS ALLEN DESMARAIS ; THOMAS A DESMARAIS ; DESMARAIS THOMAS ALLEN

**Agent(s):** DIMOCK STRATTON LLP; CARLOS REINALDO OLARTE GARCIA

**Designated states:** AL AM AT AU AZ BA BB BE BF BG BJ BR BY CA CF CG CH CI CM CN CU CY CZ DE DK EE ES FI FR GA GB GD GE GH GM GN GR GW HR HU ID IE IL IN IS IT JP KE KG KP KR KZ LC LI LK LR LS LT LU LV MC MD MG MK ML MN MR MW MX NE NL NO NZ PL PT RO RU SD SE SG SI SK SL SN SZ TD TG TJ TM TR TT UA UG UZ VN YU ZW

**19) Family number: 59292595** (TW508232B) © PatBase

**Title:** **Absorbent** **articles** having cuffs with skin care composition disposed thereon

**Abstract:**
Source: TW508232B An **absorbent** **article**, such as a diaper, containing cuffs with a skin care composition disposed thereon. The skin care composition disposed on the cuffs is transferable to the wearers skin by normal contact and/or wearer motion and/or body heat. The skin care compositions disclosed in the present invention are selected to maintain and/or improve the skin health of the wearer upon transfer during use, for example, to provide a skin protective barrier or a therapeutic benefit; to minimize the abrasion between the cuffs and skin in the area where the cuffs contact the wearers skin, resulting in less skin irritation; to improve bowel movement (hereinafter referred to as "BM") clean up on the skin, or to improve the barrier properties of the cuffs.

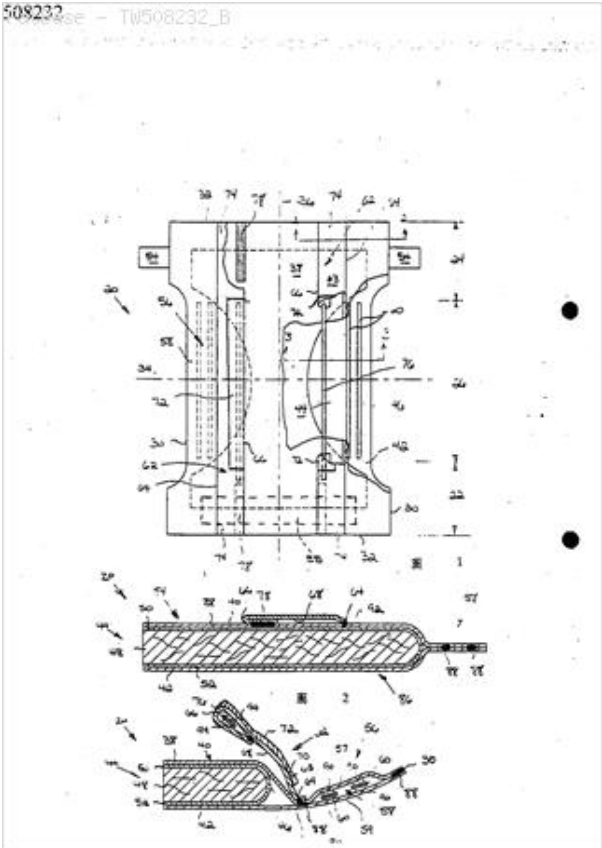

**Classifications:**
**International (IPC 8-9):** A01N25/34 A61F13/00 A61F13/15 A61F13/472 A61F13/49 A61F13/494 A61F5/44 A61K8/02 A61L15/16 A61L15/34 A61L15/40 A61L15/48 A61Q19/00 D06M13/02 (Advanced/Invention);
A61F13/15 A61F5/44 A61K8/02 A61L15/16 A61Q19/00 D06M13/00 (Core/Invention);
A61F (Subclass/Invention)
**International (IPC 1-7):** A61F13/15 A61F13/472 A61F13/49 A61F13/494 A61F5/44 A61L15/34 A61L15/48
**CPC:** A61F13/494 A61F13/49406 A61F13/49466 A61F13/8405 A61K8/0208 A61L15/34 A61L15/40 A61K2800/75 A61Q19/00

**Family:**

| Publication number | Publication date | Application number | Application date |
|---|---|---|---|
| CN1121241 C | 20030917 | CN19971081502 | 19971203 |
| CN1251534 A | 20000426 | CN19971081502 | 19971203 |
| CO4910110 A1 | 20000424 | CO19970070822 | 19971203 |
| CZ297044 B6 | 20060816 | CZ19990001994 | 19971203 |
| CZ9901994 A3 | 19991117 | CZ19990001994 | 19971203 |
| JP2002509457 T2 | 20020326 | JP19980525776T | 19971203 |
| JP3768245 B2 | 20060419 | JP19980525776T | 19971203 |
| MY120713 A | 20051130 | MY19970005797 | 19971203 |
| TR9901797 T2 | 19991021 | TR19990001797T | 19971203 |
| TW508232 B | 20021101 | TW19980100982 | 19980123 |

**Priority:**
US19960766386 19961203 US19970962310 19971031 US19970962312 19971031

**Probable Assignee:** PROCTER AND GAMBLE

**Assignee(s):** (std): PROCTER AND GAMBLE ; PROCTER AND GAMBLE CO

**Assignee(s):** THE PROCTER AND GAMBLE CO ; THE PROCTER AND GAMBLE COMPANY

**Inventor(s):** (std): EDWARD SCHULTE THOMAS ; EDWARD THOMAS ; ELDER GRETCHEN ; ELDER

GRETCHEN LOUISE ; GRAVES SPALDING VANRIJSWIJCK LAURA ; LOUISE ELDER GRETCHEN ; ROE DONALD C ; ROE DONALD CARROLL ; SCHULTE THOMAS EDWARD ; SCHULTE THOMS E ; SPALDING VANRIJSWIJCK LAURA GRAVES ; AL LAURA G S VANRIJSWIJACK ET ; CARROLL ROE DONALD ; VANRIJSWIJACK LAURA G S ; VANRIJSWIJCK LAURA GRAVES SPAL

**Inventor(s):** VANRIJSWIJCK LAURA GRAVES SPALDING ; DONALD C ROE ; DONALD CARROLL ROE ; THOMAS EDWARD ; THOMAS EDWARD SCHULTE ; THOMS E SCHULTE ; GRETCHEN LOUISE ELDER ; LAURA G S VANRIJSWIJACK ; LAURA G S VANRIJSWIJACK ET AL ; LAURA GRAVES SPALDING VANRIJSWIJCK

**Agent(s):** ALVARO CORREA ORDONEZ

**20) Family number: 40485836** (PE102299A) © PatBase

**Title:** AYUDA PARA EL MANIPULEO DE UN ARTICULO ABSORBENTE DESECHABLE APLICADO AL CUERPO

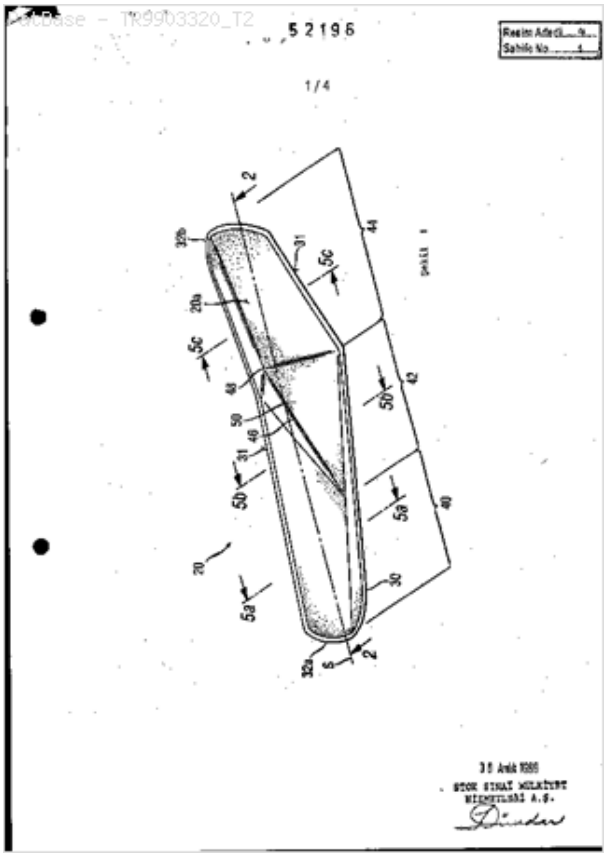


**Abstract:**
Source: PE102299A SE REFIERE A UN ARTICULO ABSORBENTE DESECHABLE HECHO PARA LA APLICACION DIRECTA AL CUERPO DEL USUARIO, QUE TIENE UN LADO MIRANDO AL CUERPO Y UN LADO MIRANDO A LA PRENDA, UN PLANO DE SIMETRIA LONGITUDINAL, UN BORDE DEL EXTREMO DELANTERO Y UN BORDE DEL EXTREMO POSTERIOR; Y CUENTA CON UNA LAMINA SUPERIOR PERMEABLE AL AGUA, UNA LAMINA POSTERIOR UNIDA A LA LAMINA SUPERIOR Y UN NUCLEO ABSORBENTE ENTRE DICHAS LAMINAS SUPERIOR Y POSTERIOR; Y CUENTA ADEMAS CON MEDIOS PARA SUJETAR Y APLICAR EL ARTICULO AL CUERPO DEL USUARIO, QUE SE UBICAN EN EL LADO MIRANDO A LA PRENDA DEL ARTICULO ABSORBENTE Y ESTAN ORIENTADOS TRANSVERSALMENTE PARA PERMITIR LA INSERCION DE POR LO MENOS UN DEDO DEL USUARIO PARA SUJETAR Y APLICAR EL ARTICULO ABSORBENTE. TIENE APLICACION EN LA FABRICACION DE ARTICULOS ABSORBENTES DESECHABLES TALES COMO TOALLAS HIGIENICAS, INSERTOS DE INCONTINENCIA Y SIMILARES A disposable **absorbent article** intended for direct application to the user's body, having a body facing surface and a garment facing surface, a longitudinal symmetry plane, a front end edge and a rear end edge, and comprising a liquid pervious topsheet, a backsheet joined to said topsheet and an **absorbent core** intermediate the backsheet and the topsheet. The disposable **absorbent article** comprises means for holding and applying the article to the user's body. The means are located on the garment facing surface of the **absorbent article**, and are oriented transversely to allow the insertion of at least one user's finger for holding and applying the **absorbent article**.

**Classifications:**
**International (IPC 8-9):** A61F13/00 A61F13/15 A61F13/472 A61F13/56 A61F13/82 (Advanced/Invention)
**International (IPC 1-7):** A61F13/15 A61F13/56
**CPC:** A61F13/47227 A61F13/47263 A61F13/4758 A61F13/5611 A61F13/82 A61F13/84 A61F2013/455 A61F2013/4568
**European:** A61F13/472B1 A61F13/472D A61F13/475B A61F13/56B2 A61F13/82 A61F13/84 K61F13/45C3A K61F13/45C4

**Family:**

| Publication number | Publication date | Application number | Application date |
|---|---|---|---|
| AR016300 AA | 20010704 | AR1998P103201 | 19980701 |
| CO5060494 A1 | 20010730 | CO19980037131 | 19980701 |
| PE102299 A1 | 19991210 | PE19980000586 | 19980701 |
| TR9903320 T2 | 20000921 | TR19990003320T | 19980629 |

**Priority:**
EP19970110734 19970701

**Probable Assignee:** PROCTER AND GAMBLE

**Assignee(s):** (std): PROCTER AND GAMBLE

**Assignee(s):** PROCTER AND GAMBLE CO ; THE PROCTER AND GAMBLE CO ; THE PROCTER AND GAMBLE COMPANY

**Inventor(s):** (std)**:** ARESKOUG ALOIS ; WIERLACHER STEFAN ALOIS

**Inventor(s):** ALOIS ARESKOUG ; STEFAN ALOIS WIERLACHER

**Agent(s):** CARLOS REINALDO OLARTE GARCIA

**21) Family number: 40485835** (PE102199A)

© PatBase

**Title:** ARTICULOS ABSORBENTES DESECHABLES QUE TIENEN UN MEJOR AJUSTE A LA ANATOMIA DEL CUERPO

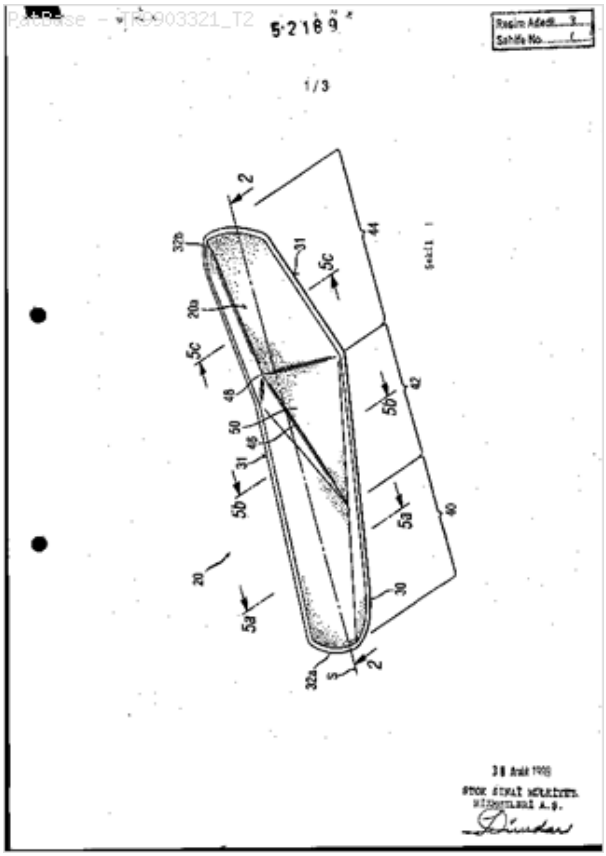


**Abstract:**
Source: PE102199A QUE POSEEN UN LADO MIRANDO AL CUERPO Y UN LADO MIRANDO A LA PRENDA, UN PLANO DE SIMETRIA LONGITUDINAL, UN BORDE DEL EXTREMO DELANTERO Y UN BORDE DEL EXTREMO POSTERIOR Y QUE ESTA COMPUESTO POR UNA LAMINA SUPERIOR PERMEABLE AL LIQUIDO, UNA LAMINA POSTERIOR UNIDA A DICHA LAMINA SUPERIOR Y UN NUCLEO ABSORBENTE INTERMEDIO ENTRE DICHAS LAMINAS POSTERIOR Y SUPERIOR. EL NUCLEO ABSORBENTE TIENE UNA SECCION DELANTERA, UNA SECCION CENTRAL Y UNA SECCION POSTERIOR, Y ESTA COMPUESTO POR UN SURCO ORIENTADO LONGITUDINALMENTE EN LAS SECCIONES CENTRAL Y POSTERIOR, QUE TIENE UN PERFIL QUE PERMITE UN MEJOR AJUSTE AL CUERPO. TIENE USO EN LA FABRICACION DE ARTICULOS ABSORBENTES TALES COMO TOALLAS SANITARIAS, TOALLAS HIGIENICAS Y SIMILARES CAPACES DE BRINDAR UN MEJOR AJUSTE AL CUERPO A tridimensional disposable **absorbent** **article** having a body facing surface and a garment facing surface, a longitudinal symmetry plane, a front end edge and a rear end edge, and comprising a liquid pervious topsheet, a backsheet joined to said topsheet and an **absorbent** **core** intermediate the backsheet and the topsheet. The **absorbent** **core** has a front portion, a central portion and a rear portion, and comprises a longitudinally oriented ridge in the central and rear portion having a profile that provides for an increased body fit.

**Classifications:**
**International (IPC 8-9):** A61F13/00 A61F13/15 A61F13/472 A61F13/514 (Advanced/Invention)
**International (IPC 1-7):** A61F13/15
**CPC:** A61F13/47227 A61F13/47263 A61F13/4758 A61F2013/455 A61F2013/4568
**European:** A61F13/472B1 A61F13/472D A61F13/475B K61F13/45C3A K61F13/45C4

**Family:**

| Publication number | Publication date | Application number | Application date |
|---|---|---|---|
| AR016124 AA | 20010620 | AR1998P103200 | 19980701 |
| CO5060493 A1 | 20010730 | CO19980037135 | 19980701 |
| PE102199 A1 | 19991210 | PE19980000585 | 19980701 |
| TR9903321 T2 | 20000921 | TR19990003321T | 19980629 |

**Priority:**
EP19970110735 19970701

**Probable Assignee:** PROCTER AND GAMBLE
**Assignee(s):** (std): PROCTER AND GAMBLE
**Assignee(s):** PROCTER AND GAMBLE CO ; THE PROCTER AND GAMBLE COMPANY
**Inventor(s):** (std): ARESKOUG ALOIS ; LAVASH BRUCE WILLIAM ; WIERLACHER STEFAN ALOIS
**Inventor(s):** ALOIS ARESKOUG ; STEFAN ALOIS WIERLACHER ; BRUCE WILLIAM LAVASH
**Agent(s):** CARLOS REINALDO OLARTE GARCIA

**22) Family number: 28676509** (WO0038604A1) © PatBase

**Title:** AN **ABSORBENT** **ARTICLE** AND PROCESS FOR PRODUCTION THEREFOR

**Abstract:**
A laminate material comprising at least **two** contiguous layers, with at least one layer comprising fibrous material, at least one layer comprising a **superabsorbent** and wherein at least one of the layers interpenetrates the other so that the boundary between the layers is diffuse.

**Classifications:**
**International (IPC 8-9):**
A61F13/15 (Advanced/Invention)
**International (IPC 1-7):** A61F13/15
**CPC:** A61F13/15658 A61F13/534 A61F13/53743 A61F13/539 A61F2013/530481 A61F2013/53782 A61F2013/53966 A61F2013/53975
**European:** A61F13/15M3G A61F13/534 A61F13/537C A61F13/539 K61F13/537E4 K61F13/539E K61F13/539G K61F13/53Q

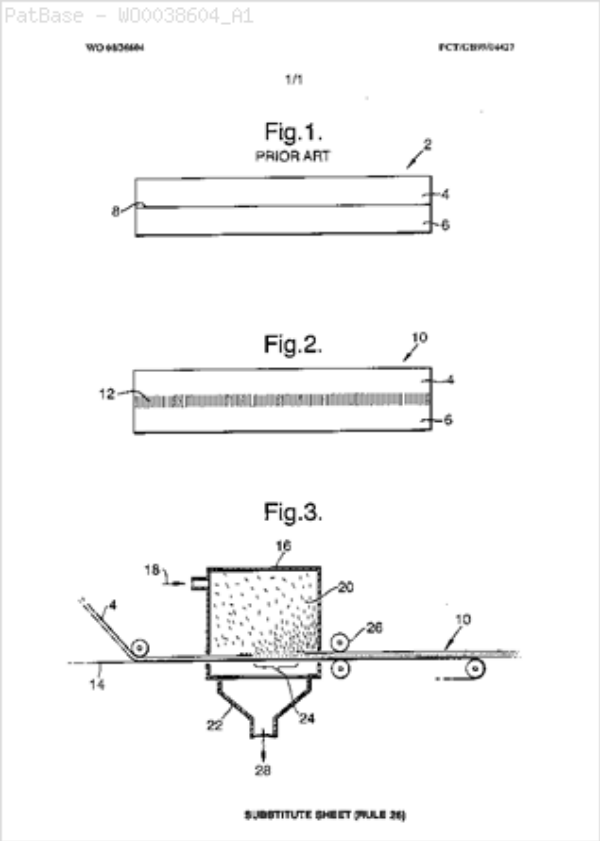


**Family:**

| Publication number | Publication date | Application number | Application date |
|---|---|---|---|
| CA2355746 AA | 20010620 | CA19992355746 | 19991223 |
| EP1139953 A1 | 20011010 | EP19990962460 | 19991223 |
| GB9828587 A0 | 19990217 | GB19980028587 | 19981223 |
| GB9909586 A0 | 19990623 | GB19990009586 | 19990426 |
| WO0038604 A1 | 20000706 | WO1999GB04427 | 19991223 |

**Priority:**
GB19980028587 19981223 GB19990009586 19990426 WO1999GB04427 19991223

**Probable Assignee:** CAMELOT TECHNOLOGIES LTD

**Assignee(s):** (std)**:** CAMELOT TECHNOLOGIES LIMITED ; CAMELOT TECHNOLOGIES LTD ; CHEYNE IAN ; DAN ERVIN ; RITTER STEPHEN DAVID

**Inventor(s):** (std)**:** CHEYNE IAN ; DAN ERVIN

**Agent(s):** OGILVY RENAULT

**Designated states:** AT BE CA CH CY DE DK ES FI FR GB GR IE IT LI LU MC MG NL PT SE US

**23) Family number: 28677029** (US2003208175A) © PatBase

**Title:** ABSORBENT PRODUCTS WITH IMPROVED VERTICAL WICKING AND REWET CAPABILITY

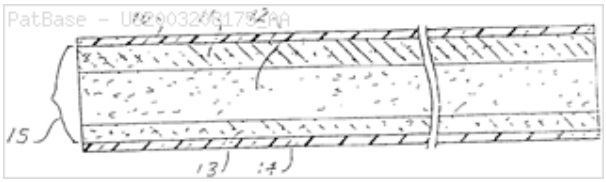


**Abstract:**
Source: US2003208175A The present invention relates to an **absorbent** **core** for use in an **absorbent** **article** and methods to make the **absorbent** **core** and **absorbent** **articles**. The **absorbent** **core** has a discrete wicking layer made with compressible fibers such as eucalyptus or chemically treated fibers. The **absorbent** **core** and articles made with it have improved vertical wicking capacity and superior rewet characteristics.

**Classifications:**
**International (IPC 8-9):** A41B9/12 A61B19/08 A61F13/00 A61F13/15 A61F13/472 A61F13/49 A61F13/51 A61F13/53 A61F13/534 A61F13/536 A61F13/537 A61F5/44 A61L15/16 A61L15/18 A61L15/20 A61L15/60 B32B5/26 B32B5/30 D04H1/42 D04H1/70 D04H13/00 (Advanced/Invention); A61F13/536 A61F5/44 D02G3/00 D04H1/42 (Advanced/Non-invention); A41B9/00 A61B19/00 A61F13/00 A61F13/15 A61F5/44 A61L15/16 D04H13/00 (Core/Invention)
**International (IPC 1-7):** A41B9/12 A61B19/08 A61F13/00 A61F13/15 A61F13/46 A61F13/49 A61F13/51 A61F13/53 A61F13/534 A61F13/536 A61F13/537 A61F5/44 A61L15/16 A61L15/18 A61L15/60 B32B27/02 B32B31/00 B32B5/26 B32B5/30 D02G3/00 D04H1/42 D04H1/70 D04H13/00
**CPC:** A61F13/536 A61F13/53747 A61F13/53756 A61F13/5376 A61F2013/15422 A61F2013/1543 D04H13/003 A61F13/535 Y10T428/24554 Y10T428/24562 Y10T428/2457 Y10T428/24579 Y10T428/2481 A61F13/5323 A61F13/15617 D04H13/002 D04H13/006 D04H13/007 Y10T442/664 Y10T442/671 Y10T442/673 Y10T442/692 Y10T442/697 Y10T442/698 Y10T442/699
**European:** A61F13/15M3 A61F13/532B A61F13/535 A61F13/536 A61F13/537C2 A61F13/537C8 A61F13/537D D04H13/00B2 D04H13/00B3 D04H13/00B4 D04H13/00B5 K61F13/15J8H K61F13/15J8H1
**US:** 128/849 128/849S 428/165 428/166 428/167 428/168 428/196 442/385 442/392 442/393 442/411 442/415 442/416 442/417 602/43 602/43P 604/367 604/375 604/375S 604/378 604/378S 604/38 604/380

**Family:**

| Publication number | Publication date | Application number | Application date |
|---|---|---|---|
| AR026549 AA | 20030219 | AR2000P106124 | 20001121 |
| AR029638 AA | 20030710 | AR2000P102627 | 20000526 |
| AR032143 AA | 20031029 | AR2001P100453 | 20010131 |
| AT282388 E | 20041215 | AT20010903417T | 20010130 |
| AU200052936 A5 | 20001212 | AU20000052936 | 20000525 |
| AU200116192 A5 | 20010530 | AU20010016192 | 20001117 |
| AU2001231233 AA | 20010807 | AU20010231233 | 20010130 |
| AU200131233 A5 | 20010807 | AU20010031233 | 20010130 |
| AU751367 B2 | 20020815 | AU20000052936 | 20000525 |
| BRPI0011589 A | 20020416 | BR2000PI11589 | 20000525 |
| CA2372937 AA | 20011122 | CA20002372937 | 20000525 |
| CA2372937 C | 20060411 | CA20002372937 | 20000525 |
| CA2391528 AA | 20020514 | CA20002391528 | 20001117 |
| CA2397938 AA | 20020719 | CA20012397938 | 20010130 |
| CA2397938 C | 20100817 | CA20012397938 | 20010130 |
| CN1119442 C | 20030827 | CN20008007988 | 20000525 |
| CN1351683 A | 20020529 | CN20008007988 | 20000525 |
| CO5180547 A1 | 20020730 | CO20000043007 | 20000609 |
| CO5200786 A1 | 20020927 | CO20000088046 | 20001120 |
| CO5200787 A1 | 20020927 | CO20010006975 | 20010131 |
| DE60107215 D1 | 20041223 | DE20016007215 | 20010130 |

| | | | |
|---|---|---|---|
| DE60107215 T2 | 20051110 | DE20016007215T | 20010130 |
| EP1214465 A1 | 20020619 | EP20000937813 | 20000525 |
| EP1242017 A1 | 20020925 | EP20000978767 | 20001117 |
| EP1263374 A1 | 20021211 | EP20010903417 | 20010130 |
| EP1263374 B1 | 20041117 | EP20010903417 | 20010130 |
| JP2003505267 T2 | 20030212 | JP20010511307T | 20000525 |
| JP2003521318 T2 | 20030715 | JP20010555621T | 20010130 |
| JP2012040403 A2 | 20120301 | JP20110227733 | 20111017 |
| JP2013046817 A2 | 20130307 | JP20120242612 | 20121102 |
| JP5230048 B2 | 20130710 | JP20010555621T | 20010130 |
| KR20020025873 A | 20020404 | KR20017014939 | 20011122 |
| KR20020080386 A | 20021023 | KR20027009472 | 20020724 |
| MXPA02005020 A1 | 20030523 | MX2002PA05020 | 20001117 |
| PE06552001 A1 | 20010619 | PE20000001240 | 20001120 |
| PE10362001 A1 | 20011012 | PE20010000113 | 20010131 |
| TH45914 A | 20010622 | TH20001001840 | 20000525 |
| TH47002 A | 20010906 | TH20001004468 | 20001120 |
| TW499309 B | 20020821 | TW20000110126 | 20000726 |
| TW567061 B | 20031221 | TW20000124555 | 20010201 |
| TW584554 B | 20040421 | TW20010101799 | 20010307 |
| US2003208175 AA | 20031106 | US20010774248 | 20010130 |
| US2010137773 AA | 20100603 | US20090636423 | 20091211 |
| US6559081 BA | 20030506 | US20000578603 | 20000525 |
| WO0071790 A1 | 20001130 | WO2000US14538 | 20000525 |
| WO0071790 C2 | 20010628 | WO2000US14538 | 20000525 |
| WO0135886 A1 | 20010525 | WO2000US31627 | 20001117 |
| WO0135886 C1 | 20011011 | WO2000US31627 | 20001117 |
| WO0154641 A1 | 20010802 | WO2001US02971 | 20010130 |

**Priority:**

| | | | | | |
|---|---|---|---|---|---|
| US19990135912P | 19990525 | US19990166489 | 19991119 | US19990166489P | 19991119 |
| US20000578603 | 20000525 | US20000495530 | 20000131 | US20000211091P | 20000612 |
| WO2000US14538 | 20000525 | US20000211090P | 20000612 | WO2000US31627 | 20001117 |
| US20010774248 | 20010130 | US20090636423 | 20091211 | WO2001US02971 | 20010130 |
| JP20010555621 | 20010130 | | | | |

**Probable Assignee:** BUCKEYE TECHNOLOGIES INC

**Assignee(s):** (std)**:** BUCKEYE TECHNOLOGIES INC ; CAMPBELL ALAN JEFFREY ; ERSPAMER JOHN ; HURLEY JEFFREY S ; ERSPAMER JOHN P ; WAHAL SANJAY ; HOOD RYAN K ; KALMAN MICHAEL ; DUTKIEWICZ JACEK K ; KALMON MICHAEL ; GROSS JAMES R ; BAKER JOHN PERRY ; BETTS DERRIX ; BKI HOLDING CORP ; BKT HOLDING CORP ; BOEHMER BRIAN E

**Assignee(s):** BKI HOLDING CORP WILMINGTON ; BANK OF AMERICA NA COLLATERAL AGENT AS ; FLEET NATIONAL BANK ; DUTKIEVICZ JACEK K

**Inventor(s):** (std)**:** BRIAN E BOEHMER ; CAMPBELL ALAN JEFFREY ; DERRIX BETIS ; DERRIX BETTS ; DUTKIEVICZ JACEK K ; DUTKIEWICZ JACEK K ; ERSPAMER J ; ERSPAMER JOHN ; ERSPAMER JOHN P ; GROSS JAMES R ; HOOD RYAN K ; HOOD RYAN K AND ; HURLEY J S ; HURLEY JEFFREY S ; HURLEY JEFFREY SCOTT ; BETTS DERRIX ; BOEHMER B E ; BOEHMER BRIAN ; BOEHMER BRIAN E ; JACEK K DUTKIEWICZ ; JEFFREY S HURLEY ; JOHN ERSPAMER ; KALMAN MICHAEL ; KALMON MICHAEL ; PERRY BAKER JOHN ; RYAN K HOOD ; SAJAY WAHAL ; WAHAL SANJAY ; MICHAEL KALMON ; GROSS R ; ERSPAMER P ; BOEHMER E ; BAKER PERRY ; BAKER JOHN PERRY

**Inventor(s):** BE BOEHMER ; BETIS DERRIX ; JOHN P. ERSPAMER ; JAMES R. GROSS ; J S HURLEY ; B E BOEHMER ; SANJAY WAHAL ; JOHN PERRY BAKER ; JACEK K DUTKIEVICZ ; WAHAL SAJAY ; MICHAEL KALMAN ; JS HURLEY ; BRIAN

BOEHMER ; J ERSPAMER

**Agent(s):** DAVIES COLLISON CAVE; ROBIC; GOUDREAU GAGE DUBUC; LUIS FELIPE CASTILLO GIBSONE; GERMAN CASTILLO GRAU; BAKER BOTTS LLP

**Designated states:** AE AG AL AM AT AU AZ BA BB BE BF BG BJ BR BY BZ CA CF CG CH CI CM CN CR CU CY CZ DE DK DM EE ES FI FR GA GB GD GE GH GM GN GR GW HR HU ID IE IL IN IS IT JP KE KG KP KR KZ LC LI LK LR LS LT LU LV MA MC MD MG MK ML MN MR MW MX MZ NE NL NO NZ PL PT RO RU SD SE SG SI SK SL SN SZ TD TG TJ TM TR TT TZ UA UG US UZ VN YU ZA ZW

**24) Family number: 24678458** (WO02094328A3) © PatBase

**Title:** DOUBLE-SIDED COATED FIBROUS WEB **ABSORBENT** **ARTICLE**

**Abstract:**
An **absorbent** **article** comprising at least one double-sided coated fibrous web having a storage layer on one side and an **acquisition** **layer** on the other side and/or a combination of at least **two** adhering double-sided coated webs with the proviso that one web has a storage layer on both sides and the other web has an **acquisition** **layer** on both sides wherein said layers are obtained by (a) forming a blend comprising one or more monomers forming **superabsorbent** polymers, **superabsorbent** polymer particles, water, and one or more initiators, said blend having a viscosity of at least 20 mPas (measured at 20 degrees centrigrade in a Brookfield viscometer, spindle 02, 20 rpm) (b) applying said blend onto a fibrous web and (c) carrying out the polymerization of the monomers forming **superabsorbent** polymers and a disposable hygiene article containing said **absorbent** **article**.

**Classifications:**
**International (IPC 8-9):** A61L15/42 A61L15/60 (Advanced/Invention); A61L15/16 (Core/Invention)
**International (IPC 1-7):** A61F13/15 A61L15/42 A61L15/60
**CPC:** A61L15/42 A61L15/60
**European:** A61L15/42 A61L15/60

**Family:**

| Publication number | Publication date | Application number | Application date |
|---|---|---|---|
| AU2002338987 AA | 20021203 | AU20020338987 | 20020518 |
| WO02094328 A2 | 20021128 | WO2002EP05534 | 20020518 |
| WO02094328 A3 | 20030403 | WO2002EP05534 | 20020518 |
| WO02094328 B1 | 20031218 | WO2002EP05534 | 20020518 |

**Priority:**
US20010292511P 20010523 US20010341286P 20011220 WO2002EP05534 20020518

**Probable Assignee:** BASF AG

**Assignee(s):** (std): BASF AG ; ENGELHARDT FRIEDRICH ; WHITMORE DARRYL L

**Assignee(s):** BASF AKTIENGESELLSCHAFT

**Inventor(s):** (std): ENGELHARDT FRIEDRICH ; WHITMORE DARRYL L

**Inventor(s):** DARRYL L WHITMORE ; FRIEDRICH ENGELHARDT

**Designated states:** AE AG AL AM AT AU AZ BA BB BE BF BG BJ BR BY BZ CA CF CG CH CI CM CN CO CR CU CY CZ DE DK DM DZ EC EE ES FI FR GA GB GD GE GH GM GN GQ GR GW HR HU ID IE IL IN IS IT JP KE KG KP KR KZ LC LK LR LS LT LU LV MA MC MD MG MK ML MN MR MW MX MZ NE NL NO NZ OM PH PL PT RO RU SD SE SG SI SK SL SN SZ TD TG TJ TM TN TR TT TZ UA UG US UZ VN YU ZA ZM ZW

**25) Family number: 28611226** (US2003088229A) © PatBase

**Title:** **Absorbent** **article** with bimodal **acquisition** **layer**

**Abstract:**
Source: US2003088229A A disposable absorbent garment including a topsheet, a backsheet, a storage layer, and an **acquisition** **layer** is disclosed. The **acquisition** **layer** lies between the topsheet and the storage layer, and includes at least **two** yarns oriented generally parallel with the longitudinal axis of the article, with an acquisition channel between each adjacent pair of yarns. The acquisition channels provide free volume for temporary fluid storage until the fluids can be absorbed by the storage layer and allow fluids to move to the longitudinal ends of the article. The yarns store fluids until they are absorbed, and wick fluids away from the topsheet to keep the user dry. Each yam may have properties specifically tailored to provide particular benefits depending on each yarn's location in the garment. The absorbent garment using such an **acquisition** **layer** is comfortable, highly absorbent, and economical to produce.

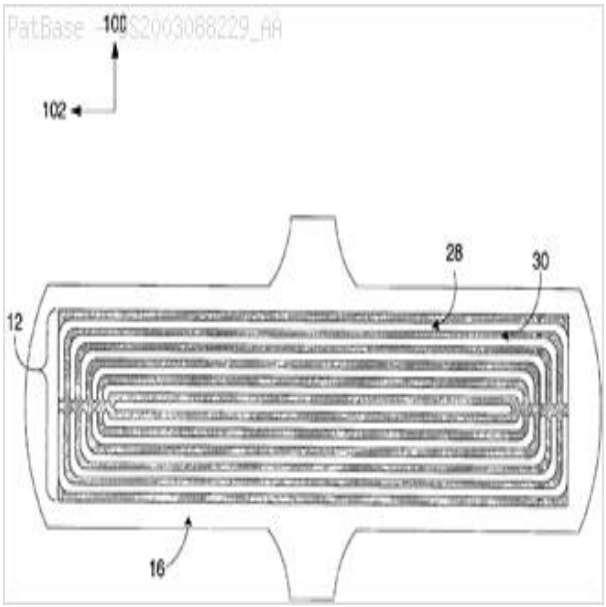


**Classifications:**
**International (IPC 8-9):**
A61F13/15 (Advanced/Invention);
A61F13/15 (Core/Invention)
**International (IPC 1-7):** A61F13/15 A61F13/20
**CPC:** A61F13/53717 A61F13/53747 A61F13/5376 A61F13/538 A61F2013/15447 A61F2013/53778
**European:** A61F13/537B4 A61F13/537C2 A61F13/537D A61F13/538 K61F13/15J8L K61F13/537E3
**US:** 604/378 604/378S 604/384 604/384S 604/385.101 604/385.101P

**Family:**

| Publication number | Publication date | Application number | Application date |
|---|---|---|---|
| AU2002353962 AA | 20030519 | AU20020353962 | 20021101 |
| US2003088229 AA | 20030508 | US20010985453 | 20011102 |
| WO03039402 A2 | 20030515 | WO2002US35078 | 20021101 |
| WO03039402 A3 | 20040226 | WO2002US35078 | 20021101 |

**Priority:**
US20010985453 20011102 WO2002US35078 20021101

**Probable Assignee:** PARAGON TRADE BRANDS INC

**Assignee(s):** (std)**:** BAKER ANDREW ; NAUGHTON SAUNDRA ; PARAGON TRADE BRANDS INC

**Inventor(s):** (std)**:** BAKER ANDREW ; NAUGHTON SAUNDRA

**Inventor(s):** SAUNDRA NAUGHTON ; ANDREW BAKER

**Designated states:** AE AG AL AM AT AU AZ BA BB BE BF BG BJ BR BY BZ CA CF CG CH CI CM CN CO CR CU CY CZ DE DK DM DZ EC EE ES FI FR GA GB GD GE GH GM GN GQ GR GW HR HU ID IE IL IN IS IT JP KE KG KP KR KZ LC LK LR LS LT LU LV MA MC MD MG MK ML MN MR MW MX MZ NE NL NO NZ OM PH PL PT RO RU SD SE SG SI SK SL SN SZ TD TG TJ TM TN TR TT TZ UA UG UZ VC VN YU ZA ZM ZW

**26) Family number: 31060907** (US2003134559A) © PatBase

**Title:** SYSTEM AND METHOD FOR DRY FORMING **ABSORBENT** **CORES**

**Abstract:**
Source: US2003134559A An apparatus and method for dry forming **absorbent** **cores** are disclosed. The apparatus has a rotatable drum having a substantially cylindrical surface. A vacuum surface having one or more holes is located substantially circumferentially around at least a portion of the substantially cylindrical surface. A vacuum chamber is located within the rotatable drum. The vacuum chamber has one or more vacuum passages forming a vacuum zone subadjacent at least a portion of the vacuum surface. A first casing sheet is supplied to overlie the vacuum surface at a first location, and a fibrous material is supplied to overlie the first casing sheet at a second location. A supply of particulate matter is deposited onto the fibrous material at a third location, and a second casing sheet is supplied to overlie the first casing sheet, fibrous material and particulate matter at a fourth location, thereby forming an **absorbent** **core** composite.

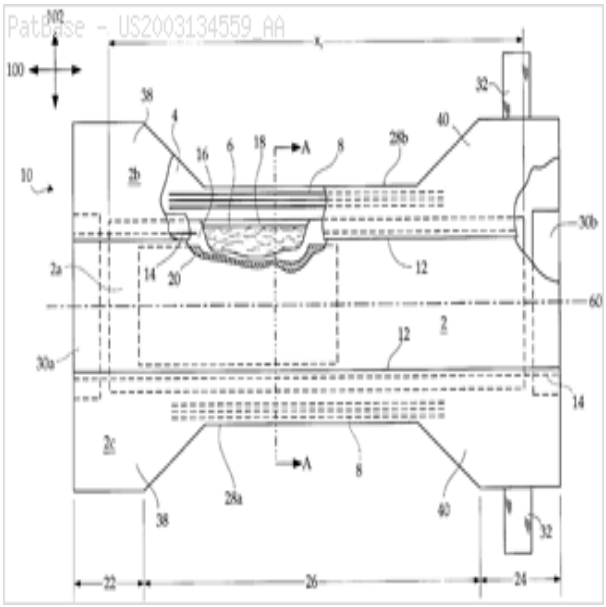


**Classifications:**
**International (IPC 8-9):** A01J21/00 A01J25/12 A21C11/00 A21C3/00 A61F13/00 A61F13/15 A61F13/20 A61F13/49 A61F13/53 A61F13/534 A61F13/539 A61F13/56 A61F13/58 A61F15/00 A61F5/44 A61L15/28 A61L15/60 B27N1/00 B27N3/00 B28B5/00 B29C43/22 B29C44/20 B32B5/30 D04H1/20 (Advanced/Invention);
A61F13/494 (Advanced/Non-invention);
A61F13/00 A61F13/15 A61F13/56 A61F5/44 (Core/Invention);
A61F (Subclass/Invention)
**International (IPC 1-7):** A01J21/00 A01J25/12 A21C11/00 A21C3/00 A61F0/00 A61F13/00 A61F13/15 A61F13/20 A61F13/49 A61F13/53 A61F13/534 A61F13/539 A61F13/56 A61F13/58 A61F15/00 A61F5/44 B27N1/00 B27N3/00 B28B5/00 B29C43/22 B29C44/20 B32B27/12 B32B31/00 B32B5/16 B32B5/26 C09J1/00 D04H1/00 D04H1/20 D04H13/00 D04H3/00 D04H5/00 D29D7/00
**CPC:** A61F13/5323 A61F13/534 A61F13/539 A61F13/49017 A61F13/53418 A61F13/53427 A61F13/53436 A61F13/535 A61F13/537 A61F13/8405 A61F2013/49038 A61F2013/5315 Y10T156/1008 Y10T156/1015 Y10T156/1051 Y10T156/1798 Y10T156/1098 A61F13/15658 B32B5/30 A61F13/1565 Y10T442/659 Y10T442/674 Y10T442/699 Y10T442/60 A61F2013/530532 A61F2013/530554
**European:** A61F13/15M3F A61F13/15M3G A61F13/532B A61F13/534 A61F13/535 A61F13/539 B32B5/30 K61F13/49D2E K61F13/49D2J K61F13/531B K61F13/534B2 K61F13/534B4 K61F13/534B6 K61F13/537 K61F13/53Q2C K61F13/53Q2E1 K61F13/84B
**US:** 156/200 156/204 156/227 156/276 156/276S 156/285 156/285S 156/303 156/442.1 156/442.2 156/443 156/578 264/119 264/119S 264/517 264/518 425/363 425/363S 425/388 425/388S 425/403 425/403.1 425/405.1 425/470 425/504 425/504S 425/505 425/505P 425/80.1 425/801 425/82.1 425/83.1 442/327 442/327S 442/381 442/381S 442/394 442/394P 442/394S 442/417 442/417P 604/358 604/358P 604/367 604/367P 604/368 604/368P 604/378 604/378P 604/378S 604/385.28 604/385.280S 604/386 604/386S 604/387 604/387S

**Family:**

| Publication number | Publication date | Application number | Application date |
|---|---|---|---|
| AT373456 E | 20071015 | AT20030701283T | 20030110 |
| AU2003202268 AA | 20030902 | AU20030202268 | 20030110 |
| CA2473543 AA | 20040715 | CA20032473543 | 20030110 |
| CA2519671 AA | 20050920 | CA20042519671 | 20040324 |
| CA2521691 AA | 20051006 | CA20042521691 | 20040405 |
| CA2579696 AA | 20070307 | CA20052579696 | 20050926 |

| | | | |
|---|---|---|---|
| CA2580602 AA | 20070314 | CA20052580602 | 20050112 |
| DE60316409 D1 | 20071031 | DE20036016409 | 20030110 |
| EP1474070 A2 | 20041110 | EP20030701283 | 20030110 |
| EP1474070 A4 | 20050323 | EP20030701283 | 20030110 |
| EP1474070 B1 | 20070919 | EP20030701283 | 20030110 |
| EP1610934 A2 | 20060104 | EP20040758043 | 20040324 |
| EP1610934 A4 | 20110907 | EP20040758043 | 20040324 |
| EP1613257 A2 | 20060111 | EP20040759120 | 20040405 |
| EP1811937 A1 | 20070801 | EP20050705564 | 20050112 |
| JP2005515020 T2 | 20050526 | JP20030561470T | 20030110 |
| MX2007003549 A1 | 20070523 | MX20070003549 | 20050926 |
| MX2007003734 A1 | 20070423 | MX20070003734 | 20050112 |
| MXPA04006960 A1 | 20041126 | MX2004PA06960 | 20030110 |
| MXPA05010253 A1 | 20051214 | MX2005PA10253 | 20040324 |
| MXPA05010917 A1 | 20060531 | MX2005PA10917 | 20040405 |
| US2003134559 AA | 20030717 | US20020046279 | 20020116 |
| US2003135178 AA | 20030717 | US20020050045 | 20020117 |
| US2003212376 AA | 20031113 | US20030394588 | 20030324 |
| US2004204697 AA | 20041014 | US20030411376 | 20030411 |
| US2005101217 AA | 20050512 | US20040984867 | 20041110 |
| US2005101929 AA | 20050512 | US20040951791 | 20040929 |
| US2005107759 AA | 20050519 | US20040951792 | 20040929 |
| US2005147711 AA | 20050707 | US20050072957 | 20050307 |
| US2005215962 AA | 20050929 | US20050032802 | 20050111 |
| US6832905 BB | 20041221 | US20020046279 | 20020116 |
| US6923926 BB | 20050802 | US20030394588 | 20030324 |
| US7232300 BB | 20070619 | US20050072957 | 20050307 |
| WO03061524 A2 | 20030731 | WO2003US00612 | 20030110 |
| WO03061524 A3 | 20040715 | WO2003US00612 | 20030110 |
| WO04084766 A2 | 20041007 | WO2004US08794 | 20040324 |
| WO04084766 A3 | 20041229 | WO2004US08794 | 20040324 |
| WO04091427 A2 | 20041028 | WO2004US10404 | 20040405 |
| WO04091427 A3 | 20050915 | WO2004US10404 | 20040405 |
| WO06039188 A2 | 20060413 | WO2005US34041 | 20050926 |
| WO06039188 A3 | 20070614 | WO2005US34041 | 20050926 |
| WO06039191 A2 | 20060413 | WO2005US34065 | 20050926 |
| WO06039191 A3 | 20061221 | WO2005US34065 | 20050926 |
| WO06041507 A1 | 20060420 | WO2005US00964 | 20050112 |

**Priority:**

| | | | | | |
|---|---|---|---|---|---|
| US20020046279 | 20020116 | US20020050045 | 20020117 | WO2004US08794 | 20040324 |
| US20030394588 | 20030324 | US20030411376 | 20030411 | WO2003US00612 | 20030110 |
| US20040984867 | 20041110 | US20050072957 | 20050307 | US20040951792 | 20040929 |
| US20040951791 | 20040929 | WO2005US34041 | 20050926 | US20050032802 | 20050111 |
| WO2005US00964 | 20050112 | WO2004US10404 | 20040405 | | |

**Probable Assignee:** PARAGON TRADE BRANDS

**Assignee(s):** (std)**:** FIRST QUALITY RETAIL SERVICES LLC ; GLAUG FRANK ; LITVAY JOHN ; LITVAY JOHN D ; TYCO HEALTHCARE RETAIL SERVICE ; PARAGON TRADE BRANDS INC ; WAKSMUNDZKI ANDREW ; EGTED WALTER ; TYCO HELTHCARE RETAIL SERVICES ; TYCO HEALTHCARE RETAIL SERV AG ; TYCON HEALTHCARE RETAIL SERVIC ; TYCO HEALTHCARE RETAIL SERVICES AG ; PARAGON TRADE BRANDS ; WALTER JOHN

**Assignee(s):** DELZER TROY ; PARAGON TRADE BRANDS LLC ; TYCO HEALTHCARE RETAIL GROUP INC ; TYCO HOALTHCARE RETAIL SERVICES AG ; JPMORGAN CHASE NA

; TYCON HEALTHCARE RETAIL SERVICES AG ; EGYED WALTER ; TYCO HELTHCARE RETAIL SERVICES AG ; HANSEN EBBA A ; JP MORGAN CHASE BANK NA

**Inventor(s):** (std)**:** EGYED WALTER ; HANSEN EBBA A ; JOHN D LITVAY ; WALTER JOHN ; EBBA A HANSEN ; DELZER TROY ; WAKSMUNDZKI ANDREW ; HANSEN EBBA ; EGTED WALTER ; GLAUG FRANK ; LITVAY JOHN ; LITVAY JOHN D

**Inventor(s):** WALTER EGTED ; ANDREW WAKSMUNDZKI ; JOHN LITVAY ; FRANK GLAUG

**Agent(s):** PIASETZKI AND NENNIGER LLP; BERESKIN AND PARR LLP SENCRL SRL; BLAKE CASSELS AND GRAYDON LLP; CHRISTOPHER C CAMPBELL ESQUIRE HUNTON AND WILLIAMS; CHRISTOPHER C CAMPBELL ESQ HUNTON AND WILLIAMS; HUNTON AND WILLIAMS LLP, INTELLECTUAL PROPERTY DEPARTMENT; HUNTON AND WILLIAMS LLP INTELLECTUAL PROPERTY DEPARTMENT; MARK S LEONARDO ESQ BROWN RUDNICK BERLACK ISRAELS LLP; HUNTON AND WILLIAMS; SPILMAN THOMAS AND BATTLE PLLC

**Designated states:** AE AG AL AM AT AU AZ BA BB BE BF BG BJ BR BW BY BZ CA CF CG CH CI CM CN CO CR CU CY CZ DE DK DM DZ EC EE EG ES FI FR GA GB GD GE GH GM GN GQ GR GW HR HU ID IE IL IN IS IT JP KE KG KM KP KR KZ LC LI LK LR LS LT LU LV LY MA MC MD MG MK ML MN MR MW MX MZ NA NE NG NI NL NO NZ OM PG PH PL PT RO RU SC SD SE SG SI SK SL SM SN SY SZ TD TG TJ TM TN TR TT TZ UA UG US UZ VC VN YU ZA ZM ZW

**27) Family number: 28829923** (US2003135177A) © PatBase

**Title:** **ABSORBENT** **ARTICLES** CONTAINING MULTI-COMPONENT CORE COMPOSITE AND METHODS OF MAKING SAME

**Abstract:**
Source: US2003135177A The present invention relates generally to a multi-component **absorbent** **core** composite for an **absorbent** **article**, and more particularly to a multi-component **absorbent** **core** composite comprising at least **two** **absorbent** **core** units having different properties, whereby at least one of the **absorbent** **core** units includes a mixture of tow fibers and **superabsorbent** polymer (SAP) particles. The at least **two** **absorbent** **core** units are associated and arranged with one another to form the multi-component **absorbent** **core** composite. Such core composites provide the flexibility of creating precise zoning of particular properties throughout the core, provide improved comfort and fit, and provide less costly means of using expensive core ingredients

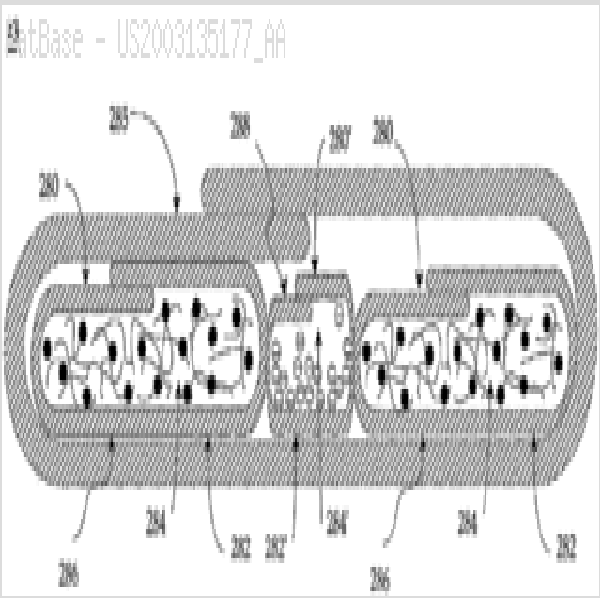


**Classifications:**
**International (IPC 8-9):**
A61F13/15 (Advanced/Invention);
A61F13/15 (Core/Invention)
**International (IPC 1-7):** A61F13/15
**CPC:** A61F13/15634 A61F13/5323 A61F13/535 A61F2013/53051
**European:** A61F13/15M3C A61F13/532B A61F13/535 K61F13/53Q2
**US:** 604/368 604/368P 604/378 604/378S 604/385.28 604/385.280S 604/386 604/386S

**Family:**

| Publication number | Publication date | Application number | Application date |
|---|---|---|---|
| US2003135177 AA | 20030717 | US20020046554 | 20020116 |

**Priority:**
US20020046554 20020116

**Probable Assignee:** PARAGON TRADE BRANDS INC
**Assignee(s):** BAKER ANDREW ; PARAGON TRADE BRANDS INC
**Inventor(s):** (std)**:** BAKER ANDREW

**28) Family number: 28926546** (US2003150551A) © PatBase

**Title:** DRY FORMED COMPOSITE WITH CUT AND PLACE LAYERS

**Abstract:**
Source: US2003150551A The present invention generally relates to a method and apparatus for forming an absorbent garment and an absorbent composite core. The absorbent composite core preferably is comprised of at least four layers, whereby **two** of the layers are outer layers, (an upper layer and a lower layer), one of the inner layers is a central fibrous layer containing a mixture of tow fibers and SAP, and the other inner layer is at least one layer selected from an **acquisition layer**, a distribution layer, an additional fibrous layer optionally containing SAP, a wicking layer, a storage layer, a dryness layer, a softness layer, or combinations and fragments thereof.

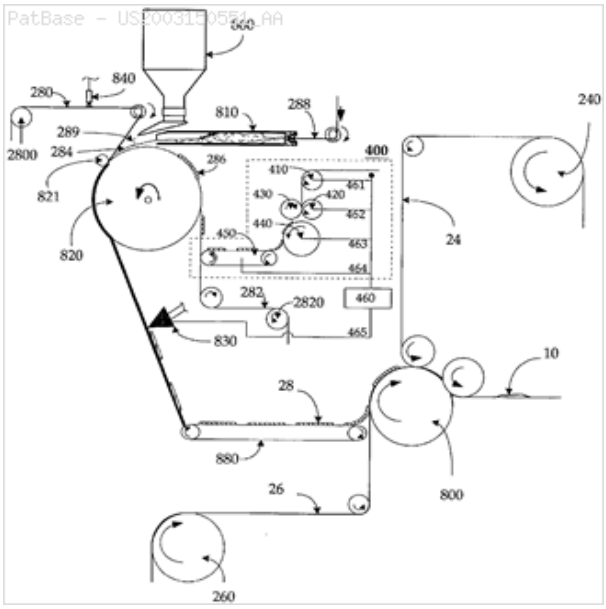


**Classifications:**
**International (IPC 8-9):** A61F13/15 B32B33/00 B32B37/14 B32B38/00 (Advanced/Invention); A61F13/15 (Core/Invention)
**International (IPC 1-7):** A61F13/15 B32B31/00 B32B31/08 B32B31/18
**CPC:** Y10T156/1077 Y10T156/1084 Y10T156/12 Y10T156/133 Y10T156/1339 Y10T156/1734 A61F13/535 A61F13/15626 A61F13/15723 A61F13/537
**European:** A61F13/15M3B A61F13/15M6B A61F13/535 A61F13/537
**US:** 156/265 156/269 156/510 156/519 156/519S 156/521 156/552 264/112 264/122

**Family:**

| Publication number | Publication date | Application number | Application date |
|---|---|---|---|
| AU2003210931 AA | 20030904 | AU20030210931 | 20030210 |
| CA2476272 AA | 20040816 | CA20032476272 | 20030210 |
| CA2476272 C | 20110315 | CA20032476272 | 20030210 |
| MXPA04007868 A1 | 20041126 | MX2004PA07868 | 20030210 |
| US2003150551 AA | 20030814 | US20020074215 | 20020214 |
| US6641695 BB | 20031104 | US20020074215 | 20020214 |
| WO03068122 A1 | 20030821 | WO2003US03838 | 20030210 |

**Priority:**
US20020074215 20020214 WO2003US03838 20030210

**Probable Assignee:** PARAGON TRADE BRANDS INC

**Assignee(s):** (std)**:** PARAGON TRADE BRANDS INC

**Assignee(s):** PARAGON TRADE BRANDS LLC ; BAKER ANDREW ; JP MORGAN CHASE BANK NA ; JPMORGAN CHASE NA

**Inventor(s):** (std)**:** ANDREW BAKER ; BAKER ANDREW

**Agent(s):** PIASETZKI AND NENNIGER LLP; PIASETZKI NENNIGER KVAS LLP

**Designated states:** AE AG AL AM AT AU AZ BA BB BE BF BG BJ BR BY BZ CA CF CG CH CI CM CN CO CR CU CY CZ DE DK DM DZ EC EE ES FI FR GA GB GD GE GH GM GN GQ GR GW HR HU ID IE IL IN IS IT JP KE KG KP KR KZ LC LK LR LS LT LU LV MA MC MD MG MK ML MN MR MW MX MZ NE NL NO NZ OM PH PL PT RO RU SC SD SE SG SI SK SL SN SZ TD TG TJ TM TN TR TT TZ UA UG UZ VC VN YU ZA ZM ZW

**29) Family number: 28995717** (US2003158532A) © PatBase

**Title:** DISPOSABLE **ABSORBENT** **ARTICLE** DESIGNED TO FACILITATE AN EASY INTUITIVE CHANGE

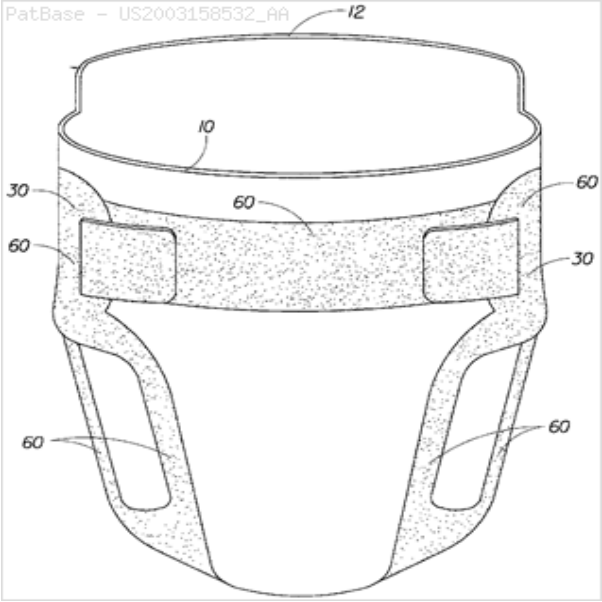


**Abstract:**
Source: US2003158532A A disposable **absorbent** **article** to be worn about the lower torso of a wearer that facilitates an easy, intuitive change is provided. The disposable **absorbent** **article** includes at least one serviceable indicium that facilitates an easy, intuitive change by aligning the article relative to an anatomical feature of the wearer or relative to a component of the article thereby enhancing the fit and corresponding performance of the article.

**Classifications:**
**International (IPC 8-9):** A61F13/15 A61F13/42 A61F13/49 A61F13/493 A61F13/495 A61F13/496 A61F13/511 A61F13/513 A61F13/56 A61F13/62 A61F13/84 A61F5/44 G06Q30/00 G06Q30/02 G06Q30/06 G06Q40/00 G06Q40/02 (Advanced/Invention); A61F13/15 A61F13/49 A61F13/514 A61F13/56 A61F13/62 A61F13/84 (Advanced/Non-invention); A61F13/15 (Core/Invention); A61F13/56 (Core/Non-invention)
**International (IPC 1-7):** A61F13/15 A61F13/20 A61F13/42 A61F13/49 A61F13/56 A61F13/84 A61F5/44 A6AF13/15
**CPC:** A61F13/5638 A61F13/49007 A61F13/84 A61F13/51394 A61F13/51496 A61F2013/51377 A61F13/495 A61F13/5622 A61F2013/8497 G06Q30/02 G06Q30/06 G06Q40/02 A61F13/5633
**European:** A61F13/495 A61F13/496 A61F13/49D2B A61F13/49D2D A61F13/49D2E A61F13/56C A61F13/84 G06Q30/02 G06Q30/06 G06Q40/00 G06Q40/02 G06Q40/06 K61F13/495 K61F13/84G
**US:** 604/358 604/358P 604/361 604/385.01 604/385.010P 604/385.16 604/385.160P 604/385.24 604/385.25 604/385.28 604/385.3 604/385.300S 604/386 604/386S 604/389 604/390 604/391 604/391P 604/394 604/396

**Family:**

| Publication number | Publication date | Application number | Application date |
|---|---|---|---|
| AR038530 AA | 20050119 | AR2003P100546 | 20030220 |
| AR086039 AB | 20131113 | AR2012P101408 | 20120424 |
| AT472310 E | 20100715 | AT20030713523T | 20030215 |
| AU2003217570 AA | 20030909 | AU20030217570 | 20030215 |
| AU2003217570 BB | 20060427 | AU20030217570 | 20030215 |
| AU2003217570 BI | 20060907 | AU20030217570 | 20030215 |
| BR122012023223 B1 | 20151103 | BR20121223223 | 20030215 |
| BRPI0307832 A | 20041207 | BR2003PI07832 | 20030215 |
| CA2476265 AA | 20040809 | CA20032476265 | 20030215 |
| CA2476265 C | 20090721 | CA20032476265 | 20030215 |
| CA2592837 AA | 20030828 | CA20032592837 | 20030215 |
| CA2592837 C | 20091124 | CA20032592837 | 20030215 |
| CA2592910 AA | 20030828 | CA20032592910 | 20030215 |
| CA2592910 C | 20100914 | CA20032592910 | 20030215 |
| CA2593002 AA | 20030828 | CA20032593002 | 20030215 |
| CA2593002 C | 20100817 | CA20032593002 | 20030215 |
| CA2593575 AA | 20030828 | CA20032593575 | 20030215 |
| CA2593744 AA | 20030828 | CA20032593744 | 20030215 |
| CA2593744 C | 20120515 | CA20032593744 | 20030215 |

| | | | |
|---|---|---|---|
| CA2594830 AA | 20030828 | CA20032594830 | 20030215 |
| CA2594830 C | 20100914 | CA20032594830 | 20030215 |
| CA2706657 AA | 20030828 | CA20032706657 | 20030215 |
| CA2706657 C | 20120925 | CA20032706657 | 20030215 |
| CA2708430 AA | 20030828 | CA20032708430 | 20030215 |
| CA2708430 C | 20120911 | CA20032708430 | 20030215 |
| CA2766323 AA | 20030828 | CA20032766323 | 20030215 |
| CA2766323 C | 20130730 | CA20032766323 | 20030215 |
| CL2009001835 A1 | 20100212 | CL20090001835 | 20090909 |
| CL2009001836 A1 | 20100212 | CL20090001836 | 20090909 |
| CN1625380 A | 20050608 | CN20038002910 | 20030215 |
| CN1625380 B | 20100526 | CN20038002910 | 20030215 |
| DE20321822 U1 | 20101014 | DE20032021822U | 20030215 |
| DE60333165 D1 | 20100812 | DE20036033165 | 20030215 |
| EP1476111 A2 | 20041117 | EP20030713523 | 20030215 |
| EP1476111 B1 | 20100630 | EP20030713523 | 20030215 |
| EP1854441 A2 | 20071114 | EP20060125384 | 20030215 |
| EP1854441 A3 | 20130612 | EP20060125384 | 20030215 |
| EP2165687 A2 | 20100324 | EP20090177879 | 20030215 |
| EP2165687 A3 | 20101208 | EP20090177879 | 20030215 |
| EP2241297 A1 | 20101020 | EP20100165229 | 20030215 |
| EP2241297 B1 | 20160330 | EP20100165229 | 20030215 |
| EP2248495 A1 | 20101110 | EP20100165230 | 20030215 |
| EP2248495 B1 | 20121017 | EP20100165230 | 20030215 |
| ES2347545 T3 | 20101102 | ES20030713523T | 20030215 |
| ES2397785 T3 | 20130311 | ES20100165230T | 20030215 |
| ES2397785 T8 | 20130402 | ES20100165230T | 20030215 |
| HK1078760 A3 | 20060324 | HK20050110676 | 20051124 |
| IN02036DN2004 A | 20070831 | IN2004DN02036 | 20040714 |
| IN218336 B | 20080530 | IN2004DN02036 | 20040714 |
| JP2005517494 T2 | 20050616 | JP20030569097T | 20030215 |
| JP2009034524 A2 | 20090219 | JP20080238315 | 20080917 |
| JP4223405 B2 | 20090212 | JP20030569097T | 20030215 |
| KR20040085204 A | 20041007 | KR20047012907 | 20030215 |
| KR20060103550 A | 20061002 | KR20067018297 | 20060907 |
| KR20070004146 A | 20070105 | KR20067026258 | 20061213 |
| KR20070004147 A | 20070105 | KR20067026259 | 20061213 |
| MXPA04008029 A1 | 20050516 | MX2004PA08029 | 20030215 |
| SG185135 A1 | 20121129 | SG20080096687 | 20030215 |
| TH59626 A | 20031124 | TH20031000511 | 20030218 |
| US2003158532 AA | 20030821 | US20020079184 | 20020220 |
| US2005096618 AA | 20050505 | US20040008731 | 20041209 |
| US2007032773 AA | 20070208 | US20060545188 | 20061010 |
| US2007066949 AA | 20070322 | US20060545187 | 20061010 |
| US2007239122 AA | 20071011 | US20070796506 | 20070427 |
| US2010268184 AA | 20101021 | US20100824425 | 20100628 |
| US2011040276 AA | 20110217 | US20100913101 | 20101027 |
| US2013304015 AA | 20131114 | US20130942975 | 20130716 |
| US2014200542 AA | 20140717 | US20140210496 | 20140314 |
| US2015080836 AA | 20150319 | US20140552875 | 20141125 |
| US7632257 BB | 20091215 | US20070796506 | 20070427 |
| US7833212 BB | 20101116 | US20040008731 | 20041209 |
| US7863497 BB | 20110104 | US20060545187 | 20061010 |

| | | | |
|---|---|---|---|
| US8475427 BB | 20130702 | US20100913101 | 20101027 |
| US8492608 BB | 20130723 | US20100824425 | 20100628 |
| US8716548 BB | 20140506 | US20060545188 | 20061010 |
| US9259367 BB | 20160216 | US20130942975 | 20130716 |
| WO03070136 A2 | 20030828 | WO2003US04888 | 20030215 |
| WO03070136 A3 | 20040408 | WO2003US04888 | 20030215 |
| ZA200405377 A | 20050617 | ZA20040005377 | 20040706 |

**Priority:**

| | | | | | |
|---|---|---|---|---|---|
| US20020079184 | 20020220 | CA20032476265 | 20030215 | CA20032593002 | 20030215 |
| CA20032594830 | 20030215 | EP20060125384 | 20030215 | JP20030569097 | 20030215 |
| EP20030713523 | 20030215 | WO2003US04888 | 20030215 | CA20032708430 | 20030215 |
| US20060545187 | 20061010 | US20070796506 | 20070427 | US20060545188 | 20061010 |
| US20040008731 | 20041209 | CA20032706657 | 20030215 | CA20032593744 | 20030215 |
| CA20032766323 | 20030215 | CA20032592910 | 20030215 | CA20032592837 | 20030215 |
| CA20032593575 | 20030215 | JP20030569097T | 20030215 | BR2003PI07832 | 20030215 |
| US20100824425 | 20100628 | US20100913101 | 20101027 | CA20122708430 | 20120214 |
| US20130942975 | 20130716 | US20140210496 | 20140314 | US20140552875 | 20141125 |

**Probable Assignee:** PROCTER AND GAMBLE

**Assignee(s):** (std)**:** GLACKIN GEORGE B ; HOSMER CHRISTOPHER J ; KLINE MARK J ; GLACKIN GEORGE B III ; JEWELL KENNETH E ; JEWELL KENNETH EDWIN ; GLACKIN III GEORGE B ; MAGEE LUKE R ; KORN NAOMI S ; WILSON JAMES D ; SCHMIDT MATTIAS ; THURNAY EVA SUSANNE DOMINIQUE ; MUELLER JOERGE ; SULLIVAN ANN M ; ROE DONALD C ; PROCTER AND GAMBLE ; BATES MARK C ; COSTELLO JOHN C ; PROCTER AND GAMBLE CO ; THURNAY EVA S D ; MUELLER JOERG ; FLENDER GREGG A

**Assignee(s):** FLENDER GREGG ALLEN ; KLINE MARK JAMES ; SULLIVAN ANN MARIE ; ROE DONALD CARROLL ; MAGEE LUKE ROBINSON ; WILSON JAMES DOUGLAS ; KORN NAOMI SHOSHANA ; PROCTOR AND GAMBLE CO ; COSTELLO JOHN CARL ; BATES MARK CHRISTOPHER ; THE PROCTER AND GAMBLE COMPANY ; HOSMER CHRISTOPHER JOHN ; GLAKIN GEORGE BARTOL III ; GLACKIN III GEORGE BARTOL ; GLAKIN III GEORGE BARTOL

**Inventor(s):** (std)**:** ANN MARIE SULLIVAN ; BARTOL GLACKIN III GEORGE ; BATES MARK ; BATES MARK C ; BATES MARK CHRISTOPHER ; CHRISTOPHER JOHN HOSMER ; COSTELLO JOHN ; COSTELLO JOHN C ; COSTELLO JOHN CARL ; DOMINIQUE THURNAY EVA S ; DOMINIQUE THURNAY EVA SUSANNE ; DONALD C ROE ; DONALD CARROLL ROE ; FLENDER GREGG ; FLENDER GREGG A ; FLENDER GREGG ALLAN ; FLENDER GREGG ALLEN ; GLACKIN III ; GLACKIN III GEORG ; GLACKIN III GEORGE ; GLACKIN III GEORGE B ; GLACKIN III GEORGE BARTOL ; GLAKIN GEORGE BARTOL III ; GLAKIN III GEORGE BARTOL ; GREGG ALLEN FLENDER ; GLACKIN GEORGE B ; GLACKIN GEORGE B III ; GLACKIN GEORGE BARTEL N ; GLACKIN GEORGE BARTOL III ; HOSMER CHRISTOPHER ; HOSMER CHRISTOPHER J ; HOSMER CHRISTOPHER JOHN ; III GEORGE BARTOL GLACKIN ; JAMES DOUGLAS WILSON ; JEWELL KENNETH E ; JEWELL KENNETH EDWIN ; JOERG MUELLER ; JOERGE MUELLER ; JOHN CARL COSTELLO ; KLINE JAMES MARK ; KLINE MARK ; KLINE MARK J ; KLINE MARK JAMES ; MAGEE LUKE ; MAGEE LUKE R ; MAGEE LUKE ROBINSON ; MARK CHRISTOPHER BATES ; MARK JAMES KLINE ; MATTIAS SCHMIDT ; KORN GOLD NAOMI SHOSHANA ; KORN NAOMI ; KORN NAOMI S ; KORN NAOMI SHOSHANA ; LUKE ROBINSON MAGEE ; MUELLER JOERG ; MUELLER JOERGE ; NAOMI SHOSHANA KORN ; ROE DONALD ; ROE DONALD C ; ROE DONALD CARROL ; ROE DONALD CARROLL ; EVA SUSANNE DOMINIQUE THURNAY ; SCHMIDT MATTIAS ; SULLIVAN ANN ; SULLIVAN ANN M ; SULLIVAN ANN MARIE ; THURNAY EVA ; THURNAY EVA S D ; THURNAY EVA SUSANNE ; THURNAY EVA SUSANNE DOMINIQUE ; WILSON JAMES ; WILSON JAMES ANTHONY ; WILSON JAMES D ; WILSON JAMES DOUGLAS ; THURNAYE EVA SUSANNE DOMINIQUE

**Inventor(s):** WILSON ; THURNAY EVA SUSANNE DOMINQUE ; THURNAY EVA SD ; THURNAY ; SULLIVAN ; FLENDER ; SCHMIDT ; ROE ; MAGEE ; MUELLER ; KORN ; KLINE ; JEWELL KENNETH ; GLACKIN GEORGE BIII ; HOSMER ; GEORGE BARTOL

GLACKIN III ; GLACKIN ; GLACKIN GEORGE ; DOUGLAS WILSON JAMES ; DOMINIQUE THURNAY EVA ; COSTELLO ; BATES

**Agent(s):** WATERMARK PATENT AND TRADE MARKS ATTORNEYS; DIMOCK STRATTON LLP; ESTUDIO CAREY LTDA; FRANCISCO CAREY CARVALLO; MCGREGOR JUDIT ESTER; KREMER VERONIQUE MARIE JOSEPHINE; DE ELZABURU ALBERTO; NAGAI HIROSHI; SPRUSON AND FERGUSON PTE LTD; THE PROCTER AND GAMBLE COMPANY, INTELLECTUAL PROPERTY DIVISION; PROCTER AND GAMBLE CO INTELLECTUAL PROPERTY DIVISION; PROCTER AND GAMBLE CO INTELLECTUAL PROPERTY DIVISION WEST BLDG; THE PROCTER AND GAMBLE COMPANY,GLOBAL LEGAL DEPARTMENT - IP; PROCTER AND GAMBLE CO GLOBAL LEGAL DEPARTMENT IP; THIBAULT; JAY A; AMANDA T; MEGAN C; ANDREW J; LAURA L; GEORGE H

**Designated states:** AE AG AL AM AT AU AZ BA BB BE BF BG BJ BR BY BZ CA CF CG CH CI CM CN CO CR CU CY CZ DE DK DM DZ EC EE ES FI FR GA GB GD GE GH GM GN GQ GR GW HR HU ID IE IL IN IS IT JP KE KG KP KR KZ LC LI LK LR LS LT LU LV MA MC MD MG MK ML MN MR MW MX MZ NE NL NO NZ OM PH PL PT RO RU SC SD SE SG SI SK SL SN SZ TD TG TJ TM TN TR TT TZ UA UG UZ VC VN YU ZA ZM ZW

**30) Family number: 30226909** (US2004019338A) © PatBase

**Title:** **ABSORBENT ARTICLES** CONTAINING **ABSORBENT CORES** HAVING ZONED ABSORBENCY AND METHODS OF MAKING SAME

**Abstract:**
Source: US2004019338A The present invention relates generally to an **absorbent core** for an **absorbent article**, and more particularly to an **absorbent core** having zoned absorbency due to specific placement of adhesives or specific lack of adhesive. Such **absorbent cores** provide the flexibility of creating precise zoning of particular properties throughout the core, and they provide improved comfort and fit.

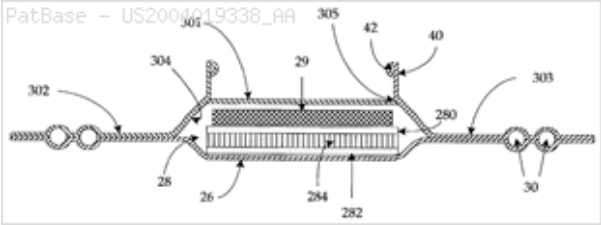


**Classifications:**
**International (IPC 8-9):** A61F13/15 A61F13/49 A61F13/494 A61F13/53 A61F13/56 A61F5/44 (Advanced/Invention);
A61F13/15 A61F13/56 A61F5/44 (Core/Invention)
**International (IPC 1-7):** A61F13/15 A61F13/20 A61F13/49 A61F13/494 A61F13/53 A61F13/56 A61F5/44
**CPC:** A61F13/535 A61F13/537 A61F2013/53051 A61F2013/53445
**European:** A61F13/535 K61F13/534C K61F13/535 K61F13/537 K61F13/53Q2
**US:** 604/367 604/367P 604/368 604/378 604/378S 604/379 604/380 604/382 604/385.01

**Family:**

| Publication number | Publication date | Application number | Application date |
|---|---|---|---|
| AU2003249293 AA | 20040209 | AU20030249293 | 20030717 |
| CA2492455 AA | 20050113 | CA20032492455 | 20030717 |
| CA2492455 C | 20110315 | CA20032492455 | 20030717 |
| EP1551345 A1 | 20050713 | EP20030765616 | 20030717 |
| JP2005533571 T2 | 20051110 | JP20040523459T | 20030717 |
| JP4518322 B2 | 20100804 | JP20040523459T | 20030717 |
| MXPA05000905 A1 | 20050323 | MX2005PA00905 | 20030717 |
| US2004019338 AA | 20040129 | US20020200334 | 20020723 |
| US7759540 BB | 20100720 | US20020200334 | 20020723 |
| WO04009008 A1 | 20040129 | WO2003US22218 | 20030717 |

**Priority:**
US20020200334 20020723 WO2003US22218 20030717

**Probable Assignee:** PARAGON TRADE BRANDS INC

**Assignee(s):** (std)**:** PARAGON TRADE BRANDS INC ; PARAGON TRADE BRANDS LLC

**Assignee(s):** BAKER ANDREW ; JP MORGAN CHASE BANK NA ; JPMORGAN CHASE NA ; LITVAY JOHN

**Inventor(s):** (std)**:** BAKER ANDREW ; LITVAY JOHN

**Inventor(s):** ANDREW BAKER ; JOHN LITVAY

**Agent(s):** PIASETZKI AND NENNIGER LLP; PIASETZKI NENNIGER KVAS LLP; AMSTER ROTHSTEIN AND EBENSTEIN LLP

**Designated states:** AE AG AL AM AT AU AZ BA BB BE BF BG BJ BR BY BZ CA CF CG CH CI CM CN CO CR CU CY CZ DE DK DM DZ EC EE ES FI FR GA GB GD GE GH GM GN GQ GR GW HR HU ID IE IL IN IS IT JP KE KG KP KR KZ LC LI LK LR LS LT LU LV MA MC MD MG MK ML MN MR MW MX MZ NE NL NO NZ OM PG PH PL PT RO RU SC SD SE SG SI SK SL SN SZ TD TG TJ TM TN TR TT TZ UA UG UZ VC VN YU ZA ZM ZW

**31) Family number: 30256783** (US2004024377A) © PatBase

**Title:** SANITARY ELASTICIZED MALE GUARD

**Abstract:**
Source: US2004024377A A disposable sanitary **absorbent** **article** such as an absorbent pad (e.g., male guard) is provided which is defined by opposed lateral sides and opposed longitudinal sides extending between said lateral side, comprising a topsheet, a backsheet and an **absorbent** **core** disposed therebetween having opposed lateral sides and opposed longitudinal sides extending between said lateral sides of said **absorbent** **core**, an adhesive layer attached to said backsheet and a release paper strip covering the adhesive layer. The longitudinal sides or edges of the pad define side flaps outwardly relative to the longitudinal sides of the **absorbent** **core**, and at least **two** spaced apart elastic members are secured along each longitudinal side flap, with each elastic member having **two** active ends, at least one of which is located outwardly relative to the corresponding end of the adhesive layer.

**Classifications:**
**International (IPC 8-9):** A61F13/15 A61F13/20 A61F13/471 A61F13/475 A61F13/534 (Advanced/Invention); A61F13/15 A61F13/20 (Core/Invention)
**International (IPC 1-7):** A61F13/15 A61F13/20
**CPC:** A61F13/475 A61F13/4752
**European:** A61F13/15B1M A61F13/475 A61F13/475A1
**US:** 604/367 604/367S 604/378 604/385.03 604/385.24 604/385.240P

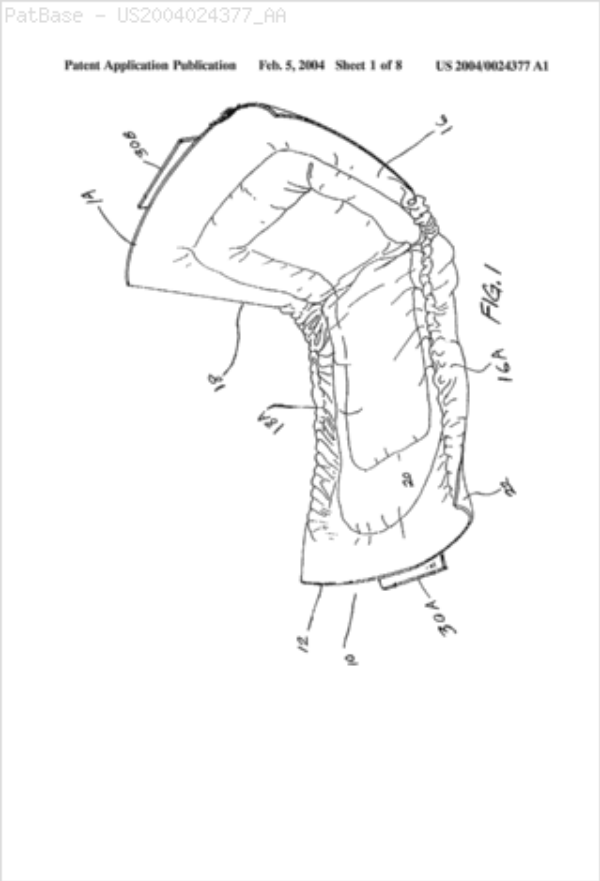


**Family:**

| Publication number | Publication date | Application number | Application date |
|---|---|---|---|
| US2004024377 AA | 20040205 | US20020208615 | 20020730 |
| US7172584 BB | 20070206 | US20020208615 | 20020730 |

**Priority:**
US20020208615 20020730

**Probable Assignee:** FIRST QUALITY PRODUCTS INC

**Assignee(s):** (std): FIRST QUALITY ENTPR INC ; FIRST QUALITY PRODUCTS INC

**Assignee(s):** FIRST QUALITY PRODUCTS INC AND FIRST QUALITY BABY ; FIRST QUALITY PRODUCTS INC AND FIRST QUALITY BABY PRODUCTS LLC ; JPMORGAN CHASE BANK NA ; JPMORGAN CHASE NA ; CITIZENS BANK OF PENNSYLVANIA ; FIRST QUALITY ENTERPRISES INC

**Inventor(s):** (std): KARAMI HAMZEH

**Agent(s):** AMSTER ROTHSTEIN AND EBENSTEIN LLP

**32) Family number: 30951667** (US2004177935A) © PatBase

**Title:** METHOD FOR MAKING CHEMICALLY CROSS-LINKED CELLULOSIC FIBER IN THE SHEET FORM

**Abstract:**
Source: US2004177935A The present invention is directed to cross-linked cellulosic fiber in the sheet from, obtainable by cross-linking a blend of mercerized pulp and conventional pulp. The method includes heating treated cellulosic fibers to promote intra-fiber cross-linking. The cross-linked fibers are characterized by an improved acquisition rate, resiliency, absorbency, and absorbency under load. Moreover, the inventive cross-linked fibers exhibit a reduction in centrifuge retention capacity, and have low knots, nits and fines contents. The cross-linked cellulosic fibers of the invention are useful in the **acquisition** **layer** and/or **absorbent** **core** of **absorbent** **articles**.

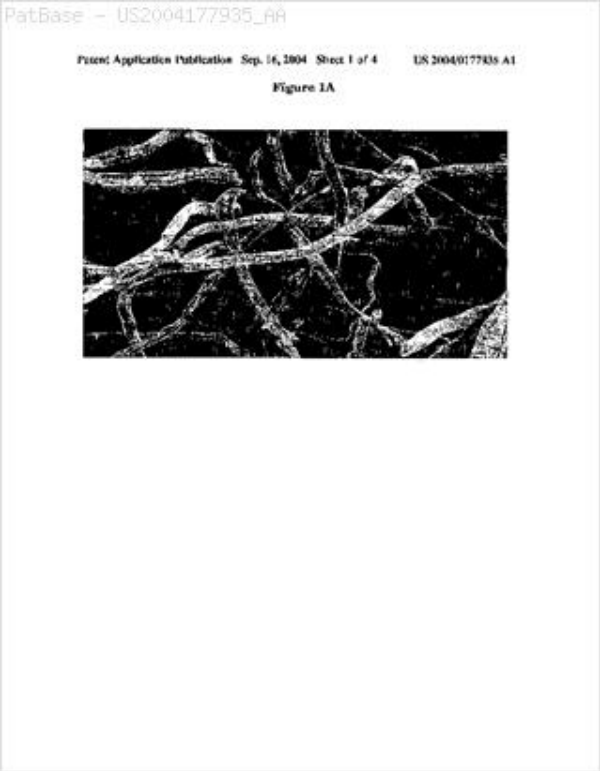


**Classifications:**
**International (IPC 8-9):** A61F13/15 A61L15/28 D21B1/00 D21C9/00 D21H11/18 D21H11/20 D21H17/39 (Advanced/Invention); A61F13/15 A61L15/16 D21C9/00 (Core/Invention)
**International (IPC 1-7):** D06M13/00 D06M13/192 D21B D21B1/00 D21C9/00 D21H11/18 D21H11/20 D21H17/39
**CPC:** A61F13/53 A61F13/537 A61L15/28 D21C9/002
**European:** A61F13/53 A61F13/537 A61L15/28 D21C9/00B2
**US:** 162/157.6 162/157.600S 162/9 162/9P 604/375 604/375S 604/378 604/378S 8/116.1 8/116.100S

**Family:**

| Publication number | Publication date | Application number | Application date |
|---|---|---|---|
| CA2518145 AA | 20050902 | CA20042518145 | 20040315 |
| EP1611279 A2 | 20060104 | EP20040720799 | 20040315 |
| EP1611279 A4 | 20071024 | EP20040720799 | 20040315 |
| US2004177935 AA | 20040916 | US20030387485 | 20030314 |
| US2005045290 AA | 20050303 | US20040965976 | 20041018 |
| WO04083518 A2 | 20040930 | WO2004US07728 | 20040315 |
| WO04083518 A3 | 20050106 | WO2004US07728 | 20040315 |

**Priority:**
US20030387485 20030314 WO2004US07728 20040315 US20040965976 20041018

**Probable Assignee:** RAYONIER PRODUCTS AND FINANCIAL SERVICES CO

**Assignee(s):** (std)**:** RAYONIER PROD AND FNCL SERV CO

**Assignee(s):** RAYONIER PRODUCTS AND FINANCIAL SERVICES CO ; RAYONIER PRODUCTS AND FINANCIAL SERVICES COMPANY ; SEARS KARL ; CHMIELEWSKI HARRY J ; HAMED OTHMAN A ; MURGUIA TINA R

**Inventor(s):** (std)**:** CHMIELEWSKI HARRY J ; HAMED OTHMAN A ; MURGUIA TINA R ; SEARS KARL

**Inventor(s):** CHMIELEWSKI HARRY ; MURGUIA TINA ; HAMED OTHMAN

**Agent(s):** BERESKIN AND PARR; HUNTON AND WILLIAMS LLP INTELLECTUAL PROPERTY DEPARTMENT

**Designated states:** AE AG AL AM AT AU AZ BA BB BE BF BG BJ BR BW BY BZ CA CF CG CH CI CM CN CO CR CU CY CZ DE DK DM DZ EC EE EG ES FI FR GA GB GD GE GH GM GN GQ GR GW HR HU ID IE IL IN IS IT JP KE KG KP KR KZ LC LI LK LR LS LT LU LV MA MC MD MG MK ML MN MR MW MX MZ NA NE NI NL NO NZ OM PG PH PL PT RO RU SC SD SE SG SI SK SL SN SY SZ TD TG TJ TM TN TR TT TZ UA UG US UZ VC VN YU ZA ZM ZW

**33) Family number: 31813489** (US2005079361A) © PatBase

**Title:** MATERIALS USEFUL IN MAKING CELLULOSIC ACQUISITION FIBERS IN SHEET FORM

**Abstract:**
Source: US2005079361A Embodiments of the invention relate to a modifying agent for making cellulosic based acquisition fibers in the sheet form, the modifying agent being the reaction product of a polycarboxylic acid compound and a polyfunctional epoxy compound. A method of producing the cellulosic based acquisition fiber in the sheet from using the modifying agent includes treating the cellulosic fibers in the sheet form with the modifying agent, and drying and curing the treated sheet to promote the formation of intra-fiber bonding. The resultant cellulosic based acquisition fiber may be utilized in an **acquisition layer** and/or an **absorbent core** of an **absorbent article**.

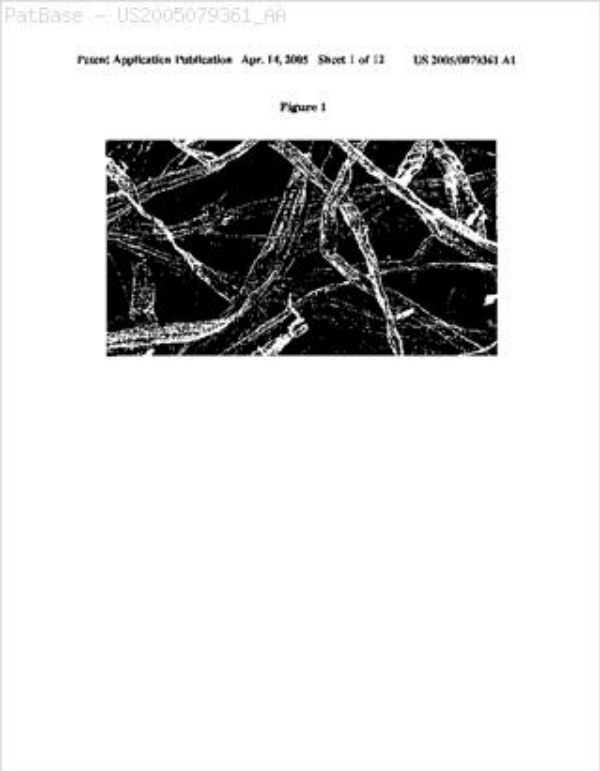


**Classifications:**
**International (IPC 8-9):** A61F13/15 A61L15/28 A61L15/60 B32B27/38 D04H1/40 D04H1/42 D06M15/00 D06M15/19 D06M15/55 D06M15/70 D21C3/02 D21C9/00 D21F11/00 D21H11/20 D21H21/10 D21H21/18 D21H21/22 D21H21/54 (Advanced/Invention); D06M101/06 (Advanced/Non-invention); A61F13/15 A61L15/16 B32B27/38 D04H1/40 D04H1/42 D06M15/00 D06M15/19 D06M15/37 D06M15/70 D21C3/00 D21C9/00 D21F11/00 D21H11/00 D21H21/00 D21H21/10 D21H21/14 D21H21/22 (Core/Invention); A61L (Subclass/Invention)
**International (IPC 1-7):** A61K8/18 A61L B32B27/38 D21F11/00
**CPC:** Y10T428/31511 A61F13/537 D21C9/005 D21H11/20
**European:** A61F13/537 D21C9/00B2D D21H11/20
**US:** 162/135 162/135S 162/158 162/158S 162/184 162/184S 428/413 428/413P 604/374 604/374S

**Family:**

| Publication number | Publication date | Application number | Application date |
|---|---|---|---|
| CA2539500 AA | 20060317 | CA20042539500 | 20041013 |
| CA2539500 C | 20130820 | CA20042539500 | 20041013 |
| CN1930345 A | 20070314 | CN200480030154 | 20041013 |
| EP1675556 A2 | 20060705 | EP20040794758 | 20041013 |
| EP1675556 A4 | 20100707 | EP20040794758 | 20041013 |
| JP2007515562 T2 | 20070614 | JP20060535579T | 20041013 |
| US2005079361 AA | 20050414 | US20030683164 | 20031014 |
| WO05037328 A2 | 20050428 | WO2004US33488 | 20041013 |
| WO05037328 A3 | 20060817 | WO2004US33488 | 20041013 |

**Priority:**
US20030683164 20031014 WO2004US33488 20041013

**Probable Assignee:** RAYONIER PRODUCTS AND FINANCIAL SERVICES CO

**Assignee(s):** (std): CHMIELEWSKI HARRY J ; HAMED OTHMAN A ; RAYONIER PROD AND FNCL SERV CO

**Assignee(s):** RAYONIER PRODUCTS AND FINANCIA ; RAYONIER PRODUCTS AND FINANCIAL SERVICES CO ; RAYONIER PRODUCTS AND FINANCIAL SERVICES COMPANY ; RAYONIER TRS HOLDINGS INC

**Inventor(s):** (std)**:** CHMIELEWSKI HARRY J ; HAMED OTHMAN A ; HAMED OTHMAN A CHMIELEWSKI HAR

**Inventor(s):** HAMED OTHMAN ; CHMIELEWSKI HARRY

**Agent(s):** BERESKIN AND PARR LLP SENCRL SRL; HUNTON AND WILLIAMS LLP INTELLECTUAL PROPERTY DEPARTMENT

**Designated states:** AE AG AL AM AT AU AZ BA BB BE BF BG BJ BR BW BY BZ CA CF CG CH CI CM CN CO CR CU CY CZ DE DK DM DZ EC EE EG ES FI FR GA GB GD GE GH GM GN GQ GR GW HR HU ID IE IL IN IS IT JP KE KG KP KR KZ LC LI LK LR LS LT LU LV MA MC MD MG MK ML MN MR MW MX MZ NA NE NI NL NO NZ OM PG PH PL PT RO RU SC SD SE SG SI SK SL SN SY SZ TD TG TJ TM TN TR TT TZ UA UG US UZ VC VN YU ZA ZM ZW

**34) Family number: 32286570** (US2005222547A) © PatBase

**Title:** DIAPER WITH IMPROVED BODY FIT

**Abstract:**
Source: US2005222547A An **absorbent** **article** that has a thin, conformable **absorbent** **core** where the core has at least **two** layers, both of which are substantially free of cellulosic fibers is described. The first layer is intended to provide storage for the majority of acquired fluids and has an AAP of at least about 20 g/g and the second layer, which provides temporary capacity for the bulk of the acquired fluid and permanent storage for at least a portion thereof, comprises a second absorbent polymer material which has a Wet Permeability of at least about 400x10 $^{-7}$ ($cm^3$ seconds)/g a ratio of Wet Permeability to SFC of at least about 1.5:1 with respect to the first absorbent polymer material.

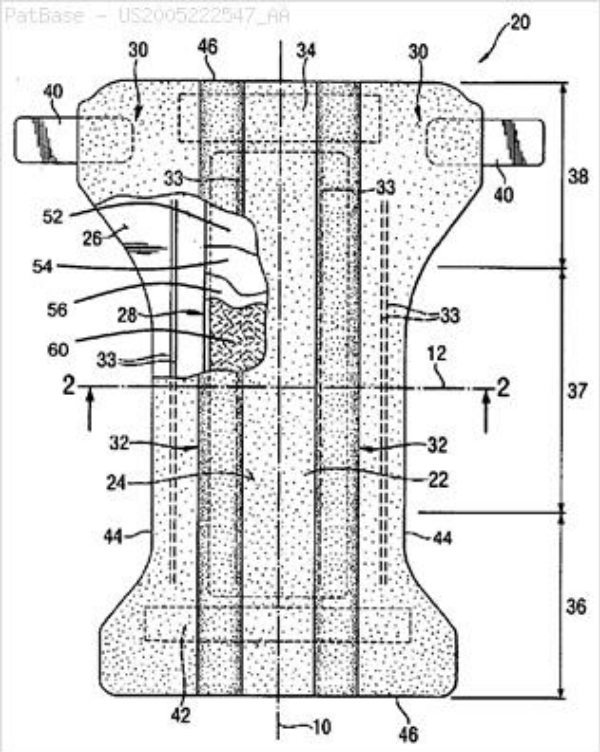


**Classifications:**
**International (IPC 8-9):** A61F13/15 A61F13/20 A61F13/49 A61F13/53 A61L15/60 B01J20/26 (Advanced/Invention); A61F13/15 A61L15/16 (Core/Invention)
**International (IPC 1-7):** A61F13/15 A61F13/49 A61F13/53 A61L15/60 B01J20/26
**CPC:** A61F13/15658 A61F13/534 A61F13/5376 A61F2013/15373 A61F2013/15422 A61F2013/530708 A61L15/60 A61F13/15634 A61F2013/53051 A61F2013/5307
**European:** A61F13/15M3C A61F13/15M3G A61F13/534 A61F13/537D A61L15/60 K61F13/15J8D1 K61F13/15J8H K61F13/53Q2 K61F13/53Q6 K61F13/53Q8
**US:** 604/367 604/368 604/368P 604/378 604/378S 604/381

**Family:**

| Publication number | Publication date | Application number | Application date |
|---|---|---|---|
| AT444051 E | 20091015 | AT20050734201T | 20050331 |
| CN100569203 C | 20091216 | CN200580009636 | 20050331 |
| CN1937978 A | 20070328 | CN200580009636 | 20050331 |
| DE602005016905 D1 | 20091112 | DE200560016905T | 20050331 |
| EP1729707 A1 | 20061213 | EP20050734201 | 20050331 |
| EP1729707 B1 | 20090930 | EP20050734201 | 20050331 |
| JP2005288265 A2 | 20051020 | JP20040105118 | 20040331 |
| JP2007531576 T2 | 20071108 | JP20070506309T | 20050331 |
| JP4790702 B2 | 20111012 | JP20070506309T | 20050331 |
| MXPA06011058 A1 | 20061231 | MX2006PA11058 | 20060926 |
| US2005222547 AA | 20051006 | US20050091255 | 20050328 |
| US8735646 BB | 20140527 | US20050091255 | 20050328 |
| WO05097025 A1 | 20051020 | WO2005US11079 | 20050331 |
| WO05097025 B1 | 20051124 | WO2005US11079 | 20050331 |

**Priority:**

JP20040105118 20040331 US20040612926P 20040924 US20050091255 20050328
WO2005US11079 20050331 JP20070506309 20050331

**Probable Assignee:** PROCTER AND GAMBLE CO

**Assignee(s):** (std)**:** BERUDA HOLGER ; IKEUCHI HIROYUKI ; IWAMURA TAKU ; MACHIDA SAYAKA ; NAKAGAWA YASUE ; PROCTER AND GAMBLE ; SCHMIDT MATTIAS ; TORII KAZUSHI ; SAKAMOTO SHIGERU

**Assignee(s):** THE PROCTER AND GAMBLE COMPANY ; PROCTER AND GAMBLE CO

**Inventor(s):** (std)**:** BERUDA HOLGER ; HIROYUKI IKEUCHI ; HOLGER BERUDA ; IKEUCHI HIROYUKI ; IWAMURA TAKU ; KAZUSHI TORII ; MACHIDA SAYAKA ; MATTIAS SCHMIDT ; NAKAGAWA YASUE ; SAKAMOTO SHIGERU ; SCHMIDT MATTIAS ; SHIGERU SAKAMOTO ; TAKU IWAMURA ; TORII ICHIJI ; TORII KAZUSHI ; YASUE NAKAGAWA

**Agent(s):** HEIDE UTE; NAGAI HIROSHI; THE PROCTER AND GAMBLE COMPANY, INTELLECTUAL PROPERTY DIVISION; PROCTER AND GAMBLE CO INTELLECTUAL PROPERTY DIVISION; ERIC T; ANDREW J; LAURA L

**Designated states:** AE AG AL AM AT AU AZ BA BB BE BF BG BJ BR BW BY BZ CA CF CG CH CI CM CN CO CR CU CY CZ DE DK DM DZ EC EE EG ES FI FR GA GB GD GE GH GM GN GQ GR GW HR HU ID IE IL IN IS IT JP KE KG KP KR KZ LC LI LK LR LS LT LU LV MA MC MD MG MK ML MN MR MW MX MZ NA NE NI NL NO NZ OM PG PH PL PT RO RU SC SD SE SG SI SK SL SM SN SY SZ TD TG TJ TM TN TR TT TZ UA UG US UZ VC VN YU ZA ZM ZW

**35) Family number: 32392880** (US2005247419A) © PatBase

**Title:** TREATMENT COMPOSITION FOR MAKING ACQUISITION FLUFF PULP IN SHEET FORM

**Abstract:**
Source: US2005247419A A treatment composition for producing acquisition fluff pulp, the treatment composition being a mixture of a cross-linking agent and a modifying agent. The cross-linking agent may be a polycarboxylic acid. The modifying agent may be a material that is water soluble non-anionic, non-polymeric material, and can function as debonder and plasticizer. A method of producing acquisition fluff pulp using the treatment composition involves treating a cellulosic base fiber with a treatment composition solution to impregnate the fiber with the treatment composition, and then drying and curing the impregnated fiber. The resultant acquisition fluff pulp may be utilized in an **acquisition** **layer** and/or an **absorbent** **core** of an **absorbent** **article** intended for body waste management.

**Classifications:**
**International (IPC 8-9):** A61F13/00 A61L15/60 B01J20/24 B01J20/28 D06M11/00 D06M11/05 D06M13/19 D06M13/192 D21C9/00 D21H11/20 D21H17/15 D21H21/18 D21H23/04 (Advanced/Invention);
A61F13/00 A61L15/16 B01J20/22 B01J20/28 D06M11/00 D06M13/00 D21C9/00 D21H11/00 D21H17/00 D21H21/14 D21H23/00 (Core/Invention)
**International (IPC 1-7):** B01J20/24 B01J20/28 D06M11/06 D06M13/192 D21H11/20
**CPC:** A61L15/60 D21C9/005
**European:** A61L15/60 D21C9/00B2D D21H11/20
**US:** 162/157.6 162/9 604/378 8/116.1

**Family:**

| Publication number | Publication date | Application number | Application date |
|---|---|---|---|
| EP1745175 A2 | 20070124 | EP20050740985 | 20050506 |
| EP1745175 A4 | 20090708 | EP20050740985 | 20050506 |
| US2005247419 AA | 20051110 | US20040839715 | 20040506 |
| WO05108669 A2 | 20051117 | WO2005US15665 | 20050506 |
| WO05108669 A3 | 20071004 | WO2005US15665 | 20050506 |

**Priority:**
US20040839715 20040506 WO2005US15665 20050506

**Probable Assignee:** RAYONIER PRODUCTS AND FINANCIAL SERVICES CO

**Assignee(s):** (std): HAEUSSLER MICHAEL ; HAMED OTHMAN A ; RAYONIER PROD AND FNCL SERV CO ; RAYONIER TRS HOLDINGS INC

**Assignee(s):** RAYONIER PRODUCTS AND FINANCIAL SERVICES CO ; RAYONIER PRODUCTS AND FINANCIAL SERVICES COMPANY

**Inventor(s):** (std): HAEUSSLER MICHAEL ; HAMED OTHMAN A

**Inventor(s):** HAMED OTHMAN

**Agent(s):** HUNTON AND WILLIAMS LLP, INTELLECTUAL PROPERTY DEPARTMENT; HUNTON AND WILLIAMS LLP INTELLECTUAL PROPERTY DEPARTMENT

**Designated states:** AE AG AL AM AT AU AZ BA BB BE BF BG BJ BR BW BY BZ CA CF CG CH CI CM CN CO CR CU CY CZ DE DK DM DZ EC EE EG ES FI FR GA GB GD GE GH GM GN GQ GR GW HR HU ID IE IL IN IS IT JP KE KG KM KP KR KZ LC LI LK LR LS LT LU LV MA MC MD MG MK ML MN MR MW MX MZ NA NE NI NL NO NZ OM PG PH PL PT RO RU SC SD SE SG SI SK SL SM SN SY SZ TD TG TJ TM TN TR TT TZ UA UG US UZ VC VN YU ZA ZM ZW

**36) Family number: 32578248** (US2006020250A) © PatBase

**Title:** ABSORBENT STRUCTURE

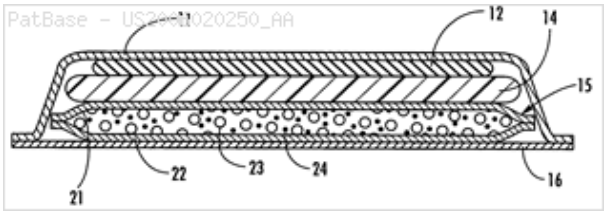


**Abstract:**
Source: US2006020250A An **absorbent** **article** is provided comprising a topsheet, a backsheet, and an **absorbent** **core** positioned between the topsheet and the backsheet, wherein the **absorbent** **core** comprises particles of **superabsorbent** polymer. An **acquisition** **layer** is positioned between the topsheet and the **absorbent** **core** for receiving and distributing fluid insults for absorption by the **absorbent** **core**. A temporary storage layer is positioned between the **acquisition** **layer** and the **absorbent** **core**, the temporary storage layer comprising a nonwoven fabric having a capacity to receive and temporarily hold the fluid insults in proximity to the **absorbent** **core** for a sufficient time for the fluid insults to be absorbed by the **superabsorbent** polymer in the **absorbent** **core**. In one advantageous embodiment, the **acquisition** **layer** has a calculated average pore size greater than 100 mum and the temporary storage layer has a calculated average pore size less than 100 mum.

**Classifications:**
**International (IPC 8-9):** A61F13/15 A61F13/537 (Advanced/Invention); A61F13/15 (Core/Invention)
**International (IPC 1-7):** A61F13/537
**CPC:** A61F13/53747 A61F2013/15495 A61F2013/15504 A61F2013/53721
**European:** A61F13/537C2 K61F13/15J8P1 K61F13/15J8P2 K61F13/537B5
**US:** 604/378 604/378P

**Family:**

| Publication number | Publication date | Application number | Application date |
|---|---|---|---|
| EP1778154 A1 | 20070502 | EP20050773507 | 20050721 |
| MX2007000876 A1 | 20070312 | MX20070000876 | 20050721 |
| US2006020250 AA | 20060126 | US20050136796 | 20050525 |
| WO06012481 A1 | 20060202 | WO2005US25985 | 20050721 |

**Priority:**

US20040590840P 20040723 US20040606559P 20040902 WO2005US25985 20050721 US20050136796 20050525

**Probable Assignee:** BBA NONWOVENS SIMPSONVILLE INC

**Assignee(s):** (std): BAER SAMUEL CHARLES ; BBA NONWOVENS SIMPSONVILLE INC ; CHESTER STEPHEN O

**Inventor(s):** (std): BAER SAMUEL C ; BAER SAMUEL CHARLES ; CHESTER STEPHEN O

**Inventor(s):** BAER SAMUEL ; CHESTER STEPHEN

**Agent(s):** ALSTON AND BIRD LLP, BANK OF AMERICA PLAZA; ALSTON AND BIRD LLP BANK OF AMERICA PLAZA

**Designated states:** AE AG AL AM AT AU AZ BA BB BE BF BG BJ BR BW BY BZ CA CF CG CH CI CM CN CO CR CU CY CZ DE DK DM DZ EC EE EG ES FI FR GA GB GD GE GH GM GN GQ GR GW HR HU ID IE IL IN IS IT JP KE KG KM KP KR KZ LC LI LK LR LS LT LU LV MA MC MD MG MK ML MN MR MW MX MZ NA NE NG NI NL NO NZ OM PG PH PL PT RO RU SC SD SE SG SI SK SL SM SN SY SZ TD TG TJ TM TN TR TT TZ UA UG US UZ VC VN YU ZA ZM ZW

**37) Family number: 33214839** (US2006184147A) © PatBase

**Title:** TREATMENT COMPOSITION FOR MAKING ACQUISITION FLUFF PULP IN SHEET FORM

**Abstract:**
Source: US2006184147A A treatment composition for making acquisition fluff pulp in sheet form, having a cross-linking agent and an anti-hydrogen-bonding agent. The cross-linking agent may be a polycarboxylic acid, aldehyde, urea-based derivatives or a mixture thereof. The anti-hydrogen-bonding agent may be a silicon polymer terminated with at least one quaternary amine functional group. A method of making acquisition fluff pulp using the treatment composition involves treating a cellulosic base fiber with a treatment composition solution to impregnate the fiber with the treatment composition, and then drying and curing the impregnated fiber. The resultant acquisition fluff pulp may be utilized in an **acquisition** **layer** and/or an **absorbent** **core** of an **absorbent** **article** intended for body waste management.

**Classifications:**
**International (IPC 8-9):** A61F13/15 C08G77/00 C08G77/26 C08L67/00 C08L83/00 D06M13/32 D06M13/322 (Advanced/Invention);
C08G77/00 (Advanced/Non-invention);
C08G77/00 D06M13/00 (Core/Invention)
**CPC:** Y10S8/01 C08L83/06 A61F13/15617 A61F13/5376 A61L15/60 C08K5/092 C08L83/08 D21C9/002 A61F2013/530007
**European:** A61F13/15M3 A61F13/537D A61L15/60 C08L83/06 C08L83/08 D21C9/00B2 K61F13/53L M08K5/092
**US:** 252/182.14 252/182.3 525/100 525/100S 525/33 525/33S 528/25 528/26 528/28 528/38 604/367 604/367P 8/188 8/DIG.1 81/88

**Family:**

| Publication number | Publication date | Application number | Application date |
|---|---|---|---|
| US2006184147 AA | 20060817 | US20050058213 | 20050216 |
| US7312297 BB | 20071225 | US20050058213 | 20050216 |
| WO06088995 A2 | 20060824 | WO2006US05417 | 20060216 |
| WO06088995 A3 | 20070104 | WO2006US05417 | 20060216 |

**Priority:**

US20050058213 20050216

**Probable Assignee:** RAYONIER PERFORMANCE FIBERS LLC

**Assignee(s):** (std)**:** HAMED OTHMAN A ; RAYIONER TRS HOLDINGS INC ; RAYONIER TRS HOLDINGS INC

**Assignee(s):** RAYONIER PERFORMANCE FIBERS LLC

**Inventor(s):** (std)**:** HAMED OTHMAN A

**Inventor(s):** HAMED OTHMAN

**Agent(s):** HUNTON AND WILLIAMS LLP, INTELLECTUAL PROPERTY DEPARTMENT; HUNTON AND WILLIAMS LLP INTELLECTUAL PROPERTY DEPARTMENT; HUNTON AND WILLIAMS LLP

**Designated states:** AE AG AL AM AT AU AZ BA BB BE BF BG BJ BR BW BY BZ CA CF CG CH CI CM CN CO CR CU CY CZ DE DK DM DZ EC EE EG ES FI FR GA GB GD GE GH GM GN GQ GR GW HR HU ID IE IL IN IS IT JP KE KG KM KN KP KR KZ LC LK LR LS LT LU LV LY MA MC MD MG MK ML MN MR MW MX MZ NA NE NG NI NL NO NZ OM PG PH PL PT RO RU SC SD SE SG SI SK SL SM SN SY SZ TD TG TJ TM TN TR TT TZ UA UG US UZ VC VN YU ZA ZM ZW

**38) Family number: 33452983** (WO06105305A1) © PatBase

**Title:** **ABSORBENT** **ARTICLE** CONTAINING A DENSITY GRADIENT IN AT LEAST **TWO** DIRECTIONS, AND METHOD FOR THE MANUFACTURE THEREOF

**Abstract:**
An **absorbent** **article** includes a liquid permeable cover, a baffle material, and an absorbent structure disposed between the cover and baffle material. The absorbent structure includes a retention zone having a varying density gradient in at least **two** dimensions and a protection zone having a portion with a density less than a minimum density of the density gradient in the retention zone. The retention zone may be defined in a first region of the absorbent structure having a first basis weight and the protection zone may be defined in a second region of the absorbent structure having a second basis weight that is greater than the first basis weight.

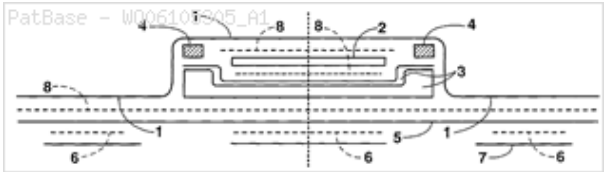


**Classifications:**
**International (IPC 8-9):** A61F13/15 (Advanced/Invention); A61F13/15 (Core/Invention)
**International (IPC 1-7):** A61F113/00 A61F13/15 A61F13/475
**CPC:** A61F13/532 A61F13/533
**European:** A61F13/532 A61F13/533

**Family:**

| Publication number | Publication date | Application number | Application date |
|---|---|---|---|
| AR055896 AA | 20070912 | AR2006P101251 | 20060330 |
| AU2006230380 AA | 20061005 | AU20060230380 | 20060330 |
| BRPI0501157 A | 20061128 | BR2005PI01157 | 20050331 |
| BRPI0501157 C1 | 20070221 | BR2005PI01157 | 20050331 |
| CR9362 A | 20080303 | CR20070009362 | 20070904 |
| KR20070118238 A | 20071214 | KR20077022157 | 20070928 |
| MX2007011970 A1 | 20071210 | MX20070011970 | 20060330 |
| PE14652006 A1 | 20070116 | PE20060000352 | 20060330 |
| WO06105305 A1 | 20061005 | WO2006US11664 | 20060330 |

**Priority:**

BR2005PI01157 20050331 WO2006US11664 20060330

**Probable Assignee:** KIMBERLY CLARK KENKO IND E COM

**Assignee(s):** (std): BASTOS ROGERIO BANDEIRA ; BUIATTI CLAUDIO MALAGONI ; KIM DOOHONG ; KIMBERLY CLARK CO ; KIMBERLY CLARK CORP ; KIMBERLY CLARK KENKO IND E COM ; PURISIMA RAQUEL ; PERALTA JOEY N ; RUIZ JENNY VARGAS ; PEREIRA CASSIANO FREGAPANI ; KIMBERLY CLARK KENKO INDUSTRIA E COMERCIO LTDA ; KIMBERLY CLARK KENKO IND E COM LTDA

**Assignee(s):** KIMBERLY CLARK WORLDWIDE INC

**Inventor(s):** (std): BANDEIRA BASTOS ROGERIO ; BASTOS ROGERIO BANDEIRA ; BUIATTI CLAUDIO MALAGONI ; CASSIANO FREGAPANI PEREIRA ; CLAUDIO MALAGONI BUIATTI ; DOO HONG KIM ; DOOHONG KIM ; DOOHONG KIN ; FREGAPANI PEREIRA CASSIANO ; JENNY VARGAS RUIZ ; JOEY N PERALTA ; KIM DOO HONG ; KIM DOOHONG ; MALAGONI BUIATTI CLAUDIO ; PERALTA JOEY N ; PERALTA JOFY N ; PEREIRA CASSIANO FREGAPANI ; PURISIMA RAQUEL ; RAQUEL PURISIMA ; ROGERIO BANDEIRA BASTOS ; ROGERIO BANDERINA BASTOS ; RUIZ JENNY VARGAS ; VARGAS RUIZ JENNY

**Inventor(s):** JOFY N PERALTA

**Agent(s):** SPRUSON AND FERGUSON

**Designated states:** AE AG AL AM AT AU AZ BA BB BE BF BG BJ BR BW BY BZ CA CF CG CH CI CM CN CO CR CU CY CZ DE DK DM DZ EC EE EG ES FI FR GA GB GD GE GH GM GN

GQ GR GW HR HU ID IE IL IN IS IT JP KE KG KM KN KP KR KZ LC LK LR LS LT LU LV LY MA MC MD MG MK ML MN MR MW MX MZ NA NE NG NI NL NO NZ OM PG PH PL PT RO RU SC SD SE SG SI SK SL SM SN SY SZ TD TG TJ TM TN TR TT TZ UA UG US UZ VC VN YU ZA ZM ZW

**39) Family number: 34174374** (US2007027435A) © PatBase

**Title:** FLEXIBLE **ABSORBENT** **ARTICLE** WITH IMPROVED BODY FIT

**Abstract:**
Source: US2007027435A An **absorbent** **article** that has a thin, conformable **absorbent** **core** where the core has at least **two** layers, both of which includes (different) **superabsorbent** material and both being typically substantially free of cellulosic fibres is described. The **absorbent** **article** has a Circular Bend Flexibility of less than about 15 N and typically a an acquisition rate on the third gush of less than about 170 seconds and/or on the fourth gush of less than about 190 seconds.

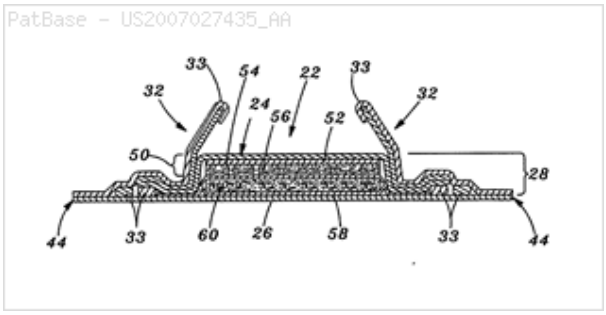


**Classifications:**
**International (IPC 8-9):** A61F13/15 A61F13/20 A61F13/49 A61F13/505 A61F13/53 (Advanced/Invention); A61F13/15 (Core/Invention)
**CPC:** A61F13/15203 A61F13/15658 A61F13/15699 A61F13/534 A61F13/5376 A61F2013/15357 A61F2013/15373 A61F2013/15463 A61F2013/1552 A61F2013/15422 A61F2013/530481 A61F2013/530547
**European:** A61F13/15J A61F13/15M3G A61F13/15M5 A61F13/534 A61F13/537D K61F13/15J8C K61F13/15J8D1 K61F13/15J8H K61F13/15J8M K61F13/15J8P5 K61F13/53Q K61F13/53Q2E
**US:** 604/365 604/366 604/367 604/367S 604/368 604/368P 604/370 604/370S 604/374 604/378 604/378P 604/385.01 604/385.010S 604/385.101 604/385.14 604/385.140P 604/385.201

**Family:**

| Publication number | Publication date | Application number | Application date |
|---|---|---|---|
| AT494871 E | 20110115 | AT20060774694T | 20060726 |
| AT523179 E | 20110915 | AT20060774693T | 20060726 |
| CA2616901 AA | 20080123 | CA20062616901 | 20060726 |
| CA2616901 C | 20111025 | CA20062616901 | 20060726 |
| CA2616903 AA | 20080123 | CA20062616903 | 20060726 |
| CA2616903 C | 20130611 | CA20062616903 | 20060726 |
| CA2616904 AA | 20080123 | CA20062616904 | 20060726 |
| CA2616904 C | 20110920 | CA20062616904 | 20060726 |
| CN101227878 A | 20080723 | CN200680026915 | 20060726 |
| CN101227879 A | 20080723 | CN200680026916 | 20060726 |
| CN101227880 A | 20080723 | CN200680026979 | 20060726 |
| DE602006019603 D1 | 20110224 | DE200660019603T | 20060726 |
| EP1912602 A1 | 20080423 | EP20060774693 | 20060726 |
| EP1912602 B1 | 20110907 | EP20060774693 | 20060726 |
| EP1912603 A1 | 20080423 | EP20060774694 | 20060726 |
| EP1912603 B1 | 20110112 | EP20060774694 | 20060726 |
| EP1912604 A1 | 20080423 | EP20060788490 | 20060726 |
| JP2009502260 T2 | 20090129 | JP20080523047T | 20060726 |
| JP2009502339 T2 | 20090129 | JP20080524084T | 20060726 |
| JP2009502340 T2 | 20090129 | JP20080524085T | 20060726 |
| JP4647692 B2 | 20110309 | JP20080523047T | 20060726 |
| JP4658197 B2 | 20110323 | JP20080524084T | 20060726 |
| JP4739415 B2 | 20110803 | JP20080524085T | 20060726 |
| MX2008001102 A1 | 20080311 | MX20080001102 | 20060726 |
| MX2008001103 A1 | 20080311 | MX20080001103 | 20060726 |
| MX2008001104 A1 | 20080311 | MX20080001104 | 20060726 |

| | | | |
|---|---|---|---|
| US2007027435 AA | 20070201 | US20060493404 | 20060726 |
| US2007027436 AA | 20070201 | US20060493406 | 20060726 |
| US2008021426 AA | 20080124 | US20060492185 | 20060724 |
| US2010160888 AA | 20100624 | US20100713231 | 20100226 |
| US7699825 BB | 20100420 | US20060492185 | 20060724 |
| US7837662 BB | 20101123 | US20060493404 | 20060726 |
| US7851669 BB | 20101214 | US20060493406 | 20060726 |
| US8231593 BB | 20120731 | US20100713231 | 20100226 |
| WO07014233 A1 | 20070201 | WO2006US28924 | 20060726 |
| WO07014234 A1 | 20070201 | WO2006US28925 | 20060726 |
| WO07014235 A1 | 20070201 | WO2006US28926 | 20060726 |

**Priority:**

| | | | | | |
|---|---|---|---|---|---|
| US20050702437P | 20050726 | US20060812766P | 20060612 | US20060492185 | 20060724 |
| US20060493404 | 20060726 | WO2006US28926 | 20060726 | US20060812767P | 20060612 |
| US20100713231 | 20100226 | WO2006US28924 | 20060726 | WO2006US28925 | 20060726 |
| US20060493406 | 20060726 | | | | |

**Probable Assignee:** PROCTER AND GAMBLE

**Assignee(s):** (std)**:** BERUDA HOLGER ; NAKAGAWA YASUE ; PROCTER AND GAMBLE ; SCHMIDT MATTIAS

**Assignee(s):** THE PROCTER AND GAMBLE COMPANY ; PROCTER AND GAMBLE CO

**Inventor(s):** (std)**:** BERUDA HOLGER ; HOLGER BERUDA ; MATTIAS SCHMIDT ; NAKAGAWA YASUE ; SCHMIDT MATTIAS ; YASUE NAKAGAWA

**Agent(s):** DIMOCK STRATTON LLP; KREMER VERONIQUE MARIE JOSEPHINE; MCGREGOR JUDIT ESTER; NAGAI HIROSHI; THE PROCTER AND GAMBLE COMPANY, INTELLECTUAL PROPERTY DIVISION; PROCTER AND GAMBLE CO INTELLECTUAL PROPERTY DIVISION; PROCTER AND GAMBLE CO INTELLECTUAL PROPERTY DIVISION WEST BLDG; THE PROCTER AND GAMBLE COMPANY,GLOBAL LEGAL DEPARTMENT - IP; PROCTER AND GAMBLE CO GLOBAL LEGAL DEPARTMENT IP; LAURA L; THIBAULT; AMY M; ANDREW A

**Designated states:** AE AG AL AM AT AU AZ BA BB BE BF BG BJ BR BW BY BZ CA CF CG CH CI CM CN CO CR CU CY CZ DE DK DM DZ EC EE EG ES FI FR GA GB GD GE GH GM GN GQ GR GW HN HR HU ID IE IL IN IS IT JP KE KG KM KN KP KR KZ LA LC LI LK LR LS LT LU LV LY MA MC MD MG MK ML MN MR MW MX MZ NA NE NG NI NL NO NZ OM PG PH PL PT RO RS RU SC SD SE SG SI SK SL SM SN SY SZ TD TG TJ TM TN TR TT TZ UA UG US UZ VC VN ZA ZM ZW

**40) Family number: 34288957** (US2007043330A) © PatBase

**Title:** **ABSORBENT ARTICLE**

**Abstract:**
Source: US2007043330A An **absorbent** **article** for wearing about the lower torso of a wearer includes a topsheet, a backsheet joined to at least a portion of the topsheet, and an **absorbent** **core** disposed between the topsheet and the backsheet. The **absorbent** **core** includes a first layer and a second layer, wherein the first layer is disposed in fluid communication with the second layer. The first layer has a first shape and the second layer has a second shape. The first shape is different from the second shape. Each of the first layer and second layer comprise less than about 20 percent airfelt.

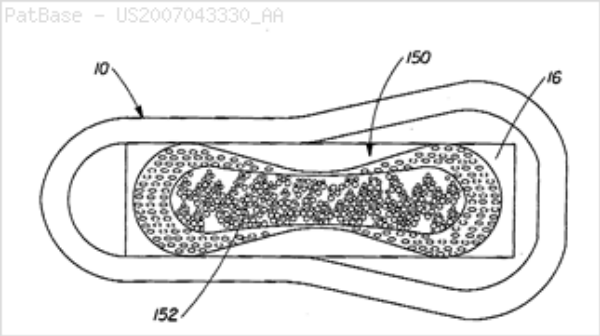


**Classifications:**
**International (IPC 8-9):** A61F13/15 A61F13/47 A61F13/49 A61F13/513 A61F13/53 A61F13/531 A61F13/534 A61F13/535 A61F13/537 A61F13/56 A61F13/84 A61L15/28 (Advanced/Invention); A61F13/15 (Core/Invention)
**CPC:** A61L15/28 A61F2013/5315 A61F13/535 A61F2013/1539 A61F13/53756 A61F13/5611 A61F13/4704 A61F13/51394 A61F2013/51026 A61F13/531 A61F13/84 A61F13/53713
**European:** A61F13/531 A61F13/535 K61F13/15J8D2
**US:** 604/366 604/367 604/367S 604/370 604/375 604/378 604/378P

**Family:**

| Publication number | Publication date | Application number | Application date |
|---|---|---|---|
| CA2619574 AA | 20080215 | CA20062619574 | 20060818 |
| CN101242795 A | 20080813 | CN200680030287 | 20060818 |
| CN101242795 B | 20120620 | CN200680030287 | 20060818 |
| EP1915118 A1 | 20080430 | EP20060801962 | 20060818 |
| JP2009504347 T2 | 20090205 | JP20080527200T | 20060818 |
| JP3171928 U | 20111124 | JP20110005329U | 20110912 |
| MX2008002254 A1 | 20080327 | MX20080002254 | 20060818 |
| US2007043330 AA | 20070222 | US20060506387 | 20060818 |
| US2015094677 AA | 20150402 | US20140542714 | 20141117 |
| US2015100035 AA | 20150409 | US20140546075 | 20141118 |
| US2015105743 AA | 20150416 | US20140575417 | 20141218 |
| US2016030260 AA | 20160204 | US20150882488 | 20151014 |
| WO07022486 A1 | 20070222 | WO2006US32537 | 20060818 |

**Priority:**

| | | | | | |
|---|---|---|---|---|---|
| US20050710032P | 20050819 | US20060818109P | 20060630 | WO2006US32537 | 20060818 |
| US20060506387 | 20060818 | JP20080527200 | 20060818 | JP20080527200T | 20060818 |
| US20140542714 | 20141117 | US20140546075 | 20141118 | US20140575417 | 20141218 |
| US20150882488 | 20151014 | | | | |

**Probable Assignee:** PROCTER AND GAMBLE CO

**Assignee(s):** (std): BULLOCK STEVEN S ; BULLOCK STEVEN STUART ; HEKI YUKIO ; HOLLENBERG NIELS ; IWATA TOSHIYUKI ; KONDO MASAHIRO ; LANKHOF JOHN P ; LANKHOF JOHN PETER ; PROCTER AND GAMBLE

**Assignee(s):** THE PROCTER AND GAMBLE COMPANY ; PROCTER AND GAMBLE CO

**Inventor(s):** (std): BULLOCK STEVEN S ; BULLOCK STEVEN STUART ; HEKI YUKIO ; HOLLENBERG NIELS ; IWATA TOSHIYUKI ; LANKHOF JOHN P ; LANKHOF JOHN PETER ; MASAHIRO KONDO ; NIELS HOLLENBERG ; PETER LANKHOF JOHN ; KONDO MASAHIRO ; STUART BULLOCK STEVEN ; TOSHIYUKI IWATA ; YUKIO HEKI

**Inventor(s):** LANKHOF JOHN ; BULLOCK STEVEN ; STEVEN STUART BULLOCK ; JOHN PETER LANKHOF

**Agent(s):** MBM INTELLECTUAL PROPERTY LAW LLP; KREMER VERONIQUE MARIE JOSEPHINE; NAGAI HIROSHI; THE PROCTER AND GAMBLE COMPANY, INTELLECTUAL PROPERTY DIVISION; PROCTER AND GAMBLE CO INTELLECTUAL PROPERTY DIVISION

**Designated states:** AE AG AL AM AT AU AZ BA BB BE BF BG BJ BR BW BY BZ CA CF CG CH CI CM CN CO CR CU CY CZ DE DK DM DZ EC EE EG ES FI FR GA GB GD GE GH GM GN GQ GR GW HN HR HU ID IE IL IN IS IT JP KE KG KM KN KP KR KZ LA LC LI LK LR LS LT LU LV LY MA MC MD MG MK ML MN MR MW MX MY MZ NA NE NG NI NL NO NZ OM PG PH PL PT RO RS RU SC SD SE SG SI SK SL SM SN SV SY SZ TD TG TJ TM TN TR TT TZ UA UG US UZ VC VN ZA ZM ZW

**41) Family number: 42978446** (US2009062760A) © PatBase

**Title:** **ABSORBENT** **ARTICLE** WITH A SLITTED **ABSORBENT** **CORE**

**Abstract:**
Source: US2009062760A The invention relates to slit **absorbent** **articles** and the use of slits in absorbent materials to provide improved liquid intake rate, flexibility and softness compared to the unmodified material. The absorbent material, including **superabsorbent** materials, are particularly useful as **absorbent** **cores** in disposable **absorbent** **articles** such as diapers, incontinent products, sanitary napkins and the like.

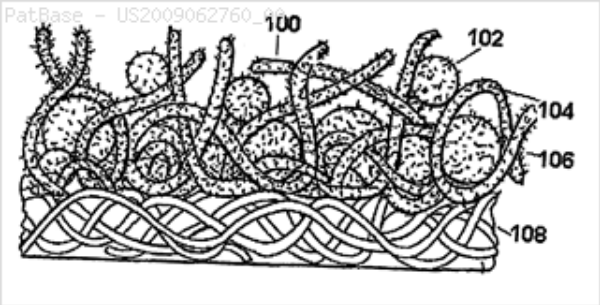


**Classifications:**
**International (IPC 8-9):** A61F13/15 A61F13/45 A61F13/47 A61F13/49 A61F13/53 A61F13/534 A61F13/537 A61F13/538 B32B38/04 (Advanced/Invention); A61F13/15 B32B38/04 (Core/Invention)
**CPC:** A61F13/15731 A61F13/4704 A61F13/49001 A61F13/53409 A61F13/53713 A61F13/53717 A61F13/53747 A61F13/538 A61F2013/15406 A61F2013/15504 A61F2013/4568 A61F2013/5307 A61F2013/53782 A61F2013/53791 B32B2038/045 Y10T156/1026 Y10T156/1082 A61F13/15642 A61F13/15747 A61F13/15723 B32B38/04 Y10T29/49826 A61F2013/530496
**European:** A61F13/15M6B A61F13/15M6C A61F13/47B A61F13/49A A61F13/534B A61F13/537B2 A61F13/537B4 A61F13/537C2 A61F13/538 B32B38/04 K61F13/15J8E K61F13/15J8P2 K61F13/15J8T2 K61F13/45C4 K61F13/537E4 K61F13/537G K61F13/53Q1 K61F13/53Q6 L32B38/04B
**US:** 156/211 156/211S 156/268 156/268S 29/428 604/367 604/367P 604/378 604/378S 604/379 604/380 604/383 604/385.23 604/385.230S

**Family:**

| Publication number | Publication date | Application number | Application date |
|---|---|---|---|
| CA2690503 AA | 20090416 | CA20082690503 | 20080612 |
| CA2690503 C | 20151027 | CA20082690503 | 20080612 |
| CN101795648 A | 20100804 | CN200880102735 | 20080612 |
| EP2173298 A1 | 20100414 | EP20080762850 | 20080612 |
| EP2173298 B1 | 20140820 | EP20080762850 | 20080612 |
| ES2524362 T3 | 20141205 | ES20080762850T | 20080612 |
| MX2009013415 A1 | 20100209 | MX20090013415 | 20080612 |
| US2009062760 AA | 20090305 | US20080138112 | 20080612 |
| US2015040367 AA | 20150212 | US20140336864 | 20140721 |
| US8785715 BB | 20140722 | US20080138112 | 20080612 |
| WO09047596 A1 | 20090416 | WO2008IB01517 | 20080612 |

**Priority:**

US20070943321P 20070612 US20080138112 20080612 WO2008IB01517 20080612
EP20080762850 20080612 US20140336864 20140721

**Probable Assignee:** DSG TECHNOLOGY HOLDINGS LTD

**Assignee(s):** (std): DSG TECHNOLOGY HOLDINGS LTD ; TSANG PATRICK KING YU ; WRIGHT ANDREW

**Inventor(s):** (std): ANDREW WRIGHT ; TSANG PATRICK KING YU ; WRIGHT ANDREW ; YU TSANG PATRICK KING

**Inventor(s):** PATRICK KING YU TSANG

**Agent(s):** NORTON ROSE FULBRIGHT CANADA LLP SENCRL SRL; WOODS GEOFFREY CORLETT; PONS ANGEL; FULBRIGHT AND JAWORSKI LLP

**Designated states:** AE AG AL AM AO AT AU AZ BA BB BE BF BG BH BJ BR BW BY BZ CA CF CG CH

CI CM CN CO CR CU CY CZ DE DK DM DO DZ EC EE EG ES FI FR GA GB GD GE GH GM GN GQ GR GT GW HN HR HU ID IE IL IN IS IT JP KE KG KM KN KP KR KZ LA LC LI LK LR LS LT LU LV LY MA MC MD ME MG MK ML MN MR MT MW MX MY MZ NA NE NG NI NL NO NZ OM PG PH PL PT RO RS RU SC SD SE SG SI SK SL SM SN SV SY SZ TD TG TJ TM TN TR TT TZ UA UG US UZ VC VN ZA ZM ZW

**42) Family number: 44120873** (US2011073513A) © PatBase

**Title:** ABSORBENT PRODUCTS HAVING IMPROVED PACKAGING EFFICIENCY

**Abstract:**
Source: US2011073513A An absorbent product is provided. The absorbent product includes a package having an interior space and an exterior surface; and a plurality of disposable **absorbent articles** disposed within the interior space of the package. Each of the disposable **absorbent articles** has a topsheet; a backsheet; a substantially cellulose free **absorbent core** located between the topsheet and the backsheet; a first waist region; a second waist region; a crotch region extending longitudinally between the first and second waist regions; and a fastening member extending laterally outward from the second waist region and adapted to releasably connect with a landing zone located in the first waist region. The absorbent product exhibits an In-Bag Stack Height of less about 80 mm as measured according to an In-Bag Stack Height Test.

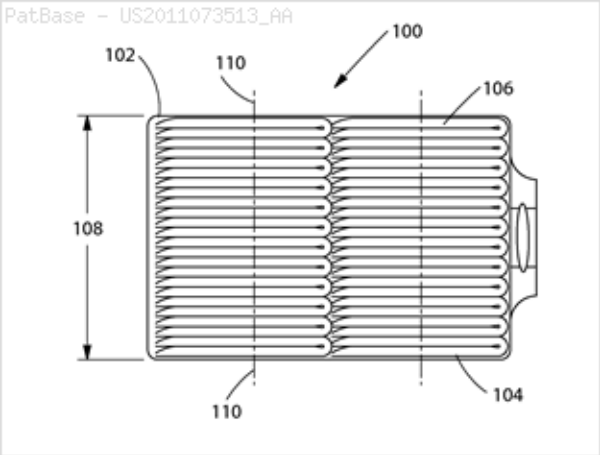


**Classifications:**
**International (IPC 8-9):** A61F13/15 A61F13/47 A61F13/49 A61F13/514 A61F13/53 A61F13/532 A61F13/537 A61F13/551 A61F13/84 A61F15/00 B65D77/00 B65D81/26 B65D85/16 (Advanced/Invention);
A61F13/15 (Core/Invention)
**International (IPC 1-7):** A61F13/15
**CPC:** A61F13/5376 A61F13/51458 A61F13/5148 A61F13/15 A61F13/5323 B65D85/16 A61F13/5511 A61F13/15203 A61F13/55105 A61F2013/15357 A61F2013/15365 A61F13/5519 A61F2013/530131 A61F2013/530189 A61F2013/55195 A61F13/53 A61F13/55115
**European:** A61F13/53 A61F13/551A2 A61F13/551A4
**US:** 206/494 604/368 604/370 604/385.02

**Family:**

| Publication number | Publication date | Application number | Application date |
|---|---|---|---|
| AR078478 AA | 20111109 | AR2010P103552 | 20100929 |
| CA2678090 AA | 20091202 | CA20092678090 | 20090929 |
| CA2678090 C | 20110510 | CA20092678090 | 20090929 |
| CA2733472 AA | 20091202 | CA20092733472 | 20090929 |
| CN102573726 A | 20120711 | CN201080043506 | 20100929 |
| CN104434411 A | 20150325 | CN201410682419 | 20100929 |
| CZ20120216 A3 | 20120704 | CZ20120000216 | 20100929 |
| DE112010004364 T5 | 20130328 | DE201011004364T | 20100929 |
| DE112010005444 T5 | 20130411 | DE201011005444T | 20100929 |
| DE202010017722 U1 | 20120726 | DE201020017722U | 20100929 |
| DE202010017723 U1 | 20120726 | DE201020017723U | 20100929 |
| DE202010017780 U1 | 20120913 | DE201020017780U | 20100929 |
| DE202010017781 U1 | 20120913 | DE201020017781U | 20100929 |
| EP2482775 A1 | 20120808 | EP20100763274 | 20100929 |
| EP2570102 A1 | 20130320 | EP20120196833 | 20100929 |
| EP2594238 A2 | 20130522 | EP20130153128 | 20100929 |
| GB201203789 A0 | 20120418 | GB20120003789 | 20100929 |
| GB201203855 A0 | 20120418 | GB20120003855 | 20100929 |
| GB201203856 A0 | 20120418 | GB20120003856 | 20100929 |
| GB201203857 A0 | 20120418 | GB20120003857 | 20100929 |
| GB201215060 A0 | 20121010 | GB20120015060 | 20100929 |

| | | | |
|---|---|---|---|
| GB201217811 A0 | 20121114 | GB20120017811 | 20100929 |
| GB201217813 A0 | 20121114 | GB20120017813 | 20121005 |
| GB201217816 A0 | 20121114 | GB20120017816 | 20121005 |
| GB2485126 A1 | 20120502 | GB20120003789 | 20100929 |
| GB2485126 B2 | 20120905 | GB20120003789 | 20100929 |
| GB2485726 A1 | 20120523 | GB20120003855 | 20100929 |
| GB2485726 B2 | 20121107 | GB20120003855 | 20100929 |
| GB2485727 A1 | 20120523 | GB20120003856 | 20100929 |
| GB2485727 B2 | 20130807 | GB20120003856 | 20100929 |
| GB2485728 A1 | 20120523 | GB20120003857 | 20100929 |
| GB2485728 B2 | 20130424 | GB20120003857 | 20100929 |
| GB2491509 A1 | 20121205 | GB20120015060 | 20100929 |
| GB2491509 B2 | 20130911 | GB20120015060 | 20100929 |
| GB2499481 A1 | 20130821 | GB20120017816 | 20121005 |
| GB2499481 B2 | 20140101 | GB20120017816 | 20121005 |
| GB2501339 A1 | 20131023 | GB20120017811 | 20100929 |
| GB2501339 B2 | 20140416 | GB20120017811 | 20100929 |
| IN01276DN2012 A | 20150515 | IN2012DN01276 | 20120210 |
| JP2013505796 T2 | 20130221 | JP20120531119T | 20100929 |
| JP2014158959 A2 | 20140904 | JP20140094772 | 20140501 |
| JP5542943 B2 | 20140709 | JP20120531119T | 20100929 |
| JP5823566 B2 | 20151125 | JP20140094772 | 20140501 |
| MX2012003676 A1 | 20120430 | MX20120003676 | 20100929 |
| PL400819 A1 | 20130121 | PL20100400819 | 20100929 |
| PL400840 A1 | 20130304 | PL20100400840 | 20100929 |
| PL400841 A1 | 20130304 | PL20100400841 | 20100929 |
| RU2496460 C1 | 20131027 | RU20120105133 | 20100929 |
| US2011073513 AA | 20110331 | US20100893342 | 20100929 |
| US2014052088 AA | 20140220 | US20130063446 | 20131025 |
| US2016067119 AA | 20160310 | US20150865502 | 20150925 |
| US8585666 BB | 20131119 | US20100893342 | 20100929 |
| US9173785 BB | 20151103 | US20130063446 | 20131025 |
| WO11041352 A1 | 20110407 | WO2010US50635 | 20100929 |

**Priority:**

| | | | | | |
|---|---|---|---|---|---|
| CA20092678090 | 20090929 | CA20092733472 | 20090929 | WO2010US50635 | 20100929 |
| EP20100763274 | 20100929 | DE201011004364T | 20100929 | US20100893342 | 20100929 |
| US20130063446 | 20131025 | CA20112678090 | 20110328 | GB20120015060 | 20100929 |
| JP20120531119 | 20100929 | CN201080043506 | 20100929 | JP20120531119T | 20100929 |
| US20150865502 | 20150925 | | | | |

**Probable Assignee:** PROCTER AND GAMBLE

**Assignee(s):** (std)**:** BERUDA HOLGER ; BLESSING HORST ; DU VAL DEAN LARRY ; DUVAL DEAN LARRY ; KRAUSE AXEL ; WEISMAN PAUL THOMAS ; HUNDORF HARALD HERMANN ; SCHMIDT MATTIAS ; STELZIG LUTZ ; DZIEZOK PETER ; PROCTER AND GAMBLE

**Assignee(s):** PROCTER AND GAMBLE CO ; PROCTOR AND GAMBLE CO ; DZE PROKTER EHND GEHMBL KOMPANI

**Inventor(s):** (std)**:** AXEL KRAUSE ; BERUDA HOLGER ; BLESSING HORST ; DSIEZOK PETER ; DU VAL DEAN LARRY ; DUVAL DEAN L ; DUVAL DEAN LARRY ; DZIEZOK PETER ; HERMANN HUNDORF HARALD ; HOLGER BERUDA ; HORST BLESSING ; HUNDORF HARALD HERMANN ; KRAUSE AXEL ; LARRY DUVAL DEAN ; LUTZ STELZIG ; MATTIAS SCHMIDT ; PAUL THOMAS WEISMAN ; PETER DZIEZOK ; SCHMIDT MATTIAS ; STELZIG LUTZ ; THOMAS WEISMAN PAUL ; WEISMAN PAUL ; WEISMAN PAUL THOMAS ; WEISMAN PAULTHOMAS

**Inventor(s):** PETER DSIEZOK ; HARALD HERMANN HUNDORF ; DEAN LARRY DUVAL

**Agent(s):** HEENAN BLAIKIE LLP; DIMOCK STRATTON LLP; HEIDE UTE; KREMER VERONIQUE MARIE JOSEPHINE; NAGAI HIROSHI; JOHN P; RICHARD L; RICHARD; PROCTER AND GAMBLE CO

**Designated states:** AE AG AL AM AO AT AU AZ BA BB BE BF BG BH BJ BR BW BY BZ CA CF CG CH CI CL CM CN CO CR CU CY CZ DE DK DM DO DZ EC EE EG ES FI FR GA GB GD GE GH GM GN GQ GR GT GW HN HR HU ID IE IL IN IS IT JP KE KG KM KN KP KR KZ LA LC LI LK LR LS LT LU LV LY MA MC MD ME MG MK ML MN MR MT MW MX MY MZ NA NE NG NI NL NO NZ OM PE PG PH PL PT RO RS RU SC SD SE SG SI SK SL SM SN ST SV SY SZ TD TG TH TJ TM TN TR TT TZ UA UG US UZ VC VN ZA ZM ZW

**43) Family number: 53989922** (WO13081515A1) © PatBase

**Title:** **ABSORBENT** **ARTICLE** HAVING FLUID FLOW CONTROL MEMBER

**Abstract:**
An **absorbent** **article**, the **absorbent** **article** being a personal hygiene article, comprising a liquid permeable top sheet, a liquid impermeable back sheet, and an **absorbent** **core** enclosed between the top sheet and the back sheet, and a fluid flow control member arranged between the top sheet and the backsheet, said fluid flow control member being of a nonwoven material comprising a three dimensional network of fibres, said fibres having a thickness of 200-700 micrometres, said nonwoven material having a strain of max 50 percent at 5 k Pa.

**Classifications:**
**International (IPC 8-9):** A61F13/49 A61F13/511 A61F13/537 B32B27/02 B32B5/02 B32B5/12 D04H3/00 (Advanced/Invention)
**CPC:** A61F13/537 B32B5/022 B32B5/12 B32B2555/00 B32B2555/02 A61F13/53713

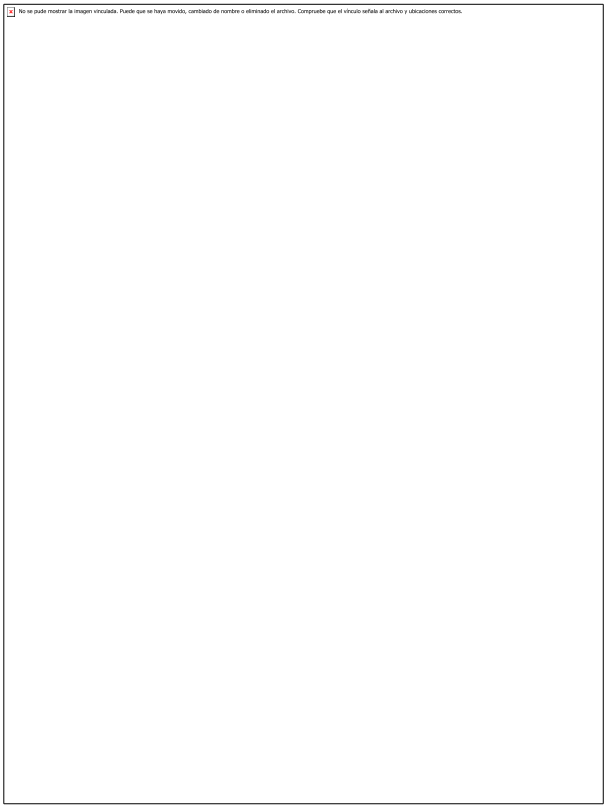


**Family:**

| Publication number | Publication date | Application number | Application date |
|---|---|---|---|
| AU2011382526 AA | 20130606 | AU20110382526 | 20111201 |
| AU2011382526 BB | 20150423 | AU20110382526 | 20111201 |
| CA2856052 AA | 20140515 | CA20112856052 | 20111201 |
| CN103957860 A | 20140730 | CN201180075200 | 20111201 |
| CO7000765 A2 | 20140721 | CO20140141070 | 20140701 |
| EP2785302 A1 | 20141008 | EP20110876788 | 20111201 |
| EP2785302 A4 | 20150722 | EP20110876788 | 20111201 |
| JP2015500055 T2 | 20150105 | JP20140544703T | 20111201 |
| MX2014006505 A1 | 20140710 | MX20140006505 | 20111201 |
| RU2576510 C1 | 20160310 | RU20140126579 | 20111201 |
| WO13081515 A1 | 20130606 | WO2011SE51462 | 20111201 |

**Priority:**

WO2011SE51462 20111201 CO20140141070 20140701

**Probable Assignee:** SCA HYGIENE PROD AB

**Assignee(s):** (std): ANDERSSON PATRIK ; EHLERS KERSTIN K ; HANSON CHARLOTTA ; KITZER PETER P ; LALIBERTE THOMAS R ; VARTIAINEN KENT ; WOOD LEIGH E ; PRIOLEAU LORI ANN S ; WIEZELL BRITT MARIE ; PERSSON CHARLOTTE ; SCA HYGIENE PROD AB

**Assignee(s):** SCA HYGIENE PRODUCTS ABS-405 03GOTEBORGSE ; SCA HYGIENE PRODUCTS AB

**Inventor(s):** (std)**:** ANDERSSON PATRIK ; HANSON CHARLOTTA ; EHLERS KERSTIN K ; KITZER PETER P ; LALIBERTE THOMAS R ; PERSSON CHARLOTTE ; PRIOLEAU LORI ANN S ; VARTIAINEN KENT ; WIEZELL BRITT MARIE ; WOOD LEIGH E

**Inventor(s):** WOOD LEIGH EUS ; WIEZELL BRITT MARIESE ; VARTIAINEN KENTSE ; PRIOLEAU LORI ANN SUS ; THOMAS R LALIBERTE ; PERSSON CHARLOTTESE ; PETER P KITZER ; LALIBERTE THOMAS RUS ; LEIGH E WOOD ; LORI ANN S PRIOLEAU ; PATRIK ANDERSSON ; KITZER PETER PNL ; EHLERS KERSTIN KDE ; HANSON CHARLOTTASE ; KENT VARTIAINEN ; KERSTIN K EHLERS ; ANDERSSON PATRIKSE ; BRITT MARIE WIEZELL ; CHARLOTTA HANSON ; CHARLOTTE PERSSON

**Agent(s):** WATERMARK PATENT AND TRADE MARKS ATTORNEYS; RIDOUT AND MAYBEE LLP; LUZ CLEMENCIA DE PAEZ; BOERLIN MARIA; ALBIHNSZACCO AB ET AL

**Designated states:** AE AG AL AM AO AT AU AZ BA BB BE BF BG BH BJ BR BW BY BZ CA CF CG CH CI CL CM CN CO CR CU CY CZ DE DK DM DO DZ EC EE EG ES FI FR GA GB GD GE GH GM GN GQ GR GT GW HN HR HU ID IE IL IN IS IT JP KE KG KM KN KP KR KZ LA LC LI LK LR LS LT LU LV LY MA MC MD ME MG MK ML MN MR MT MW MX MY MZ NA NE NG NI NL NO NZ OM PE PG PH PL PT QA RO RS RU RW SC SD SE SG SI SK SL SM SN ST SV SY SZ TD TG TH TJ TM TN TR TT TZ UA UG US UZ VC VN ZA ZM ZW

**44) Family number: 55473153** (US2014005622A) © PatBase

**Title:** **ABSORBENT** **ARTICLES** WITH IMPROVED CORE

**Abstract:**
Source: US2014005622A An **absorbent** **article** including a wearer-facing topsheet, a backsheet and an **absorbent** **core** disposed between the topsheet and the backsheet, characterized in that the **absorbent** **core** includes: a first absorbent layer comprising a first substrate, a layer of first **superabsorbent** polymer particles deposited on the first substrate, and a fibrous layer of thermoplastic adhesive material covering the layer of first **superabsorbent** polymer particles; a second absorbent layer, the second absorbent layer comprising a second substrate and a mixed layer deposited on the second substrate, the mixed layer comprising a mixture of second **superabsorbent** particles and cellulosic fibers, the first absorbent layer and the second absorbent layer being combined together such that at least a portion of the fibrous layer of thermoplastic adhesive material of the first absorbent layer contacts at least a portion of the mixed layer of the second absorbent layer, and wherein the first absorbent layer is placed closer to the topsheet than the second layer.

**Classifications:**
**International (IPC 8-9):** A61F13/15 A61F13/49 A61F13/53 A61F13/532 A61F13/534 A61F13/539 (Advanced/Invention)
**CPC:** A61F13/539 A61F13/537 A61F13/53708 A61F13/53747 A61F13/5376 A61F2013/53721 A61F2013/53734 A61F13/532 A61F13/534
**US:** 604/366

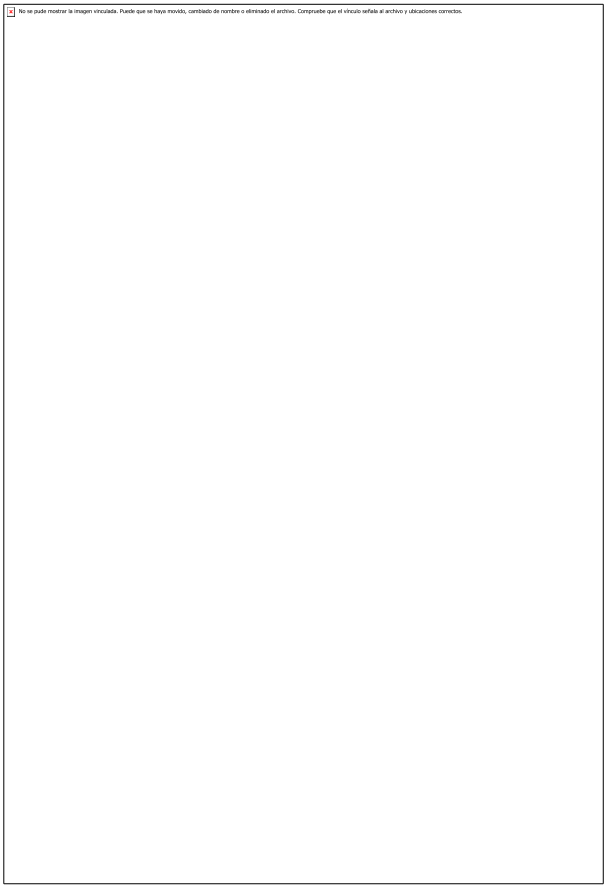


**Family:**

| Publication number | Publication date | Application number | Application date |
|---|---|---|---|
| EP2679209 A1 | 20140101 | EP20120174117 | 20120628 |
| EP2679209 B1 | 20150304 | EP20120174117 | 20120628 |
| JP2015519185 T2 | 20150709 | JP20150517491T | 20130621 |
| US2014005622 AA | 20140102 | US20130929877 | 20130628 |
| WO14004283 A1 | 20140103 | WO2013US47003 | 20130621 |

**Priority:**

EP20120174117 20120628 WO2013US47003 20130621

**Probable Assignee:** PROCTER AND GAMBLE CO

**Assignee(s):** (std)**:** PROCTER AND GAMBLE

**Assignee(s):** PROCTER AND GAMBLE CO

**Inventor(s):** (std)**:** BERUDA HOLGER ; BIANCHI ERNESTO G ; BIANCHI ERNESTO GABRIEL ; CHATTERJEE ANIRUDDHA ; KLUGT WALTER PIETER HENDIRK LAURENTIUS VAN D ; KLUGT WALTER PIETER HENDRIK LAURENTIUS VAN D ; KREUZER CARSTEN HEINRICH ; ROSATI RODRIGO ; WIRTZ BIRGIT

**Agent(s):** LHUILLIER FLORENT CHARLES; NAGAI HIROSHI; GUFFEY TIMOTHY B

**Designated states:** AE AG AL AM AO AT AU AZ BA BB BE BF BG BH BJ BN BR BW BY BZ CA CF CG CH CI CL CM CN CO CR CU CY CZ DE DK DM DO DZ EC EE EG ES FI FR GA GB GD GE GH GM GN GQ GR GT GW HN HR HU ID IE IL IN IS IT JP KE KG KM KN KP KR KZ LA LC LI LK LR LS LT LU LV LY MA MC MD ME MG MK ML MN MR MT MW MX MY MZ NA NE NG NI NL NO NZ OM PA PE PG PH PL PT QA RO RS RU RW SC SD SE SG SI SK SL SM SN ST SV SY SZ TD TG TH TJ TM TN TR TT TZ UA UG US UZ VC VN ZA ZM ZW

**45) Family number: 55473152** (US2014005623A) © PatBase

**Title:** **ABSORBENT** **ARTICLES** WITH IMPROVED CORE

**Abstract:**
Source: US2014005623A An **absorbent** **article** comprising a wearer-facing topsheet, a backsheet and an **absorbent** **core** disposed between the topsheet and the backsheet, characterized in that the **absorbent** **core** comprises: a first absorbent layer comprising a first substrate, a layer of first **superabsorbent** polymer particles deposited on the first substrate, and a fibrous layer of thermoplastic adhesive material covering the layer of first **superabsorbent** polymer particles; a second absorbent layer, the second absorbent layer comprising a second substrate and a mixed layer deposited on the second substrate, the mixed layer comprising a mixture of second **superabsorbent** particles and cellulosic fibers, the first absorbent layer and the second absorbent layer being combined together such that at least a portion of the fibrous layer of thermoplastic adhesive material of the first absorbent layer contacts at least a portion of the mixed layer of the second absorbent layer, and wherein the first absorbent layer is placed closer to the topsheet than the second layer.

**Classifications:**
**International (IPC 8-9):** A61F13/534 A61F13/539 (Advanced/Invention)
**CPC:** A61F13/539 A61F13/534 A61F13/5323 A61F13/535
**US:** 604/366

No se pude mostrar la imagen vinculada. Puede que se haya movido, cambiado de nombre o eliminado el archivo. Compruebe que el vínculo señale al archivo y ubicaciones correctos.

**Family:**

| Publication number | Publication date | Application number | Application date |
|---|---|---|---|
| EP2679210 A1 | 20140101 | EP20120174130 | 20120628 |
| EP2679210 B1 | 20150128 | EP20120174130 | 20120628 |
| US2014005623 AA | 20140102 | US20130929922 | 20130628 |
| WO14004440 A1 | 20140103 | WO2013US47510 | 20130625 |

**Priority:**
EP20120174130 20120628

**Probable Assignee:** PROCTER AND GAMBLE CO

**Assignee(s):** (std)**:** PROCTER AND GAMBLE

**Assignee(s):** PROCTER AND GAMBLE CO

**Inventor(s):** (std)**:** BERUDA HOLGER ; BIANCHI ERNESTO G ; BIANCHI ERNESTO GABRIEL ; CHATTERJEE ANIRUDDHA ; KLUGT WALTER PIETER HENDRIK LAURENTIUS VAN D ; KREUZER CARSTEN HEINRICH ; ROSATI RODRIGO ; WIRTZ BIRGIT

**Agent(s):** LHUILLIER FLORENT CHARLES; GUFFEY TIMOTHY B

**Designated states:** AE AG AL AM AO AT AU AZ BA BB BE BF BG BH BJ BN BR BW BY BZ CA CF CG

CH CI CL CM CN CO CR CU CY CZ DE DK DM DO DZ EC EE EG ES FI FR GA GB GD GE GH GM GN GQ GR GT GW HN HR HU ID IE IL IN IS IT JP KE KG KM KN KP KR KZ LA LC LI LK LR LS LT LU LV LY MA MC MD ME MG MK ML MN MR MT MW MX MY MZ NA NE NG NI NL NO NZ OM PA PE PG PH PL PT QA RO RS RU RW SC SD SE SG SI SK SL SM SN ST SV SY SZ TD TG TH TJ TM TN TR TT TZ UA UG US UZ VC VN ZA ZM ZW

**46) Family number: 56646632** (US2014163504A) © PatBase

**Title:** **ABSORBENT** **ARTICLE** WITH PROFILED ACQUISITION-DISTRIBUTION SYSTEM

**Abstract:**
Source: US2014163504A An **absorbent** **article** (20) having an **absorbent** **core** comprising at least about 80 percent of **superabsorbent** polymers (SAP) by weight of its absorbent material. An acquisition-distribution system (ADS) (50) is at least partially disposed between the **absorbent** **core** and the topsheet. The ADS extends in the longitudinal direction of the **absorbent** **article** at least from a point A1 disposed at a distance D from the front edge to a point A2 disposed at a distance D from the back edge of the article, D being equal to 32 percent of the length L of the article. The ADS has a basis weight which may be at least 20 percent lower at the point A2 than at the point A1.

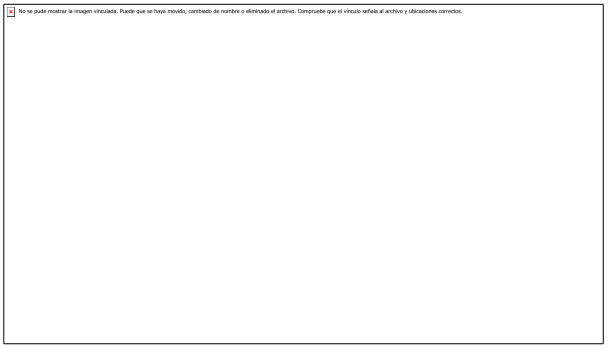


**Classifications:**
**International (IPC 8-9):** A61F13/15 A61F13/49 A61F13/537 A61F13/538 A61F13/539 (Advanced/Invention)
**CPC:** A61F13/15642 A61F13/1565 A61F2013/530547 A61F13/538 A61F13/539 A61F13/53717
**US:** 493/374 604/366 604/374 604/385.01 604/385.101

**Family:**

| Publication number | Publication date | Application number | Application date |
|---|---|---|---|
| CA2894680 AA | 20150610 | CA20132894680 | 20131210 |
| CL2015001582 A1 | 20151002 | CL20150001582 | 20150609 |
| CN104853707 A | 20150819 | CN201380063046 | 20131210 |
| EP2740454 A1 | 20140611 | EP20130191443 | 20131104 |
| IN04986DN2015 A | 20151218 | IN2015DN04986 | 20150609 |
| JP2016502871 T2 | 20160201 | JP20150545925T | 20131210 |
| US2014163504 AA | 20140612 | US20130100083 | 20131209 |
| WO14093323 A1 | 20140619 | WO2013US74088 | 20131210 |

**Priority:**
EP20120196348 20121210 EP20130191443 20131104 WO2013US74088 20131210

**Probable Assignee:** PROCTER AND GAMBLE CO

**Assignee(s):** (std)**:** PROCTER AND GAMBLE

**Assignee(s):** PROCTER AND GAMBLE CO ; SCHNEIDER MANUELA INES ; BAQUER MOLAS GEMMA ; BIANCHI ERNESTO GABRIEL ; LE NGUYEN HUYNH TRANG

**Inventor(s):** (std)**:** BAQUER MOLAS GEMMA ; BIANCHI ERNESTO GABRIEL ; LE NGUYEN HUYNH TRANG ; SCHNEIDER MANUELA INES

**Inventor(s):** BAQUER MOLAS ; SCHNEIDER MANUELA ; BIANCHI ERNESTO

**Agent(s):** DIMOCK STRATTON LLP; LLOVET AHUMADA RAUL; LHUILLIER FLORENT CHARLES; NAGAI HIROSHI; GUFFEY TIMOTHY B

**Designated states:** AE AG AL AM AO AT AU AZ BA BB BE BF BG BH BJ BN BR BW BY BZ CA CF CG CH CI CL CM CN CO CR CU CY CZ DE DK DM DO DZ EC EE EG ES FI FR GA GB GD GE GH GM GN GQ GR GT GW HN HR HU ID IE IL IN IR IS IT JP KE KG KM KN KP KR KZ LA LC LI LK LR LS LT LU LV LY MA MC MD ME MG MK ML MN MR MT MW MX MY MZ NA NE NG NI NL NO NZ OM PA PE PG PH PL PT QA RO RS RU RW SA SC SD SE SG SI SK SL SM SN ST SV SY SZ TD TG TH TJ TM TN TR TT TZ UA UG US UZ VC VN ZA ZM ZW

**47) Family number: 57467910** (US2016051420A) © PatBase

**Title:** **ABSORBENT ARTICLES** WITH PULPLESS RIFFLED CORE

**Abstract:**
Source: US2016051420A Disposable **absorbent articles** comprising **absorbent cores** are presented. In one embodiment, an **absorbent core** may comprise a riffled substrate comprising a plurality of peaks and a plurality of troughs, a flat substrate coupled to the riffled substrate, and **superabsorbent** polymer disposed between the riffled substrate and the flat substrate, wherein the footprint of the riffled substrate is substantially the same as the footprint of the flat substrate, and wherein the surface area of the riffled substrate is greater than the surface area of the flat substrate.

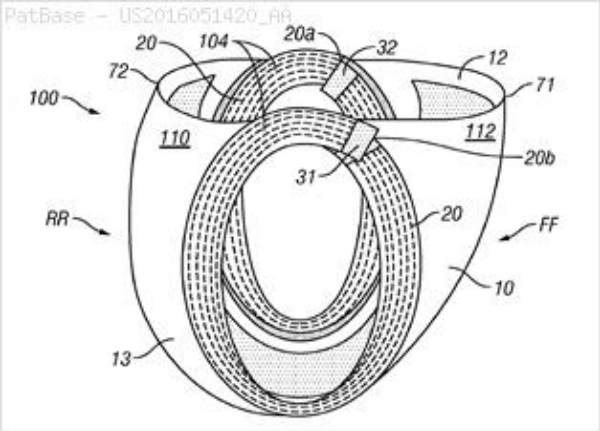


**Classifications:**
**International (IPC 8-9):** A61F A61F13/15 A61F13/49 A61F13/532 A61F13/534 A61F13/537 A61F13/56 (Advanced/Invention); A61F (Subclass/Invention)
**CPC:** A61F13/5638 A61F13/5622 A61F13/537 A61F13/49015 A61F13/49019 A61F13/5323 A61F13/53436 A61F2013/53051

**Family:**

| Publication number | Publication date | Application number | Application date |
|---|---|---|---|
| AU2014233680 AA | 20140925 | AU20140233680 | 20140313 |
| CN105228568 A | 20160106 | CN201480027551 | 20140313 |
| IL241464 A0 | 20151130 | IL20150241464 | 20150910 |
| IL241464 A0 | 20151130 | IL20140241464 | 20140313 |
| IL241464 A0 | 20151130 | IL20150241464 | 20150910 |
| US2016051420 AA | 20160225 | US20140418033 | 20140313 |
| WO14151639 A1 | 20140925 | WO2014US26148 | 20140313 |
| WO14151639 A4 | 20141113 | WO2014US26148 | 20140313 |

**Priority:**
US20130791609P 20130315 WO2014US26148 20140313 US20140418033 20140313

**Probable Assignee:** ASSOCIATED HYGIENIC PRODUCTS LLC

**Assignee(s):** (std)**:** ASSOCIATED HYGIENIC PRODUCTS LLC ; DSG TECHNOLOGY HOLDINGS LTD

**Inventor(s):** (std)**:** SCHROER CHARLES F ; SCHROER JR CHARLES F

**Agent(s):** PIZZEYS PATENT AND TRADE MARK ATTORNEYS; PIZZEYS PATENT AND TRADE MARK ATTORNEYS PTY LTD; LIDDELL ANDREW W; AMATONG JR ALBERTO Q

**Designated states:** AE AG AL AM AO AT AU AZ BA BB BE BF BG BH BJ BN BR BW BY BZ CA CF CG CH CI CL CM CN CO CR CU CY CZ DE DK DM DO DZ EC EE EG ES FI FR GA GB GD GE GH GM GN GQ GR GT GW HN HR HU ID IE IL IN IR IS IT JP KE KG KM KN KP KR KZ LA LC LK LR LS LT LU LV LY MA MC MD ME MG MK ML MN MR MT MW MX MY MZ NA NE NG NI NL NO NZ OM PA PE PG PH PL PT QA RO RS RU RW SA SC SD SE SG SI SK SL SM SN ST SV SY SZ TD TG TH TJ TM TN TR TT TZ UA UG US UZ VC VN ZA ZM ZW

**48) Family number: 58064261** (US2014371701A) © PatBase

**Title:** **ABSORBENT** **ARTICLE** AND **ABSORBENT** **CORE** FORMING CHANNELS WHEN WET

**Abstract:**
Source: US2014371701A An **absorbent** **article** for personal hygiene comprising a liquid permeable topsheet, a liquid impermeable backsheet, an **absorbent** **core** and a fibrous layer. The **absorbent** **core** comprises a core wrap and an absorbent material with **superabsorbent** polymers. The core wrap comprises a top side and a bottom side bonded to one other through one or more areas substantially free of absorbent material. The fibrous layer is at least partially bonded to one of the sides of the core wrap in the area substantially free of absorbent material. When the absorbent material swells, the core wrap forms one or more channels along the area substantially free of absorbent material. The formation of the channel in the **absorbent** **core** causes the formation of one or more corresponding ditches in the fibrous layer.

**Classifications:**
**International (IPC 8-9):** A61F13/532 A61F13/537 (Advanced/Invention)
**CPC:** A61F13/53743 A61F13/53747 A61F13/5323 A61F2013/53778
**US:** 604/378

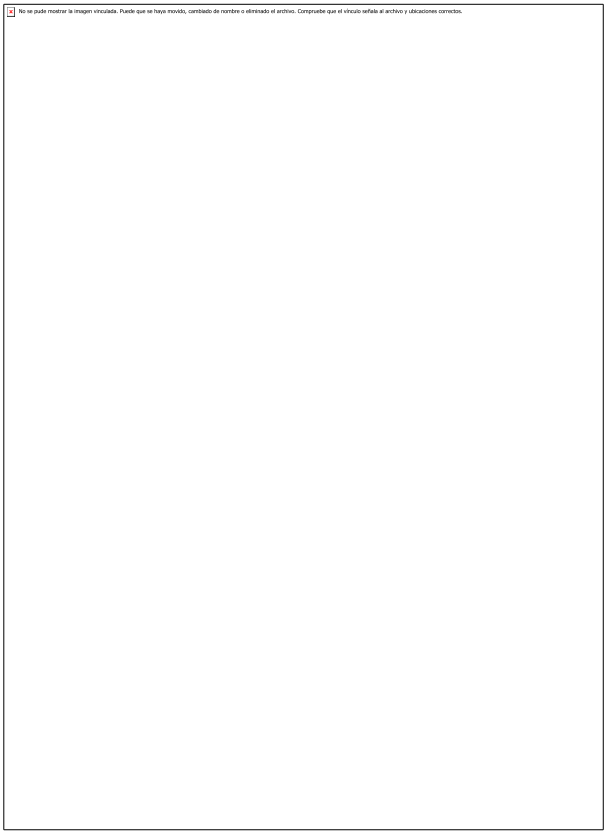


**Family:**

| Publication number | Publication date | Application number | Application date |
|---|---|---|---|
| CA2915216 AA | 20151211 | CA20142915216 | 20140605 |
| CN105263455 A | 20160120 | CN201480031918 | 20140605 |
| EP2813201 A1 | 20141217 | EP20140167432 | 20140507 |
| KR20160007618 A | 20160120 | KR20157035151 | 20140605 |
| US2014371701 AA | 20141218 | US20140296483 | 20140605 |
| WO14200794 A1 | 20141218 | WO2014US41059 | 20140605 |

**Priority:**

EP20130172113 20130614 EP20140167432 20140507 WO2014US41059 20140605

**Probable Assignee:** PROCTER AND GAMBLE CO

**Assignee(s):** (std): PROCTER AND GAMBLE

**Assignee(s):** PROCTER AND GAMBLE CO ; RINNERT THORSTEN ; BIANCHI ERNESTO GABRIEL ; EHRNSPERGER BRUNO JOHANNES ; HOLLENBERG DORIS

**Inventor(s):** (std): BIANCHI ERNESTO GABRIEL ; EHRNSPERGER BRUNO JOHANNES ; HOLLENBERG DORIS ; RINNERT THORSTEN

**Agent(s):** DIMOCK STRATTON LLP; LHUILLIER FLORENT CHARLES; GUFFEY TIMOTHY B

**Designated states:** AE AG AL AM AO AT AU AZ BA BB BE BF BG BH BJ BN BR BW BY BZ CA CF CG CH CI CL CM CN CO CR CU CY CZ DE DK DM DO DZ EC EE EG ES FI FR GA GB

GD GE GH GM GN GQ GR GT GW HN HR HU ID IE IL IN IR IS IT JP KE KG KM KN KP KR KZ LA LC LI LK LR LS LT LU LV LY MA MC MD ME MG MK ML MN MR MT MW MX MY MZ NA NE NG NI NL NO NZ OM PA PE PG PH PL PT QA RO RS RU RW SA SC SD SE SG SI SK SL SM SN ST SV SY SZ TD TG TH TJ TM TN TR TT TZ UA UG US UZ VC VN ZA ZM ZW

**49) Family number: 60278191** (US2015250660A) © PatBase

**Title:** MULTI-COMPONENT TOPSHEETS

**Abstract:**
Source: US2015250660A A multi-component topsheet for an **absorbent** **article** includes a first discrete substrate, a second discrete substrate, and a third discrete substrate, wherein the second discrete substrate is disposed at least partially intermediate the first discrete substrate and the third discrete substrate, wherein the second discrete substrate is joined to the first discrete substrate and the third discrete substrate, wherein the topsheet has a single layer of substrate in about 80 percent or more of the total area of the topsheet and a dual layer of substrate in about 20 percent or less of the total area of the topsheet.

No se pude mostrar la imagen vinculada. Puede que se haya movido, cambiado de nombre o eliminado el archivo. Compruebe que el vínculo señale al archivo y ubicaciones correctas.

**Classifications:**
**International (IPC 8-9):** A61F13/511 A61F13/512 A61F13/513 (Advanced/Invention)
**CPC:** A61F13/5121 A61F13/51104 A61F13/5123 A61F2013/51178 A61F2013/51366 A61F13/5116 A61F13/51305 A61F13/512 A61F2013/51333

**Family:**

| Publication number | Publication date | Application number | Application date |
|---|---|---|---|
| US2015250660 AA | 20150910 | US20150634945 | 20150302 |
| US2015250661 AA | 20150910 | US20150634985 | 20150302 |
| US2015250662 AA | 20150910 | US20150634928 | 20150302 |
| WO15134359 A1 | 20150911 | WO2015US18247 | 20150302 |
| WO15134371 A1 | 20150911 | WO2015US18277 | 20150302 |
| WO15134375 A1 | 20150911 | WO2015US18284 | 20150302 |

**Priority:**

US20140948858P 20140306 US20140948692P 20140306 US20150634945 20150302
US20150112337P 20150205 US20150634985 20150302 US20140948872P 20140306
US20150634928 20150302

**Probable Assignee:** PROCTER AND GAMBLE

**Assignee(s):** (std)**:** PROCTER AND GAMBLE

**Assignee(s):** PROCTER AND GAMBLE CO

**Inventor(s):** (std)**:** DOBRIN GEORGE CHRISTOPHER ; ENDRES JOEERG ; ENDRES JOERG ; ERDEM GUELTEKIN ; GALIE THERESA LYNN ; ISELE OLAF ERIK ; ISELE OLAF ERIK ALEXANDER ; PURDON MIKE ; PURDON MIKE P ; ROSATI RODRIGO ; TALLY AMY LYNN ; WEISMAN PAUL THOMAS ; YOUNG SHARON ANN

**Agent(s):** GUFFEY TIMOTHY B; KREBS JAY A ET AL; KREBS JAY A

**Designated states:** AE AG AL AM AO AT AU AZ BA BB BE BF BG BH BJ BN BR BW BY BZ CA CF CG CH CI CL CM CN CO CR CU CY CZ DE DK DM DO DZ EC EE EG ES FI FR GA GB GD GE GH GM GN GQ GR GT GW HN HR HU ID IE IL IN IR IS IT JP KE KG KM KN KP KR KZ LA LC LK LR LS LT LU LV LY MA MC MD ME MG MK ML MN MR MT MW MX MY MZ NA NE NG NI NL NO NZ OM PA PE PG PH PL PT QA RO RS RU RW SA SC SD SE SG SI SK SL SM SN ST SV SY SZ TD TG TH TJ TM TN TR TT TZ UA UG US UZ VC VN ZA ZM ZW

**50) Family number: 60541563** (US2015282997A) © PatBase

**Title:** **ABSORBENT** **ARTICLES** HAVING SUBSTRATES HAVING FLOW CONTROL MATERIALS

**Abstract:**
Source: US2015282997A The present disclosure is directed, in part, to an **absorbent** **article** comprising a liquid permeable topsheet, a liquid impermeable backsheet, and an **absorbent** **core** positioned at least partially intermediate the liquid permeable topsheet and the liquid impermeable backsheet. The liquid permeable topsheet may comprise a flow control material. The flow control material may form an at least mostly enclosed perimeter over at least a portion of the **absorbent** **core**. The flow control material may extend outwardly from the liquid permeable topsheet and/or may penetrate a portion of the liquid permeable topsheet.

No se pude mostrar la imagen vinculada. Puede que se haya movido, cambiado de nombre o eliminado el archivo. Compruebe que el vínculo señale al archivo y ubicaciones correctos.

**Classifications:**
**International (IPC 8-9):** A61F13/511 A61F13/512 A61F13/513 A61F13/535 A61F13/551 (Advanced/Invention)
**CPC:** A61F13/513 A61F13/5116 A61F2013/51355 A61F13/551 A61F13/535 A61F13/512 A61F13/5126 A61F13/51305 A61F13/51113 A61F2013/51061

**Family:**

| Publication number | Publication date | Application number | Application date |
|---|---|---|---|
| US2015282997 AA | 20151008 | US20150656820 | 20150313 |
| US2015283001 AA | 20151008 | US20150680394 | 20150407 |
| US2015283003 AA | 20151008 | US20150680426 | 20150407 |
| WO15156955 A1 | 20151015 | WO2015US20500 | 20150313 |
| WO15157248 A1 | 20151015 | WO2015US24666 | 20150407 |
| WO15157254 A1 | 20151015 | WO2015US24673 | 20150407 |

**Priority:**

US20140976674P 20140408 US20150656820 20150313 US20150680394 20150407
US20150132736P 20150313 US20150132770P 20150313 US20150680426 20150407

**Probable Assignee:** PROCTER AND GAMBLE CO

**Assignee(s):** (std)**:** PROCTER AND GAMBLE

**Assignee(s):** PROCTER AND GAMBLE CO

**Inventor(s):** (std)**:** ARIZTI BLANCA ; ARORA KELYN ANNE ; BICKING AMANDA MARGARET ; FEIST BARRY ROBERT ; GRENIER ADRIEN ; KNAPMEYER JAMES T ; MULLANE TIMOTHY IAN ; ORR JILL MARLENE ; RITTER MATTHEW S ; RODIC JENNIFER ; ROE DONALD CARROLL ; ROSATI RODRIGO ; STRUBE JOHN B ; TAPP ANN CECILIA ; WALTHER RACHAEL EDEN

**Agent(s):** KREBS JAY A

**Designated states:** AE AG AL AM AO AT AU AZ BA BB BE BF BG BH BJ BN BR BW BY BZ CA CF CG CH CI CL CM CN CO CR CU CY CZ DE DK DM DO DZ EC EE EG ES FI FR GA GB GD GE GH GM GN GQ GR GT GW HN HR HU ID IE IL IN IR IS IT JP KE KG KM KN KP KR KZ LA LC LK LR LS LT LU LV LY MA MC MD ME MG MK ML MN MR MT MW MX MY MZ NA NE NG NI NL NO NZ OM PA PE PG PH PL PT QA RO RS RU RW SA SC SD SE SG SI SK SL SM SN ST SV SY SZ TD TG TH TJ TM TN TR TT TZ UA UG US UZ VC VN ZA ZM ZW

**51) Family number: 61861345** (US2016074237A) © PatBase

**Title:** PROCESS FOR MAKING AN **ABSORBENT** **ARTICLE** COMPRISING A TOPSHEET/**ACQUISITION** **LAYER** LAMINATE


**Abstract:**
Source: US2016074237A A process of making an **absorbent** **article** comprising the steps of providing a liquid permeable topsheet web extending substantially continuously in a machine direction, the topsheet web having a first and second surface, a liquid impermeable backsheet web extending substantially continuously in the machine direction and an **acquisition** **layer** having a first and second surface. The topsheet web and the **acquisition** **layer** comprise fibers. The process comprises the step of aligning the topsheet web and the **acquisition** **layer** in a face to face relationship such that the second surface of the topsheet web in in contact with the first surface of the **acquisition** **layer**. The process comprises the step of simultaneously mechanically deforming and combining the topsheet web together with the **acquisition** **layer** to provide a topsheet/**acquisition** **layer** laminate web having three-dimensional protrusions.


No se pude mostrar la imagen vinculada. Puede que se haya movido, cambiado de nombre o eliminado el archivo. Compruebe que el vínculo señala al archivo y ubicaciones correctos.

**Classifications:**
**International (IPC 8-9):** A61F13/15 A61F13/45 A61F13/51 A61F13/511 A61F13/512 A61F13/513 A61F13/53 A61F13/534 A61F13/535 A61F13/536 A61F13/537 A61F13/551 A61F13/62 B29C65/00 B32B38/04 B32B38/06 B32B5/26 D04H1/00 D04H1/44 D04H1/45 D04H1/492 D04H1/54 D04H1/70 D04H11/08 D04H13/00 (Advanced/Invention); A61F13/84 (Advanced/Non-invention)
**CPC:** A61F13/15699 A61F13/45 A61F13/15707 A61F13/15723 A61F13/51 A61F13/513 A61F13/51394 A61F13/53 A61F13/534 A61F13/55105 A61F2013/15715 A61F13/55115 A61F2013/15284 A61F2013/4587 A61F2013/5307 A61F2013/51023 A61F2013/53472 A61F2013/51007 A61F2013/51355 A61F2013/51002 A61F2013/15463 A61F13/51121 A61F13/15203 A61F13/551 A61F2013/15365 D04H13/001 A61F2013/51009 D10B2509/02 D10B2403/0111 A61F13/511 A61F2013/51147 A61F13/51108 A61F13/15577 A61F13/535 A61F13/55145 A61F2013/8497 B32B38/04 B32B2038/042 D04H1/44 D04H1/492 D04H1/45 D04H1/54 B29C66/21 B32B38/06 A61F13/537 A61F2013/530175 B32B5/26 D04H1/70 A61F13/5116 A61F13/5121 A61F13/536 A61F2013/421 A61F2013/427 A61F2013/4568 A61F2013/51026 A61F2013/51092 A61F2013/51377 A61F2013/530007 A61F2013/530131 A61F2013/530481 A61F2013/530489 A61F2013/530664 A61F2013/530715 A61F2013/5386 A61F2013/53908 A61F2013/5395 A61F2013/15292 A61F2013/51014 A61F2013/51186 D04H13/00 A61F13/51104 A61F13/512 D04H1/00 D04H11/08 A61F13/627 A61F13/15756 A61F2013/5349 A61F13/15731 A61F13/15804 A61F13/5123 A61F13/5125 A61F2013/51178

**Family:**

| Publication number | Publication date | Application number | Application date |
|---|---|---|---|
| US2016074237 AA | 20160317 | US20150844292 | 20150903 |
| US2016074238 AA | 20160317 | US20150844343 | 20150903 |
| US2016074240 AA | 20160317 | US20150844033 | 20150903 |
| US2016074241 AA | 20160317 | US20150844037 | 20150903 |
| US2016074243 AA | 20160317 | US20150844256 | 20150903 |
| US2016074244 AA | 20160317 | US20150844269 | 20150903 |
| US2016074245 AA | 20160317 | US20150844358 | 20150903 |
| US2016074246 AA | 20160317 | US20150844374 | 20150903 |

| | | | |
|---|---|---|---|
| US2016074247 AA | 20160317 | US20150844385 | 20150903 |
| US2016074248 AA | 20160317 | US20150844402 | 20150903 |
| US2016074249 AA | 20160317 | US20150844411 | 20150903 |
| US2016074250 AA | 20160317 | US20150844018 | 20150903 |
| US2016074251 AA | 20160317 | US20150844603 | 20150903 |
| US2016074252 AA | 20160317 | US20150844459 | 20150903 |
| US2016074253 AA | 20160317 | US20150844482 | 20150903 |
| US2016074254 AA | 20160317 | US20150844526 | 20150903 |
| US2016074255 AA | 20160317 | US20150844582 | 20150903 |
| US2016074256 AA | 20160317 | US20150844613 | 20150903 |
| US2016074257 AA | 20160317 | US20150844026 | 20150903 |
| US2016074258 AA | 20160317 | US20150844043 | 20150903 |
| US2016074259 AA | 20160317 | US20150844047 | 20150903 |
| US2016075122 AA | 20160317 | US20150844543 | 20150903 |
| US2016075123 AA | 20160317 | US20150844591 | 20150903 |
| US2016076180 AA | 20160317 | US20150844457 | 20150903 |
| US2016076181 AA | 20160317 | US20150844507 | 20150903 |
| US2016076182 AA | 20160317 | US20150844523 | 20150903 |
| US2016076184 AA | 20160317 | US20150844499 | 20150903 |
| WO16040090 A1 | 20160317 | WO2015US48302 | 20150903 |
| WO16040091 A1 | 20160317 | WO2015US48303 | 20150903 |
| WO16040092 A1 | 20160317 | WO2015US48304 | 20150903 |
| WO16040093 A1 | 20160317 | WO2015US48305 | 20150903 |
| WO16040094 A1 | 20160317 | WO2015US48306 | 20150903 |
| WO16040096 A1 | 20160317 | WO2015US48308 | 20150903 |
| WO16040097 A1 | 20160317 | WO2015US48310 | 20150903 |
| WO16040099 A1 | 20160317 | WO2015US48312 | 20150903 |
| WO16040100 A1 | 20160317 | WO2015US48313 | 20150903 |
| WO16040101 A1 | 20160317 | WO2015US48319 | 20150903 |
| WO16040103 A1 | 20160317 | WO2015US48321 | 20150903 |
| WO16040104 A1 | 20160317 | WO2015US48323 | 20150903 |
| WO16040105 A1 | 20160317 | WO2015US48325 | 20150903 |
| WO16040107 A1 | 20160317 | WO2015US48339 | 20150903 |
| WO16040109 A1 | 20160317 | WO2015US48342 | 20150903 |
| WO16040111 A1 | 20160317 | WO2015US48346 | 20150903 |
| WO16040112 A1 | 20160317 | WO2015US48347 | 20150903 |
| WO16040114 A1 | 20160317 | WO2015US48351 | 20150903 |
| WO16040115 A1 | 20160317 | WO2015US48352 | 20150903 |
| WO16040117 A1 | 20160317 | WO2015US48355 | 20150903 |
| WO16040118 A1 | 20160317 | WO2015US48358 | 20150903 |
| WO16040119 A1 | 20160317 | WO2015US48361 | 20150903 |
| WO16040120 A1 | 20160317 | WO2015US48363 | 20150903 |
| WO16040121 A1 | 20160317 | WO2015US48367 | 20150903 |
| WO16040122 A1 | 20160317 | WO2015US48368 | 20150903 |
| WO16040123 A1 | 20160317 | WO2015US48369 | 20150903 |
| WO16040124 A1 | 20160317 | WO2015US48373 | 20150903 |

**Priority:**

| | | |
|---|---|---|
| US20140049516P 20140912 | US20140049521P 20140912 | US20140049408P 20140912 |
| US20140049406P 20140912 | US20140049404P 20140912 | US20140049403P 20140912 |
| US20140049401P 20140912 | US20140049397P 20140912 | US20140049392P 20140912 |
| US20140049383P 20140912 | US20140049379P 20140912 | US20140049376P 20140912 |
| US20140049388P 20140912 | US20140049377P 20140912 | US20150844292 20150903 |

| | | | | | |
|---|---|---|---|---|---|
| US20150210057P | 20150826 | US20150210005P | 20150826 | US20150210020P | 20150826 |
| US20150210014P | 20150826 | US20150844343 | 20150903 | US20150844033 | 20150903 |
| US20150844037 | 20150903 | US20150844256 | 20150903 | US20150844269 | 20150903 |
| US20140049378P | 20140912 | US20140049380P | 20140912 | US20140049382P | 20140912 |
| US20140049386P | 20140912 | US20140049387P | 20140912 | US20140049389P | 20140912 |
| US20150844374 | 20150903 | US20150844358 | 20150903 | US20150844385 | 20150903 |
| US20150844402 | 20150903 | US20150844411 | 20150903 | US20150844018 | 20150903 |
| US20150844603 | 20150903 | US20150844459 | 20150903 | US20150844482 | 20150903 |
| US20150844526 | 20150903 | US20150844582 | 20150903 | US20150844026 | 20150903 |
| US20150844613 | 20150903 | US20150844043 | 20150903 | US20150844047 | 20150903 |
| US20150844543 | 20150903 | US20150844591 | 20150903 | US20150844507 | 20150903 |
| US20150844523 | 20150903 | US20150844457 | 20150903 | US20150844499 | 20150903 |

**Probable Assignee:** PROCTER AND GAMBLE CO

**Assignee(s):** (std)**:** PROCTER AND GAMBLE

**Assignee(s):** PROCTER AND GAMBLE CO

**Inventor(s):** (std)**:** BENNER ANDREA ; BENNER ANDREA L ; CHATTERJEE ANIRUDDHA ; FISCHER STEFFEN ; GRENIER ADRIEN ; HAMMONS JOHN LEE ; KNAPMEYER JAMES T ; KNAPMEYER JAMES TERRY ; ORR JILL M ; ORR JILL MARLENE ; RITTER MATTHEW S ; RITTER MATTHEW STEVEN ; ROSATI RODRIGO ; SPRENGARD EICHEL CORNELIA ; STRUBE JOHN B ; STRUBE JOHN BRIAN ; WEISMAN PAUL T ; WEISMAN PAUL THOMAS

**Agent(s):** KREBS JAY A

**Designated states:** AE AG AL AM AO AT AU AZ BA BB BE BF BG BH BJ BN BR BW BY BZ CA CF CG CH CI CL CM CN CO CR CU CY CZ DE DK DM DO DZ EC EE EG ES FI FR GA GB GD GE GH GM GN GQ GR GT GW HN HR HU ID IE IL IN IR IS IT JP KE KG KM KN KP KR KZ LA LC LK LR LS LT LU LV LY MA MC MD ME MG MK ML MN MR MT MW MX MY MZ NA NE NG NI NL NO NZ OM PA PE PG PH PL PT QA RO RS RU RW SA SC SD SE SG SI SK SL SM SN ST SV SY SZ TD TG TH TJ TM TN TR TT TZ UA UG US UZ VC VN ZA ZM ZW