IvÃin Ardila

Search history

Search 1:	[SP]: system and method for laser marking can end, including a can end center panel and/or pull tab. The decorated can end and/or tabs may have a machine readable image. (Results 545)
Search 2:	code (Results 100000)
Search 3:	1 and 2 (Results 118)
Search 4:	tab (Results 100000)
Search 5:	3 and 4 (Results 7)

1) Family number: 31957728 (US2002030362A)

© PatBase

Title: Machine sealable mailing form for non-impact printing

Abstract: Source: US2002030362A A pressure-seal or pressure-activated sealing means for a mailing form constructed of a single ply of substantially opaque or printable substrate material which is configured such that it can be folded to form a financial document, for example, an accounts payable or payroll check and check voucher, and wherein the ply is further folded to form an outgoing mailer envelope in which the financial document is enclosed for mailing to a recipient. The mailing form can also incide a substantially transparent single ply of substrate material for providing a window area for viewing or scanning therethrough.

Classifications:

International (IPC 8-9): B23B9/00 B41L1/22 B42D15/00 B42D15/02 B42D15/08 B42D5/00 B65D27/00 B65D65/28 G06F15/16 G07B17/00 G09F3/10 H04J3/12 H04L12/00 H04L12/14 H04L12/56 H04L12/58 H04L29/06 H04L29/12 H04M15/00 H04M3/00 H04M3/42 H04M3/53 H04M3/56 H04M7/00 H04Q7/00 (Advanced/Invention);
B65D27/00 G07B17/00 H04L12/56 H04L29/12 H04M15/00 H04M3/00 H04M3/42 H04M3/53 H04M3/56 H04M7/00 (Advanced/Non-invention);
B23B9/00 B41L1/00 B42D15/00 B42D15/02 B42D15/08 B42D5/00 B65D27/00 H04L12/14 H04L29/06 (Core/Invention);
H04M15/00 H04M3/42 H04M3/50 H04M3/56 H04M7/00 (Core/Non-invention)

International (IPC 1-7): B32B7/04 B41L1/22 B42D15/00 B42D15/02 B42D15/08 B42D5/00 B65D27/00 B65D27/04 B65D27/06 B65D27/10 B65D33/04 B65D33/34 B65D65/28 G06F9/00 G09F3/04 G09F3/10 H04L12/00 H04L12/14 H04L12/28 H04L12/56 H04L29/06 H04M3/00 H04M7/00 H04Q7/00

CPC: G09F3/0288 Y10S462/90 Y10S283/90 Y10S462/901 B42D15/08 B41L1/22 B42D5/00 B42D15/008 H04L51/18 Y10T428/15 Y10T428/2419 Y10T428/24215 Y10T428/24264 Y10T428/14 Y10T428/1495 B42D15/02 B42D15/006 G07B2017/0062 G09F3/10 B42P2241/22 H04L12/14 H04L12/1403 H04L12/1414 H04L12/1428 H04L12/1464 H04L12/1471 H04L29/06 H04L29/06027 H04L29/12122 H04L29/1216 H04L61/1547 H04L61/157 H04L65/1043 H04L65/1069 H04M3/42 H04M3/42008 H04M3/42221 H04M3/5322 H04M3/56 H04M7/0006 H04M7/0009 H04M7/003 H04M15/00 H04M2215/01

European: B41L1/22 B42D15/00F1 B42D15/00H2 B42D15/02 B42D15/08 B42D5/00 G09F3/02C G09F3/10 H04L12/14 H04L12/14A H04L12/14C1 H04L12/14J H04L12/14P3 H04L12/14P5 H04L29/06 H04L29/06M2N3 H04L29/06M2S1 H04L29/12A H04L29/12A2D H04L29/12A2H H04L61/15D H04L61/15H H04M3/42L H04M3/56 H04M7/00B4 H04M7/00D4 L42P241/22 S07B17/00F2C1 T04L29/06C2 T04L29/12A2 T04M15/00 T04M215/01 T04M3/42 T04M3/42A T04M3/53T T04M3/56 T04M7/00B2 T04M7/00B4

US: 229/300 229/300P 229/301 229/302 229/303 229/304 229/305 229/313 229/314 229/68.1 229/70 229/71 229/80 229/92.1 229/92.100P 229/92.3 229/92.8 229/92.800S 283/101 283/103 283/105 283/106 283/107 283/109 283/110 283/111 283/116 283/116P 283/34 283/35 283/51 283/58 283/61 283/61P 283/62 283/62P 283/67 283/71 283/72 283/72P 283/74 283/79 283/80 283/81 283/900 283/98 283/98P 370/352 370/401 370/522 370/522P 379/88.13 383/106 383/209 383/5 383/84 40/630 40/638 402/79 428/121 428/124 428/130 428/40.1 428/42.3 428/43 455/461 462/17 462/19 462/2 462/25 462/26 462/36 462/45 462/6 462/64 462/66 462/900 462/901 493/216 493/222 709/106 709/206 718/106 718/106P

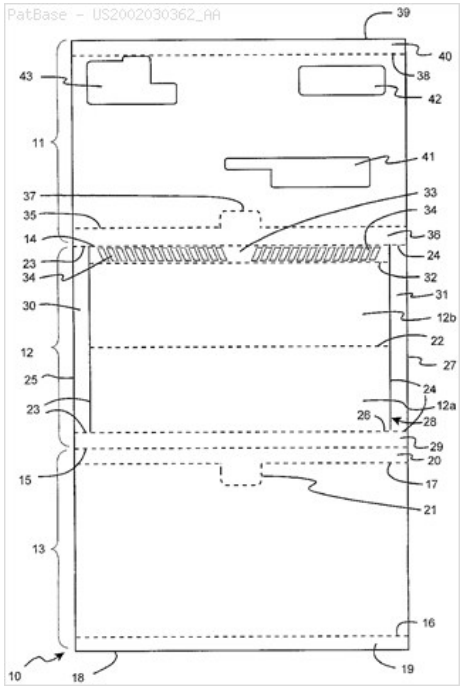

Family:

Publication number	Publication date	Application number	Application date
AR023520 AA	20020904	AR2000P101779	20000417
AT323369 E	20060415	AT20000922284T	20000417
AU199466385 A1	19941108	AU19940066385	19940420
AU200011097 A1	20000501	AU20000011097	19991012
AU200011097 A5	20000501	AU20000011097	19991012
AU200015173 A1	20000515	AU20000015173	19991021
AU200015173 A5	20000515	AU20000015173	19991021
AU200032211 A5	20000825	AU20000032211D	20000202
AU200042447 A5	20001102	AU20000042447D	20000414
AU200042490 A5	20001102	AU20000042490	20000417
AU2001257242 AA	20011107	AU20010257242	20010424
AU200157242 A5	20011107	AU20010057242	20010424
AU2005201431 AA	20050428	AU20050201431	20050405
AU2005201431 BB	20070419	AU20050201431	20050405
AU779110 B2	20050106	AU20000042490	20000417
DE60027283 D1	20060524	DE20006027283	20000417
DE60027283 T2	20070111	DE20006027283T	20000417
EP1169834 A1	20020109	EP20000922284	20000417
EP1169834 B1	20060412	EP20000922284	20000417
EP1675350 A1	20060628	EP20060111221	20000417
EP1675350 B1	20130220	EP20060111221	20000417
HK1043453 A1	20060804	HK20020104998	20020703
JP2002542723 T2	20021210	JP20000613140T	20000417
JP4601831 B2	20101222	JP20000613140T	20000417
TW518849 B	20030121	TW20000107018	20000414
US2002030362 AA	20020314	US20010864753	20010524
US2002149196 AA	20021017	US20000557492	20000424
US2003140084 AA	20030724	US20030377044	20030228
US2003234534 AA	20031225	US20030378163	20030228
US2004066032 AA	20040408	US20030660026	20030911
US2004129767 AA	20040708	US20030418621	20030418
US2004130141 AA	20040708	US20030740071	20031218
US2004195822 AA	20041007	US20040752477	20040106
US2005145682 AA	20050707	US20050058589	20050215
US2005184506 AA	20050825	US20050106087	20050414
US2006098692 AA	20060511	US20050302772	20051213
US2013041960 AA	20130214	US20120555970	20120723
US2014067979 AA	20140306	US20130076522	20131111
US5791553 A	19980811	US19950434416	19950503
US5836622 A	19981117	US19930049946	19930420
US5865717 A	19990202	US19950480161	19950607
US5899504 A	19990504	US19950377126	19950123
US5954431 A	19990921	US19940349062	19941201
US6095919 A	20000801	US19980179224	19981027
US6155476 A	20001205	US19980132036	19980811
US6173888 BA	20010116	US19990243003	19990202
US6209779 BA	20010403	US19990449440	19991124
US6209920 BA	20010403	US19990410242	19990930

US6217079 BA	20010417	US19990293633	19990415
US6257624 BA	20010710	US19980102852	19980623
US6386590 BA	20020514	US19980172593	19981014
US6402022 BA	20020611	US20000549739	20000414
US6481754 BB	20021119	US20010864753	20010524
US6482085 BA	20021119	US20000488067	20000119
US6672624 BB	20040106	US20000557492	20000424
US6717938 BA	20040406	US19990293496	19990415
US6851719 BB	20050208	US20030660026	20030911
US6945565 BB	20050920	US20030378163	20030228
US6962372 BB	20051108	US20040752477	20040106
US6999478 BB	20060214	US20030377044	20030228
US7341279 BB	20080311	US20030418621	20030418
US7357423 BB	20080415	US20030740071	20031218
US8238380 BB	20120807	US20050302772	20051213
US9059955 BB	20150616	US20130076522	20131111
WO0022602 A1	20000420	WO1999US23697	19991012
WO0022602 C2	20000914	WO1999US23697	19991012
WO0024586 A1	20000504	WO1999US24885	19991021
WO0024586 C2	20001102	WO1999US24885	19991021
WO0046041 A1	20000810	WO2000US02727	20000202
WO0063027 A1	20001026	WO2000US10130	20000414
WO0064123 A1	20001026	WO2000US10355	20000417
WO0181097 A2	20011101	WO2001US13288	20010424
WO0181097 A3	20020321	WO2001US13288	20010424
WO9423955 A1	19941027	WO1994US04366	19940420

Priority:

US19930049946	19930420	WO1994US04366	19940420	US19940240869	19940510
US19950240869	19950510	US19940349062	19941201	US19950377126	19950123
US19980087595P	19980601	US19950434416	19950503	US19950480161	19950607
US19990410242	19990928	WO1999US23697	19991012	US19990410242	19990930
US19990361660	19990727	US19990293633	19990415	US19980102852	19980623
US19980172593	19981014	US19980097246	19980612	US19990243003	19990202
US19980179224	19981027	US19980132036	19980811	US19990293496	19990415
AU20050201431	20050405	AU20000042490	20000417	EP20000922284	20000417
WO1999US24885	19991021	WO2001US13288	20010424	US20030418621	20030418
WO2000US10355	20000417	US20050106087	20050414	US20020361379P	20020301
US20030740071	20031218	US20030378163	20030228	US20020255375	20020926
WO2000US02727	20000202	WO2000US10130	20000414	US19990449440	19991124
US20000549739	20000414	US20010864753	20010524	US20000557492	20000424
US20000488067	20000119	US20040752477	20040106	US20050058589	20050215
US20030660026	20030911	US20050302772	20051213	US20030377044	20030228
US20120555970	20120723	US20130076522	20131111		

Probable Assignee: ADVANCED MESSAGING TECHNOLOGIES INC

Assignee(s): (std)**:** ADVANCED MESSAGING TECHNOLOGIES INC ; ANGELO LEO D ; CORTEZ JOSE B ; D ANGELO LEO A ; JFAX COM INC ; FABEL WARREN M ; J2 GLOBAL COMMUNICATIONS INC ; WARREN M FABEL ; LASER SUBSTRATES INC ; J2 GLOBAL INC ; J2 GLOBAL COMM INC

Assignee(s): FABEL ; J2 GLOBAL COMMUNICATIONS INC HOLLYWOOD ; JFAXCOM INC ; LASER SUBSTRATES LTD ; TIMESHIFT INC ; SILICON VALLEY BANK LOAN DOCUMENTATION H ; SILICON VALLEY BANK ; F EL JILL M AB ; FORMS UNLIMITED INC ; FABEL JILL M ; D ANGELO LEO

Inventor(s): (std)**:** D ANGELO LEO ; WARREN M FABEL ; LEO D ANGELO ; FABEL WARREN M ; FABEL WARREN ; CORTEZ JOSE B ; CORTEZ JOSE ; CAMPBELL CHARLES A ; AUCHTER GLEN A ; D ANGELO LEO A

Inventor(s): AUCHTER GLEN ; WARREN FABEL ; CAMPBELL CHARLES

Agent(s): DAVIES COLLISON CAVE; Bartle Robin Jonathan; FLEIT KAIN GIBBONS GUTMAN BONGINI AND BIANCO PL; BLAKELY SOKOLOFF TAYLOR AND ZAFMAN; JON A; WHITLOCK TED W; GIBBONS JON A; TED W; BLAKELY SOKOLOFF TAYLOR AND ZAFMAN LLP

Designated states: AE AG AL AM AT AU AZ BA BB BE BF BG BJ BR BY CA CF CG CH CI CM CN CR CU CY CZ DE DK DM DZ EE ES FI FR GA GB GD GE GH GM GN GR GW HR HU ID IE IL IN IS IT JP KE KG KP KR KZ LC LI LK LR LS LT LU LV MA MC MD MG MK ML MN MR MW MX MZ NE NL NO NZ PL PT RO RU SD SE SG SI SK SL SN SZ TD TG TJ TM TR TT TZ UA UG US UZ VN YU ZA ZW

2) Family number: 28313446 (US2001017817A)

Title: PRODUCT LABELING METHOD AND APPARATUS

Abstract: Source: US2001017817A A method and apparatus for configuring indicating configurations for containers wherein at least a subset of indicating configurations include an enhanced indicating device such as an electronic storage device, the containers to include enhanced devices being a function of whether or not the end user uses an interacting device capable of receiving information from the enhanced devices, the method and system indicating whether or not standard or enhanced containers should be used for specific prescriptions or orders and, in some cases, automatically providing the correct container and specifying (i.e., printing and writing) information to the containers.

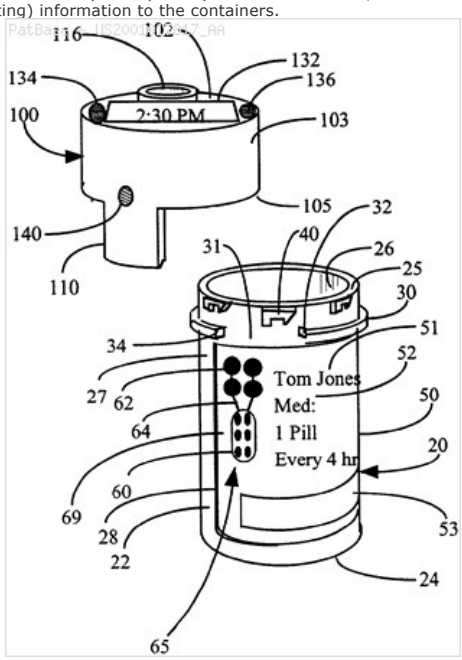

Classifications:

International (IPC 8-9): A61J1/00 A61J1/03 A61J1/14 A61J7/00 A61J7/04 A61M5/14 A61M5/142 A61M5/168 B42D15/00 B65B59/00 B65C3/08 B65D85/00 E04C5/12 G04B37/00 G04B47/00 G04G15/00 G04G21/04 G06F1/00 G06F13/00 G06F15/173 G06F17/00 G06F17/60 G06F19/00 G06F21/00 G06K5/00 G06Q50/00 G07C9/00 G07F11/00 G07F17/00 G08B13/14 G09F3/00 G09F3/04 H04L29/06 (Advanced/Invention); G06F19/00 G06K17/00 (Advanced/Non-invention);
A61J1/00 A61J1/14 A61J7/00 A61M5/142 A61M5/168 B65C3/00 E04C5/12 G04B47/00 G04G1/00 G04G15/00 G06F1/00 G06F17/00 G06F19/00 G06F21/00 G06K5/00 G07C9/00 G07F11/00 G07F17/00 G08B13/14 G09F3/00 G09F3/04 (Core/Invention); G06K17/00 (Core/Non-invention)

International (IPC 1-7): A61J7/04 G04B37/00 G04B47/00 G06F13/00 G06F15/16 G06F17/00 G06F17/30 G06F3/00 G08B13/14 G08B23/00 H04L9/00 H04L9/30 H04L9/32

CPC: G07C9/00182 Y10S707/99945 Y10S707/99948 G04R60/04 A61J2205/70 A61J2205/20 A61J2205/50 A61J2200/70 G06K2017/009 G04G15/006 G09F3/005 A61J2205/60 G04G21/04 G06F19/366 A61J2205/10 A61M5/14212 A61M5/16827 A61M2205/3561 A61M2205/3569 A61M2205/3592 A61M2205/60 A61M2205/6063 A61M2205/6072 G06F19/323 G06F19/3468 G06Q50/22 G06Q50/24 G06F19/322 G06F19/326 G06F19/327 G06F19/3418 H04L63/0492 H04L63/0853 H04L63/105 H04L63/108 A61J2200/30 G06F19/3462 G06F21/35 G06F2221/2111 G07C9/00111 E04C5/12 A61J2205/30 A61J1/03 A61J1/1437 G06K19/07762 A61J7/0046 A61J7/04 A61J7/0481 A61J1/035 A61J7/0084 A61J7/0418 A61J7/0436 A61J7/0445 A61J7/0454

European: A61J1/00C10 A61J1/03B A61J1/14D A61J7/00F1 A61J7/04B3 A61M5/142G A61M5/168A11 E04C5/12 G04G1/00D2 G04G15/00C G04G21/04 G06F1/00N5A2D G06F19/00A G06F19/32C G06F19/32C1 G06F19/32E3 G06F19/32G G06F19/34C G06F19/34L1 G06F19/34L3 G06F19/36C G06F21/35 G06K19/077T3D G06Q50/22 G06Q50/24 G07C9/00B10 G07C9/00E2 G09F3/00B H04L29/06C6C2 H04L63/04B16 H04L63/08E H04L63/10F K61J200/30 K61J205/10 K61J205/30 K61J205/60 K61J7/00F1 K61J7/04B1B K61J7/04B1D2 K61J7/04B1D4 K61J7/04B1G K61M205/35R2 K61M205/35R3 K61M205/35T2 K61M205/60 K61M205/60P K61M205/60P2 S06F19/32C S06F19/32C1 S06F19/34C S06F19/34L1 S06F19/36C S06F221/2111 S06K17/00W34 T04L63/10D

US: 1/1 156/42S 206/459.5 221/129 221/15 221/2 221/2S 221/9 221/9S 222/1 222/1S 235/375 235/375P 235/380 235/382 283/67 283/67S 283/81 340/10.41 340/10.51 340/3.1 340/5.1 340/5.61 340/5.74 340/5.8 340/5.81 340/539.1 340/539.12 340/572.1 340/572.100S 340/572.8 340/572.9 340/573.1 340/573.100P 340/573.4 340/573.400S 340/7.1 340/8.1 340/825.06 340/825.15 340/825.17 340/825.31 340/825.34 340/825.49 340/825.54 364/479.14 368/10 368/10P 380/23 380/25 380/270 380/30 380/4 380/49 380/9 395/186 395/187.01 395/188.01 40/630 40/630P 428/703S 442/149S 442/327P 442/374P 442/375S 442/381S 442/383S 442/384S 442/398S 442/400S 442/401S 604/151 604/151P 604/93.01 604/93.010S 700/234 700/235 700/236 700/236P 700/241 700/242 700/244 705/2 705/2P 705/2S 705/3 705/3S 707/104 707/104.1 707/999.104 707/999.107 709/217 709/217P 709/219 709/220 709/223 709/223P 709/225 709/227 709/229 709/229P 709/250 709/328 710/8 710/8P 713/176 713/176S 713/185 713/185S 713/200 713/201 713/202 719/328 726/2 726/20 726/2S 726/9

Family:

Publication number	Publication date	Application number	Application date
AU200018118 A1	20000522	AU20000018118	19991102
AU200018118 A5	20000522	AU20000018118	19991102
CA2225353 AA	19980620	CA19972225353	19971219
CA2349192 AA	20010503	CA19992349192	19991102
US2001017817 AA	20010830	US20010833258	20010412
US2001028308 AA	20011011	US20010832770	20010411
US2002038392 AA	20020328	US20010004941	20011203
US2002084904 AA	20020704	US20010007970	20011113
US2002116509 AA	20020822	US20020127734	20020422
US2003099158 AA	20030529	US20020253963	20020924
US2004039481 AA	20040226	US20030649805	20030826
US2005091338 AA	20050428	US20040899520	20040726
US2007204497 AA	20070906	US20070800792	20070507
US2009294521 AA	20091203	US20090463257	20090508
US2011196306 AA	20110811	US20110085670	20110413
US2011231204 AA	20110922	US20110151057	20110601
US2011307592 AA	20111215	US20110103740	20110509
US5852590 A	19981222	US19970832613	19970328
US5883576 A	19990316	US19980007290	19980114
US5960085 A	19990928	US19970834634	19970414
US6032155 A	20000229	US19970955475	19971021
US6255951 BA	20010703	US19980200881	19981130
US6259654 BA	20010710	US19980185137	19981103
US6346886 BA	20020212	US20000596715	20000619
US6408330 BA	20020618	US19980170169	19981013
US6529446 BA	20030304	US20000627987	20000728
US6611733 BA	20030826	US19980168783	19981008
US6779024 BB	20040817	US20020127734	20020422
US7006894 BB	20060228	US20030649805	20030826
US7061831 BB	20060613	US20010833258	20010412
US7216802 BA	20070515	US19990426553	19991022
US7715277 BB	20100511	US20020253963	20020924
US7922073 BB	20110412	US20070800792	20070507
US7933780 BB	20110426	US20010004941	20011203
US7941534 BB	20110510	US20040899520	20040726
US7978564 BB	20110712	US20010832770	20010411
US8391104 BB	20130305	US20090463257	20090508
WO0025720 A2	20000511	WO1999US25875	19991102
WO0025720 A3	20000908	WO1999US25875	19991102
WO0025720 B1	20001026	WO1999US25875	19991102
WO0025720 C2	20010201	WO1999US25875	19991102

Priority:

US19960033491P 19961220 US19970832613 19970328 US19970834634 19970414
US19980007290 19980114 US19980170169 19981013 US19980168783 19981008
US19980096269P 19980812 US19970955475 19971021 CA19972225353 19971219

US20010007970	20011113	US20010833258	20010412	US20000596715	20000619
US19980200881	19981130	US20000627987	20000728	US20010832770	20010411
WO1999US25875	19991102	US19990426553	19991022	US20010833358	20010412
US19980185137	19981103	US19980185137	19981103	US19980185132	19981103
US20010004941	20011203	US20020253963	20020924	US20020127734	20020422
US20040899520	20040726	US20070800792	20070507	US20090463257	20090508
US20030649805	20030826	US20110085670	20110413	US20110151057	20110601
US20110103740	20110509				

Probable Assignee: SOUTHWEST TECHNOLOGY INNOVATIONS LLC

Assignee(s): (std)**:** GRAHAM SAMUEL E ; HUERGA CARLOS DE ; HUERGA CARLOS DE LA ; HURSEY W RANDOLPH ; MCLARTY GEORGE C ; SORKIN FELIX L ; TELARIC L L C ; SMITH ROBERT M ; CHILD ANDREW D ; DE LA HUERGA CARLOS ; TELARIC LLC ; POMPARE TECHNOLOGIES INC

Assignee(s): SOUTHWEST TECHNOLOGY INNOVATIONS LLC ; SOUTHWEST TECHNOLOGY INNOIVATIONS LLC ; DELAHUERGA CARLOS ; DLH TECHNOLOGY LLC ; POMPARE TECHNOLOGIES LLC ; B BRAUN MEDICAL INC ; CARLOS DE LA HUERGA

Inventor(s): (std)**:** HUERGA CARLOS DE LA ; DELAHUERGA CARLOS ; DE LA HUERGA CARLOS

Inventor(s): CARLOS DE LA HUERGA

Agent(s): MBM AND CO; MOFFAT AND CO; QUARLES AND BRADY LLP; ANDRUS SCEALES STARKE AND SAWALL LLP; QUARLES AND BRADY

Designated states: AE AL AM AT AU AZ BA BB BE BF BG BJ BR BY CA CF CG CH CI CM CN CR CU CY CZ DE DK DM EE ES FI FR GA GB GD GE GH GM GN GR GW HR HU ID IE IL IN IS IT JP KE KG KP KR KZ LC LK LR LS LT LU LV MC MD MG MK ML MN MR MW MX NE NL NO NZ PL PT RO RU SD SE SG SI SK SL SN SZ TD TG TJ TM TR TT TZ UA UG UZ VN YU ZA ZW

3) Family number: 30001761 (US2002038088A)

Title: MINIATURIZED ULTRASOUND APPARATUS AND METHOD

Abstract: Source: US2002038088A Ultrasound apparatus for examining tissue in a region of interest in a body comprising a housing having a viewing aperture. An ultrasonic transducer is provided comprised of an array of ultrasonic elements disposed in the viewing aperture. Electrical pulses are supplied to the transducer for transducer excitation to introduce ultrasonic signals into the body for reflection from the tissue in the region of interest. The transducer is capable of converting ultrasonic signals reflected from the tissue within the body to the transducer to provide electrical signals. The electrical signals are gain corrected in accordance with time. In-phase and out-of-phase components of the electrical signals are provided and then digitized. The digitized electrical signals are collected to form one image for a single frame of the tissue in the region of interest in the body from transducer excitations less than thirty-three in number which is then displayed.

Classifications:

International (IPC 8-9): A61B8/00 A61B8/06 A61B8/08 A61B8/13 A61B8/14 G01N29/06 G01N29/11 G01N29/14 G01N29/24 G01N29/26 G01N29/34 G01N29/44 G01S15/89 G01S3/80 G01S7/52 G01S7/521 G03B42/06 G06F3/048 H04R1/02 (Advanced/Invention);
A61B8/00 A61B8/06 A61B8/08 (Advanced/Non-invention);
A61B8/00 A61B8/08 A61B8/14 G01N29/04 G01N29/06 G01N29/26 G01N29/34 G01N29/44 G01S15/00 G01S3/00 G01S7/52 G03B42/00 G06F3/048 (Core/Invention);
A61B8/06 A61B8/08 (Core/Non-invention)

International (IPC 1-7): A61B8/00 A61B8/02 A61B8/06 A61B8/08 A61B8/14 G01N29/00 G01N29/04 G01N29/18 G01N29/22 G01N29/24 G01N29/26 G01S15/89 G01S7/521 G03B42/06 G06F3/00 G06F3/02 H04R1/02

CPC: G01N2291/0228 G01S15/8915 G01S15/892 G01S15/8918 G01N29/06 G01N29/0609 G01N29/11 G01N29/348 G01N2291/017 G01N2291/02416 G01S7/52023 G01S7/52046 G01S15/8954 A61B8/4427 G06F19/3406 A61B8/56 A61B8/469 A61B8/4438 A61B8/08 A61B8/06 A61B8/0833 A61B8/0866 A61B8/00 A61B8/13 A61B8/4455 A61B8/4472 A61B8/488 G01S7/52034 G01S7/52079 G01S7/5208 A61B8/462 G01S7/52082 G01S7/52084 G01S7/52096 A61B8/467 G01S15/8979 G01S15/8981 A61B8/465 A61B8/4209 A61B8/463 A61B8/468 A61B8/4433 G01N29/14 G03B42/06 A61B8/14 G01N2291/02466

European: A61B8/00 A61B8/08 A61B8/44M A61B8/44N4 A61B8/44N8 A61B8/46B2 A61B8/46B4 A61B8/46B8 A61B8/46D A61B8/46D2 G01N29/06 G01N29/06C G01N29/10B G01N29/11 G01N29/34F G01S15/89D1C G01S15/89D3B G01S15/89D7A G01S7/52S13 G01S7/52S13B G01S7/52S13D G01S7/52S13F G01S7/52S16 G01S7/52S2 G01S7/52S2E G01S7/52S4 G03B42/06 G06F19/34A K61B8/00 K61B8/06 K61B8/08 K61B8/08H K61B8/08P K61B8/13 K61B8/44N4 K61B8/44N8 K61B8/46D2 K61B8/48J S01N291/01F S01N291/022L S01N291/024C S01N291/024K S01S15/89D7

US: 367/119 367/119P 382/254 382/260 600/407 600/437 600/437P 600/437S 600/440 600/440P 600/443 600/443P 600/443S 600/444 600/445 600/446 600/447 600/447P 600/447S 600/448 600/454 600/455 600/457 600/457P 600/459 600/459P

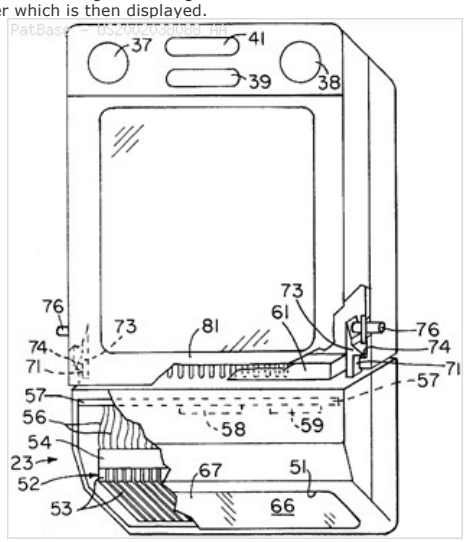

Family:

Publication number	Publication date	Application number	Application date
AU200069103 A5	20010319	AU20000069103	20000816
BRPI0013436 A	20020430	BR2000PI13436	20000816
BRPI0013436 B1	20131112	BR2000PI13436	20000816
CA2382227 AA	20020219	CA20002382227	20000816
CN100407997 C	20080806	CN20008013433	20000816
CN1376040 A	20021023	CN20008013433	20000816
DE10248742 A1	20030430	DE20021048742	20021018
DE10248745 A1	20030528	DE20021048745	20021018
DE10248746 A1	20030528	DE20021048746	20021018
DE10248747 A1	20040219	DE20021048747	20021018
DE10306924 A1	20030904	DE20031006924	20030219
EP1211982 A1	20020612	EP20000957492	20000816
EP1211982 A4	20050817	EP20000957492	20000816
JP2003126088 A2	20030507	JP20020304293	20021018
JP2003153899 A2	20030527	JP20020304292	20021018
JP2003180687 A2	20030702	JP20020304291	20021018
JP2003180688 A2	20030702	JP20020304295	20021018
JP2003299652 A2	20031021	JP20030041461	20030219
JP2003507114 T2	20030225	JP20010517942T	20000816
JP2010142658 A2	20100701	JP20100019579	20100129
JP2013039388 A2	20130228	JP20120219778	20121001
JP4282303 B2	20090617	JP20020304293	20021018
JP4721602 B2	20110713	JP20010517942T	20000816
JP4874497 B2	20120215	JP20020304295	20021018
JP5489758 B2	20140514	JP20100019579	20100129
JP5490198 B2	20140514	JP20120219778	20121001
KR100850268 B1	20080804	KR20027002211	20020220
KR20020043561 A	20020610	KR20027002211	20020220
TW481551 B	20020401	TW20000116870	20000819
US2002038088 AA	20020328	US20010860209	20010518
US2002138002 AA	20020926	US20010039910	20011020
US2002169378 AA	20021114	US20020167606	20020611
US2002173721 AA	20021121	US20020191853	20020708
US2003013959 AA	20030116	US20020081542	20020220
US2003078497 AA	20030424	US20010039862	20011020
US2003220573 AA	20031127	US20030445178	20030523
US2004024316 AA	20040205	US20010039922	20011020
US2004138569 AA	20040715	US20030697148	20031029
US2004147841 AA	20040729	US20040759558	20040116
US2004199078 AA	20041007	US20040825719	20040416
US2004267138 AA	20041230	US20040893085	20040716
US2005131294 AA	20050616	US20050043632	20050125
US2006036178 AA	20060216	US20050189437	20050725
US2006100520 AA	20060511	US20050311949	20051219
US2006116578 AA	20060601	US20060336088	20060120
US2007213615 AA	20070913	US20060592702	20061103
US2008316861 AA	20081225	US20080082412	20080409
US2010268082 AA	20101021	US20100684084	20100107
US2010268083 AA	20101021	US20100684086	20100107
US2015087983 AA	20150326	US20140270230	20140505
US2016011498 AA	20160114	US20150687801	20150415
US6251073 BA	20010626	US19990378175	19990820

US6569102 BB	20030527	US20010860209	20010518
US6685645 BA	20040203	US20020211391	20020801
US6733455 BB	20040511	US20020167606	20020611
US6773399 BB	20040810	US20010039922	20011020
US6896658 BB	20050524	US20010039862	20011020
US6936008 BB	20050830	US20010039910	20011020
US6997876 BB	20060214	US20040825719	20040416
US7022075 BB	20060404	US20030697148	20031029
US7238157 BB	20070703	US20040759558	20040116
US7361145 BB	20080422	US20040893085	20040716
US7682309 BB	20100323	US20050043632	20050125
US8226561 BB	20120724	US20100684084	20100107
US8679018 BB	20140325	US20060592702	20061103
US8764661 BB	20140701	US20100684086	20100107
WO0113796 A1	20010301	WO2000US22485	20000816
WO0113796 B1	20011115	WO2000US22485	20000816

Priority:

US19990378175	19990820	WO2000US22485	20000816	US20010860209	20010518
US20010039922	20011020	US20010039862	20011020	US20020370632	20020405
US20020191853	20020708	KR20027002211	20020220	JP20020304295	20021018
US20020167606	20020611	US20020081542	20020220	US20020370632P	20020405
US20020211391	20020801	US20010039910	20011020	JP20100019579	20021018
US20050043632	20050125	US20080082412	20080409	US20060336088	20060120
US20030697148	20031029	US20100684084	20100107	US20100684086	20100107
US20040893085	20040716	US20050311949	20051219	US20030445178	20030523
US20040825719	20040416	US20050189437	20050725	US20040759558	20040116
US20060592702	20061103	US20140270230	20140505	US20150687801	20150415

Probable Assignee: SHENZHEN MINDRAY BIO MEDICAL ELECTRONICS CO LTD

Assignee(s): (std)**:** BATOOL AILYA ; CHOU CHING HUA ; GRUNWALD SORIN ; NOVASONICS INC ; TARAKCI UMIT ; MCLAUGHLIN GLEN ; MO LARRY Y L ; JI TING LAN ; STANSON ROBERT ; IMRAN MIR A ; MCLAUGHLIN GLEN W ; NAPOLITANO DAVID ; HOM SOO ; XI XUFENG ; ZONARE MEDICAL SYSTEMS INC

Assignee(s): SHENZHEN MINDRAY BIO MEDICAL ELECTRONICS CO LTD ; MO LARRY YL ; NOVASONICS CORP ; NOVASONCIS CORP ; LIPPS WILLIAM D ; BRENNAN JAMES M ; AVINTIV SPECIALTY MATERIALS INC F K A POLYMER GROUP INC

Inventor(s): (std)**:** BATOOL AILYA ; BRENNAN JAMES M ; CHOU CHING HUA ; GLEN W MCLAUGHLIN ; GRUNWALD SORIN ; HOM SOO ; HOM SOON ; JI TING LAN ; LIPPS WILLIAM D ; MC LAUGHLIN GLEN ; MCLAUGHLIN GLEN ; MCLAUGHLIN GLEN W ; MIR A IMRAN ; IMRAN MIR A ; MO LARRY Y L ; NAPOLITANO DAVID ; STANSON ROBERT ; TARAKCI UMIT ; WILLIAM D LIPPS ; XI XUFENG

Inventor(s): MO LARRY YL ; JAMES M BRENNAN ; MO LARRY ; IMRAN MIR

Agent(s): SMART AND BIGGAR; CARR AND FERRELL LLP

Designated states: AE AG AL AM AT AU AZ BA BB BE BF BG BJ BR BY BZ CA CF CG CH CI CM CN CR CU CY CZ DE DK DM DZ EE ES FI FR GA GB GD GE GH GM GN GR GW HR HU ID IE IL IN IS IT JP KE KG KP KR KZ LC LI LK LR LS LT LU LV MA MC MD MG MK ML MN MR MW MX MZ NE NL NO NZ PL PT RO RU SD SE SG SI SK SL SN SZ TD TG TJ TM TR TT TZ UA UG UZ VN YU ZA ZW

4) Family number: 31033484 (US2004199052A) © PatBase

Title: ENDOSCOPIC IMAGING SYSTEM

Abstract: Source: US2004199052A An endoscopic imaging system includes a reusable control cabinet having a number of actuators that control the orientation of a lightweight endoscope that is connectable thereto. The endoscope is used with a single patient and is then disposed. The endoscope includes an illumination mechanism, an image sensor and an elongate shaft having one or more lumens located therein. A polymeric articulation joint at the distal end of the endoscope allows the distal end to be oriented by the control cabinet. The endoscope is coated with a hydrophilic coating that reduces its coefficient of friction and because it is lightweight, requires less force to advance it to a desired location within a patient.

Classifications:

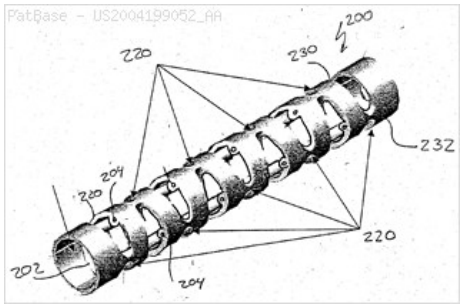

International (IPC 8-9): A61B1/00 A61B1/005 A61B1/008 A61B1/01 A61B1/015 A61B1/018 A61B1/04 A61B1/045 A61B1/05 A61B1/06 A61B1/12 A61B17/00 G02B23/24 (Advanced/Invention);
A61B1/00 A61B1/015 A61B1/04 A61B1/05 A61B1/06 A61B1/31 A61B17/00 (Advanced/Non-invention);
A61B1/00 A61B1/005 A61B1/008 A61B1/04 A61B1/06 G02B23/24 (Core/Invention);
A61B1/012 A61B1/05 A61B1/31 (Core/Non-invention)
International (IPC 1-7): A61B1/00 A61B1/008 A61B1/01 A61B1/015 A61B1/04 A61B1/06 A61B1/12
CPC: A61B2017/00314 A61B2017/00309 A61B2017/00327 A61B2017/0042 A61B1/0057 A61B1/00124 A61B1/04 A61B1/12 A61B1/00011 A61B1/00045 A61B1/00112 A61B1/0638 A61B1/00186 A61B1/00039 A61B1/00119 A61B1/008 A61B1/0653 A61B1/126 A61B1/128 A61B1/00059 A61B1/00071 A61B1/0008 A61B1/0052 A61B1/0055 A61B1/015 A61B1/31 A61B1/00137 A61B1/00066 A61B1/00018 A61B1/05 A61B1/0676 A61B1/0684 A61B1/0051 A61B1/0016 Y10T137/8376 A61B1/018 A61B1/00147 A61B1/045
European: A61B1/005B A61B1/005B4 A61B1/005B6 A61B1/008 A61B1/00C6 A61B1/00C9 A61B1/00E4 A61B1/00E4H A61B1/00F A61B1/00F6 A61B1/00P A61B1/015 A61B1/06 A61B1/06P A61B1/06R4 A61B1/06R6 A61B1/12E A61B1/12G K61B1/005B K61B1/005B4 K61B1/015 K61B1/05 K61B1/06R6 K61B1/31
US: 137/560 137/560S 600/103 600/109 600/109S 600/117 600/117P 600/118 600/118P 600/118S 600/127 600/129 600/129S 600/131 600/132 600/132P 600/139 600/141 600/141P 600/141S 600/142 600/142P 600/143 600/144 600/145 600/146 600/146S 600/152 600/152S 600/153 600/156 600/156P 600/156S 600/159 600/159P 600/169 600/179 600/179P 600/179S

Family:

Publication number	Publication date	Application number	Application date
AU2004226380 AA	20041014	AU20040226380	20040329
AU2005292229 AA	20060413	AU20050292229	20050930
AU2005292229 BB	20120315	AU20050292229	20050930
CA2521027 AA	20050930	CA20042521027	20040329
CA2580718 AA	20070316	CA20052580718	20050930
CN1794944 A	20060628	CN200480014054	20040329
EP1610665 A2	20060104	EP20040749481	20040329
EP1610665 B1	20130612	EP20040749481	20040329
EP1806997 A2	20070718	EP20050815595	20050930
EP2266452 A2	20101229	EP20100075568	20050930
EP2266452 A3	20120718	EP20100075568	20050930
EP2286715 A2	20110223	EP20100075560	20050930
EP2286715 A3	20120502	EP20100075560	20050930
EP2617350 A1	20130724	EP20130164194	20040329
EP2617350 B1	20141224	EP20130164194	20040329
EP2649928 A1	20131016	EP20130175808	20040329
EP2907446 A1	20150819	EP20140194353	20040329
IL171126 A1	20100415	IL20050171126	20050927
JP2006521882 T2	20060928	JP20060509401T	20040329
JP2008514381 T2	20080508	JP20070534861T	20050930
JP2010158566 A2	20100722	JP20100097432	20100420
JP2013078608 A2	20130502	JP20120279050	20121221
JP4676427 B2	20110427	JP20060509401T	20040329
JP5192813 B2	20130508	JP20070534861T	20050930
US2004199052 AA	20041007	US20030406149	20030401
US2005075538 AA	20050407	US20040811781	20040329
US2005119527 AA	20050602	US20040955949	20040930
US2005131279 AA	20050616	US20040956011	20040930
US2005154262 AA	20050714	US20040955923	20040930
US2005197536 AA	20050908	US20040956007	20040930
US2005222499 AA	20051006	US20040955922	20040930
US2005245789 AA	20051103	US20040955950	20040930
US2008269561 AA	20081030	US20080111082	20080428
US2010048999 AA	20100225	US20090546680	20090824
US2010076266 AA	20100325	US20090561989	20090917
US2010256448 AA	20101007	US20100751029	20100331
US2012071720 AA	20120322	US20110302555	20111122
US2012165608 AA	20120628	US20110341191	20111230
US2013261396 AA	20131003	US20130900309	20130522
US2013289352 AA	20131031	US20130847984	20130320
US2014073852 AA	20140313	US20130081841	20131115
US2014088358 AA	20140327	US20130092505	20131127
US2015216396 AA	20150806	US20150615047	20150205
US7413543 BB	20080819	US20040811781	20040329
US7578786 BB	20090825	US20040956007	20040930
US7591783 BB	20090922	US20040956011	20040930
US8118732 BB	20120221	US20040955949	20040930
US8425408 BB	20130423	US20090561989	20090917
US8475366 BB	20130702	US20090546680	20090824
US8535219 BB	20130917	US20100751029	20100331
US8608648 BB	20131217	US20110302555	20111122
US8622894 BB	20140107	US20110341191	20111230
WO04086957 A2	20041014	WO2004US09464	20040329
WO04086957 A3	20050324	WO2004US09464	20040329
WO06039646 A2	20060413	WO2005US35479	20050930
WO06039646 A3	20060810	WO2005US35479	20050930

Priority:

US20030406149 20030401 JP20060509401 20040329 US20040811781 20040329

WO2004US09464	20040329	EP20040749481	20040329	EP20130164194	20040329
EP20050815595	20050930	WO2005US35479	20050930	US20040955923	20040930
US20040955950	20040930	US20040956011	20040930	US20040955922	20040930
US20040956007	20040930	US20040955949	20040930	US20080111082	20080428
US20090546680	20090824	US20090561989	20090917	US20100751029	20100331
US20110302555	20111122	US20110341191	20111230	JP20070534861	20050930
US20130900309	20130522	US20130847984	20130320	US20130081841	20131115
US20130092505	20131127	US20150615047	20150205		

Probable Assignee: BOSTON SCIENTIFIC LIMITED

Assignee(s): (std)**:** ANDERSON FRANK J ; BANIK MICHAEL S ; BOSTON SCIENT LTD ; BOULAIS DENNIS R ; BRAUNSTEIN DANIEL J ; BOSTON SCIENT SCIMED INC ; FANTONE STEPHEN D ; COUVILLON LUCIEN A JR ; CHIN ALBERT C ; CLARK RICHARD J ; FOSTER MILLER INC ; CHIN ALBERT C C ; CLARK RICHARD JOSEPH ; SAPERSTEIN ERIC ; SMITH DAVID ; MEHTA NEIL R ; STEWART WILLIAM C ; COUVILLON JR LUCIEN ALFRED ; SCIMED LIFE SYSTEMS INC ; MACNAMARA FRANCIS T ; ORBAND DANIEL G ; SABER MICHAEL P ; WIESMAN RICHARD M ; HUNTER IAN W ; MEHTA NEIL RASIK ; KIROUAC ANDREW PETER ; MASON TIMOTHY J ; KIROUACA ANDREW P

Assignee(s): GREAVES ANNA ER ; KNAPP KEITH ; SABER MICHAEL ; MASON TIMOTHY JAMES ; GREAVES AMNA ER ; OPTIKOS CORP ; KIROUAC ANDREW P ; WEISSBURG DAVID L ; TURTURRO VINCENT ; GREAVES AMNA ELONA RATHORE ; COUVILLON LUCIEN ALFRED ; COPPOLA PATSY ANTHONY ; GREAVES AMNA E R ; COPPOLA PATSY A ; COUVILLON LUCIEN AJR ; BOSTON SCIENTIFIC LTD ; BOSTON SCIENTIFIC LIMITED ; BOULAIS DENNIS ; CHIN ALBERT CC ; BOSTON SCIENTIFIC SCIMED INC

Inventor(s): (std)**:** ALBERT C C CHIN ; ANDERSON FRANK J ; ANDREW P KIROUAC ; BANIK MICHAEL S ; BANIK MICHAEL S BOULAIS DENNIS ; BOULAIS DENNIS R ; BRAUNSTEIN DANIEL J ; CHIN ALBERT C C ; CLARK RICHARD J ; CLARK RICHARD JOSEPH ; COPPOLA PATSY A ; COPPOLA PATSY ANTHONY ; COUVILLON LUCIEN ALFRED ; DANIEL G ORBAND ; DANIEL J BRAUNSTEIN ; COUVILLON LUCIEN A ; COUVILLON LUCIEN A JR ; DENNIS R BOULAIS ; FANTONE STEPHEN D ; FRANCIS T MACNAMARA ; FRANK J ANDERSON ; GREAVES AMNA ELONA RATHORE ; GREAVES ANNA E R ; GREAVES ANNA ER ; K RICHARD J WISEMAN RICHARD M ; KIROUAC ANDREW P ; KIROUAC ANDREW PETER ; KNAPP KEITH ; LUCIEN A JR COUVILLON ; HUNTER IAN W ; IAN W HUNTER ; MACNAMARA FRANCIS T ; MEHTA NEIL R ; MEHTA NEIL RASIK ; MICHAEL S BANIK ; MICHAEL SABER ; NEIL R MEHTA ; ORBAND DANIEL G ; PATSY A COPPOLA ; RICHARD J CLARK ; RICHARD M WIESMAN ; SABER MICHAEL ; SABER MICHAEL P ; STEPHEN D FANTONE ; TIMOTHY J MASON ; WIESMAN RICHARD M ; WISEMAN RICHARD M ; COUVILLON LUCINE A ; BOULAIS DENNIS ; WEISSBURG DAVID L ; MASON TIMOTHY J ; MASON TIMOTHY JAMES ; TURTURRO VINCENT ; STEWART WILLIAM C ; SMITH DAVID ; SAPERSTEIN ERIC ; COUVILLON JR LUCIEN ALFRED ; COUVILLON JR LUCIEN A ; CHIN ALBERT C ; KIROUACA ANDREW P ; GREAVES AMNA E R

Inventor(s): GREAVES AMNA ; GREAVES AMNA ER ; STEWART WILLIAM ; STEWART WILLIAM CHARLES ; MEHTA NEIL ; WEISSBURG DAVID ; VINCENT TURTURRO ; WIESMAN RICHARD ; ORBAND DANIEL ; MASON TIMOTHY ; K RICHARD J ; LUCINE A COUVILLON ; MACNAMARA FRANCIS ; K RICHARD J WISEMAN RICHARD M MASON TIMOTHY J MEHT ; KEITH KNAPP ; KIROUAC ANDREW ; HUNTER IAN ; GREAVES ANNA E ; GREAVES AMNA ELONA ; FANTONE STEPHEN ; COUVILLON LUCIEN AJR ; DAVID SMITH ; DENNIS BOULAIS ; COUVILLON LUCIEN ; COPPOLA PATSY ; CHIN ALBERT CC ; CLARK RICHARD ; CHIN ALBERT ; BRAUNSTEIN DANIEL ; BANIK MICHAEL S BOULAIS DENNIS R COUVILLON LUCIEN ; BANIK MICHAEL ; ANDERSON FRANK

Agent(s): FB RICE; FREEHILLS PATENT AND TRADE MARK ATTORNEYS; FREEHILLS PATENT ATTORNEYS; HERBERT SMITH FREEHILLS; SMART AND BIGGAR; CHARIG RAYMOND JULIAN; CLARK DAVID JULIAN; VOSSIUS AND PARTNER; POTTER CLARKSON LLP; VOSSIUS AND PARTNER PATENTANWAELTE RECHTSANWAELTE MBB; REINHOLD COHN AND PARTNERS; CHRISTENSEN OCONNOR JOHNSON KINDNESS PLLC; CHRISTENSEN O'CONNOR JOHNSON KINDNESS PLLC; FINNEGAN HENDERSON FARABOW GARRETT AND DUNNER LLP; KLARQUIST SPARKMAN LLP; BOOKOFF MCANDREWS PLLC

Designated states: AE AG AL AM AT AU AZ BA BB BE BF BG BJ BR BW BY BZ CA CF CG CH CI CM CN CO CR CU CY CZ DE DK DM DZ EC EE EG ES FI FR GA GB GD GE GH GM GN GQ GR GW HR HU ID IE IL IN IS IT JP KE KG KM KP KR KZ LC LI LK LR LS LT LU LV LY MA MC MD MG MK ML MN MR MW MX MZ NA NE NG NI NL NO NZ OM PG PH PL PT RO RU SC SD SE SG SI SK SL SM SN SY SZ TD TG TJ TM TN TR TT TZ UA UG US UZ VC VN YU ZA ZM ZW

5) Family number: 53291841 (US2013075296A)

© PatBase

Title: MARKING OF CAN ENDS AND/OR PULL **TABS** USING PHOTONICALLY SENSITIVE INK

Abstract: Source: US2013075296A A system and method for laser marking can ends, especially pull **tabs**, includes coating a portion of the can end and/or pull **tab** with a lacquer having a photonically active material and directing a laser to the lacquer to alter the appearance of the of the photonically active material to form an image, especially a high resolution image. The decorated can end and/or **tabs** may have a high resolution image.

Classifications:
International (IPC 8-9): B05D3/06 B21D51/38 B23K26/00 B41M5/26 B41M5/28 B41M5/30 B41M5/323 B41M5/46 B65D17/00 B65D17/34 B65D17/347 B65D17/353 B65D25/20 B65D41/32 B65D51/00 G06K1/12 G06K19/06 G06K19/10 G06K7/00 (Advanced/Invention);
B41M5/26 B65D17/00 G06K19/06 (Core/Invention);
B41M B65D G06K (Subclass/Invention)
CPC: B65D17/161 B21D51/383 B65D41/32 B41M5/24 B41M5/28 B65D17/165 B65D2517/0052 B65D2517/0053
US: 206/459.5 220/212 220/270 220/273 413/18 413/25 427/556

Family:

Publication number	Publication date	Application number	Application date
AU2012316033 AA	20130404	AU20120316033	20120927
AU2012316040 AA	20130404	AU20120316040	20120927
CA2850174 AA	20140326	CA20122850174	20120927
CA2850176 AA	20140326	CA20122850176	20120927
CN103946119 A	20140723	CN201280058178	20120927
CN104024115 A	20140903	CN201280058176	20120927
CO6920277 A2	20140410	CO20140066683	20140328
CO6920278 A2	20140410	CO20140066693	20140328
EP2760752 A1	20140806	EP20120772649	20120927
EP2797818 A2	20141105	EP20120779215	20120927
HK1200420 A1	20150807	HK20150100738	20150123
HK1201502 A1	20150904	HK20150101959	20150227
JP2015501259 T2	20150115	JP20140533311T	20120927
JP2015502890 T2	20150129	JP20140533312T	20120927
MX2014003640 A1	20140521	MX20140003640	20120927
MX2014003772 A1	20140801	MX20140003772	20120927
RU2014116968 A	20151110	RU20140116968	20120927
TH143434 A	20151012	TH20141001665	20120927
US2013075296 AA	20130328	US20120629071	20120927
US2014291322 AA	20141002	US20120347796	20120927
US2015034649 AA	20150205	US20120345547	20120927
WO13049313 A2	20130404	WO2012US57507	20120927
WO13049313 A3	20130523	WO2012US57507	20120927
WO13049320 A1	20130404	WO2012US57518	20120927

Priority:

US20110539784P 20110927 US20120629071 20120927 WO2012US57507 20120927
WO2012US57518 20120927 US20120347796 20120927 US20120345547 20120927

Probable Assignee: CROWN PACKAGING TECHNOLOGY INC

Assignee(s): (std): GROWN PACKAGING TECHNOLOGY INC ; VAUGHAN LAURA JANE ; CROWN PACKAGING TECHNOLOGY INC

Assignee(s): DEUTSCHE BANK NEW YORK BRANCH COLLATERAL AGENT AG AS ; COLVILLE STEPHEN MILES ; RAMSEY CHRISTOPHER PAUL ; MCGIRR LAURA JANE

Inventor(s): (std): CHRISTOPHER PAUL RAMSEY ; COLVILLE STEPHEN MILES ; LAURA JANE MCGIRR ; MCGIRR LAURA JANE ; RAMSEY CHRISTOPHER PAUL ; STEPHEN MILES COLVILLE ; VAUGHAN LAURA JANE

Agent(s): PETER MAXWELL AND ASSOCIATES; GOWLING LAFLEUR HENDERSON LLP; SILVANA MARIA LOPEZ DIAZ; LIND ROBERT; INO SARI; DESHIMARU TAKESHI; MATSUSHITA MITSURU; KURASAWA ICHIRO; KUMAKURA YOSHIO; FULLMER HAROLD H

Designated states: AE AG AL AM AO AT AU AZ BA BB BE BF BG BH BJ BN BR BW BY BZ CA CF CG CH CI CL CM CN CO CR CU CY CZ DE DK DM DO DZ EC EE EG ES FI FR GA GB GD GE GH GM GN GQ GR GT GW HN HR HU ID IE IL IN IS IT JP KE KG KM KN KP KR KZ LA LC LI LK LR LS LT LU LV LY MA MC MD ME MG MK ML MN MR MT MW MX MY MZ NA NE NG NI NL NO NZ OM PA PE PG PH PL PT QA RO RS RU RW SC SD SE SG SI SK SL SM SN ST SV SY SZ TD TG TH TJ TM TN TR TT TZ UA UG US UZ VC VN ZA ZM ZW

6) Family number: 56033839 (US2014084003A)

© PatBase

Title: CAN ENDS HAVING MACHINE READABLE INFORMATION

Abstract: Source: US2014084003A A system and method for laser marking can end, including a can end center panel and/or pull **tab**. The decorated can end and/or **tabs** may have a machine readable image.

Classifications:
International (IPC 8-9): B21D51/44 B23K26/00 B23K26/36 B65B43/00 B65D17/00 B65D17/34 B65D51/00 B65D51/24 (Advanced/Invention);
B21D51/38 (Advanced/Non-invention)
CPC: B65B61/26 B65D51/245 B21D51/383 B23K26/365 B65B43/00 B65D51/00 B65D2517/0053 B23K26/362 B23K26/364
US: 206/459.5 219/121.85 220/270 413/14 413/18 53/492

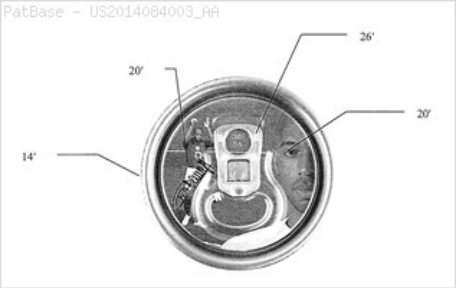

Family:

Publication number	Publication date	Application number	Application date
US2014084003 AA	20140327	US20120628968	20120927
US9187221 BB	20151117	US20120628968	20120927

Priority:
US20110539784P 20110927 US20120628968 20120927

Probable Assignee: CROWN PACKAGING TECHNOLOGY INC
Assignee(s): (std): CROWN PACKAGING TECHNOLOGY INC
Assignee(s): DEUTSCHE BANK NEW YORK BRANCH COLLATERAL AGENT AG AS
Inventor(s): (std): RAMSEY CHRISTOPHER PAUL ; VAUGHAN LAURA JANE
Agent(s): BAKER AND HOSTETLER LLP

7) Family number: 57467618 (US2016034805A)

© PatBase

Title: MATRIX BARCODES ON CAN COMPONENTS

Abstract: Source: US2016034805A A matrix barcode on a can component, such as a can end panel, a pull **tab** of a can end, or the coil stock, is formed by laser application that makes spots that represent the matrix barcode modules.

Classifications:
International (IPC 8-9): B23K26/00 B65D1/12 B65D17/00 B65D25/20 G06K19/06 (Advanced/Invention)
CPC: G06K19/06046 G06K19/06121 G06K19/06037 B65D1/12 B65D25/205 B65D17/165 B23K26/0087 B65D2517/0013 G06K19/06028

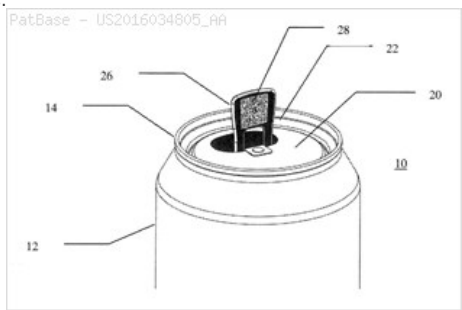

Family:

Publication number	Publication date	Application number	Application date
CA2905436 AA	20150910	CA20142905436	20140312
CN105051757 A	20151111	CN201480016153	20140312
EP2973235 A1	20160120	EP20140715183	20140312
US2016034805 AA	20160204	US20140773908	20140312
WO14150647 A1	20140925	WO2014US23878	20140312

Priority:
US20130787742P 20130315 WO2014US23878 20140312 US20140773908 20140312

Probable Assignee: CROWN PACKAGING TECHNOLOGY INC
Assignee(s): (std): CROWN PACKAGING TECHNOLOGY INC
Assignee(s): RAMSEY CHRISTOPHER PAUL
Inventor(s): (std): RAMSEY CHRISTOPHER PAUL
Agent(s): GOWLING LAFLEUR HENDERSON LLP; LIND ROBERT; FULLMER HAROLD H
Designated states: AE AG AL AM AO AT AU AZ BA BB BE BF BG BH BJ BN BR BW BY BZ CA CF CG CH CI CL CM CN CO CR CU CY CZ DE DK DM DO DZ EC EE EG ES FI FR GA GB GD GE GH GM GN GQ GR GT GW HN HR HU ID IE IL IN IR IS IT JP KE KG KM KN KP KR KZ LA LC LI LK LR LS LT LU LV LY MA MC MD ME MG MK ML MN MR MT MW MX MY MZ NA NE NG NI NL NO NZ OM PA PE PG PH PL PT QA RO RS RU RW SA SC SD SE SG SI SK SL SM SN ST SV SY SZ TD TG TH TJ TM TN TR TT TZ UA UG US UZ VC VN ZA ZM ZW