SUPERINTENDENCIA DE INDUSTRIA Y COMERCIO

RAD: 14-156156- -2 **FECHA**: 2015-10-29 09:39:45
DEP: 2020 DIRECCION DE NUEVAS CREACIONES **EVE:** 378 FASE NACIONAL INCLUIDO CAPITULO I
TRA: 11 PCT-PATENTE DE INVENCION CAPITULOS I Y II **FOLIOS**: 9
ACT: 519 TRASLADOINFORME

DIRECCIÓN DE NUEVAS CREACIONES

2020
Bogotá, D.C.,

Abogado(a)/Señor(a)
JUAN PABLO CADENA SARMIENTO

Asunto: Radicación: 14-156156- -2
Trámite: 11
Evento: 378
Actuación: 519
Oficio: 12952
Folios: 9

Patente de Invención	X			Patente de Modelo de Utilidad	
Vía Nacional					
Vía PCT (Fase Nacional)	X	Capítulo I	X	Capítulo II	
No. Solicitud Internacional	PCT/ES2012/070849				
Fecha de Presentación Internacional	05/12/2012				

Como resultado del Examen de Fondo realizado, con fundamento en el Artículo 45 de la Decisión 486 de la Comisión de la Comunidad Andina, se comunica:

1. Documentos estudiados

Descripción:	Rad. N° 14-156156-00000-0000	18/Julio/2014
Reivindicaciones:	Rad. N° 14-156156-00000-0000	18/Julio/2014
Dibujos:	Rad. N° 14-156156-00000-0000	18/Julio/2014
Prioridad:	ES P201132048	19/Diciembre/2011

Superintendencia de Industria y Comercio: Cra 13 No. 27-00 pisos 1, 3, 4, 5, 6, 7 y 10 - PBX: (571) 5870000
E-mail: contactenos@sic.gov.co - Bogotá D.C., Colombia.
Señor ciudadano la entidad le ofrece los siguientes canales para hacer seguimiento a su solicitud así:
Página web: www.sic.gov.co
Centro de atención telefónica en Bogotá: 5920400
Línea gratuita a nivel nacional: 018000 910165
Kiosco Informático Centro Comercial Gran Estación en Bogotá
MINCOMERCIO INDUSTRIA Y TURISMO

2. Análisis de la Prioridad

Se acepta la reivindicación de prioridad porque ésta solicitud fue presentada dentro del plazo establecido (Art. 9 D 486) y su contenido técnico corresponde con el de la prioridad reivindicada.

3. Objeto de la invención

De acuerdo con lo establecido en el numeral 1.2.2.2 del Capítulo Primero del Título X de la Circular Única para efectos del examen de patentabilidad, se tendrá en cuenta la tasa pagada por el solicitante al momento de comenzar el examen para las reivindicaciones adicionales; esto es que cuando la solicitud contenga más de diez (10) reivindicaciones y no se haya pagado la tasa complementaria, sólo se estudiarán las cubiertas por la tasa pagada. Por lo tanto se estudiaran las reivindicaciones 1 a 14.

Título de la solicitud: “Procedimiento de diseño y de fabricación de una lente oftálmica monofocal y lente correspondiente” (Ver página 1 del radicado bajo el N° 14-156156-00000-0000).

El problema planteado en esta solicitud consiste en la necesidad de diseñar y suministrar un tipo de lentes que puedan corregir las aberraciones, percibidas por el usuario, debidas, entre otras cosas, al hecho de colocar la lente en una predeterminada posición e inclinación respecto al ojo.

Para resolver este problema técnico, la solicitud en estudio proporciona el diseño de una superficie de una lente oftálmica monofocal, caracterizado porque dicha superficie está definida por una función analítica que comprende una parte hiperbólica y una parte exponencial.

El objeto de la presente Solicitud se relaciona con la Clasificación Internacional de Patentes (CIP): G02B 3/06; G02C 7/02.

4. No es una invención (Art 15 D 486 literal (a))

El objeto de las reivindicaciones 1 a 14 no se considera una invención porque revela un método matemático.

5. De la Solicitud de Patente

Reivindicaciones (Art 30 D 486)

Las reivindicaciones independientes 1, 11 y 13 y sus reivindicaciones dependientes no son claras dado que hacen referencia al cálculo de una función analítica que comprende una parte hiperbólica y una parte exponencial en donde las variables *x* y *y* no están definidas, lo cual no se consideran una invención según el artículo 15 de la decisión 486.

Superintendencia de Industria y Comercio: Cra 13 No. 27-00 pisos 1, 3, 4, 5, 6, 7 y 10 - PBX: (571) 5870000
E-mail: contactenos@sic.gov.co - Bogotá D.C., Colombia.
Señor ciudadano la entidad le ofrece los siguientes canales para hacer seguimiento a su solicitud así:
Página web: www.sic.gov.co
Línea gratuita a nivel nacional: 018000 910165
Centro de atención telefónica en Bogotá: 5920400
Kiosco Informático Centro Comercial Gran Estación en Bogotá
MINCOMERCIO INDUSTRIA Y TURISMO

6. Determinación del Estado de la Técnica

El estado de la técnica se determinó con base en la fecha de presentación de la solicitud de prioridad: Diciembre 19 de 2011, y se encontró el siguiente documento que anticipa el objeto de esta solicitud:

Ítem	Documento	Título	Fecha de Publicación
D1	US 2008/0013043	"Toric contact lenses with controlled optical power profile"	17/Enero/2008
D2	US 7,111,938	"Automatic lens design and manufacturing system"	26/Septiembre/2006

El documento D1[1] divulga un método para producir un lente de contacto tórico que tiene un perfil óptico controlado y unos lentes de contacto tórico que tienen una superficie cilíndrica óptica (o potencia) para corregir errores en la visión de astigmatismo y un perfil bajo de potencia óptica controlada que proporciona una mejor corrección de la visión (Fl.1, Resumen).

El documento D2[2] divulga un método para diseñar y fabricar un lente oftálmico personalizado, tal como un lente de contacto o un lente intraocular, capaz de corregir aberraciones de orden superior de un ojo (Fl.1, Resumen).

7. **Examen de Patentabilidad** (Art 14 D486)

Novedad (Art 16 D486)

La reivindicación 1 consiste en: *"Procedimiento de diseño de una superficie de una lente oftálmica monofocal, caracterizado porque: ..."* (Ver página 18 del radicado N° 14-156156-00000-0000).

Comparación de las características técnicas esenciales, con las del Estado de la Técnica:

Características esenciales	D1
Procedimiento de diseño de una superficie de una lente oftálmica monofocal, caracterizado porque:	Un método para producir un lente de contacto tórico que tiene un perfil óptico controlado (Párrs. 0076 y 0077), caracterizado porque:
La superficie está definida por una función analítica del tipo: $f(x,y)=a_1+a_2\sqrt{1-a_3x^2-a_4y^2}+a_5\exp\{a_6x^4+a_7y^4+a_8x^2y^2\}$ donde a_5 es diferente de 0 y uno de los coeficientes a_6, a_7 y a_8 es diferente de 0.	La superficie está definida por una función analítica en donde un sistema de CAD es utilizado para representar de forma precisa y matemáticamente superficies de alto orden para diseñar un lente de contacto (Reiv. 7; Párrs. 0037, 0038 y 0068).

[1] https://www.google.com.co/patents/US20080013043?dq=US+2008/0013043&hl=en&sa=X&ved=0CBsQ6AEwAGoVChMI5faLt_iQyAIVgvceCh3q5gDM
[2] https://www.google.com.co/patents/US7111938?dq=US+7,111,938&hl=en&sa=X&ved=0CBsQ6AEwAGoVChMIgKS9ibDIyAIVAyYeCh0xrwET

Superintendencia de Industria y Comercio: Cra 13 No. 27-00 pisos 1, 3, 4, 5, 6, 7 y 10 - PBX: (571) 5870000
E-mail: contactenos@sic.gov.co - Bogotá D.C., Colombia.
Señor ciudadano la entidad le ofrece los siguientes canales para hacer seguimiento a su solicitud así:
Página web: www.sic.gov.co | Línea gratuita a nivel nacional: 018000 910165
Centro de atención telefónica en Bogotá: 5920400 | Kiosco Informático Centro Comercial Gran Estación en Bogotá
MINCOMERCIO INDUSTRIA Y TURISMO

De acuerdo con la tabla anterior, las características esenciales del método de la reivindicación 1 habían sido divulgadas previamente en el documento D1, por lo tanto, la materia reivindicada no es nueva.

Asimismo, el documento D1 divulga las características de las reivindicaciones dependientes así:

- Reivindicación 5: donde la superficie es la superficie cóncava del lente (Párrs. 0074).

- Reivindicación 6: donde a_1 es igual a 0, a_2 es igual al radio de curvatura en el centro de la superficie, con signo negativo y a_5 es igual al radio de curvatura en el centro de la superficie (Párr. 0068 y Reiv. 6).

- Reivindicación 10: cada uno de los coeficientes de la función analítica tiene un valor que está comprendido entre +/- 30% del valor nominal correspondiente obtenido a partir de la optimización (Párr. 0068 y Reiv. 6).

Las reivindicaciones dependientes 5, 6 y 10 no mencionan alguna característica que haga nuevo al proceso de la reivindicación 1, por lo cual se considera que no son nuevas.

La reivindicación 11 consiste en: *"Procedimiento de fabricación de una lente oftálmica monofocal, caracterizado porque: ..."* (Ver página 20 del radicado N° 14-156156-00000-0000).

Comparación de las características técnicas esenciales, con las del Estado de la Técnica:

Características esenciales	**D1**
Procedimiento de fabricación de una lente oftálmica monofocal, caracterizado porque comprende:	Un método para producir un lente de contacto tórico que tiene un perfil óptico controlado (Párrs. 0076 y 0077), caracterizado porque comprende:
Mecanización de una superficie de la lente oftálmica donde la superficie está definida por una función analítica del tipo: $f(x,y) = a_1 + a_2\sqrt{1-a_3x^2-a_4y^2} + a_5\exp\{a_6x^4+a_7y^4+a_8x^2y^2\}$	La superficie está definida por una función analítica en donde un sistema mecánico de CAD es utilizado para representar de forma precisa y matemáticamente superficies de alto orden para diseñar un lente de contacto (Reiv. 7; Párrs. 0037, 0038 y 0068).

De acuerdo con la tabla anterior, las características esenciales del método de la reivindicación 11 habían sido divulgadas previamente en el documento D1, por lo tanto, la materia reivindicada no es nueva.

Asimismo, el documento D1 divulga las características de las reivindicaciones dependientes así:

- Reivindicación 12: donde a_5 es diferente de 0 y uno de los coeficientes a_6, a_7 y a_8 es diferente de 0 (Párrs. 0037, 0038 y 0068).

La reivindicación dependiente 12 no menciona alguna característica que haga nuevo al proceso de la reivindicación 11, por lo cual se considera que no es nueva.

La reivindicación 13 consiste en: *"Lente oftálmica monofocal, caracterizada porque: ..."* (Ver página 18 del radicado N° 14-156156-00000-0000).

Superintendencia de Industria y Comercio: Cra 13 No. 27-00 pisos 1, 3, 4, 5, 6, 7 y 10 - PBX: (571) 5870000
E-mail: contactenos@sic.gov.co - Bogotá D.C., Colombia.
Señor ciudadano la entidad le ofrece los siguientes canales para hacer seguimiento a su solicitud así:
Página web: www.sic.gov.co
Línea gratuita a nivel nacional: 018000 910165
Centro de atención telefónica en Bogotá: 5920400
Kiosco Informático Centro Comercial Gran Estación en Bogotá
MINCOMERCIO INDUSTRIA Y TURISMO

Comparación de las características técnicas esenciales, con las del Estado de la Técnica:

Características esenciales	D1
Lente oftálmica monofocal, caracterizada porque:	Un lente de contacto tórico que tiene un perfil óptico controlado (Párrs. 0076 y 0077), caracterizado porque:
La superficie está definida por una función analítica del tipo: $f(x,y)=a_1+a_2\sqrt{1-a_3x^2-a_4y^2}+a_5\exp\{a_6x^4+a_7y^4+a_8x^2y^2\}$	La superficie está definida por una función analítica en donde un sistema de CAD es utilizado para representar de forma precisa y matemáticamente superficies de alto orden para diseñar un lente de contacto (Reiv. 7; Párrs. 0037, 0038 y 0068).

De acuerdo con la tabla anterior, las características esenciales del lente oftálmico de la reivindicación 13 habían sido divulgadas previamente en el documento D1, por lo tanto, la materia reivindicada no es nueva.

Asimismo, el documento D1 divulga las características de las reivindicaciones dependientes así:

- Reivindicación 14: donde a_5 es diferente de 0 y uno de los coeficientes a_6, a_7 y a_8 es diferente de 0 (Párrs. 0037, 0038 y 0068).

La reivindicación dependiente 14 no menciona alguna característica que haga nuevo al proceso de la reivindicación 13, por lo cual se considera que no es nueva.

Nivel inventivo (Art18 D486)

La reivindicación 2 consiste en un: *"Procedimiento según la reivindicación 1, caracterizado porque dichos coeficientes se calculan mediante un cálculo iterativo que comprende las siguientes etapas: ..."* (Ver página 18 del radicado N° 14-156156-00000-0000).

Comparación de las características técnicas **esenciales**, con las del Estado de la Técnica:

Características **esenciales**	D1	D2
Procedimiento de diseño de una superficie de una lente oftálmica monofocal, caracterizado porque:	Un método para producir un lente de contacto tórico que tiene un perfil óptico controlado (Párrs. 0076 y 0077), caracterizado porque:	Un método para diseñar y fabricar un lente oftálmico personalizado, tal como un lente de contacto o un lente intraocular (Col. 3, líneas 7 a 20).
La superficie está definida por una función analítica del tipo: $f(x,y)=a_1+a_2\sqrt{1-a_3x^2-a_4y^2}+a_5\exp\{a_6x^4+a_7y^4+a_8x^2y^2\}$ donde a_5 es diferente de 0 y uno de los coeficientes a_6, a_7 y a_8 es diferente de 0.	La superficie está definida por una función analítica en donde un sistema de CAD es utilizado para representar de forma precisa y matemáticamente superficies de alto orden para diseñar un lente de contacto (Reiv. 7; Párrs. 0037, 0038 y 0068).	Los lentes son diseñados por un módulo CAD y un módulo CAM (Col. 18, línea 59 a Col. 19, línea 22). Pero no menciona el tipo de función analítica utilizada en la superficie del lente.

Superintendencia de Industria y Comercio: Cra 13 No. 27-00 pisos 1, 3, 4, 5, 6, 7 y 10 - PBX: (571) 5870000
E-mail: contactenos@sic.gov.co - Bogotá D.C., Colombia.
Señor ciudadano la entidad le ofrece los siguientes canales para hacer seguimiento a su solicitud así:
Página web: www.sic.gov.co | Línea gratuita a nivel nacional: 018000 910165
Centro de atención telefónica en Bogotá: 5920400 | Kiosco Informático Centro Comercial Gran Estación en Bogotá
MINCOMERCIO INDUSTRIA Y TURISMO

Los coeficientes se calculan mediante un cálculo iterativo que comprende las siguientes etapas: [a] fijar un valor para el indice de refracción de la lente oftálmica y para la curva base que se empleara para fabricar la lente oftálmica, [b] fijar unos valores de esfera, cilindro y eje del cilindro que deberá cumplir la lente oftálmica, [c] fijar unos valores nominales iniciales para los coeficientes ai - a8, [d] calcular, preferentemente por trazado de rayos, por lo menos una propiedad óptica de una lente con dichos valores, [e] calcular el valor de una función de mérito del tipo: $fm = \left[\sum_i \alpha_i m_i^2(\beta)\right]^{1/2}$ donde m_i es el valor de dicha propiedad óptica a un ángulo de vision ß determinado respecto del eje óptico de la lente, y α_i es un valor de ponderación, [f] optimizar dicha función de mérito mediante la fijación de nuevos valores nominales para dichos coeficientes $a_1 – a_8$, y [g] repetición de los pasos [c] a [f] hasta la obtención del nivel de optimización deseado	No menciona	Los coeficientes se calculan mediante un cálculo iterativo que comprende las siguientes etapas: [a] fijar un valor para el indice de refracción de la lente oftálmica y para la curva base que se empleara para fabricar la lente oftálmica, [b] fijar unos valores de esfera, cilindro y eje del cilindro que deberá cumplir la lente oftálmica, [c] fijar unos valores nominales iniciales para los coeficientes ai - a8, [d] calcular, preferentemente por trazado de rayos, por lo menos una propiedad óptica de una lente con dichos valores, [e] calcular el valor de una función de mérito del tipo: $fm = \left[\sum_i \alpha_i m_i^2(\beta)\right]^{1/2}$ donde m_i es el valor de dicha propiedad óptica a un ángulo de vision ß determinado respecto del eje óptico de la lente, y α_i es un valor de ponderación, [f] optimizar dicha función de mérito mediante la fijación de nuevos valores nominales para dichos coeficientes $a_1 – a_8$, y [g] repetición de los pasos [c] a [f] hasta la obtención del nivel de optimización deseado (Figs. 6A-6C; Col. 17, línea 30 a Col. 20, línea 2).

Los documentos D1 y D2 se consideran el estado de la técnica cercano a la invención definida en la reivindicación 2 porque divulgan un método para producir un lente de contacto tórico en el caso de D1, y para D2 un método para diseñar y fabricar un lente oftálmico personalizado.

La diferencia entre la invención, definida en la reivindicación 2 y un método para producir

Superintendencia de Industria y Comercio: Cra 13 No. 27-00 pisos 1, 3, 4, 5, 6, 7 y 10 - PBX: (571) 5870000
E-mail: contactenos@sic.gov.co - Bogotá D.C., Colombia.
Señor ciudadano la entidad le ofrece los siguientes canales para hacer seguimiento a su solicitud así:
Página web: www.sic.gov.co
Centro de atención telefónica en Bogotá: 5920400
Línea gratuita a nivel nacional: 018000 910165
Kiosco Informático Centro Comercial Gran Estación en Bogotá
MINCOMERCIO INDUSTRIA Y TURISMO

un lente de contacto tórico de D1, consiste en que D1 no divulga que los coeficientes se calculan mediante un cálculo iterativo que comprende las siguientes etapas: [a] fijar un valor para el índice de refracción de la lente oftálmica y para la curva base que se empleara para fabricar la lente oftálmica, [b] fijar unos valores de esfera, cilindro y eje del cilindro que deberá cumplir la lente oftálmica, [c] fijar unos valores nominales iniciales para los coeficientes ai - a8, [d] calcular, preferentemente por trazado de rayos, por lo menos una propiedad óptica de una lente con dichos valores, [e] calcular el valor de una función de mérito del tipo: $fm = \left[\sum_i \alpha_i m_i^2(\beta)\right]^{1/2}$ donde mi es el valor de dicha propiedad óptica a un ángulo de visión ß determinado respecto del eje óptico de la lente, y αi es un valor de ponderación, [f] optimizar dicha función de mérito mediante la fijación de nuevos valores nominales para dichos coeficientes a1 – a8, y [g] repetición de los pasos [c] a [f] hasta la obtención del nivel de optimización deseado.

La diferencia entre la invención, definida en la reivindicación 2 y un método para diseñar y fabricar un lente oftálmico personalizado de D2, consiste en que D2 no divulga el tipo de función analítica utilizada en la superficie del lente.

El efecto que logra el incluir que los coeficientes se calculan mediante un cálculo iterativo que comprende las siguientes etapas: [a] fijar un valor para el índice de refracción de la lente oftálmica y para la curva base que se empleara para fabricar la lente oftálmica, [b] fijar unos valores de esfera, cilindro y eje del cilindro que deberá cumplir la lente oftálmica, [c] fijar unos valores nominales iniciales para los coeficientes ai - a8, [d] calcular, preferentemente por trazado de rayos, por lo menos una propiedad óptica de una lente con dichos valores, [e] calcular el valor de una función de mérito del tipo: $fm = \left[\sum_i \alpha_i m_i^2(\beta)\right]^{1/2}$ donde mi es el valor de dicha propiedad óptica a un ángulo de visión ß determinado respecto del eje óptico de la lente, y αi es un valor de ponderación, [f] optimizar dicha función de mérito mediante la fijación de nuevos valores nominales para dichos coeficientes a1 – a8, y [g] repetición de los pasos [c] a [f] hasta la obtención del nivel de optimización deseado, es que proveería un método de diseño de lentes más optimizado y preciso.

Por lo tanto, el problema técnico objetivo que pretende resolver esta invención se puede formular así: ¿Cómo modificar un método para producir un lente de contacto tórico, conocido en D1 para proveer un método de diseño de lentes más optimizado y preciso?

Sin embargo, la utilización de incluir que los coeficientes se calculan mediante un cálculo iterativo que comprende las siguientes etapas: [a] fijar un valor para el índice de refracción de la lente oftálmica y para la curva base que se empleara para fabricar la lente oftálmica, [b] fijar unos valores de esfera, cilindro y eje del cilindro que deberá cumplir la lente oftálmica, [c] fijar unos valores nominales iniciales para los coeficientes ai - a8, [d] calcular, preferentemente por trazado de rayos, por lo menos una propiedad óptica de una lente con dichos valores, [e] calcular el valor de una función de mérito del tipo: $fm = \left[\sum_i \alpha_i m_i^2(\beta)\right]^{1/2}$ donde mi es el valor de dicha propiedad óptica a un ángulo de visión ß determinado respecto del eje óptico de la lente, y αi es un valor de ponderación, [f] optimizar dicha función de mérito mediante la fijación de nuevos valores nominales para dichos coeficientes a1 – a8, y [g] repetición de los pasos [c] a [f] hasta la obtención del nivel de optimización deseado, ya está divulgada en el documento D2 que se refiere a un método para diseñar y fabricar un lente oftálmico personalizado donde divulga que los coeficientes se calculan mediante un cálculo iterativo que comprende las siguientes

Superintendencia de Industria y Comercio: Cra 13 No. 27-00 pisos 1, 3, 4, 5, 6, 7 y 10 - PBX: (571) 5870000
E-mail: contactenos@sic.gov.co - Bogotá D.C., Colombia.
Señor ciudadano la entidad le ofrece los siguientes canales para hacer seguimiento a su solicitud así:
Página web: www.sic.gov.co | Línea gratuita a nivel nacional: 018000 910165
Centro de atención telefónica en Bogotá: 5920400 | Kiosco Informático Centro Comercial Gran Estación en Bogotá
MINCOMERCIO INDUSTRIA Y TURISMO

etapas: [a] fijar un valor para el índice de refracción de la lente oftálmica y para la curva base que se empleara para fabricar la lente oftálmica, [b] fijar unos valores de esfera, cilindro y eje del cilindro que deberá cumplir la lente oftálmica, [c] fijar unos valores nominales iniciales para los coeficientes ai - a8, [d] calcular, preferentemente por trazado de rayos, por lo menos una propiedad óptica de una lente con dichos valores, [e] calcular el valor de una función de mérito del tipo: $fm = \left[\sum_i \alpha_i m_i^2(\beta)\right]^{1/2}$ donde mi es el valor de dicha propiedad óptica a un ángulo de visión ß determinado respecto del eje óptico de la lente, y αi es un valor de ponderación, [f] optimizar dicha función de mérito mediante la fijación de nuevos valores nominales para dichos coeficientes a1 – a8, y [g] repetición de los pasos [c] a [f] hasta la obtención del nivel de optimización deseado (Figs. 6A-6C; Col. 17, línea 30 a Col. 20, línea 2).

En consecuencia, la persona del oficio normalmente versada en la materia, incluiría que los coeficientes se pueden calcular mediante un cálculo iterativo que comprende las siguientes etapas: [a] fijar un valor para el índice de refracción de la lente oftálmica y para la curva base que se empleara para fabricar la lente oftálmica, [b] fijar unos valores de esfera, cilindro y eje del cilindro que deberá cumplir la lente oftálmica, [c] fijar unos valores nominales iniciales para los coeficientes ai - a8, [d] calcular, preferentemente por trazado de rayos, por lo menos una propiedad óptica de una lente con dichos valores, [e] calcular el valor de una función de mérito del tipo: $fm = \left[\sum_i \alpha_i m_i^2(\beta)\right]^{1/2}$ donde mi es el valor de dicha propiedad óptica a un ángulo de visión ß determinado respecto del eje óptico de la lente, y αi es un valor de ponderación, [f] optimizar dicha función de mérito mediante la fijación de nuevos valores nominales para dichos coeficientes a1 – a8, y [g] repetición de los pasos [c] a [f] hasta la obtención del nivel de optimización deseado de D2 en el método de D1 para llegar así al objeto de la reivindicación 2 de la solicitud. Por lo cual se considera obvia.

8. Conclusión

Los requisitos de patentabilidad de la presente solicitud están afectados de acuerdo a las objeciones en el numeral 5, y así:

Ítem	Documento	Reivindicaciones afectadas	Requisito que afecta
D1	US 2008/0013043	1, 5, 6, y 10 a 14 2	Novedad/nivel inventivo Nivel inventivo
D2	US 7,111,938	2	Nivel inventivo

Superintendencia de Industria y Comercio: Cra 13 No. 27-00 pisos 1, 3, 4, 5, 6, 7 y 10 - PBX: (571) 5870000
E-mail: contactenos@sic.gov.co - Bogotá D.C., Colombia.
Señor ciudadano la entidad le ofrece los siguientes canales para hacer seguimiento a su solicitud así:
Página web: www.sic.gov.co
Línea gratuita a nivel nacional: 018000 910165
Centro de atención telefónica en Bogotá: 5920400
Kiosco Informático Centro Comercial Gran Estación en Bogotá
MINCOMERCIO INDUSTRIA Y TURISMO

En cumplimiento del artículo 45 de la Decisión 486 de la Comisión de la Comunidad Andina, se le indica que debe dar respuesta dentro del término de sesenta (60) días contados a partir del día siguiente de la fecha de notificación de la presente comunicación. En caso de no dar respuesta al presente requerimiento, o si a pesar de la respuesta subsistieran los impedimentos para la concesión, se denegará la patente.

Se invita al solicitante se sirva indicar, si así lo considera, su renuncia al término faltante de sesenta (60) días para dar respuesta a este requerimiento y presentarla por escrito.

Finalmente, se le recuerda al solicitante que si como respuesta a este requerimiento llegara a modificar el capítulo reivindicatorio y éste contenga más de diez (10) reivindicaciones, no pagará la tasa de modificación voluntaria pero sí la correspondiente al pago por reivindicación adicional.

Notifíquese el presente oficio conforme a lo dispuesto en el numeral 5.2, literal e), del capítulo quinto del título primero de la Circular Única No. 10 de 2001.

JOSÉ LUIS SALAZAR LÓPEZ
Director de Nuevas Creaciones (c)

El anterior requerimiento fue notificado por fijación en lista, de fecha 2015-11-03

Elaboró: John Fernando Ramirez Gomez
Revisó: Rachid Ponce Vergel

Superintendencia de Industria y Comercio: Cra 13 No. 27- 00 pisos 1, 3, 4, 5, 6, 7 y 10 - PBX: (571) 5870000
E-mail: contactenos@sic.gov.co - Bogotá D.C., Colombia.
Señor ciudadano la entidad le ofrece los siguientes canales para hacer seguimiento a su solicitud así:
Página web: www.sic.gov.co
Centro de atención telefónica en Bogotá: 5920400
Línea gratuita a nivel nacional: 018000 910165
Kiosco Informático Centro Comercial Gran Estación en Bogotá
MINCOMERCIO INDUSTRIA Y TURISMO

John

Search history

Search 1:	TAC=(MONOFOCAL~ AND OPHTHALMIC~ AND LENS~ AND SURFACE~ AND ANALYTICAL~ AND FUNCTION~ AND HYPERBOLIC~ AND EXPONENTIAL~ AND ASTIGMATISM~) (Results 1)
Search 2:	FT=(MONOFOCAL~ AND OPHTHALMIC~ AND LENS~ AND SURFACE~ AND ANALYTICAL~ AND FUNCTION~ AND HYPERBOLIC~ AND EXPONENTIAL~ AND ASTIGMATISM~) (Results 1)
Search 3:	FT=(MONOFOCAL~ AND OPHTHALMIC~ AND LENS~ AND SURFACE~ AND HYPERBOLIC~ AND EXPONENTIAL~ AND ASTIGMATISM~) (Results 2)
Search 4:	FT=(MONOFOCAL~ AND OPHTHALMIC~ AND LENS~ AND SURFACE~ AND ZERNIKE~ AND ASTIGMATISM~) (Results 34)

1) Family number: 29983053 (US2004075807A)

© PatBase

Title: JUNCTIONLESS OPHTHALMIC LENSES AND METHODS FOR MAKING SAME

Abstract: Source: US2004075807A Methods for producing a junctionless ophthalmic lens are provided. Additionally, ophthalmic lenses having junctionless, three dimensional surfaces, for example, asymmetrical anterior and/or posterior surfaces, as well as molding tools used in the production of such lenses, are also provided. The method generally include providing sample data points to define a surface contour, and interpolating between these data points using an algorithm to produce a simulated three dimensional surface. The simulated three dimensional surface is used in producing an ophthalmic lens, for example, in cast molding a contact lens.

Classifications:

International (IPC 8-9): A61B18/18 A61F2/16 A61F9/007 A61F9/01 B29C39/02 B29C39/44 B29D11/00 C08G77/16 G02B1/04 G02C7/04 G02C7/06 (Advanced/Invention);
B29L11/00 G02C7/04 (Advanced/Non-invention);
A61B18/18 (Core/Invention);
B29D11/00 G02C7/04 (Core/Non-invention);
G02C (Subclass/Invention)

International (IPC 1-7): A61B18/18 A61F2/16 A61F9/007 A61F9/01 B29C39/02 B29C39/44 B29D11/00 B29L11/00 G02C G02C0/00 G02C7/02 G02C7/04 G02C7/06

CPC: B29D11/00432 G02C7/04 G02C7/028 G02C7/043 G02C7/048 G02C2202/22

European: B29D11/00C22 G02C7/02D6 G02C7/04 G02C7/04B4 G02C7/04H S02C202/22

US: 351/159 351/159.02 351/159.020P 351/159.38 351/159.380P 351/159.74 351/159S 351/160 351/160.00R 351/160H 351/160R 351/161 351/161S 351/168 351/168S 351/177

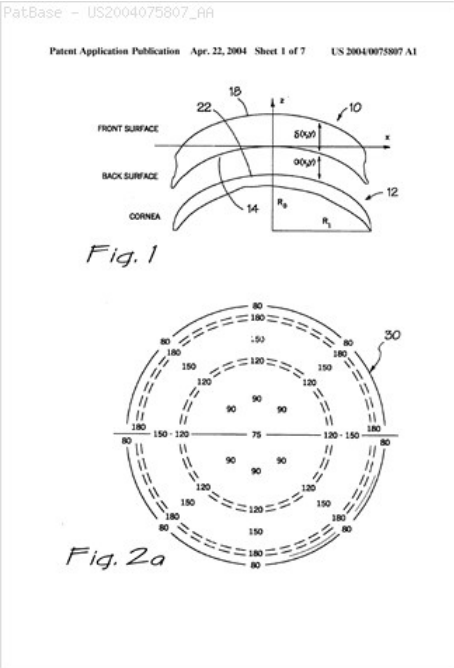

Family:

Publication number	Publication date	Application number	Application date
AU2001297634 AA	20020919	AU20010297634	20011107
BRPI0115268 A	20030812	BR2001PI15268	20011107
BRPI0412802 A	20060926	BR2004PI12802	20040608
CA2428506 AA	20030509	CA20012428506	20011107
CA2428506 C	20091027	CA20012428506	20011107
CA2533304 AA	20060117	CA20042533304	20040608
CA2533304 C	20100803	CA20042533304	20040608
CN100504510 C	20090624	CN20018021905	20011107
CN1500225 A	20040526	CN20018021905	20011107
CN1856729 A	20061101	CN200480027276	20040608
EP1340114 A1	20030903	EP20010273936	20011107
EP1340114 A4	20050302	EP20010273936	20011107
EP1654580 A2	20060510	EP20040754828	20040608
EP1654580 A4	20061004	EP20040754828	20040608
HK1058829 A3	20040604	HK20040101586	20040303
HK1098201 A3	20070713	HK20070104348	20070424
IN00548CN2006 A	20070622	IN2006CN00548	20060214
IN00820CN2003 A	20050422	IN2003CN00820	20030527
IN01951CN2007 A	20080627	IN2007CN01951	20070507
IN230539 B	20090327	IN2003CN00820	20030527
JP2004519717 T2	20040702	JP20020569989T	20011107
JP2006528373 T2	20061214	JP20060521063T	20040608
KR20030045176 A	20030609	KR20037006286	20030509
KR20060039919 A	20060509	KR20067001351	20060120
KR20090073259 A	20090702	KR20097012323	20040608
MXPA03004041 A1	20030904	MX2003PA04041	20030508
MXPA06000769 A1	20060418	MX2006PA00769	20060120
TW200527033 A	20050816	TW20040121774	20040721
TWI243923 B	20051121	TW20010127892	20011109
TWI330724 B	20100921	TW20040121774	20040721
US2004075807 AA	20040422	US20030624086	20030721
US2006203189 AA	20060914	US20060421225	20060531
US6595639 BA	20030722	US20000709132	20001110
US7152975 BB	20061226	US20030624086	20030721
US7828431 BB	20101109	US20060421225	20060531
WO02071130 A1	20020912	WO2001US51242	20011107
WO05015289 A2	20050217	WO2004US18334	20040608
WO05015289 A3	20050414	WO2004US18334	20040608

Priority:

US20000709132 20001110 WO2001US51242 20011107 US20030624086 20030721
WO2004US18334 20040608 US20060421225 20060531

Probable Assignee: COOPERVISION INT HOLDING CO LP

Assignee(s): (std): BACK ARTHUR ; COOPER VISION INC ; COOPERVISION INT HOLDING CO LP ; OCULAR SCIENCES INC ; HO ARTHUR ; COOPERVISION INC

Assignee(s): COOPERVISION INT ; KEYBANK NATIONAL ASSOCIATION ; TCC ACQUISITION CORP ; COOPERVISION INTERNATIONAL HOLDING COMPANY LP ; COOPERVISION INTERNATIONAL HOLDING COMPANY LPGB ; COOPER VISION INTERNATIONAL HOLDING COMPANY LP

Inventor(s): (std): A BACK ; A HO ; ARTHUR BACK ; ARTHUR HO ; BACK ARTHUR ; HO ARTHUR

Inventor(s):	HO ARTHUR BACK ARTHUR
Agent(s):	BORDEN LADNER GERVAIS LLP; FRANK J UXA; STOUT UXA BUYAN AND MULLINS LLP; GREG S; FRANK J; STOUT UXA BUYAN AND MULLINS
Designated states:	AE AG AL AM AT AU AZ BA BB BE BF BG BJ BR BW BY BZ CA CF CG CH CI CM CN CO CR CU CY CZ DE DK DM DZ EC EE EG ES FI FR GA GB GD GE GH GM GN GQ GR GW HR HU ID IE IL IN IS IT JP KE KG KP KR KZ LC LI LK LR LS LT LU LV MA MC MD MG MK ML MN MR MW MX MZ NA NE NI NL NO NZ OM PG PH PL PT RO RU SC SD SE SG SI SK SL SN SY SZ TD TG TJ TM TN TR TT TZ UA UG US UZ VC VN YU ZA ZM ZW

2) Family number: 30463522 (US2005080484A)

© PatBase

Title: DEVICES AND METHODS FOR IMPROVING VISION

Abstract: Source: US2005080484A A corneal appliance that is placed over an eye has a lens body and epithelial cells secured over the lens body. The epithelial cells of the appliance may be derived from cultured cells, including stem cells, such as limbal stem cells, or epithelial cell lines, or may include at least a portion of the epithelium of the eye on which the appliance is placed. The corneal appliance may have a cellular attachment element between the lens body and the epithelial cells to facilitate attachment of the epithelial cells over the lens body. The corneal appliance is intended to be used on a deepithelialized eye, which may be an eye that has had the epithelium fully or partially removed. The corneal appliance may be used to improve vision. Methods of producing the corneal appliance and of improving vision are also disclosed.

Classifications:
International (IPC 8-9): A61F2/14 A61F9/00 A61F9/007 A61F9/013 A61L27/00 A61L27/38 (Advanced/Invention);
A61F2/14 (Advanced/Non-invention)
International (IPC 1-7): A61F2/14 A61F9/007
CPC: Y10S623/906 A61L27/3813 A61F9/0017 A61F9/013 A61L27/3604 A61L27/3641 A61L27/3839 A61L27/3895 A61L2430/16 A61F2/1453
European: A61F2/14 A61F2/14E A61F9/00B2 A61F9/013 A61L27/36B A61L27/36F A61L27/38B4 A61L27/38D A61L27/38H K61L430/16
US: 623/5.11 623/5.110P 623/5.14 623/5.140P 623/5.16 623/5.160S 623/906

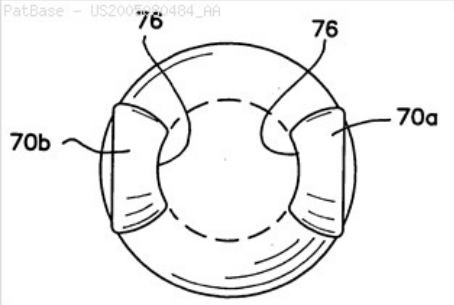

Family:

Publication number	Publication date	Application number	Application date
AU2003270593 AA	20040430	AU20030270593	20030902
BRPI0314266 A	20050726	BR2003PI14266	20030902
CA2498717 AA	20050311	CA20032498717	20030902
CN1694658 A	20051109	CN20038025056	20030902
EP1549255 A1	20050706	EP20030752298	20030902
EP1549255 A4	20071219	EP20030752298	20030902
HK1085113 A3	20060818	HK20060105307	20060504
IN00582CN2005 A	20070824	IN2005CN00582	20050408
IN227367 B	20090213	IN2005CN00582	20050408
JP2006508709 T2	20060316	JP20040536187T	20030902
KR20050042819 A	20050510	KR20057004372	20050314
MXPA05002669 A1	20050819	MX2005PA02669	20050310
TW200420275 A	20041016	TW20030125287	20030912
US2005080484 AA	20050414	US20030661400	20030912
US2006241751 AA	20061026	US20060427293	20060628
US7828844 BB	20101109	US20030661400	20030912
WO04024035 A1	20040325	WO2003US28657	20030902

Priority:

US20020410837 20020913 US20020410837P 20020913 US20030464004P 20030418
US20030661400 20030912 US20060427293 20060628 US20030464590P 20030421
WO2003US28657 20030902

Probable Assignee: FORSIGHT LABS LLC

Assignee(s): (std)**:** BACK ARTHUR ; COOPERVISION INC ; FORSIGHT LABS LLC ; OCULAR SCIENCES INC ; MARMO J C

Assignee(s): TCC ACQUISITION CORP ; KEYBANK NATIONAL ASSOCIATION ; MARMO CHRISTOPHER J

Inventor(s): (std)**:** ARTHUR BACK ; BACK ARTHUR ; CHRISTOPHER J MARMO ; HOLLRIGEL GREG S ; MARMO CHRISTOPHER J ; MARMO J C ; MARMO J CHRISTOPHER ; ARTHUR MARMO J CHRISTOPHER BAC

Inventor(s): MARMO J CHRISTOPHER BACK ARTHUR ; MARMO J

Agent(s): BORDEN LADNER GERVAIS LLP; STOUT UXA BUYAN AND MULLINS LLP; FRANK J UXA; TOWNSEND AND TOWNSEND AND CREW LLP

Designated states: AE AG AL AM AT AU AZ BA BB BE BF BG BJ BR BY BZ CA CF CG CH CI CM CN CO CR CU CY CZ DE DK DM DZ EC EE EG ES FI FR GA GB GD GE GH GM GN GQ GR GW HR HU ID IE IL IN IS IT JP KE KG KP KR KZ LC LI LK LR LS LT LU LV MA MC MD MG MK ML MN MR MW MX MZ NE NI NL NO NZ OM PG PH PL PT RO RU SC SD SE SG SI SK SL SN SY SZ TD TG TJ TM TN TR TT TZ UA UG UZ VC VN YU ZA ZM ZW

3) Family number: 30606276 (US2004156014A)

Title: MULTIFOCAL OPHTHALMIC LENS

Abstract: Source: US2004156014A A method of designing a multifocal ophthalmic lens with one base focus and at least one additional focus, capable of reducing aberrations of the eye for at least one of the foci after its implantation, comprising the steps of: (i) characterizing at least one corneal surface as a mathematical model; (ii) calculating the resulting aberrations of said corneal surface(s) by employing said mathematical model; (iii) modelling the multifocal ophthalmic lens such that a wavefront arriving from an optical system comprising said lens and said at least one corneal surface obtains reduced aberrations for at least one of the foci. There is also disclosed a method of selecting a multifocal intraocular lens, a method of designing a multifocal ophthalmic lens based on corneal data from a group of patients, and a multifocal ophthalmic lens.

Classifications:
International (IPC 8-9): A61B3/10 A61F2/14 A61F2/16 A61L27/00 G01J9/00 G02B5/18 G02C13/00 G02C7/02 G02C7/04 G02C7/06 (Advanced/Invention)
International (IPC 1-7): A61F2/14 A61F2/16 G01J9/00 G02B5/18 G02C7/02 G02C7/04 G02C7/06
CPC: G02C7/042 G02C7/044 A61F2/1637 A61F2240/001 A61F2/164 G02C7/041 A61B3/0025 A61F2/1618 A61F2/1654 G01J9/00 G02C7/028 G02C7/06 G02C2202/20 G02C2202/22 A61F2002/164 A61F2240/002
European: A61B3/00C1 A61F2/16 A61F2/16B A61F2/16B10 A61F2/16B2F G01J9/00 G02C7/02D6 G02C7/04B G02C7/04B2 G02C7/04B6 G02C7/06 K61F2/16B2F K61F2/16B6 K61F2/16B6A K61F240/00M S02C202/20 S02C202/22
US: 351/159 351/159.05 351/159.050P 351/159.41 351/159.410P 351/159.410S 351/159.74 351/159.79 351/159.790P 351/159S 351/161 351/161P 351/164 351/168 351/168P 351/177 351/177P 623/6.11 623/6.24 623/6.27 623/6.3 623/6.300P

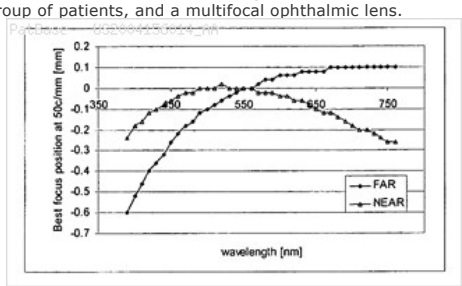

Family:

Publication number	Publication date	Application number	Application date
AT432674 E	20090615	AT20030078764T	20031127
AU2003300516 AA	20040623	AU20030300516	20031127
AU2003300516 BB	20090806	AU20030300516	20031127
CA2507659 AA	20050527	CA20032507659	20031127
CA2507659 AA	20040617	CA20032507659	20031127
CA2507659 C	20120313	CA20032507659	20031127
CA2763036 AA	20040617	CA20032763036	20031127
CA2763036 C	20150317	CA20032763036	20031127
DE60327830 D1	20090716	DE20036027830	20031127
EP1424049 A1	20040602	EP20030078764	20031127
EP1424049 B1	20090603	EP20030078764	20031127
EP2113226 A1	20091104	EP20090161653	20031127
EP2113226 B1	20120725	EP20090161653	20031127
EP2363097 A1	20110907	EP20100183617	20031127
EP2363097 B1	20120926	EP20100183617	20031127
ES2325988 T3	20090928	ES20030078764T	20031127
JP2006519031 T2	20060824	JP20040556288T	20031127
JP2010152388 A2	20100708	JP20100039912	20100225
SE200203564 A0	20021129	SE20020003564	20021129
TW200426424 A	20041201	TW20030133613	20031128
TWI338166 B	20110301	TW20030133613	20031128
US2004156014 AA	20040812	US20030724852	20031201
US2006244905 AA	20061102	US20060426187	20060623
US2006244906 AA	20061102	US20060426196	20060623
US2007188700 AA	20070816	US20070734238	20070411
US2008198326 AA	20080821	US20080055588	20080326
US2012029630 AA	20120202	US20110015702	20110128
US2013345806 AA	20131226	US20130014676	20130830
US2015094807 AA	20150402	US20140563791	20141208
US7377640 BB	20080527	US20060426187	20060623
US7377641 BB	20080527	US20060426196	20060623
US7543937 BB	20090609	US20080055588	20080326
US7670371 BB	20100302	US20070734238	20070411
US7896916 BB	20110301	US20030724852	20031201
US8529623 BB	20130910	US20110015702	20110128
US8906089 BB	20141209	US20130014676	20130830
WO04049979 A1	20040617	WO2003EP13683	20031127

Priority:

SE20020003564	20021129	US20020430515P	20021203	EP20030078764	20031127
WO2003EP13683	20031127	JP20040556288	20031127	EP20090161653	20031127
CA20032507659	20031127	US20030724852	20031201	CA20032763036	20031127
US20060426187	20060623	US20060426196	20060623	US20080055588	20080326
US20110015702	20110128	US20070734238	20070411	US20130014676	20130830
CA20122507659	20120117	US20140563791	20141208		

Probable Assignee: AMO GRONINGEN BV

Assignee(s): (std): ADVANCED MEDICAL OPTICS INC ; AMO GRONINGEN B V ; AMO GRONINGEN BV ; PHARMACIA GRONINGEN BV ; PIERS PATRICIA ANN ; NORRBY SVERKER ; PHARMACIA GRONINGEN B V ; WEEBER HENDRIK A ; PIERS PATRICIA A ; WEEBER HENDRIK ALBERT

Assignee(s): BANK OF AMERICA NA ADMINISTRATIVE AGENT AS ; BANK OF AMERICA NA

Inventor(s): (std): HENDRIK ALBERT WEEBER ; NORRBY SVERKER ; PATRICIA ANN PIERS ; SVERKER NORRBY ; WEEBER ALBERT HENDRIK ; WEEBER HENDRICK A ; WEEBER HENDRIK A ; WEEBER HENDRIK ALBELT ; WEEBER HENDRIK ALBERT ; PIERS PATRICIA A ; PIERS PATRICIA ANN

Inventor(s): WEEBER HENDRIK ; PIERS PATRICIA

Agent(s): DAVIES COLLISON CAVE; GOWLING LAFLEUR HENDERSON LLP; ROSENQUIST PER OLOF ET AL; HOLMBERG MARTIN TOR; ADVANCED MEDICAL OPTICS INC; NEIFELD IP LAW PC; ABBOTT MEDICAL OPTICS INC; AMO GRONINGEN BV

Designated states: AE AG AL AM AT AU AZ BA BB BE BF BG BJ BR BW BY BZ CA CF CG CH CI CM CN CO CR CU CY CZ DE DK DM DZ EC EE ES FI FR GA GB GD GE GH GM GN GQ GR GW HR HU ID IE IL IN IS IT JP KE KG KP KR KZ LC LI LK LR LS LT LU LV MA MC MD MG MK ML MN MR MW MX MZ NE NI NL NO NZ OM PG PH PL PT RO RU SC SD SE SG SI SK SL SN SY SZ TD TG TJ TM TN TR TT TZ UA UG US UZ VC VN YU ZA ZM ZW

4) Family number: 30623082 (US2004106992A)

Title: MULTI-ZONAL MONOFOCAL INTRAOCULAR LENS FOR CORRECTING OPTICAL ABERRATIONS

Abstract: Source: US2004106992A A multi-zonal monofocal opthalmic lens comprises an inner zone, an intermediate zone, and an outer zone. The inner zone has a first optical power. The intermediate zone surrounds the inner zone and has a second optical power that is different from the first power by a magnitude that is less than at least about 0.75 Diopter. The outer zone surrounds the intermediate zone and has a third optical power different from the second optical power. In certain embodiments, the third optical power is equal to the first optical power.

Classifications:
International (IPC 8-9): A61F2/16 A61F9/007 G02C7/02 (Advanced/Invention); A61F2/16 (Core/Invention)
International (IPC 1-7): A61F2/16
CPC: A61F2/1618 A61F2/1637
European: A61F2/16B2F K61F2/16B6
US: 623/6.23 623/6.230P 623/6.24 623/6.28 623/6.280P 623/6.31 623/6.310S 623/901 623/901S

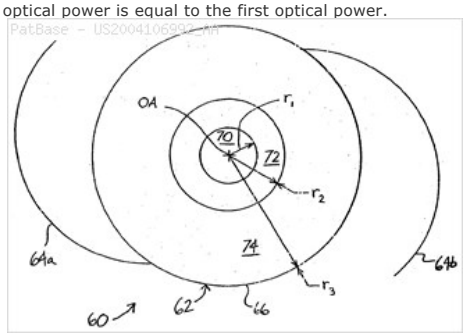

Family:

Publication number	Publication date	Application number	Application date
AT480201 E	20100915	AT20040800995T	20041110
AU2004289324 AA	20050526	AU20040289324	20041110
AU2004289324 BB	20100520	AU20040289324	20041110
AU2010201719 AA	20100520	AU20100201719	20100429
AU2010201719 BB	20110707	AU20100201719	20100429
AU2010212408 AA	20100909	AU20100212408	20100817
AU2010212408 BB	20130704	AU20100212408	20100817
AU2010212408 BI	20130801	AU20100212408	20100817
BRPI0416369 A	20070313	BR2004PI16369	20041110
CA2545184 AA	20060508	CA20042545184	20041110
CA2545184 C	20120925	CA20042545184	20041110
CA2787997 AA	20050526	CA20042787997	20041110
CA2787997 C	20150203	CA20042787997	20041110
DE602004029074 D1	20101021	DE200460029074T	20041110
EP1682046 A2	20060726	EP20040800995	20041110
EP1682046 B1	20100908	EP20040800995	20041110
EP1785106 A1	20070516	EP20070001027	20041110
EP1785106 B1	20141022	EP20070001027	20041110
EP2255752 A2	20101201	EP20100169649	20041110
EP2255752 A3	20110216	EP20100169649	20041110
JP2007510521 T2	20070426	JP20060539865T	20041110
JP2011041826 A2	20110303	JP20100242044	20101028
JP4808159 B2	20111102	JP20060539865T	20041110
JP5352564 B2	20131127	JP20100242044	20101028
US2004106992 AA	20040603	US20030705548	20031110
US2006212117 AA	20060921	US20060439678	20060523
US7381221 BB	20080603	US20030705548	20031110
US8486141 BB	20130716	US20060439678	20060523
WO05046527 A2	20050526	WO2004US37684	20041110
WO05046527 A3	20050909	WO2004US37684	20041110

Priority:

US20020424851P	20021108	US20030705548	20031110	WO2004US37684	20041110
US20060439678	20060523	EP20040800995	20041110	AU20040289324	20041110
JP20060539865	20041110	CA20042545184	20041110	CA20042787997	20041110
AU20100201719	20100429	AU20100212408	20100817	CA20122545184	20120911

Probable Assignee: ABBOTT MEDICAL OPTICS INC

Assignee(s): (std): ABBOTT MEDICAL OPTICS INC ; ADVANCED MEDICAL OPTICS INC ; LANG ALAN J ; ZHAO HUAWEI

Assignee(s): BANK OF AMERICA NA ; BANK OF AMERICA NA ADMINISTRATIVE AGENT AS ; ADVANCED MEDICAL OPTICS

Inventor(s): (std): ALAN J LANG ; HUAWEI ZHAO ; LANG ALAN J ; ZHAO HUAWEI ; LANG ALAN

Agent(s): DAVIES COLLISON CAVE; GOWLING LAFLEUR HENDERSON LLP; HOFFMANN EITLE; ADVANCED MEDICAL OPTICS INC; ABBOTT MEDICAL OPTICS INC

Designated states: AE AG AL AM AT AU AZ BA BB BE BF BG BJ BR BW BY BZ CA CF CG CH CI CM CN CO CR CU CY CZ DE DK DM DZ EC EE EG ES FI FR GA GB GD GE GH GM GN GQ GR GW HR HU ID IE IL IN IS IT JP KE KG KP KR KZ LC LI LK LR LS LT LU LV MA MC MD MG MK ML MN MR MW MX MZ NA NE NI NL NO NZ OM PG PH PL PT RO RU SC SD SE SG SI SK SL SN SY SZ TD TG TJ TM TN TR TT TZ UA UG US UZ VC VN YU ZA ZM ZW

5) Family number: 40968397 (US2007002444A)

Title: OPHTHALMIC LENSES CAPABLE OF REDUCING CHROMATIC ABERRATION

Abstract: Source: US2007002444A A method of designing an aspheric ophthalmic lens with both refractive and diffractive powers that is capable of reducing chromatic aberration and at least one monochromatic aberration of an eye comprises combining aspherical refractive and diffractive surfaces, selecting an appropriate eye model, establishing a design lens having at least one aspheric surface with a capacity to reduce monochromatic aberration in said eye model, establishing a diffractive lens element that corrects for chromatic aberration of the model eye; and adjusting the lens surface design in order to obtain a suitably high polychromatic image quality in a form that is weighted to comply with a spectral merit function.

Classifications:
International (IPC 8-9): A61F2/16 G02B27/00 G02B27/44 G02B3/04 G02B5/18 G02C7/02 G02C7/04 G02C7/10 (Advanced/Invention);
A61F2/16 G02B27/00 G02B27/42 G02B3/02 G02B5/18 G02C7/00 G02C7/02 G02C7/04 (Core/Invention)
International (IPC 1-7): A61F2/16 G02B27/00 G02B5/18 G02C7/02
CPC: G02C2202/20 G02C7/02 A61F2/16 A61F2/1613 G02B3/04 G02B5/1814 G02B27/0012 G02B27/0037 G02B27/4211 G02C7/027 G02C7/028 G02C2202/22
European: A61F2/16 A61F2/16B G02B27/00D G02B27/00K2 G02B27/42A1 G02B3/04 G02C7/02 G02C7/02D4 G02C7/02D6 G02C7/10 S02B5/18E
US: 351/159 351/159.74 351/175 351/177 359/565 359/565P 623/6.3 623/6.31

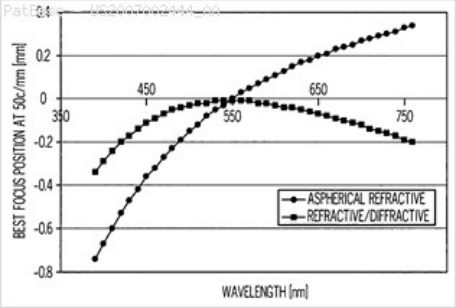

Family:

Publication number	Publication date	Application number	Application date
AU2005230194 AA	20051020	AU20050230194	20050405
AU2005230194 BB	20101216	AU20050230194	20050405
BRPI0509623 A	20070918	BR2005PI09623	20050405
CA2562268 AA	20061004	CA20052562268	20050405
CA2562268 C	20141202	CA20052562268	20050405
EP1866693 A1	20071219	EP20050732657	20050405
EP1866693 B1	20130508	EP20050732657	20050405
JP2007531610 T2	20071108	JP20070507483T	20050405
JP4860602 B2	20120125	JP20070507483T	20050405
US2007002444 AA	20070104	US20050099342	20050405
US7677725 BB	20100316	US20050099342	20050405
WO05098518 A1	20051020	WO2005US11701	20050405

Priority:

US20040559472P 20040405 US20050099342 20050405 WO2005US11701 20050405
US20050559472P 20050405

Probable Assignee: AMO GRONINGEN

Assignee(s): (std): AMO GRONINGEN B V ; PIERS PATRICIA ; WEEBER HENK ; PIERS PATRICIA ANN ; AMO GRONINGEN BV ; ADVANCED MEDICAL OPTICS INC

Assignee(s): ADVANCED MEDICAL OPTICS INC1700 E. ST. ANDREW PLACESANTA ANACA92705US ; AMO GRONINGEN ; AMO GRONINGEN BVVAN SWIETENLAAN 5NL-9728 NXGRONINGENNL

Inventor(s): (std): WEEBER HENK ; PIERS PATRICIA ANN ; PIERS PATRICIA ; PIERS ANN PATRICIA

Inventor(s): PATRICIA ANN PIERS ; HENK WEEBER ; ANN PATRICIA PIERS ; PIERS PATRICIA ANNNL ; WEEBER HENKNL

Agent(s): HOFFMANN EITLE; ADVANCED MEDICAL OPTICS INC

Designated states: AE AG AL AM AT AU AZ BA BB BE BF BG BJ BR BW BY BZ CA CF CG CH CI CM CN CO CR CU CY CZ DE DK DM DZ EC EE EG ES FI FR GA GB GD GE GH GM GN GQ GR GW HR HU ID IE IL IN IS IT JP KE KG KM KP KR KZ LC LI LK LR LS LT LU LV MA MC MD MG MK ML MN MR MW MX MZ NA NE NI NL NO NZ OM PG PH PL PT RO RU SC SD SE SG SI SK SL SM SN SY SZ TD TG TJ TM TN TR TT TZ UA UG US UZ VC VN YU ZA ZM ZW

6) Family number: 32436738 (US2005259221A)

Title: CORNEAL ONLAYS AND WAVEFRONT ABERRATION CORRECTION TO ENHANCE VISION

Abstract: Source: US2005259221A Devices and methods for improving vision are described. The vision of a person can be corrected using a corneal onlay or a lens positioned between an epithelial cell layer and Bowman's membrane of the person's eye. Wavefront aberrations are measured for the person's eye or eyes, and the aberrations are used to shape the corneal onlay to provide a desired vision correction power, or to shape the person's cornea.

Classifications:
International (IPC 8-9): A61B3/00 A61B3/10 A61B3/125 A61F2/14 A61F9/007 B29D11/02 G02C7/04 (Advanced/Invention);
A61B3/00 G02C7/04 (Advanced/Non-invention);
A61F9/007 G02C7/00 (Core/Invention)
International (IPC 1-7): A61F2/14 G02C7/04
CPC: A61B3/1015 A61F2/14 B29D11/023 G02C7/04
European: A61B3/10F A61F2/14 B29D11/02B G02C7/04
US: 351/159.74 351/159.740P 351/160.00R 351/160R 351/205 351/219 351/219P 351/246

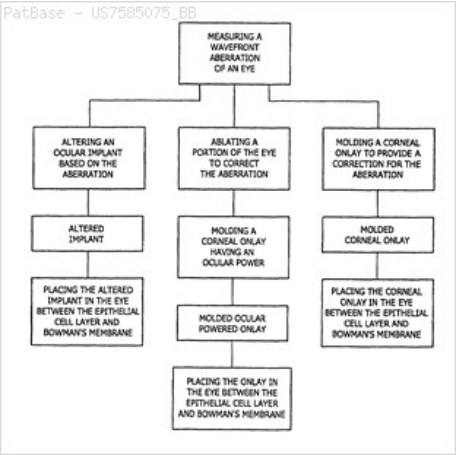

Family:

Publication number	Publication date	Application number	Application date
BRPI0511339 A	20071204	BR2005PI11339	20050513
CA2566961 AA	20061115	CA20052566961	20050513
CN1972643 A	20070530	CN200580016249	20050513
EP1771131 A2	20070411	EP20050748326	20050513
HK1102754 A3	20071207	HK20070111239	20071018
IN04280CN2006 A	20070629	IN2006CN04280	20061120
JP2007537829 T2	20071227	JP20070527312T	20050513
KR20070055422 A	20070530	KR20067026706	20061219
MXPA06013343 A1	20070508	MX2006PA13343	20061117
TW200606484 A	20060216	TW20050116501	20050520
US2005259221 AA	20051124	US20050128824	20050513
US2008024723 AA	20080131	US20070881727	20070727
US7585075 BB	20090908	US20070881727	20070727
WO05116729 A2	20051208	WO2005US16745	20050513
WO05116729 A3	20061214	WO2005US16745	20050513

Priority:
US20040573657P 20040520 WO2005US16745 20050513 US20050128824 20050513 US20070881727 20070727

Probable Assignee: FORSIGHT LABS LLC

Assignee(s): (std): COOPERVISION INC ; COOPERVISION INT HOLDINGS ; COOPERVISION INTERNAT HOLDINGS ; MARMO J CHRISTOPHER ; FORSIGHT LABS LLC

Assignee(s): COOPERVISION INTERNATIONAL HOLDINGS LP ; COOPERVISION INT HOLDINGS LP ; COOPER VISION INC

Inventor(s): (std): MARMO J C ; MARMO J CHRISTOPHER

Inventor(s): J CHRISTOPHER MARMO ; MARMO CHRISTOPHER J ; MARMO J

Agent(s): BORDEN LADNER GERVAIS LLP; STOUT UXA BUYAN AND MULLINS LLP; FRANK J UXA; TOWNSEND AND TOWNSEND AND CREW LLP

Designated states: AE AG AL AM AT AU AZ BA BB BE BF BG BJ BR BW BY BZ CA CF CG CH CI CM CN CO CR CU CY CZ DE DK DM DZ EC EE EG ES FI FR GA GB GD GE GH GM GN GQ GR GW HR HU ID IE IL IN IS IT JP KE KG KM KP KR KZ LC LI LK LR LS LT LU LV MA MC MD MG MK ML MN MR MW MX MZ NA NE NG NI NL NO NZ OM PG PH PL PT RO RU SC SD SE SG SI SK SL SM SN SY SZ TD TG TJ TM TN TR TT TZ UA UG US UZ VC VN YU ZA ZM ZW

7) Family number: 32617741 (US2007197788A)

© PatBase

Title: METHOD FOR THE PREPARATION OF ENANTIOMER FORMS OF CIS-CONFigureD 3-HYDROXYCYCLOHEXANE CARBOXYLIC ACID DERIVATIVES USING HYDROLASES

Abstract: Source: US2007197788A The present invention relates to a process for preparing chiral non-racemic cis-configured cyclohexanols or

(I)

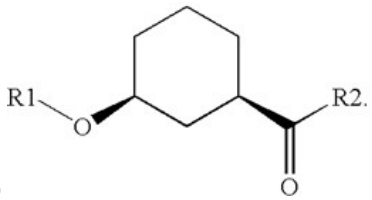

cyclohexanol derivatives of the formula (I) Cis-configured hydroxyl-cyclohexane carboxylic acid derivatives of formula (I) are central building blocks or immediate precursors for the medicinally active compounds which allow a therapeutic modulation of the lipid and/or carbohydrate metabolism and are thus suitable for preventing and/or treating type II diabetes, hyperglycemia and artherosclerosis. The cis-configured hydroxyl-cyclohexane carboxylic acid derivatives of formula (I) are central building blocks or immediate precursors for the medicinally active compounds described in the prior art.

Classifications:

International (IPC 8-9): A61P3/06 A61P3/10 A61P9/10 C07C403/00 C07D263/02 C07D263/32 C07D413/02 C07F7/02 C12P13/02 C12P17/00 C12P17/14 C12P41/00 C12P7/24 C12P7/62 (Advanced/Invention);
A61K31/421 (Advanced/Non-invention);
C07C403/00 C07D413/00 C07F7/00 C12P13/00 C12P17/00 C12P17/14 C12P41/00 C12P7/00 C12P7/24 C12P7/62 (Core/Invention);
C12P (Subclass/Invention)

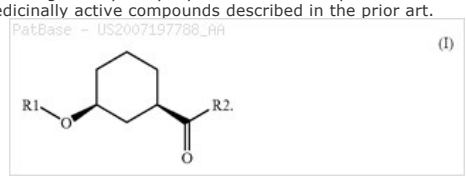

International (IPC 1-7): C12P17/00 C12P41/00 C12P7/24
CPC: C12P7/00 C12P17/00 C12P41/004
European: C12P17/00 C12P41/00C2 C12P7/00
US: 546/14 546/271.4 548/215

Family:

Publication number	Publication date	Application number	Application date
AR050100 AA	20060927	AR2005P103251	20050804
AT428795 E	20090515	AT20050778085T	20050723
AU2005270447 AA	20060216	AU20050270447	20050723
CA2576080 AA	20070206	CA20052576080	20050723
CN1989253 A	20070627	CN200580025307	20050723
DE102004038403 A1	20060223	DE200410038403	20040807
DE102004038403 B4	20060831	DE200410038403	20040807
DE502005007103 D1	20090528	DE200550007103T	20050723
DK1805316 T3	20090810	DK20050778085T	20050723
EP1805316 A2	20070711	EP20050778085	20050723
EP1805316 B1	20090415	EP20050778085	20050723
ES2324945 T3	20090820	ES20050778085T	20050723
HK1104579 A3	20080118	HK20070109658	20070905
IL180873 A0	20070704	IL20070180873	20070122
IN00548CN2007 A	20070824	IN2007CN00548	20070207
JP2008509102 T2	20080327	JP20070524225T	20050723
KR20070041564 A	20070418	KR20077002917	20070206
MX2007000996 A1	20070416	MX20070000996	20070125
PT1805316 T	20090706	PT20050778085T	20050723
TW200619389 A	20060616	TW20050126457	20050804
US2007197788 AA	20070823	US20070669545	20070131
UY29053 A1	20060224	UY20050029053	20050805
WO06015716 A2	20060216	WO2005EP08058	20050723
WO06015716 A3	20060622	WO2005EP08058	20050723

Priority:

DE200410038403 20040807 WO2005EP08058 20050723

Probable Assignee: SANOFI AVENTIS DEUTSCHLAND GMBH

Assignee(s): (std): AVENTIS PHARMA GMBH ; HOLLA WOLFGANG ; KEIL STEFANIE ; SANOFI AVENTIS DEUTSCHLAND ; SANOFI AVENTIS DEUTSCHLAND GMB ; TAPPERTZHOFEN CHRISTOPH

Assignee(s): SANOFI AVENTIS DEUTSCHLAND GMBH ; AVENTIS PHARMA DEUTSCHLAND GMBH

Inventor(s): (std): CHRISTOPH HOLLA WOLFGANG KEIL ; HOLLA DR WOLFGANG ; KEIL DR STEFANIE ; TAPPERTZHOFEN DR CHRISTOPH ; TAPPERTZHOFEN CHRISTOPH ; KEIL STEFANIE ; HOLLA WOLFGANG

Inventor(s): WOLFGANG HOLLA ; STEFANIE KEIL ; HOLLA WOLFGANG KEIL STEFANIE TAPPERTZHOFEN ; HOLLA WOLFGANG KEIL STEFANIE TAPPERTZHOFEN CHRISTO ; CHRISTOPH TAPPERTZHOFEN ; DR CHRISTOPH TAPPERTZHOFEN ; DR STEFANIE KEIL ; DR WOLFGANG HOLLA

Agent(s): ROSS J OEHLER SANOFI AVENTIS US LLC

Designated states: AE AG AL AM AT AU AZ BA BB BE BF BG BJ BR BW BY BZ CA CF CG CH CI CM CN CO CR CU CY CZ DE DK DM DZ EC EE EG ES FI FR GA GB GD GE GH GM GN GQ GR GW HR HU ID IE IL IN IS IT JP KE KG KM KP KR KZ LC LI LK LR LS LT LU LV MA MC MD MG MK ML MN MR MW MX MZ NA NE NG NI NL NO NZ OM PG PH PL PT RO RU SC SD SE SG SI SK SL SM SN SY SZ TD TG TJ TM TN TR TT TZ UA UG US UZ VC VN YU ZA ZM ZW

8) Family number: 33210936 (US2008013038A)

Title: METHOD FOR DEFINING A SUPPLEMENTARY FACE FOR SPECTACLES

Abstract: Source: US2008013038A A method for defining a supplementary face for spectacles (or clip-on), comprising the steps of: i) choice of a lens suited to the wearer's prescription; ii) modelization of the position of the chosen lens and of the position of a supplementary face in front of the chosen lens; iii) choice of an optical function for the assembly of the chosen lens and supplementary face; iv) calculation of the characteristics of the supplementary face by optical optimization for a standard wearer, using the chosen optical function as optimization target. A supplementary face for spectacles, having: i) a detachable mounting device, suited to the detachable mounting of the supplementary face in front of a lens mounted in the spectacles; ii) a surface at least equal to the surface of the lens and iii) a continuous optical power variation over this surface.

Classifications:
International (IPC 8-9): G02C7/02 G02C7/08 G02C9/00 (Advanced/Invention); G02C7/02 (Core/Invention)
CPC: G02C7/024 G02C7/025 G02C7/061 G02C7/086
European: G02C7/02D G02C7/02D2 G02C7/06P G02C7/08N
US: 351/159.41 351/169 351/178 351/47 351/47P 351/57

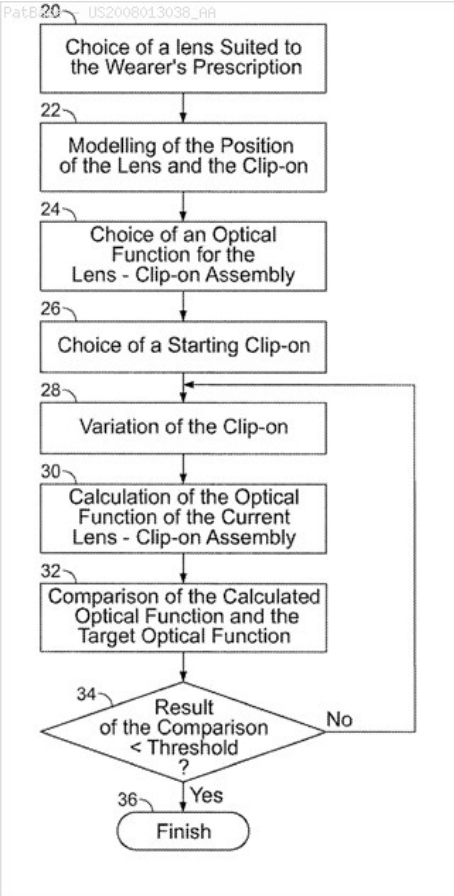

Family:

Publication number	Publication date	Application number	Application date
AU2006212096 AA	20060817	AU20060212096	20060207
AU2006212096 BB	20110811	AU20060212096	20060207
BRPI0607937 A2	20091020	BR2006PI07937	20060207
CA2595422 AA	20070719	CA20062595422	20060207
CN101116024 A	20080130	CN200680004295	20060207
EP1851582 A1	20071107	EP20060709264	20060207
FR2881846 A1	20060811	FR20050001245	20050208
FR2881846 B1	20070511	FR20050001245	20050208
JP2008530588 T2	20080807	JP20070553662T	20060207
KR20070100900 A	20071012	KR20077019273	20070823
US2008013038 AA	20080117	US20070779908	20070719
US7775657 BB	20100817	US20070779908	20070719
WO06084986 A1	20060817	WO2006FR00276	20060207

Priority:
FR20050001245 20050208 WO2006FR00276 20060207 US20070779908 20070719

Probable Assignee: ESSILOR INT COMPAGNIE GENERALE D OPTIQUE

Assignee(s): (std): ESSILOR INT ; GUILLOUX CYRIL

Assignee(s): ESSILOR INT COMP GENERALE D OPTIQU ; ESSILOR INT COMP GENERALE D OPTIQUE ; ESSILOR INTERNATIONAL COMPAGNIE GENERALE D'... ; ESSILOR INTERNATIONAL COMPAGNIE GENERALE D OPTIQUE ; ESSILOR INT COMPAGNIE GENERALE D OPTIQUE ; ESSILOR INTERNATIONAL CIE GENERALE D OPTIQUE SOCIETE PAR ACTIONS SIMPLIFIEE ; ESSILOR INT (COMPAGNIE GENERALE D'OPTIQUE) ; ESSILOR INT CIE GENERALE D OPTIQUE SOC PAR ACTION ; ESSILOR INT CIE GENERALE D OPTIQUE SOCIE ; ESSILOR INT COMP GEN D OPTIQUE

Inventor(s): (std): CYRIL GUILLOUX ; GUILLOUX CYRIL

Agent(s): FISH AND RICHARDSON PC; HENSLEY KIM AND HOLZER LLC

Designated states: AE AG AL AM AT AU AZ BA BB BE BF BG BJ BR BW BY BZ CA CF CG CH CI CM CN CO CR CU CY CZ DE DK DM DZ EC EE EG ES FI FR GA GB GD GE GH GM GN GQ GR GW HR HU ID IE IL IN IS IT JP KE KG KM KN KP KR KZ LC LI LK LR LS LT LU LV LY MA MC MD MG MK ML MN MR MW MX MZ NA NE NG NI NL NO NZ OM PG PH PL PT RO RU SC SD SE SG SI SK SL SM SN SY SZ TD TG TJ TM TN TR TT TZ UA UG US UZ VC VN YU ZA ZM ZW

9) Family number: 34102639 (US2008215146A)

© PatBase

Title: Intra-Ocular Artificial Lens for Iris-Driven Accommodation

Abstract: Source: US2008215146A An intra-ocular artificial lens with variable optical strength, wherein the artificial lens comprises two optical elements which are movable relative to each other in a direction extending transversely of the optical axis, wherein the optical elements have a form such that in different relative positions they together have different optical strengths, wherein the movable optical elements are connected to positioning means which are adapted for coupling to the iris of the eye for the purpose of driving. This measure makes use of the fact that one or both of the optical elements can be displaced relative to each other through the driving of the natural orbicularis muscle of the iris in order to obtain an accommodating function.

Classifications:
International (IPC 8-9): A61F2/16 G02C7/02 G02C7/08 (Advanced/Invention); A61F2/16 G02C7/02 (Core/Invention)
International (IPC 1-7): A61F2/16
CPC: A61F2/1632 A61F2/1613 A61F2/1648 A61F2/1616
European: A61F2/16B2 A61F2/16B4R A61F2/16B8
US: 623/6.11 623/6.110S 623/6.2 623/6.200S 623/6.32 623/6.320P 623/6.33 623/6.37 623/6.370P

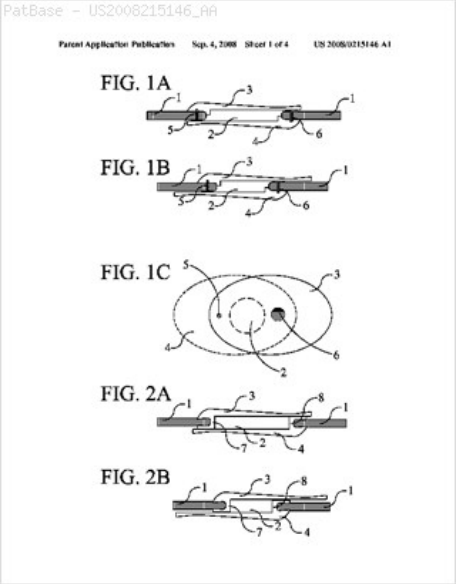

Family:

Publication number	Publication date	Application number	Application date
CN101198295 A	20080611	CN200680016468	20060511
CN101374476 A	20090225	CN200680016474	20060511
CN101374476 B	20120118	CN200680016474	20060511
EP1881806 A1	20080130	EP20060812713	20060511
EP1890652 A2	20080227	EP20060824304	20060511
IN08049DN2007 A	20080704	IN2007DN08049	20071018
JP2008539939 T2	20081120	JP20080511072T	20060511
JP4969569 B2	20120704	JP20080511072T	20060511
NL1029037 C2	20061114	NL20051029037	20050513
NL1029548 C2	20070119	NL20051029548	20050718
US2008215146 AA	20080904	US20060914276	20060511
US2009024214 AA	20090122	US20060914260	20060511
US8603167 BB	20131210	US20060914260	20060511
US8690942 BB	20140408	US20060914276	20060511
WO07015640 A1	20070208	WO2006NL50113	20060511
WO07027091 A2	20070308	WO2006NL50114	20060511
WO07027091 A3	20080619	WO2006NL50114	20060511

Priority:

NL20051029037 20050513 NL20051029548 20050718 WO2006NL50113 20060511 WO2006NL50114 20060511

Probable Assignee: AKKOLENS INT BV

Assignee(s): (std): AKKOLENS INT BV ; AKKOLENS INTERNAT B V ; ROMBACH MICHIEL CHRISTIAAN

Assignee(s): AKKOLENS INT ; AKKOLENS INTERNATIONAL B V

Inventor(s): (std): CHRISTIAAN ROMBACH MICHIEL ; ROMBACH MICHIEL CHRISTIAAN

Inventor(s): MICHIEL CHRISTIAAN ROMBACH ; ROMBACH MICHIEL

Agent(s): EVELEENS MAARSE PIETER; POWELL GOLDSTEIN LLP; JASON A; BARNES AND THORNBURG LLP

Designated states: AE AG AL AM AT AU AZ BA BB BE BF BG BJ BR BW BY BZ CA CF CG CH CI CM CN CO CR CU CY CZ DE DK DM DZ EC EE EG ES FI FR GA GB GD GE GH GM GN GQ GR GW HR HU ID IE IL IN IS IT JP KE KG KM KN KP KR KZ LC LI LK LR LS LT LU LV LY MA MC MD MG MK ML MN MR MW MX MZ NA NE NG NI NL NO NZ OM PG PH PL PT RO RU SC SD SE SG SI SK SL SM SN SY SZ TD TG TJ TM TN TR TT TZ UA UG US UZ VC VN YU ZA ZM ZW

10) Family number: 34402899 (US2007093891A)

Title: INTRAOCULAR LENS FOR CORRECTING CORNEAL COMA

Abstract: Source: US2007093891A When fitting a patient for an intraocular lens, a series of measurements is taken on the patient's eye that determines a required lens power. Next, a range of preferred shape factors may be found, which determine the base (i.e., spherical) radii of the two lens surfaces, essentially independent of the lens power. The preferred shape factor adjusts the third-order coma of the lens to largely offset the coma of the cornea, so that the image at the retina has a reduced amount of third-order coma. Once a preferred shape factor is determined, the base radii of curvature of the anterior and posterior surfaces are determined from the shape factor and the lens power by algebraic formulas. Finally, one or more aspheric terms are added to one or both of the surfaces in the lens, so that the spherical aberration of the lens largely offsets the spherical aberration of the cornea.

Classifications:
International (IPC 8-9): A61B3/00 A61F2/16 A61F9/013 G02C7/04 (Advanced/Invention);
A61F2/16 A61F9/007 G02C7/04 (Core/Invention)
CPC: A61B3/0025 A61F2/1613
European: A61B3/00C1 A61F2/16B K61B3/107 K61B3/10B
US: 351/159.2 351/159.200P 351/159.53 351/159.530S 351/177 351/177S 623/6.11 623/6.23

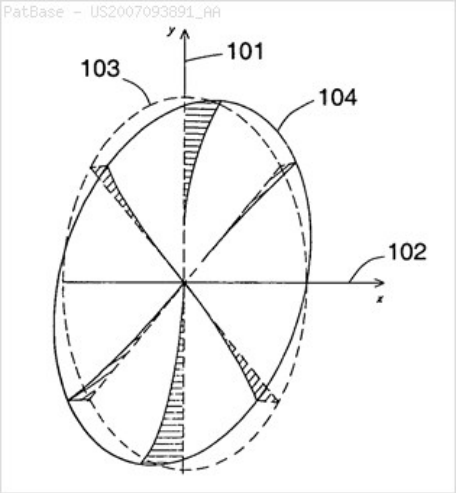

Family:

Publication number	Publication date	Application number	Application date
AU2006308099 AA	20070503	AU20060308099	20061026
AU2006308099 BB	20130704	AU20060308099	20061026
CA2627666 AA	20070503	CA20062627666	20061026
EP1940318 A1	20080709	EP20060806569	20061026
US2007093891 AA	20070426	US20050260013	20051026
US8801781 BB	20140812	US20050260013	20051026
WO07048615 A1	20070503	WO2006EP10346	20061026

Priority:
US20050260013 20051026 WO2006EP10346 20061026

Probable Assignee: ADVANCED MEDICAL OPTICS INC

Assignee(s): (std): AMO GRONINGEN B V ; AMO GRONINGEN BV ; ARTAL PABLO ; PIERS PATRICIA ; TABERNERO JUAN ; ABBOTT MEDICAL OPTICS INC

Assignee(s): ADVANCED MEDICAL OPTICS INC ; BANK OF AMERICA NA ; BANK OF AMERICA NA ADMINISTRATIVE AGENT AS

Inventor(s): (std): ARTAL PABLO ; PIERS PATRICIA ; TABERNERO JUAN

Inventor(s): JUAN TABERNERO ; PABLO ARTAL ; PATRICIA PIERS

Agent(s): WIEDEMANN PETER ET AL; ADVANCED MEDICAL OPTICS INC; ABBOTT MEDICAL OPTICS INC

Designated states: AE AG AL AM AT AU AZ BA BB BE BF BG BJ BR BW BY BZ CA CF CG CH CI CM CN CO CR CU CY CZ DE DK DM DZ EC EE EG ES FI FR GA GB GD GE GH GM GN GQ GR GT GW HN HR HU ID IE IL IN IS IT JP KE KG KM KN KP KR KZ LA LC LI LK LR LS LT LU LV LY MA MC MD MG MK ML MN MR MW MX MY MZ NA NE NG NI NL NO NZ OM PG PH PL PT RO RS RU SC SD SE SG SI SK SL SM SN SV SY SZ TD TG TJ TM TN TR TT TZ UA UG US UZ VC VN ZA ZM ZW

11) Family number: 35575513 (ES2277705B)

© PatBase

Title: ELEMENTO OPTICO QUE UTILIZA LA ABERRACION ESFERICA DE MODO OPTIMO PARA LA OBTENCION DE IMAGENES CON GRAN PROFUNDIDAD DE FOCO Y SU UTILIZACION PARA LA COMPENSACION DE LA PRESBICIE

Abstract: The optical component is constructed as a refractive or diffractive component or a combination of both, and is arranged for performing defocusing and symmetric rotation aberrations to partially or totally cancel the aberrations in an optical system. The optical component can be used in any image forming system to form an image with great center depth by compensating customized intraocular lens or contact lenses.

Classifications:
International (IPC 8-9): G02B26/06 G02B27/00 (Advanced/Invention);
G02B26/00 G02B27/00 (Core/Invention)
CPC: G02B26/06 G02B27/0068
European: G02B26/06 G02B27/00K7

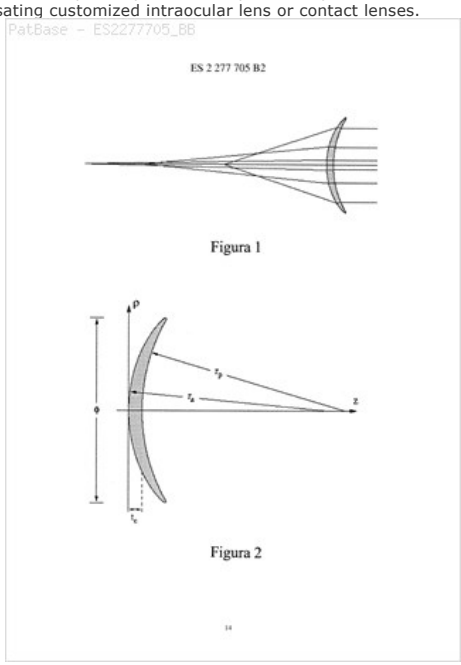

Family:

Publication number	Publication date	Application number	Application date
ES2277705 AA	20070716	ES20040002247	20040921
ES2277705 BB	20080716	ES20040002247	20040921

Priority:
ES20040002247 20040921

Probable Assignee: UNIV SANTIAGO COMPOSTELA
Assignee(s): (std): UNIV SANTIAGO COMPOSTELA
Assignee(s): UNIVERSIDADE DE SANTIAGO DE COMPOSTELA
Inventor(s): (std): ARES GARCIA JORGE ; BARA VINAS SALVADOR XURXO ; FLORES SEIJAS JOSE RAMON
Inventor(s): JORGE ARES GARCIA ; JOSE RAMON FLORES SEIJAS ; SALVADOR XURXO BARA VINAS

12) Family number: 40800827 (US2009125105A)

Title: ASPHERIC INTRAOCULAR LENS AND METHOD FOR MAKING THE SAME

Abstract: Source: US2009125105A The invention relates to a novel artificial intraocular lens (IOL) and a method for improving such a lens in the field of opthalmology, with surface shape modifications that differ from perfect spherical geometries. The intraocular lens takes into account the natural optical configuration of the human vision apparatus, for example, visual axis tilt and pupil decentration. In addition, the method accounts for potential positioning errors caused by implantation and surgery effects.

Classifications:
International (IPC 8-9): A61F2/14 A61F2/16 G02C7/02 G06F17/50 G09B23/28 G09B23/30 (Advanced/Invention);
A61F2/14 A61F2/16 (Advanced/Non-invention);
A61F2/14 A61F2/16 G06F17/50 (Core/Invention)
International (IPC 1-7): A61F2/16
CPC: A61F2/1613 G09B23/28 G09B23/30
European: A61F2/16B G09B23/28 G09B23/30
US: 351/159.2 351/159.200P 351/159.74 351/159.740S 351/177 351/178 623/6.11 623/6.23 703/1

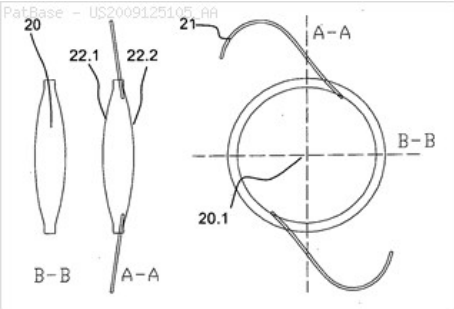

Family:

Publication number	Publication date	Application number	Application date
AT539703 E	20120115	AT20070724604T	20070426
AU2007247491 AA	20071115	AU20070247491	20070426
AU2007247491 BB	20101216	AU20070247491	20070426
CN101437468 A	20090520	CN200780016240	20070426
CN101437468 B	20120718	CN200780016240	20070426
DE102006021521 A1	20071108	DE200610021521	20060505
EP2034928 A1	20090318	EP20070724604	20070426
EP2034928 B1	20120104	EP20070724604	20070426
ES2380383 T3	20120511	ES20070724604T	20070426
IN09233DN2008 A	20090327	IN2008DN09233	20081104
JP2009536052 T2	20091008	JP20090508175T	20070426
JP4764507 B2	20110907	JP20090508175T	20070426
KR20090020588 A	20090226	KR20087029615	20081203
US2009125105 AA	20090514	US20080289789	20081104
US2011157548 AA	20110630	US20110064073	20110304
US8235525 BB	20120807	US20110064073	20110304
WO07128423 A1	20071115	WO2007EP03674	20070426

Priority:

DE200610021521 20060505 WO2007EP03674 20070426 US20080289789 20081104 US20110064073 20110304

Probable Assignee: ZEISS CARL MEDITEC AG

Assignee(s): (std)**:** GERLACH MARIO ; LESAGE CEDRIC ; ZEISS CARL MEDITEC AG

Assignee(s): CARL ZEISS MEDITEC AG

Inventor(s): (std)**:** MARIO GERLACH ; LESAGE CEDRIC ; GERLACH MARIO ; CEDRIC LESAGE

Agent(s): DAVIES COLLISON CAVE; CARL ZEISS AG - PATENTABTEILUNG; CARL ZEISS AG PATENTABTEILUNG; WALTER OTTESEN; WALTER

Designated states: AE AG AL AM AT AU AZ BA BB BE BF BG BH BJ BR BW BY BZ CA CF CG CH CI CM CN CO CR CU CY CZ DE DK DM DZ EC EE EG ES FI FR GA GB GD GE GH GM GN GQ GR GT GW HN HR HU ID IE IL IN IS IT JP KE KG KM KN KP KR KZ LA LC LI LK LR LS LT LU LV LY MA MC MD MG MK ML MN MR MT MW MX MY MZ NA NE NG NI NL NO NZ OM PG PH PL PT RO RS RU SC SD SE SG SI SK SL SM SN SV SY SZ TD TG TJ TM TN TR TT TZ UA UG US UZ VC VN ZA ZM ZW

13) Family number: 41914639 (US2010094413A)

Title: ACCOMMODATING INTRAOCULAR LENS WITH VARIABLE CORRECTION

Abstract: Source: US2010094413A An accommodating intraocular lens with variable optical power, comprising at least two optical elements, at least one of which is movable relative to the other in a direction perpendicular to the optical axis, wherein the optical elements form a lens with different optical power at different relative positions of the optical elements. At least two of the optical elements of the lens comprise at least one additional optical correction surface, which correction surfaces are adapted for simultaneous variable correction of one or more optical aberrations of the natural eye in which the degree of correction depends on the relative position of the optical elements.

Classifications:
International (IPC 8-9): A61F2/16 (Advanced/Invention);
A61F2/16 (Core/Invention);
A61F (Subclass/Invention)
International (IPC 1-7): A61F2/16
CPC: A61F2/1613 A61F2/1632 A61F2/1648
European: A61F2/16B A61F2/16B4R A61F2/16B8
US: 623/6.25 623/6.250P 623/6.27 623/6.270S

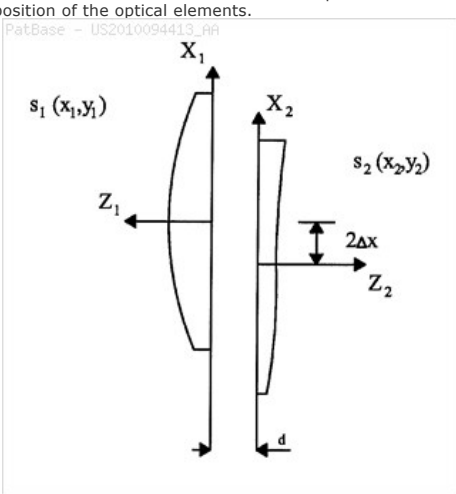

Family:

Publication number	Publication date	Application number	Application date
AT524139 E	20110915	AT20060125992T	20061213
CN101568312 A	20091028	CN200780046158	20071213
CN101568312 B	20130821	CN200780046158	20071213
EP1932492 A1	20080618	EP20060125992	20061213
EP1932492 B1	20110914	EP20060125992	20061213
ES2373566 T3	20120206	ES20060125992T	20061213
HK1135595 A1	20131206	HK20100103703	20100416
IN01078MN2009 A	20090619	IN2009MN01078	20090604
IN267843 B	20150807	IN2009MN01078	20090604
JP2010512814 T2	20100430	JP20090540774T	20071213
JP5298026 B2	20130925	JP20090540774T	20071213
US2010094413 AA	20100415	US20070518458	20071213
WO08071760 A2	20080619	WO2007EP63871	20071213
WO08071760 A3	20080918	WO2007EP63871	20071213

Priority:
EP20060125992 20061213 WO2007EP63871 20071213

Probable Assignee: AKKOLENS INT BV

Assignee(s): (std): AKKOLENS INT BV ; AKKOLENS INTERNAT B V ; ROMBACH MICHIEL CHRISTIAAN ; SIMONOV ALEKSEY NIKOLAEVICH

Assignee(s): AKKOLENS INTERNATIONAL B V

Inventor(s): (std): ROMBACH MICHIEL CHRISTIAAN ; SIMONOV ALEKSEY NIKOLAEVICH ; NIKOLAEVICH SIMONOV ALEKSEY ; CHRISTIAAN ROMBACH MICHIEL

Agent(s): EVELEENS MAARSE PIETER ET AL; EVELEENS MAARSE PIETER; BARNES AND THORNBURG LLP

Designated states: AE AG AL AM AT AU AZ BA BB BE BF BG BH BJ BR BW BY BZ CA CF CG CH CI CM CN CO CR CU CY CZ DE DK DM DO DZ EC EE EG ES FI FR GA GB GD GE GH GM GN GQ GR GT GW HN HR HU ID IE IL IN IS IT JP KE KG KM KN KP KR KZ LA LC LI LK LR LS LT LU LV LY MA MC MD ME MG MK ML MN MR MT MW MX MY MZ NA NE NG NI NL NO NZ OM PG PH PL PT RO RS RU SC SD SE SG SI SK SL SM SN SV SY SZ TD TG TJ TM TN TR TT TZ UA UG US UZ VC VN ZA ZM ZW

14) Family number: 42995070 (US2009187242A)

Title: INTRAOCULAR LENS HAVING EXTENDED DEPTH OF FOCUS

Abstract: Source: US2009187242A An intraocular lens is disclosed, which includes a diffractive element with a relatively low add power. The add power may be less than about 2 Diopters, may be less than about 1 Diopter, or may be in the ranges of 0.5 to 2.5 Diopters, or 1.0 to 2.0 Diopters, or 1.5 to 2.0 Diopters, or 1.0 to 1.5 Diopters. The low-add-power diffractive element increases the depth of the focus of the intraocular lens, for example, compared to a similarly shaped intraocular lens without the diffractive element. In one embodiment, the depth of focus is defined in terms of a threshold MTF value at a particular spatial frequency. The threshold may be an absolute threshold, such as 0.10, 0.15, 0.17, 0.20, 0.25 or 0.30, or may be a relative threshold, such as a particular percentage of the peak value. The spatial frequency may be 25 line pairs per mm, 50 line pairs per mm, 100 line pairs per mm, or any suitable value.

Classifications:
International (IPC 8-9): A61F2/16 G02B27/00 G02C7/04 G02C7/08 (Advanced/Invention);
A61F2/16 G02C7/04 (Core/Invention)
CPC: A61F2/1613 G02C7/028 G02C7/042 A61F2002/1699 A61F2/1645 A61F2/1654 G02B3/06 G02B27/0075 G02C7/02 G02C7/041 G02C2202/02 G02C2202/20
European: A61F2/16B A61F2/16B10 G02B27/00M G02B3/06 G02C7/02 G02C7/02D6 G02C7/04B G02C7/04B2 K61F2/16B6T K61F2/16W S02C202/02 S02C202/20
US: 623/6.24 623/6.240P 623/6.27 623/6.270P 623/6.270S 623/6.28 623/6.280S 623/6.3 623/6.300P

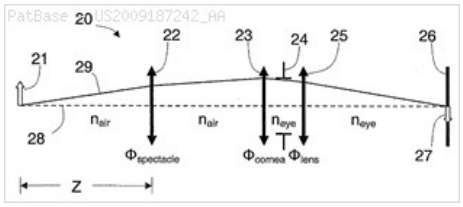

Family:

Publication number	Publication date	Application number	Application date
AU2008292187 AA	20090305	AU20080292187	20080827
AU2008292187 BB	20140130	AU20080292187	20080827
AU2009246734 AA	20091119	AU20090246734	20090430
AU2011276241 AA	20120112	AU20110276241	20110707
AU2011276241 BB	20150312	AU20110276241	20110707
CA2697969 AA	20090305	CA20082697969	20080827
CA2731817 AA	20091119	CA20092731817	20090430
CA2804777 AA	20130108	CA20112804777	20110707
EP2180849 A2	20100505	EP20080787528	20080827
EP2180849 B1	20141015	EP20080787528	20080827
EP2334260 A2	20110622	EP20090747166	20090430
EP2590594 A2	20130515	EP20110743165	20110707
US2009187242 AA	20090723	US20080197249	20080823
US2009234448 AA	20090917	US20080120201	20080513
US2011166652 AA	20110707	US20100832816	20100708
US8740978 BB	20140603	US20080120201	20080513
US8747466 BB	20140610	US20080197249	20080823
WO09027438 A2	20090305	WO2008EP61235	20080827
WO09027438 A3	20090416	WO2008EP61235	20080827
WO09140080 A2	20091119	WO2009US42449	20090430
WO09140080 A3	20091230	WO2009US42449	20090430
WO12006385 A2	20120112	WO2011US43119	20110707
WO12006385 A3	20120329	WO2011US43119	20110707

Priority:

US20070968250P 20070827 US20080120201 20080513 US20080197249 20080823
WO2008EP61235 20080827 WO2009US42449 20090430 US20100832816 20100708
WO2011US43119 20110707

Probable Assignee: AMO GRONINGEN BV

Assignee(s): (std): AMO GRONINGEN BV ; PIERS PATRICIA ANN ; AMO REGIONAL HOLDINGS ; WEEBER HENDRIK A ; REISIN CARINA R ; PIERS PATRICIA A ; ZHAO HUAWEI ; BOGAERT THEOPHILUS ; ABBOTT MEDICAL OPTICS INC ; ADVANCED MEDICAL OPTICS INC

Assignee(s): AMO GRONINGEN B V

Inventor(s): (std): BOGAERT THEOPHILUS ; PIERS PATRICIA A ; PIERS PATRICIA ANN ; REISIN CARINA R ; WEEBER HENDRIK A ; WEEBER HENDRIK ALBERT ; ZHAO HUAWEI

Inventor(s): CARINA R REISIN ; HENDRIK A WEEBER ; PATRICIA A PIERS ; PATRICIA ANN PIERS

Agent(s): DAVIES COLLISON CAVE; GOWLING LAFLEUR HENDERSON LLP; HOFFMANN EITLE; ABBOTT MEDICAL OPTICS INC; AMO REGIONAL HOLDINGS; AMO GRONINGEN BV; HOFFMANN EITLE ET AL; WEBER DAVID; KIM ROY

Designated states: AE AG AL AM AO AT AU AZ BA BB BE BF BG BH BJ BR BW BY BZ CA CF CG CH CI CL CM CN CO CR CU CY CZ DE DK DM DO DZ EC EE EG ES FI FR GA GB GD GE GH GM GN GQ GR GT GW HN HR HU ID IE IL IN IS IT JP KE KG KM KN KP KR KZ LA LC LI LK LR LS LT LU LV LY MA MC MD ME MG MK ML MN MR MT MW MX MY MZ NA NE NG NI NL NO NZ OM PE PG PH PL PT RO RS RU SC SD SE SG SI SK SL SM SN ST SV SY SZ TD TG TH TJ TM TN TR TT TZ UA UG US UZ VC VN ZA ZM ZW

15) Family number: 43222164 (US2010274234A)

Title: METHODS AND DEVICES FOR REFRACTIVE TREATMENTS OF PRESBYOPIA

Abstract: Source: US2010274234A Presbyopia in a patient's eye is treated by inducing spherical aberration in the central section of the pupil, while the peripheral section of the pupil is treated in a manner other than the central section of the pupil. For example, the peripheral section of the pupil may remain untreated, or high-order aberration may be controlled, and/or a second area of spherical aberration may be provided with different focus power.

Classifications:
International (IPC 8-9): A61B18/18 A61B19/00 A61B3/00 A61F2/16 A61F9/007 A61F9/008 A61F9/013 G02C7/02 G02C7/04 G02C7/06 (Advanced/Invention); A61B18/18 (Core/Invention)
CPC: A61F9/00808 A61F9/008 A61F9/00812 A61F9/00819 A61F2009/00872 A61F2009/0088 A61F2009/00895 G02C7/042 G02C7/044 G02C2202/22
European: A61F9/008 A61F9/008A1P K61F9/008A3 K61F9/008A50A K61F9/008L5 K61F9/008P1 K61F9/008R4
US: 128/898 351/159 351/159.75 351/160R 351/200 606/5 606/5P

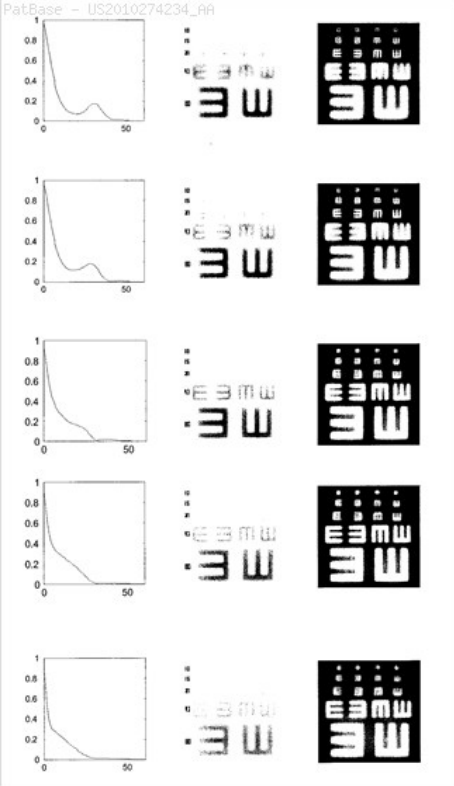

Family:

Publication number	Publication date	Application number	Application date
CN101909539 A	20101208	CN200880123102	20081028
CN101909539 B	20140416	CN200880123102	20081028
EP2211747 A1	20100804	EP20080844582	20081028
EP2211747 A4	20130807	EP20080844582	20081028
JP2011502011 T2	20110120	JP20100531325T	20081028
JP2015077412 A2	20150423	JP20140233442	20141118
MX2010004492 A1	20100830	MX20100004492	20100423
US2010274234 AA	20101028	US20080739742	20081028
US2013324983 AA	20131205	US20130961753	20130807
US8529559 BB	20130910	US20080739742	20081028
US8858541 BB	20141014	US20130961753	20130807
WO09058755 A1	20090507	WO2008US81421	20081028

Priority:

US20070000643P 20071029 WO2008US81421 20081028 US20080739742 20081028
US20130961753 20130807 US20100739742 20100425 JP20100531325 20081028

Probable Assignee: LIANG JUNZHONG
Assignee(s): (std): JUNZHONG LIANG ; LIANG JUNZHONG
Inventor(s): (std): JUNZHONG LIANG ; LIANG JUNZHONG
Agent(s): GERVASI GEMMA; MUELLER LAW OFFICE PC; FESSENMAIER MARTIN ET AL
Designated states: AE AG AL AM AO AT AU AZ BA BB BE BF BG BH BJ BR BW BY BZ CA CF CG CH CI CM CN CO CR CU CY CZ DE DK DM DO DZ EC EE EG ES FI FR GA GB GD GE GH GM GN GQ GR GT GW HN HR HU ID IE IL IN IS IT JP KE KG KM KN KP KR KZ LA LC LI LK LR LS LT LU LV LY MA MC MD ME MG MK ML MN MR MT MW MX MY MZ NA NE NG NI NL NO NZ OM PG PH PL PT RO RS RU SC SD SE SG SI SK SL SM SN ST SV SY SZ TD TG TJ TM TN TR TT TZ UA UG US UZ VC VN ZA ZM ZW

16) Family number: 43430671 (US2009160075A)

Title: METHODS FOR FABRICATING CUSTOMIZED INTRAOCULAR LENSES

Abstract: Source: US2009160075A In one aspect, the present invention provides methods for custom fabrication of IOLs. In some embodiments, such methods call for measuring one or more aberrations of a patient's eye, and determining the profile of at least one surface of an IOL that would ameliorate, and control those aberrations. The surface profile can then be imparted to a surface of a starting lens (or a lens blank) via ablation, e.g., by utilizing an excimer laser **beam**. In some other embodiments, the measured aberrations can be utilized to determine the profile of at least one surface of a wafer mold. A wafer mold having that surface profile can then be fabricated, e.g., by ablating a slab or an existing wafer of appropriate material, and the mold can be used to fabricate an IOL suitable for implantation in the patient's eye.

Classifications:
International (IPC 8-9): A61F2/16 A61F9/007 A61L27/00 B23K26/40 B29D11/00 B29D11/02 (Advanced/Invention);
A61F2/16 B23K26/00 B29D11/00 (Core/Invention);
A61F2/16 (Core/Non-invention)
International (IPC 1-7): A61F2/16
CPC: A61B3/1015 A61F2/14 B23K26/4065 B29D11/00461 B29D11/023 G02C7/04
European: A61B3/10F B23K26/40B7H B29D11/00C22F B29D11/02B G02C7/04 K61F2/14
US: 264/1.37 264/1.370P 606/107 606/107S

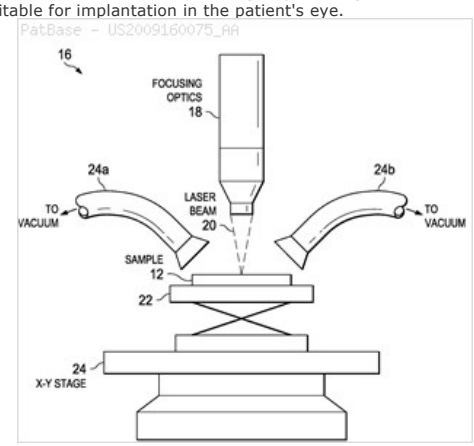

Family:

Publication number	Publication date	Application number	Application date
AR070681 AA	20100428	AR2008P105675	20081222
AU2008343086 AA	20090709	AU20080343086	20081218
CA2700890 AA	20090709	CA20082700890	20081218
CN101842225 A	20100922	CN200880113663	20081218
EP2219855 A2	20100825	EP20080868530	20081218
IN01737KN2010 A	20111125	IN2010KN01737	20100513
JP2011507627 T2	20110310	JP20100539826T	20081218
TW200934460 A	20090816	TW20080149685	20081219
US2009160075 AA	20090625	US20080337192	20081217
WO09086004 A2	20090709	WO2008US87521	20081218
WO09086004 A3	20090827	WO2008US87521	20081218

Priority:

US20070016241P 20071221 US20070016241 20071221 US20080337192 20081217 WO2008US87521 20081218

Probable Assignee: ALCON INC

Assignee(s): (std)**:** ALCON INC ; CARSON DANIEL R ; DAS KAMAL K ; SIMPSON MICHAEL J

Inventor(s): (std)**:** DAS KAMAL K ; CARSON DANIEL R ; SIMPSON MICHAEL J

Inventor(s): CARSON DANIEL ; DANIEL R CARSON ; DAS KAMAL ; KAMAL K DAS ; MICHAEL J SIMPSON ; SIMPSON MICHAEL

Agent(s): HANNA PETER WILLIAM DEREK; ALCON; PREJEAN JONATHAN E ET AL

Designated states: AE AG AL AM AO AT AU AZ BA BB BE BF BG BH BJ BR BW BY BZ CA CF CG CH CI CM CN CO CR CU CY CZ DE DK DM DO DZ EC EE EG ES FI FR GA GB GD GE GH GM GN GQ GR GT GW HN HR HU ID IE IL IN IS IT JP KE KG KM KN KP KR KZ LA LC LI LK LR LS LT LU LV LY MA MC MD ME MG MK ML MN MR MT MW MX MY MZ NA NE NG NI NL NO NZ OM PG PH PL PT RO RS RU SC SD SE SG SI SK SL SM SN ST SV SY SZ TD TG TJ TM TN TR TT TZ UA UG US UZ VC VN ZA ZM ZW

17) Family number: 43648873 (US2009213326A)

Title: TORIC INTRAOCULAR LENS WITH SPATIALLY-VARIANT ASTIGMATISM

Abstract: Source: US2009213326A An intraocular lens for correcting or reducing the astigmatism of a cornea includes a pupil that is spatially divided into discrete zones, with each zone having a particular astigmatism magnitude and astigmatism orientation. In one embodiment, the zones all have the same astigmatism magnitude, which is equal and opposite the cornea astigmatism magnitude to within a particular tolerance, such as 0.25 diopters. In one embodiment, some or all of the zones all have different astigmatism orientations, with the angular separation between astigmatism orientations being on the order of the rotational misalignment tolerance of the lens to the cornea. The visual performance of such a lens deteriorates more slowly with rotational misalignment, when compared to a comparable lens having a uniform astigmatism orientation across its entire pupil, leading to more relaxed tolerances for a surgeon that implants the lens.

Classifications:
International (IPC 8-9): A61F2/16 G02C7/00 G02C7/02 G02C7/04 G02C7/06 G02C7/08 (Advanced/Invention);
A61F2/16 G02C7/02 G02C7/04 G02C7/06 (Core/Invention)
CPC: G02C7/027 G02C7/042 G02C7/044 G02C2202/20 G02C7/045 A61F2/1613 G02C7/028 G02C7/04 G02C2202/02 G02C7/041
European: A61F2/16B G02C7/02D6 G02C7/04 G02C7/04B G02C7/04B2 G02C7/04B6 S02C202/02 S02C202/20
US: 351/159 351/159.01 351/159.21 351/159.44 351/159.440P 351/159.46 351/159.52 351/159.520P 351/159.53 351/159.71 351/159.74 351/169 351/169P 351/176 351/176P 623/6.11 623/6.27 623/6.29 623/6.290S

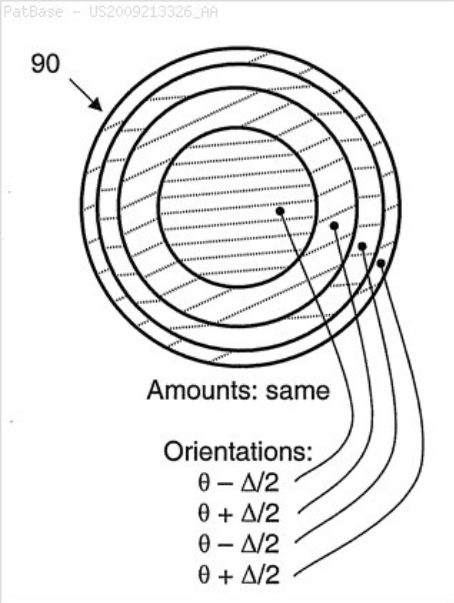

Family:

Publication number	Publication date	Application number	Application date
AU2009215513 AA	20090827	AU20090215513	20090219
AU2009215513 BB	20140626	AU20090215513	20090219
AU2010258640 AA	20101216	AU20100258640	20100610
AU2010258640 BB	20150319	AU20100258640	20100610
CA2716243 AA	20090827	CA20092716243	20090219
CA2765168 AA	20101216	CA20102765168	20100610
EP2245501 A1	20101103	EP20090713653	20090219
EP2440158 A1	20120418	EP20100725345	20100610
US2009213326 AA	20090827	US20080035370	20080221
US2009323020 AA	20091231	US20090542436	20090817
US2011170057 AA	20110714	US20100839241	20100719
US2012281182 AA	20121108	US20120544593	20120709
US2013253644 AA	20130926	US20130892888	20130513
US7780290 BB	20100824	US20080035370	20080221
US8215771 BB	20120710	US20100839241	20100719
US8439498 BB	20130514	US20090542436	20090817
US8562131 BB	20131022	US20120544593	20120709
WO09105567 A1	20090827	WO2009US34555	20090219
WO10144697 A1	20101216	WO2010US38167	20100610

Priority:

US20080035370 20080221
US20090542436 20090817
US20120544593 20120709
WO2009US34555 20090219
US20100839241 20100719
US20130892888 20130513
US20090185911P 20090610
WO2010US38167 20100610

Probable Assignee: ABBOTT MEDICAL OPTICS INC

Assignee(s): (std): ADVANCED MEDICAL OPTICS INC ; PIERS PATRICIA ANN ; ZHAO HUAWEI ; WEEBER HENDRIK ; WEEBER HENDRIK A ; ABBOTT MEDICAL OPTIC INC ; ABBOTT MEDICAL OPTICS INC

Inventor(s): (std): PIERS PATRICIA ANN ; WEEBER HENDRIK ; WEEBER HENDRIK A ; ZHAO HUAWEI

Inventor(s): HUAWEI ZHAO

Agent(s): HOFFMANN EITLE; ABBOTT MEDICAL OPTICS INC; ABBOTT MEDICAL OPTICS INC LEGAL DEPARTMENT; WEBER DAVID; BRADLEY NICOLE S

Designated states: AE AG AL AM AO AT AU AZ BA BB BE BF BG BH BJ BR BW BY BZ CA CF CG CH CI CL CM CN CO CR CU CY CZ DE DK DM DO DZ EC EE EG ES FI FR GA GB GD GE GH GM GN GQ GR GT GW HN HR HU ID IE IL IN IS IT JP KE KG KM KN KP KR KZ LA LC LI LK LR LS LT LU LV LY MA MC MD ME MG MK ML MN MR MT MW MX MY MZ NA NE NG NI NL NO NZ OM PE PG PH PL PT RO RS RU SC SD SE SG SI SK SL SM SN ST SV SY SZ TD TG TH TJ TM TN TR TT TZ UA UG US UZ VC VN ZA ZM ZW

18) Family number: 43764076 (US2010321635A)

Title: METHOD FOR DETERMINING THE CONFIGURATION OF AN OPHTHALMIC LENS, OPHTHALMIC LENS PRODUCED ACCORDING TO SAID METHOD, AND METHOD FOR PRODUCING SAID LENS

Abstract: Source: US2010321635A The invention relates to a method for determining the configuration of an ophthalmic lens intended to correct the visual acuity of a user, this method comprising the steps of determining the form of a base optical corrective element according to at least one of the following parameters: the desired power of the ophthalmic lens; the desired resolution or modulation transfer function MTF; the desired extent of the correction of the spherical aberrations (SA) of said ophthalmic lens; the desired extent of the correction of the spherical aberrations (SA) of the cornea of the user; the desired extent of the correction of the chromatic aberrations of said ophthalmic lens; the desired extent of the correction of the chromatic aberrations of the cornea of the user; the desired extent of the correction of high order aberrations (HOA). Furthermore the method comprises a step of determining the profile of a diffractive phase element (DPE) structure, said determination comprising the steps of defining a desired depth of focus of said ophthalmic lens; of calculating the phase distribution to be created at the entrance pupil of the lens, from the desired depth of focus; of finding the phases which minimize the differences between the effective phase distribution and the desired phase distribution and of converting the phase data into geometrical data in order to define the profile of the diffractive phase distribution structure. The method finally comprises juxtaposing the resulting diffractive phase element structure and the base optical corrective element. The invention also concerns a lens obtained according to the above mentioned method as well as a method for the producing such a lens.

Classifications:
International (IPC 8-9): A61F2/16 G02C7/02 G02C7/04 G02C7/06 (Advanced/Invention); G02C7/04 G02C7/06 (Core/Invention)
CPC: A61F2/16 G02C7/028 G02C7/042 G02C7/06 G02C2202/20 G02C2202/22 G02C7/02 G02C7/04
European: A61F2/16 G02C7/02 G02C7/02D6 G02C7/04 G02C7/04B2 G02C7/06 K61F2/16 S02C202/20 S02C202/22
US: 351/159 351/159.74 351/159.75 351/159.750P 351/177

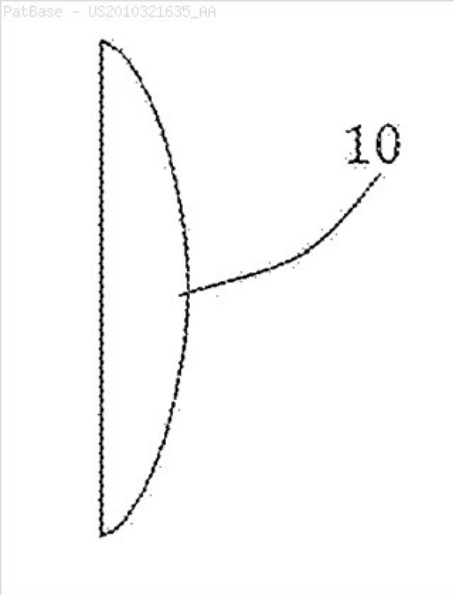

Family:

Publication number	Publication date	Application number	Application date
CH699972 A2	20100531	CH20080001803	20081120
EP2243053 A2	20101027	EP20090721273	20090205
US2010321635 AA	20101223	US20090866442	20090205
US8240850 BB	20120814	US20090866442	20090205
WO09115932 A2	20090924	WO2009IB50463	20090205
WO09115932 A3	20100311	WO2009IB50463	20090205

Priority:

CH20080000161 20080206 CH20080016108 20080206 CH20080000255 20080222
CH20080001803 20081120 CH20080025508 20080222 WO2009IB50463 20090205

Probable Assignee: SAV IOL SA

Assignee(s): (std): APTER ALAIN ; APTER ROBERT ; SAV IOL SA

Assignee(s): ALAIN APTER ; ROBERT APTER

Inventor(s): (std): APTER ALAIN ; APTER ROBERT

Inventor(s): ROBERT APTER ; SAV IOL SA ; ALAIN APTER

Agent(s): LEMAN CONSULTING S A; DLA PIPER LLP (US),ATTN: PATENT GROUP; DLA PIPER LLP US ATTN PATENT GROUP; DLA PIPER LLP US; LEMAN CONSULTING S A 284

Designated states: AE AG AL AM AO AT AU AZ BA BB BE BF BG BH BJ BR BW BY BZ CA CF CG CH CI CM CN CO CR CU CY CZ DE DK DM DO DZ EC EE EG ES FI FR GA GB GD GE GH GM GN GQ GR GT GW HN HR HU ID IE IL IN IS IT JP KE KG KM KN KP KR KZ LA LC LI LK LR LS LT LU LV LY MA MC MD ME MG MK ML MN MR MT MW MX MY MZ NA NE NG NI NL NO NZ OM PG PH PL PT RO RS RU SC SD SE SG SI SK SL SM SN ST SV SY SZ TD TG TJ TM TN TR TT TZ UA UG US UZ VC VN ZA ZM ZW

19) Family number: 43811875 (US2011029073A)

© PatBase

Title: METHODS AND DEVICES FOR REFRACTIVE CORRECTIONS OF PRESBYOPIA

Abstract: Source: US2011029073A Presbyopia in a patient's eye is treated by inducing spherical aberration in the central section of the pupil, while the peripheral section of the pupil is treated in a manner other than the central section of the pupil. For example, the peripheral section of the pupil may remain untreated, or high-order aberration may be controlled, and/or a second area of spherical aberration may be provided with different focus power.

Classifications:
International (IPC 8-9): A61F2/14 A61F2/16 G02C7/04 G02C7/06 G02C7/10 (Advanced/Invention);
A61F2/14 A61F2/16 (Core/Invention)
CPC: A61F2/147 A61F2/1613 A61F9/00808 A61F9/00812 A61F2009/00872 A61F2009/0088 G02C7/02 G02C7/028 G02C7/042 G02C7/044 G02C7/061
European: A61F2/14R A61F2/16B A61F9/008A1P G02C7/02 G02C7/02D6 G02C7/04B2 G02C7/04B6 G02C7/06P K61F9/008A3 K61F9/008L5 K61F9/008P1
US: 351/159.12 351/159.120S 351/161 351/164 351/168 351/169 351/171 623/5.11 623/5.110P

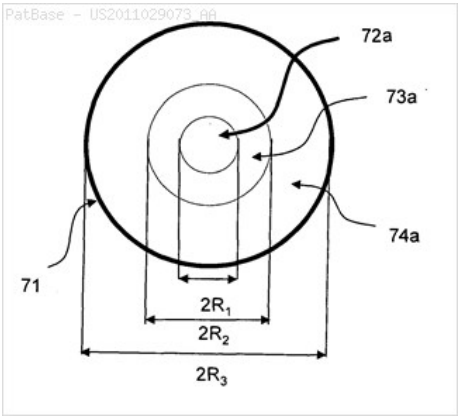

Family:

Publication number	Publication date	Application number	Application date
EP2265216 A2	20101229	EP20090727292	20090331
EP2265216 A4	20150729	EP20090727292	20090331
MX2010010714 A1	20101109	MX20100010714	20100929
US2011029073 AA	20110203	US20090935287	20090331
WO09123700 A2	20091008	WO2009US01980	20090331
WO09123700 A3	20091223	WO2009US01980	20090331

Priority:
US20080072653P 20080402 WO2009US01980 20090331 US20090935287 20090331

Probable Assignee: LIANG JUNZHONG
Assignee(s): (std): LIANG JUNZHONG
Assignee(s): JUNZHONG LIANG
Inventor(s): (std): LIANG JUNZHONG
Inventor(s): JUNZHONG LIANG
Agent(s): GERVASI GEMMA; MUELLER LAW OFFICE PC; FESSENMAIER MARTIN ET AL
Designated states: AE AG AL AM AO AT AU AZ BA BB BE BF BG BH BJ BR BW BY BZ CA CF CG CH CI CM CN CO CR CU CY CZ DE DK DM DO DZ EC EE EG ES FI FR GA GB GD GE GH GM GN GQ GR GT GW HN HR HU ID IE IL IN IS IT JP KE KG KM KN KP KR KZ LA LC LI LK LR LS LT LU LV LY MA MC MD ME MG MK ML MN MR MT MW MX MY MZ NA NE NG NI NL NO NZ OM PG PH PL PT RO RS RU SC SD SE SG SI SK SL SM SN ST SV SY SZ TD TG TJ TM TN TR TT TZ UA UG US UZ VC VN ZA ZM ZW

20) Family number: 44928181 (US2010097569A)

© PatBase

Title: MULTIFOCAL INTRAOCULAR LENS

Abstract: Source: US2010097569A An intraocular lens for providing a subject with vision at various distances includes an optic having a first surface with a first shape, an opposing second surface with a second shape, a multifocal refractive profile, and one or more diffractive portions. The optic may include at least one multifocal diffractive profile. In some embodiments, multifocal diffractive and the multifocal refractive profiles are disposed on different, distinct, or non-overlapping portions or apertures of the optic. Alternatively, portions of the multifocal diffractive profiles and the multifocal refractive profiles may overlap within a common aperture or zone of the optic.

Classifications:
International (IPC 8-9): A61F2/16 G02C7/04 G02C7/06 (Advanced/Invention); A61F2/16 (Advanced/Non-invention); A61F2/16 G02C7/04 G02C7/06 (Core/Invention)
CPC: A61F2/1654 A61F2/1618 A61F2250/0014 G02C7/042 G02C7/044 G02C7/06 G02C2202/20
European: A61F2/16B10 A61F2/16B2F G02C7/04B2 G02C7/04B6 G02C7/06 K61F250/00N S02C202/20
US: 351/159.05 351/159.43 351/159.44 351/159.440P 351/169 351/169P 351/171 351/171S 623/6.28 623/6.3 623/6.300S

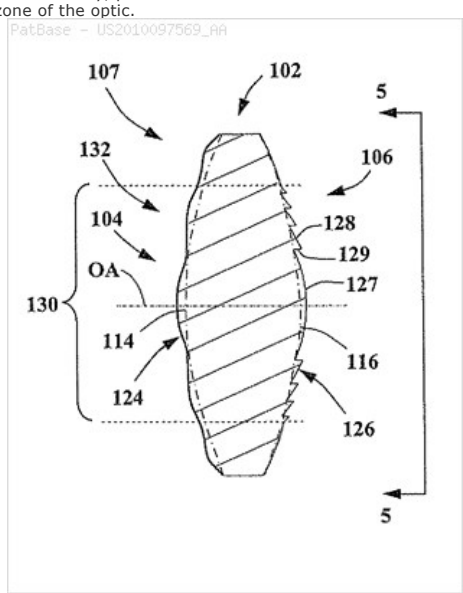

Family:

Publication number	Publication date	Application number	Application date
AU2009306443 AA	20100429	AU20090306443	20091020
AU2009306443 BB	20141016	AU20090306443	20091020
CA2741158 AA	20100429	CA20092741158	20091020
EP2364457 A1	20110914	EP20090740311	20091020
EP2364457 B1	20150819	EP20090740311	20091020
US2010097569 AA	20100422	US20080254710	20081020
US2013090730 AA	20130411	US20120649723	20121011
US8292953 BB	20121023	US20080254710	20081020
WO10046356 A1	20100429	WO2009EP63723	20091020

Priority:
US20080254710 20081020 WO2009EP63723 20091020 US20120649723 20121011

Probable Assignee: AMO GRONINGEN BV

Assignee(s): (std)**:** AMO GRONINGEN B V ; WEEBER HENDRIK A ; PIERS PATRICIA ANN ; VAN DER MOOREN MARRIE H ; BANDHAUER MARK H ; ZHAO HUAWEI ; AMO GRONINGEN BV ; MOOREN MARRIE H VAN D ; ABBOTT MEDICAL OPTICS INC ; ADVANCED MEDICAL OPTICS INC

Inventor(s): (std)**:** BANDHAUER MARK H ; PIERS PATRICIA ANN ; VAN DER MOOREN MARRIE H ; WEEBER HENDRIK A ; ZHAO HUAWEI ; MOOREN MARRIE H VAN D ; MOOREN MARRIE H VAN DER

Inventor(s): PATRICIA ANN PIERS ; HENDRIK A WEEBER ; HUAWEI ZHAO ; MARK H BANDHAUER ; MARRIE H VAN DER MOOREN

Agent(s): DAVIES COLLISON CAVE; GOWLING LAFLEUR HENDERSON LLP; HOFFMANN EITLE; ABBOTT MEDICAL OPTICS INC; AMO GRONINGEN BV; SIEGERT GEORG ET AL

Designated states: AE AG AL AM AO AT AU AZ BA BB BE BF BG BH BJ BR BW BY BZ CA CF CG CH CI CL CM CN CO CR CU CY CZ DE DK DM DO DZ EC EE EG ES FI FR GA GB GD GE GH GM GN GQ GR GT GW HN HR HU ID IE IL IN IS IT JP KE KG KM KN KP KR KZ LA LC LI LK LR LS LT LU LV LY MA MC MD ME MG MK ML MN MR MT MW MX MY MZ NA NE NG NI NL NO NZ OM PE PG PH PL PT RO RS RU SC SD SE SG SI SK SL SM SN ST SV SY SZ TD TG TJ TM TN TR TT TZ UA UG US UZ VC VN ZA ZM ZW

21) Family number: 44928976 (US2010100178A)

© PatBase

Title: MULTIFOCAL INTRAOCULAR LENS

Abstract: Source: US2010100178A An intraocular lens for providing a subject with vision at various distances includes an optic having a first surface with a first shape, an opposing second surface with a second shape, a multifocal refractive profile, and one or more diffractive portions. The optic may include at least one multifocal diffractive profile. In some embodiments, multifocal diffractive and the multifocal refractive profiles are disposed on different, distinct, or non-overlapping portions or apertures of the optic. Alternatively, portions of the multifocal diffractive profiles and the multifocal refractive profiles may overlap within a common aperture or zone of the optic.

Classifications:
International (IPC 8-9): A61F2/16 G02C7/06 (Advanced/Invention)
CPC: A61F2/1618 A61F2/1654 A61F2250/0014 G02C7/042 G02C7/044 G02C7/06 G02C2202/20
European: A61F2/16B10 A61F2/16B2F G02C7/04B2 G02C7/04B6 G02C7/06 K61F250/00N S02C202/20
US: 351/159.41 351/159.410S 351/169 351/169S 623/6.24 623/6.27 623/6.28 623/6.280P 623/6.3 623/6.31

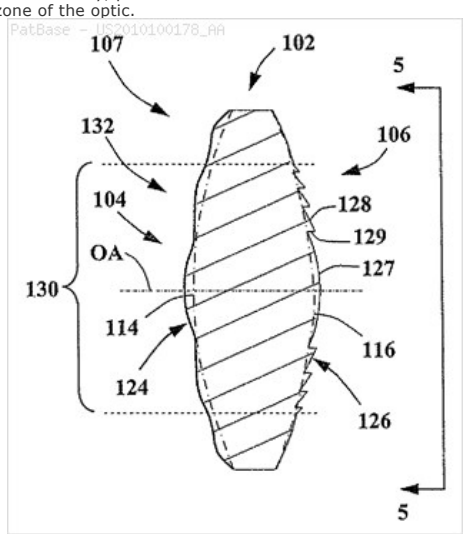

Family:

Publication number	Publication date	Application number	Application date
US2010100178 AA	20100422	US20080254723	20081020
US8734511 BB	20140527	US20080254723	20081020

Priority:

US20080254723 20081020

Probable Assignee: ADVANCED MEDICAL OPTICS INC

Assignee(s): (std)**:** ADVANCED MEDICAL OPTICS INC ; AMO GRONINGEN BV ; BANDHAUER MARK H ; MOOREN MARRIE H VAN D ; PIERS PATRICIA ANN ; WEEBER HENDRIK A ; ZHAO HUAWEI

Inventor(s): (std)**:** BANDHAUER MARK H ; MOOREN MARRIE H VAN D ; PIERS PATRICIA ANN ; VAN DER MOOREN MARRIE H ; WEEBER HENDRIK A ; ZHAO HUAWEI

Agent(s): ABBOTT MEDICAL OPTICS INC; AMO GRONINGEN BV

22) Family number: 46558856 (US2012029631A)

Title: OPHTHALMIC LENS WITH OPTICAL SECTORS

Abstract: Source: US2012029631A The invention relates to an ophthalmic lens comprising a main lens part, a recessed part, an optical centre, and an optical axis through said optical centre, said main lens part having at least one boundary with said recessed part, said main lens part having an optical power of between about -20 to about +35 dioptre, said recessed part positioned at a distance of less than 2 mm from said optical centre and comprising a near part having a relative dioptre of about +1.0 to about +5.0 with respect to the optical power of said main lens part, said boundary or boundaries of said recessed lens part with said main lens part form a blending part or blending parts, are shaped to refract light away from said optical axis, and have a curvature resulting in a loss of light, within a circle with a diameter of 4 mm around said optical centre, of less than about 15 percent.

Classifications:
International (IPC 8-9): A01F A61F2/14 A61F2/16 G02C7/02 G02C7/04 G02C7/06 (Advanced/Invention);
G02C7/02 G02C7/06 (Advanced/Non-invention);
A61F2/16 G02C7/04 G02C7/06 (Core/Invention)
CPC: A61F2/1602 G02C7/042 G02C7/045 A61F2/1613 G02C7/041 A61F2/1618 G02C7/04 G02C7/028 G02C7/06
European: A61F2/16A A61F2/16B2F G02C7/02D6 G02C7/04 G02C7/04B2 G02C7/06
US: 351/159.01 351/159.010S 351/159.15 351/168 351/177 623/6.11 623/6.110S 623/6.27 623/6.270P

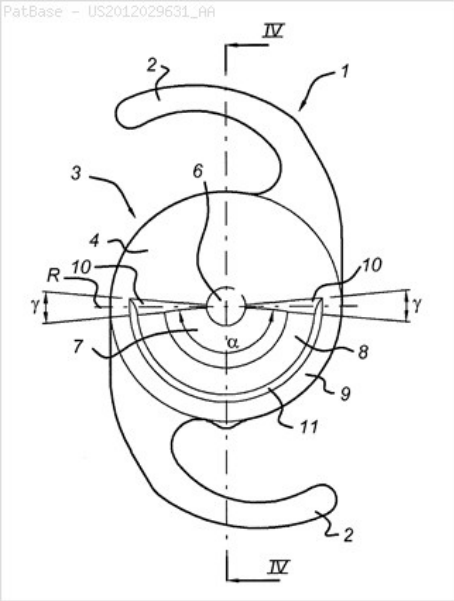

Family:

Publication number	Publication date	Application number	Application date
AT542165 E	20120215	AT20100153882T	20100217
AU2010216510 AA	20100826	AU20100216510	20100217
AU2010216510 BB	20150507	AU20100216510	20100217
CA2752794 AA	20110817	CA20102752794	20100217
CN102395917 A	20120328	CN201080017472	20100217
CN102395917 B	20140507	CN201080017472	20100217
CN103955075 A	20140730	CN201410126427	20100217
DE202010010365 U1	20110303	DE201020010365U	20100217
DK2219065 T3	20120507	DK20100153882T	20100217
EP2219065 A1	20100818	EP20100153882	20100217
EP2219065 B1	20120118	EP20100153882	20100217
EP2418535 A2	20120215	EP20110188888	20100217
EP2418535 A3	20120509	EP20110188888	20100217
EP2418535 B1	20140604	EP20110188888	20100217
EP2790052 A1	20141015	EP20140170812	20100217
EP2790052 B1	20150916	EP20140170812	20100217
ES2379529 T3	20120427	ES20100153882T	20100217
GB201011911 A0	20100901	GB20100011911	20100217
GB2483843 A1	20120328	GB20100011911	20100217
IL214710 A0	20111130	IL20110214710	20110817
IN05918CN2011 A	20121116	IN2011CN05918	20110817
JP2012517880 T2	20120809	JP20110551025T	20100217
JP2015062724 A2	20150409	JP20140247588	20141208
JP5663496 B2	20150204	JP20110551025T	20100217
KR20110132381 A	20111207	KR20117021806	20100217
MX2011008696 A1	20111129	MX20110008696	20110817
NL2002540 C	20100818	NL20092002540	20090217
PT2219065 T	20120427	PT20100153882T	20100217
RU2011138159 A	20130327	RU20110138159	20100217
RU2532240 C2	20141027	RU20110138159	20100217
US2012029631 AA	20120202	US20100201800	20100217
US2014172091 AA	20140619	US20140184791	20140220
US8696746 BB	20140415	US20100201800	20100217
WO10095938 A1	20100826	WO2010NL50078	20100217

Priority:

NL20092002540	20090217	US20090153044P	20090217	WO2010NL50078	20100217
EP20100153882	20100217	US20100201800	20100217	EP20110188888	20100217
US20110201800	20111018	US20140184791	20140220	JP20110551025	20100217

Probable Assignee: OCULENTIS HOLDINGS BV

Assignee(s): (std): OCULENTIS HOLDING BV ; WANDERS BERNARDUS FRANCISCUS MARIA ; WOLTERINCK WALTER BERNARDUS JOHANNES ; OCULENTS B V ; PROCORNEA HOLDING BV ; OCULENTS BV ; OCULENTIS HOLDINGS BV ; OKULENTIS KHOLDING BV ; OCULENTIS B V ; OCULENTIS BV

Assignee(s): OCULENTIS HOLDING B V ; PROCORNEA HOLDING B V

Inventor(s): (std): MARIA WANDERS BERNARDUS FRANCISCUS ; VANDERS BERNANDUS FRANTSISKUS MARIA ; VOL TERINK VAL TER BERNANDUS JOKHANES ; JOHANNES WOLTERINCK WALTER BERNARDUS ; LUCAS MARIA MANUEL RAMOS ; WANDERS BERNARDUS FRANCISCUS MARIA ; WOLTERINCK WALTER BERNARDUS JOHAN ; WOLTERINCK WALTER BERNARDUS JOHANNES

Inventor(s): MARIA MANUEL RAMOS LUCAS ; WALTER BERNARDUS JOHANNES WOLTERINCK ; BERNARDUS FRANCISCUS MARIA WANDERS

Agent(s): GRIFFITH HACK; BLAKE CASSELS AND GRAYDON LLP; KETELAARS MAARTEN F J M; HUTTER JACOBUS JOHANNES;

NEDERLANDSCH OCTROOIBUREAU; SUGHRUE MION PLLC; KETELAARS MAARTEN

Designated states: AE AG AL AM AO AT AU AZ BA BB BE BF BG BH BJ BR BW BY BZ CA CF CG CH CI CL CM CN CO CR CU CY CZ DE DK DM DO DZ EC EE EG ES FI FR GA GB GD GE GH GM GN GQ GR GT GW HN HR HU ID IE IL IN IS IT JP KE KG KM KN KP KR KZ LA LC LI LK LR LS LT LU LV LY MA MC MD ME MG MK ML MN MR MT MW MX MY MZ NA NE NG NI NL NO NZ OM PE PG PH PL PT RO RS RU SC SD SE SG SI SK SL SM SN ST SV SY SZ TD TG TH TJ TM TN TR TT TZ UA UG US UZ VC VN ZA ZM ZW

23) Family number: 46842108 (US2010234943A)

Title: NON-PROLATE ASPHERIC INTRAOCULAR LENS

Abstract: Source: US2010234943A An intraocular lens for implantation into a human eye is described. The lens has at least one aspheric surface configured with non-prolate profile to maintain lens optical advantage as compared with equivalent power spherical lens within realistic clinical condition of lens tilt and decentration.

Classifications:
International (IPC 8-9): A61F2/16 (Advanced/Invention); A61F2/16 (Core/Invention)
CPC: A61F2/1618 A61F2/1654 A61F2002/164 A61F2/164
European: A61F2/16B10 A61F2/16B2F K61F2/16B6A
US: 623/6.23 623/6.230S 623/6.24 623/6.240P

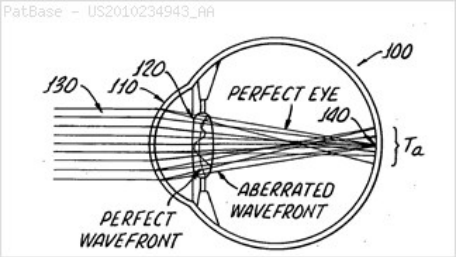

Family:

Publication number	Publication date	Application number	Application date
EP2405861 A1	20120118	EP20090841639	20091006
US2010234943 AA	20100916	US20090415742	20090331
US8894706 BB	20141125	US20090415742	20090331
WO10104530 A1	20100916	WO2009US59663	20091006

Priority:
US20090159369P 20090311 US20090415742 20090331 WO2009US59663 20091006

Probable Assignee: AAREN SCIENT INC
Assignee(s): (std): AAREN SCIENT INC ; PORTNEY VALDEMAR
Assignee(s): TEXAS CAPITAL BANK NATIONAL ASSOCIATION ; AAREN SCIENTIFIC INC
Inventor(s): (std): PORTNEY VALDEMAR
Agent(s): KOHLER SCHMID MOEBUS; WALTER A HACKLER PHD PATENT LAW OFFICE; HACKLER DAGHIGHIAN AND MARTINO; HACKLER WALTER A
Designated states: AE AG AL AM AO AT AU AZ BA BB BE BF BG BH BJ BR BW BY BZ CA CF CG CH CI CL CM CN CO CR CU CY CZ DE DK DM DO DZ EC EE EG ES FI FR GA GB GD GE GH GM GN GQ GR GT GW HN HR HU ID IE IL IN IS IT JP KE KG KM KN KP KR KZ LA LC LI LK LR LS LT LU LV LY MA MC MD ME MG MK ML MN MR MT MW MX MY MZ NA NE NG NI NL NO NZ OM PE PG PH PL PT RO RS RU SC SD SE SG SI SK SL SM SN ST SV SY SZ TD TG TJ TM TN TR TT TZ UA UG US UZ VC VN ZA ZM ZW

24) Family number: 48203834 (US2011019148A)

Title: MULTIFOCAL DIFFRACTIVE CONTACT LENS WITH BI-SIGN SURFACE SHAPE

Abstract: Source: US2011019148A A contact lens for placing over the eye is described. The lens has at least one non-spherical shape surface configured with bi-sign profile to maintain lens optical advantage as compared with equivalent far power spherical lens within common clinical condition of lens movement over the cornea of the eye.

Classifications:
International (IPC 8-9): G02C7/04 (Advanced/Invention)
CPC: G02C7/041 G02C7/042 G02C2202/20
European: G02C7/04B G02C7/04B2 S02C202/20
US: 351/159 351/159.01 351/159.03 351/159.06 351/159.060P 351/160R 351/161 351/177

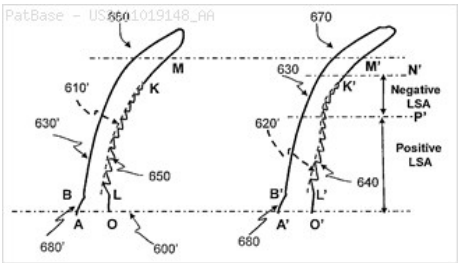

Family:

Publication number	Publication date	Application number	Application date
US2011019148 AA	20110127	US20090510172	20090727
US8128222 BB	20120306	US20090510172	20090727

Priority:

US20090510172 20090727

Probable Assignee: PORTNEY VALDEMAR
Assignee(s): (std): PORTNEY VALDEMAR
Inventor(s): (std): PORTNEY VALDEMAR
Agent(s): WALTER A HACKLER PHD PATENT LAW OFFICE; WALTER A

25) Family number: 49120296 (US2011149236A)

© PatBase

Title: SINGLE MICROSTRUCTURE LENS, SYSTEMS AND METHODS

Abstract: Source: US2011149236A Systems and methods for providing enhanced image quality across a wide and extended range of foci encompass vision treatment techniques and ophthalmic lenses such as contact lenses and intraocular lenses (IOLs). Exemplary IOL optics can include a circular surface structure which acts as a diffractive or phase shifting profile. In some cases, a single ring IOL includes an anterior face and a posterior face, where a profile can be imposed on the anterior or posterior surface or face. The profile can have an inner portion such as a microstructure or central echelette, and an outer portion. Between the inner portion and the outer portion, there may be a transition zone that connects the inner and outer portions.

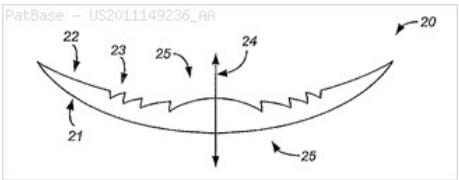

Classifications:
International (IPC 8-9): A61F2/14 A61F2/16 G02B5/18 G02C7/02 G02C7/04 G02C7/06 (Advanced/Invention);
A61F2/16 G02C7/04 G02C7/06 (Advanced/Non-invention)
CPC: A61F2/1624 G02C7/06 A61F2/1602 G02C7/049 G02C7/027 A61F2/1613 A61F2/1618 G02C7/041 A61F2/1645 G02C7/02 A61F2/1654 G02C7/04 G02C2202/02 G02C2202/20 A61F2002/1645 A61F2/16 G02C7/044 G02C2202/10
European: A61F2/16B10 A61F2/16B2F G02C7/02 G02C7/04 G02C7/04B K61F2/16B6T S02C202/02 S02C202/20
US: 351/159 351/159.01 351/159.010P 351/159.11 351/159.110P 351/159.15 351/159.35 351/159.44 351/159.52 351/159.54 351/159.73 351/159.74 351/159.740S 351/168 351/177 623/6.27

Family:

Publication number	Publication date	Application number	Application date
AU2010330799 AA	20110623	AU20100330799	20101217
AU2010330799 BB	20150219	AU20100330799	20101217
AU2010330809 AA	20110623	AU20100330809	20101217
AU2010330809 BB	20150122	AU20100330809	20101217
AU2010330826 AA	20110623	AU20100330826	20101217
AU2011343581 AA	20120621	AU20110343581	20111216
AU2012298703 AA	20130228	AU20120298703	20120824
CA2784771 AA	20120615	CA20102784771	20101217
CA2784782 AA	20120615	CA20102784782	20101217
CA2784794 AA	20120615	CA20102784794	20101217
CA2821968 AA	20130614	CA20112821968	20111216
CA2846235 AA	20140221	CA20122846235	20120824
CN102892380 A	20130123	CN201080064343	20101217
CN102892381 A	20130123	CN201080064347	20101217
EP2512370 A1	20121024	EP20100793126	20101217
EP2512371 A2	20121024	EP20100798906	20101217
EP2512372 A1	20121024	EP20100801327	20101217
EP2651334 A1	20131023	EP20110811448	20111216
EP2747706 A1	20140702	EP20120770302	20120824
IN05318CN2012 A	20140214	IN2012CN05318	20120618
IN05593CN2012 A	20140307	IN2012CN05593	20120626
JP2013514833 T2	20130502	JP20120544897T	20101217
JP2013515284 T2	20130502	JP20120544892T	20101217
US2011149236 AA	20110623	US20100971506	20101217
US2011317124 AA	20111229	US20100971889	20101217
US2011317126 AA	20111229	US20100971607	20101217
US2012320335 AA	20121220	US20110328292	20111216
US2013226294 AA	20130829	US20120594416	20120824
US2013235338 AA	20130912	US20130872784	20130429
US2013293836 AA	20131107	US20130934556	20130703
US2014371850 AA	20141218	US20140472815	20140829
US2015205145 AA	20150723	US20150589197	20150105
US8430508 BB	20130430	US20100971506	20101217
US8444267 BB	20130521	US20100971889	20101217
US8480228 BB	20130709	US20100971607	20101217
US8820927 BB	20140902	US20130934556	20130703
US8894204 BB	20141125	US20110328292	20111216
US8926092 BB	20150106	US20130872784	20130429
WO11075641 A2	20110623	WO2010US61017	20101217
WO11075641 A3	20110811	WO2010US61017	20101217
WO11075651 A1	20110623	WO2010US61042	20101217
WO11075668 A1	20110623	WO2010US61081	20101217
WO12083143 A1	20120621	WO2011US65433	20111216

Priority:

US20080120201	20080513	US20080197249	20080823	US20090288255P	20091218
US20090429155	20090423	US20090372573	20090217	US20100771550	20100430
US20100971506	20101217	US20100971889	20101217	US20100971607	20101217
US20100424433P	20101217	WO2010US61081	20101217	WO2010US61042	20101217
WO2010US61017	20101217	US20110526806P	20110824	US20110328292	20111216
WO2011US65433	20111216	US20120594416	20120824	US20130872784	20130429
US20130934556	20130703	WO2012US52311	20120824	US20140472815	20140829
US20150589197	20150105				

Probable Assignee: AMO GRONINGEN BV

Assignee(s): (std): AMO GRONINGEN BV ; CANOVAS VIDAL CARMEN ; WEEBER HENDRIK A ; CATLIN SCOTT J ; PIERS PATRICIA ANN ; LI KACCIE Y ; FRANSSEN LUUK ; WEEBER HENK A ; MOOREN MARRIE VAN D ; ABBOTT MEDICAL OPTICS INC

Assignee(s): AMO GRONINGEN B V ; PIERS PATRICIA A ; CATLIN SCOTT L

Inventor(s): (std): CANOVAS VIDAL CARMEN ; CATLIN SCOTT L ; FRANSSEN LUUK ; LI KACCIE Y ; MOOREN MARRIE VAN D ; PIERS PATRICIA A ; PIERS PATRICIA ANN ; WEEBER HENK A ; WEEBER HENDRIK A ; CATLIN SCOTT J

Inventor(s): WEEBER HENDRIK

Agent(s): DAVIES COLLISON CAVE; GOWLING LAFLEUR HENDERSON LLP; HOFFMANN EITLE; AMO GRONINGEN B V; AMO GRONINGEN BV; ABBOTT MEDICAL OPTICS INC; KIM ROY

Designated states: AE AG AL AM AO AT AU AZ BA BB BE BF BG BH BJ BR BW BY BZ CA CF CG CH CI CL CM CN CO CR CU CY CZ DE DK DM DO DZ EC EE EG ES FI FR GA GB GD GE GH GM GN GQ GR GT GW HN HR HU ID IE IL IN IS IT JP KE KG KM KN KP KR KZ LA LC LI LK LR LS LT LU LV LY MA MC MD ME MG MK ML MN MR MT MW MX MY MZ NA NE NG NI NL NO NZ OM PE PG PH PL PT QA RO RS RU RW SC SD SE SG SI SK SL SM SN ST SV SY SZ TD TG TH TJ TM TN TR TT TZ UA UG US UZ VC VN ZA ZM ZW

26) Family number: 49887576 (US2011270596A)

© PatBase

Title: APPARATUS, SYSTEM AND METHOD FOR PREDICTIVE MODELING TO DESIGN, EVALUATE AND OPTIMIZE OPHTHALMIC LENSES

Abstract: Source: US2011270596A An apparatus, system and method for predictive modeling to design, evaluate and optimize ophthalmic lenses is disclosed. Ophthalmic lenses may include, for example, contacts, glasses or intraocular lenses (IOLs). The apparatus, system and method may include a design tool for designing a lens for implantation in an eye having a plurality of characteristics, a simulator for simulating performance of the lens in at least one modeled eye having the plurality of characteristics, at least one input for receiving clinical performance of the lens in the eye having the plurality of characteristics, a comparator for comparing outcomes of the clinical performance and the simulated performance, and an optimizer for optimizing a subsequent one of the outcome of the clinical performance responsive to modification of the lens in accordance with modification to the simulated performance.

Classifications:
International (IPC 8-9): A61F2/16 G02C7/02 G02C7/04 G02C7/06 G06G7/48 G06G7/60 (Advanced/Invention)
CPC: G02C7/02 A61F2/16 G02C7/04 G02C7/041 G02C7/06
European: A61F2/16 G02C7/02 G02C7/04 G02C7/04B G02C7/06
US: 351/159.76 351/159.760S 351/177 703/11 703/11P 703/2 703/6

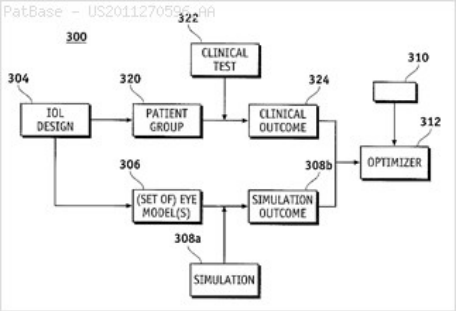

Family:

Publication number	Publication date	Application number	Application date
AU2011246966 AA	20111103	AU20110246966	20110429
AU2011246966 BB	20150402	AU20110246966	20110429
CA2797924 AA	20121030	CA20112797924	20110429
EP2564263 A1	20130306	EP20110724758	20110429
US2011270596 AA	20111103	US20100771550	20100430
US8862447 BB	20141014	US20100771550	20100430
WO11135449 A1	20111103	WO2011IB01067	20110429

Priority:
US20100771550 20100430 WO2011IB01067 20110429

Probable Assignee: AMO GRONINGEN BV
Assignee(s): (std): AMO GRONINGEN BV ; AMO REGIONAL HOLDINGS ; WEEBER HENDRIK A
Assignee(s): AMO GRONINGEN B V
Inventor(s): (std): WEEBER HENDRIK A
Agent(s): HOFFMANN EITLE; AMO GRONINGEN BV
Designated states: AE AG AL AM AO AT AU AZ BA BB BE BF BG BH BJ BR BW BY BZ CA CF CG CH CI CL CM CN CO CR CU CY CZ DE DK DM DO DZ EC EE EG ES FI FR GA GB GD GE GH GM GN GQ GR GT GW HN HR HU ID IE IL IN IS IT JP KE KG KM KN KP KR KZ LA LC LI LK LR LS LT LU LV LY MA MC MD ME MG MK ML MN MR MT MW MX MY MZ NA NE NG NI NL NO NZ OM PE PG PH PL PT RO RS RU SC SD SE SG SI SK SL SM SN ST SV SY SZ TD TG TH TJ TM TN TR TT TZ UA UG US UZ VC VN ZA ZM ZW

27) Family number: 50758598 (US2012059464A)

© PatBase

Title: MICROINCISION LENS

Abstract: Source: US2012059464A A foldable lens comprises an outer refractive surface portion comprising a first plurality of convexly curved refractive profile regions having positive optical power to converge light energy with refraction toward a focus on the retina. The convexly curved refractive profile regions of the outer region may correspond to at least about a quarter of the refractive power of the lens, such that the lens thickness is decreased substantially and the folded lens can fit through a small incision. The outer refractive surface portion focuses light with refraction, in focus images viewed through the outer portion of the lens can appear sharp to the patient. The outer refractive surface portion also comprises a second plurality of concavely curved refractive profile regions having negative optical power disposed between the first plurality, so as to diverge the light energy substantially away from the focus on the retina, such that visual artifacts are inhibited.

Classifications:
International (IPC 8-9): A61F2/16 A61F9/013 (Advanced/Invention)
CPC: A61F2/1656 A61F2/1613 A61F2/1654
European: A61F2/16B10 K61F2/16B10F
US: 623/6.28 623/6.280P

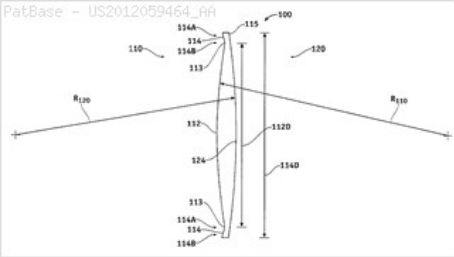

Family:

Publication number	Publication date	Application number	Application date
AU2011295739 AA	20120308	AU20110295739	20110902
AU2011295739 BB	20150319	AU20110295739	20110902
CA2810238 AA	20130301	CA20112810238	20110902
EP2611386 A1	20130710	EP20110767098	20110902
US2012059464 AA	20120308	US20100875850	20100903
US2015196389 AA	20150716	US20150668552	20150325
US8992611 BB	20150331	US20100875850	20100903
WO12031211 A1	20120308	WO2011US50342	20110902

Priority:
US20100875850 20100903 WO2011US50342 20110902 US20150668552 20150325

Probable Assignee: ABBOTT MEDICAL OPTICS INC

Assignee(s): (std): ABBOTT MEDICAL OPTICS INC ; ZHAO HUAWEI

Inventor(s): (std): ZHAO HUAWEI

Agent(s): HOFFMANN EITLE; ABBOTT MEDICAL OPTICS INC; KIM ROY

Designated states: AE AG AL AM AO AT AU AZ BA BB BE BF BG BH BJ BR BW BY BZ CA CF CG CH CI CL CM CN CO CR CU CY CZ DE DK DM DO DZ EC EE EG ES FI FR GA GB GD GE GH GM GN GQ GR GT GW HN HR HU ID IE IL IN IS IT JP KE KG KM KN KP KR KZ LA LC LI LK LR LS LT LU LV LY MA MC MD ME MG MK ML MN MR MT MW MX MY MZ NA NE NG NI NL NO NZ OM PE PG PH PL PT QA RO RS RU RW SC SD SE SG SI SK SL SM SN ST SV SY SZ TD TG TH TJ TM TN TR TT TZ UA UG US UZ VC VN ZA ZM ZW

28) Family number: 51245653 (US2012143326A)

© PatBase

Title: MULTIFOCAL LENS HAVING AN OPTICAL ADD POWER PROGRESSION, AND A SYSTEM AND METHOD OF PROVIDING SAME

Abstract: Source: US2012143326A An apparatus, system and method including an ophthalmic lens having an optic with an anterior surface, a posterior surface, and an optical axis. The ophthalmic lens further includes a first region having a first optical power and a second region having a second optical power. The ophthalmic lens further includes a third region having an optical power that progresses from the first optical power to the second optical power. The progression may be uniform or non-uniform. Each of the first, second and progression optical power may include a base power and an optical add power. Each of the first, second and progression regions may provide a first focus, a second focus and a plurality of third foci, respectively.

Classifications:
International (IPC 8-9): A61F2/16 G02C7/04 (Advanced/Invention)
CPC: G02C7/045 A61F2/1616 G02C7/042
European: A61F2/16B2 G02C7/04B2 G02C7/04B8
US: 623/6.27 623/6.270P

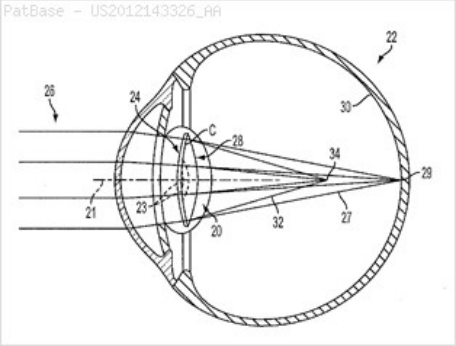

Family:

Publication number	Publication date	Application number	Application date
AU2011336183 AA	20120607	AU20110336183	20111201
AU2011336183 BB	20150716	AU20110336183	20111201
CA2819629 AA	20130531	CA20112819629	20111201
EP2646872 A1	20131009	EP20110815563	20111201
US2012143326 AA	20120607	US20110309314	20111201
WO12073112 A1	20120607	WO2011IB03000	20111201

Priority:

US20100418759P 20101201 US20110309314 20111201 WO2011IB03000 20111201

Probable Assignee: ABBOTT MEDICAL OPTICS INC

Assignee(s): (std): AMO GRONINGEN BV ; CANOVAS VIDAL CARMEN ; MOOREN MARRIE H VAN D ; WEEBER HENDRIK A ; VAN DER MOOREN MARRIE H

Assignee(s): ABBOTT MEDICAL OPTICS INC ; AMO GRONINGEN B V

Inventor(s): (std): CANOVAS VIDAL CARMEN ; MOOREN MARRIE H VAN D ; VAN DER MOOREN MARRIE H ; WEEBER HENDRIK A

Agent(s): HOFFMANN EITLE; SIEGERT G DR ET AL

Designated states: AE AG AL AM AO AT AU AZ BA BB BE BF BG BH BJ BR BW BY BZ CA CF CG CH CI CL CM CN CO CR CU CY CZ DE DK DM DO DZ EC EE EG ES FI FR GA GB GD GE GH GM GN GQ GR GT GW HN HR HU ID IE IL IN IS IT JP KE KG KM KN KP KR KZ LA LC LI LK LR LS LT LU LV LY MA MC MD ME MG MK ML MN MR MT MW MX MY MZ NA NE NG NI NL NO NZ OM PE PG PH PL PT QA RO RS RU RW SC SD SE SG SI SK SL SM SN ST SV SY SZ TD TG TH TJ TM TN TR TT TZ UA UG US UZ VC VN ZA ZM ZW

29) Family number: 51246710 (US2012296422A)

© PatBase

Title: METHOD FOR DESIGNING, EVALUATING AND OPTIMIZING OPHTHALMIC LENSES AND LASER VISION CORRECTION

Abstract: Source: US2012296422A The present invention relates generally to lens design and, more particularly, to a method for designing, evaluating and optimizing ophthalmic lenses and laser vision correction in order to optimally manage issues resulting from, or related to, halos.

Classifications:
International (IPC 8-9): A61B3/00 A61F2/16 G02C7/02 (Advanced/Invention)
CPC: A61F2/1613 A61B3/0025 A61F2/1637 G02C7/027 G02C2202/22
European: A61F2/16B6 G02C7/02D4 S02C202/22
US: 351/159.77 623/6.11

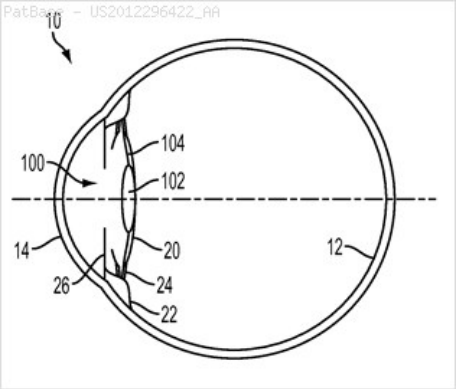

Family:

Publication number	Publication date	Application number	Application date
AU2011337014 AA	20120607	AU20110337014	20111115
CA2819451 AA	20130530	CA20112819451	20111115
EP2646871 A1	20131009	EP20110793906	20111115
US2012296422 AA	20121122	US20110297103	20111115
US2014081395 AA	20140320	US20130080499	20131114
WO12074742 A1	20120607	WO2011US60842	20111115

Priority:

US20100418234P 20101130 US20110297103 20111115 WO2011US60842 20111115 US20130080499 20131114

Probable Assignee: AMO GRONINGEN BV

Assignee(s): (std): AMO GRONINGEN BV ; WEEBER HENDRIK A

Inventor(s): (std): WEEBER HENDRIK A

Agent(s): HOFFMANN EITLE; KIM ROY

Designated states: AE AG AL AM AO AT AU AZ BA BB BE BF BG BH BJ BR BW BY BZ CA CF CG CH CI CL CM CN CO CR CU CY CZ DE DK DM DO DZ EC EE EG ES FI FR GA GB GD GE GH GM GN GQ GR GT GW HN HR HU ID IE IL IN IS IT JP KE KG KM KN KP KR KZ LA LC LI LK LR LS LT LU LV LY MA MC MD ME MG MK ML MN MR MT MW MX MY MZ NA NE NG NI NL NO NZ OM PE PG PH PL PT QA RO RS RU RW SC SD SE SG SI SK SL SM SN ST SV SY SZ TD TG TH TJ TM TN TR TT TZ UA UG US UZ VC VN ZA ZM ZW

30) Family number: 48899115 (US2013345807A)

Title: METHODS OF PREDICTING THE POST-OPERATIVE POSITION OF AN IOL AND USES OF SUCH METHODS

Abstract: Source: US2013345807A The invention relates to the field of ophthalmic systems and procedures. In particular, the invention relates to the determination of the post-operative position of an intraocular lens (termed "IOL") in an eye of a patient undergoing lens replacement surgery, which involves determining the position of the existing crystalline lens in the pre-operative eye of the patient and using that information and a single numerical constant to predict the post-operative intraocular lens position. Related methods, and computer programs for performing the methods of the invention, are also disclosed.

Classifications:
International (IPC 8-9): A61B19/00 A61B3/00 A61B3/10 A61B5/107 A61B8/10 A61F2/16 A61F9/007 A61F9/008 (Advanced/Invention)
CPC: A61B3/0025 A61B8/0858 A61B8/10 A61F2240/002 A61B3/1005 A61B5/1075 A61F9/007 A61F9/008 A61B19/50 A61B5/1072 A61F2/16
European: A61B3/00C1 A61B5/107B A61B8/08J A61B8/10 K61F2/16 K61F240/00M2
US: 623/6.11

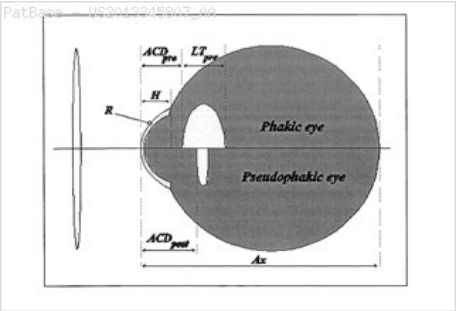

Family:

Publication number	Publication date	Application number	Application date
AU2012224545 AA	20120913	AU20120224545	20120308
CA2829143 AA	20130905	CA20122829143	20120308
CN103533882 A	20140122	CN201280022536	20120308
DE12709826 T1	20140220	DE20120709826T	20120308
EP2683287 A1	20140115	EP20120709826	20120308
GB201103970 A0	20110420	GB20110003970	20110309
GB2488802 A1	20120912	GB20110003970	20110309
GB2488802 B2	20130918	GB20110003970	20110309
JP2014518643 T2	20140807	JP20130557096T	20120308
KR20140038951 A	20140331	KR20137026659	20120308
RU2013145070 A	20150627	RU20130145070	20120308
SG193339 A1	20131030	SG20130006714	20120308
US2013345807 AA	20131226	US20120003151	20120308
WO12120080 A1	20120913	WO2012EP54010	20120308

Priority:
GB20110003970 20110309 WO2012EP54010 20120308 EP20120709826 20120308

Probable Assignee: IOL INNOVATIONS APS
Assignee(s): (std): IOL INNOVATIONS APS ; OLSEN THOMAS
Inventor(s): (std): OLSEN THOMAS
Inventor(s): THOMAS OLSEN
Agent(s): WRAYS; BERESKIN AND PARR LLP SENCRL SRL; POTTER CLARKSON LLP; DIDMON MARK
Designated states: AE AG AL AM AO AT AU AZ BA BB BE BF BG BH BJ BR BW BY BZ CA CF CG CH CI CL CM CN CO CR CU CY CZ DE DK DM DO DZ EC EE EG ES FI FR GA GB GD GE GH GM GN GQ GR GT GW HN HR HU ID IE IL IN IS IT JP KE KG KM KN KP KR KZ LA LC LI LK LR LS LT LU LV LY MA MC MD ME MG MK ML MN MR MT MW MX MY MZ NA NE NG NI NL NO NZ OM PE PG PH PL PT QA RO RS RU RW SC SD SE SG SI SK SL SM SN ST SV SY SZ TD TG TH TJ TM TN TR TT TZ UA UG US UZ VC VN ZA ZM ZW

31) Family number: 52608769 (US8342688B)

© PatBase

Title: MULTIFOCAL CAPABLE OPHTHALMIC ABERROMETER

Abstract: Source: US8342688B A multifocal capable ophthalmic aberrometer has an afocal relay defining an optical axis, an object plane, and an image plane. The image plane is conjugated to the object plane. A probe **beam** is projected along the optical axis and is propagated toward the object plane. Reflection of the probe **beam** from a subject eye located at the object plane generates a wavefront emerging from the object plane. A Hartmann-Shack sensor positioned at the image plane and produces an image of Hartmann-Shack spots of the wavefront. A control electronics acquires the images of the Hartmann-Shack spots in a single measurement. A processing electronics calculates an optical power map of the subject eye with respect to a center of the wavefront and averages the optical power map over the images.

Classifications:
International (IPC 8-9): A61B3/04 A61B3/10 (Advanced/Invention)
CPC: A61B3/1015
US: 351/205 351/221 351/228

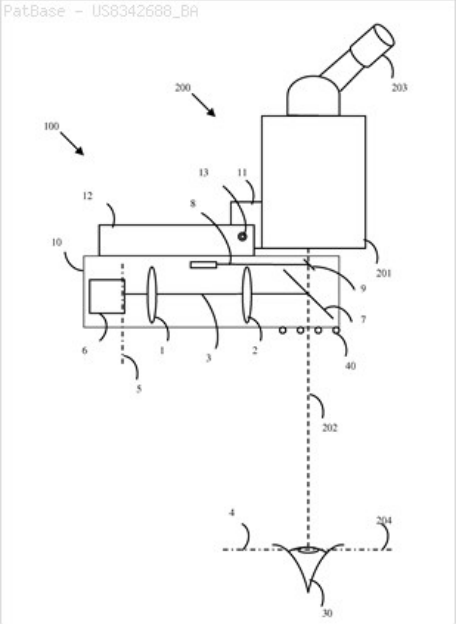

Family:

Publication number	Publication date	Application number	Application date
US8342688 BA	20130101	US20100815107	20100614

Priority:
US20090268711P 20090615 US20100815107 20100614

Probable Assignee: SWINGER CASIMIR ANDREW
Assignee(s): (std): SWINGER CASIMIR ANDREW
Inventor(s): (std): SWINGER CASIMIR ANDREW

32) Family number: 53988721 (US2013335701A)

© PatBase

Title: LENSES, SYSTEMS AND METHODS FOR PROVIDING CUSTOM ABERRATION TREATMENTS AND MONOVISION TO CORRECT PRESBYOPIA

Abstract: Source: US2013335701A A lens, system and/or method for providing custom ocular aberrations for enhanced higher visual acuity. Scaled versions of a patient's aberration pattern may either attenuate or amplify the overall amount of ocular aberrations, to either correct or partially correct a patient's aberrations leading to enhanced visual acuity and/or extended depth of focus. This may be binocularly applied in order to provide high visual acuity in a patient at least at near, far and intermediate distances. The method may include obtaining an optimized binocular summation of both eyes of the patient; designing a first lens solution to correct or partially correct the dominant eye's aberrations according to an attenuated scaled version of a patient's ocular aberrations in the dominant eye; and designing a second lens solution to provide an additional customized extension of depth of focus by the induction of scaled patterns of ocular aberrations in the non dominant eye.

Classifications:
International (IPC 8-9): A61F2/14 A61F2/16 G02C7/02 G02C7/04 (Advanced/Invention)
CPC: G02C7/027 G02C7/04 G02C2202/22 G02C7/028 G02C7/02 A61F2/145 A61F2/16
US: 351/159.74 351/159.77

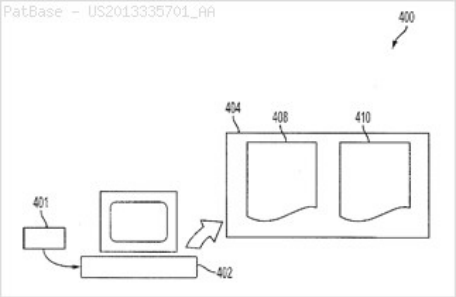

Family:

Publication number	Publication date	Application number	Application date
AU2012346864 AA	20130606	AU20120346864	20121130
CA2857593 AA	20140530	CA20122857593	20121130
EP2786201 A1	20141008	EP20120834567	20121130
US2013335701 AA	20131219	US20120690505	20121130
WO13080053 A1	20130606	WO2012IB02937	20121130

Priority:
US20110565831P 20111201 US20120690505 20121130 WO2012IB02937 20121130

Probable Assignee: AMO GRONINGEN BV
Assignee(s): (std): AMO GRONINGEN BV ; CANOVAS VIDAL CARMEN ; PIERS PATRICIA ANN ; WEEBER HENDRIK A
Assignee(s): AMO GRONINGEN BVVAN SWIETENLAAN 5NL-9728 NXGRONINGENNL ; AMO GRONINGEN B V
Inventor(s): (std): CANOVAS VIDAL CARMEN ; PIERS PATRICIA ANN ; WEEBER HENDRIK A
Inventor(s): WEEBER HENDRIK ANL ; PIERS PATRICIA ANNNL ; CANOVAS VIDAL CARMENNL
Agent(s): HOFFMANN EITLE; SIEGERT G
Designated states: AE AG AL AM AO AT AU AZ BA BB BE BF BG BH BJ BN BR BW BY BZ CA CF CG CH CI CL CM CN CO CR CU CY CZ DE DK DM DO DZ EC EE EG ES FI FR GA GB GD GE GH GM GN GQ GR GT GW HN HR HU ID IE IL IN IS IT JP KE KG KM KN KP KR KZ LA LC LI LK LR LS LT LU LV LY MA MC MD ME MG MK ML MN MR MT MW MX MY MZ NA NE NG NI NL NO NZ OM PA PE PG PH PL PT QA RO RS RU RW SC SD SE SG SI SK SL SM SN ST SV SY SZ TD TG TH TJ TM TN TR TT TZ UA UG US UZ VC VN ZA ZM ZW

33) Family number: 55003530 (WO13159076A2) © PatBase

Title: VISION ENHANCEMENT SYSTEMS AND METHODS

Abstract: Vision enhancement systems and methods facilitate determining or estimating an optical alignment of a lens in relation to the visual axis of an eye and applying the optical alignment to an action or process of providing, facilitating, and/or presenting one or more ophthalmic assessments.

Classifications:
International (IPC 8-9): A61B3/10 (Advanced/Invention)
CPC: A61B3/0025

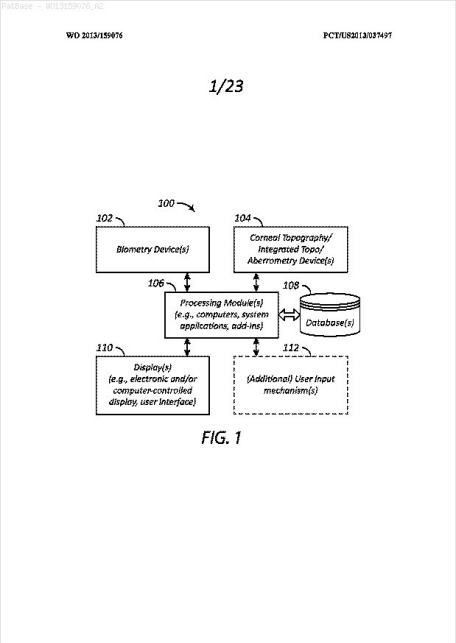

Family:

Publication number	Publication date	Application number	Application date
WO13159076 A2	20131024	WO2013US37497	20130419
WO13159076 A3	20140320	WO2013US37497	20130419

Priority:
US20120635825P 20120419

Probable Assignee: HOYA CORP
Assignee(s): (std): ANELLO ROBERT D ; HOYA CORP
Inventor(s): (std): ANELLO ROBERT D
Agent(s): HOLMES PETER L
Designated states: AE AG AL AM AO AT AU AZ BA BB BE BF BG BH BJ BN BR BW BY BZ CA CF CG CH CI CL CM CN CO CR CU CY CZ DE DK DM DO DZ EC EE EG ES FI FR GA GB GD GE GH GM GN GQ GR GT GW HN HR HU ID IE IL IN IS IT JP KE KG KM KN KP KR KZ LA LC LK LR LS LT LU LV LY MA MC MD ME MG MK ML MN MR MT MW MX MY MZ NA NE NG NI NL NO NZ OM PA PE PG PH PL PT QA RO RS RU RW SC SD SE SG SI SK SL SM SN ST SV SY SZ TD TG TH TJ TM TN TR TT TZ UA UG US UZ VC VN ZA ZM ZW

34) Family number: 55480248 (US2015103312A)

Title: PROCESS FOR DETERMINING A PAIR OF PROGRESSIVE OPHTHALMIC LENSES

Abstract: Source: US2015103312A A process for determining a pair of personalized progressive ophthalmic lenses. and a computer program product associated to these processes. Right-handed persons and left-handed persons behave very differently when executing certain near vision tasks, such as writing on a sheet of paper. However, current lens designs do not take into account these behaviour differences. The comfort of wearing a pair of ophthalmic lenses can be improved for the wearer for whom the lenses are intended by adapting his near vision according to his handedness.

Classifications:
International (IPC 8-9): A61B3/00 G02C1/00 G02C13/00 G02C7/02 G02C7/06 G06Q30/06 (Advanced/Invention)
CPC: G02C7/063 G06Q30/0621 A61B3/0025 G02C7/061 G02C13/005 G02C2202/04 G02C7/025 G02C7/028 G02C7/06 G06Q30/0633 G02C7/066 G02C7/021 G02C7/027
US: 351/159.42 351/159.43 351/159.74 351/159.77 351/204 351/246 705/26.8

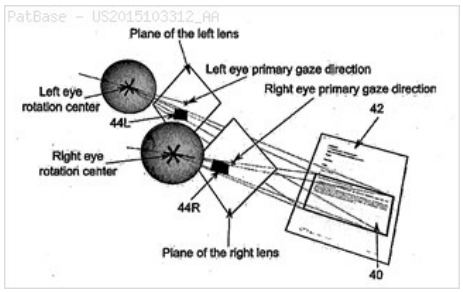

Family:

Publication number	Publication date	Application number	Application date
AU2013283260 AA	20140103	AU20130283260	20130628
AU2013283264 AA	20140103	AU20130283264	20130628
AU2013283265 AA	20140103	AU20130283265	20130628
CA2873504 AA	20141113	CA20132873504	20130628
CA2873506 AA	20141113	CA20132873506	20130628
CA2873522 AA	20141113	CA20132873522	20130628
CN104380178 A	20150225	CN201380026791	20130628
CN104380179 A	20150225	CN201380026820	20130628
CN104380180 A	20150225	CN201380026879	20130628
EP2867720 A1	20150506	EP20130732167	20130628
EP2867721 A1	20150506	EP20130732503	20130628
EP2867722 A1	20150506	EP20130734991	20130628
IN02460MN2014 A	20150710	IN2014MN02460	20141203
JP2015521758 T2	20150730	JP20150519127T	20130628
JP2015522844 T2	20150806	JP20150519107T	20130628
JP2015522846 T2	20150806	JP20150519128T	20130628
US2015103312 AA	20150416	US20130402276	20130628
US2015124214 AA	20150507	US20130401800	20130628
US2015146164 AA	20150528	US20130402237	20130628
WO14001490 A1	20140103	WO2013EP63602	20130628
WO14001494 A1	20140103	WO2013EP63607	20130628
WO14001495 A1	20140103	WO2013EP63608	20130628

Priority:

EP20120305772	20120629	EP20130305189	20130220	EP20130305191	20130220
WO2013EP63607	20130628	WO2013EP63608	20130628	WO2013EP63602	20130628
EP20130732167	20130628	EP20130732503	20130628	EP20130734991	20130628

Probable Assignee: ESSILOR INT COMPAGNIE GENERALE D OPTIQUE

Assignee(s): (std)**:** ESSILOR INT CIE GENERALE D OPTIQUE ; ESSILOR INT CIE GERERALE G OPTIQUE ; ESSILOR INT

Assignee(s): ESSILOR INT COMPAGNIE GENERALE D OPTIQUE ; CONTET AUDE ; ESSILOR INT COMPAGNIE GERERALE G OPTIQUE ; ESSILOR INT COMP GENERALE DOPTIQUE ; VIALET STEPHANIE ; POULAIN ISABELLE ; PAILLE DAMIEN ; ROUSSEAU BENJAMIN ; ESSILOR INT COMPAGNIE GENERALE D OPTIQUE ; ESSILOR INT COMPAGNIE GENERALE D OPTIQUE147, RUE DE PARISF-94220CHARENTON LE PONTFR ; GUILLOUX CYRIL ; KARIOTY FARID

Inventor(s): (std)**:** CONTET AUDE ; GUILLOUX CYRIL ; KARIOTY FARID ; PAILLE DAMIEN ; POULAIN ISABELLE ; ROUSSEAU BENJAMIN ; VIALET STEPHANIE

Inventor(s): VIALET STEPHANIEFR ; VIALET STPHANIE ; ROUSSEAU BENJAMINFR ; POULAIN ISABELLEFR ; PAILLE DAMIENFR ; KARIOTY FARIDFR ; GUILLOUX CYRILFR ; CONTET AUDEFR

Agent(s): CABINET PLASSERAUD; BOUROUT GAELLE ET AL

Designated states: AE AG AL AM AO AT AU AZ BA BB BE BF BG BH BJ BN BR BW BY BZ CA CF CG CH CI CL CM CN CO CR CU CY CZ DE DK DM DO DZ EC EE EG ES FI FR GA GB GD GE GH GM GN GQ GR GT GW HN HR HU ID IE IL IN IS IT JP KE KG KM KN KP KR KZ LA LC LI LK LR LS LT LU LV LY MA MC MD ME MG MK ML MN MR MT MW MX MY MZ NA NE NG NI NL NO NZ OM PA PE PG PH PL PT QA RO RS RU RW SC SD SE SG SI SK SL SM SN ST SV SY SZ TD TG TH TJ TM TN TR TT TZ UA UG US UZ VC VN ZA ZM ZW