SUPERINTENDENCIA DE INDUSTRIA Y COMERCIO	
RAD: 13-258834- -2	**FECHA**: 2015-12-21 11:58:12
DEP: 2020 DIRECCION DE NUEVAS CREACIONES	**EVE:** 1 REGISTRO/DEPOSITO/CONCESION/DEPOSITO
TRA: 2 PATENTES DE INVENCION	**FOLIOS**: 4
ACT: 519 TRASLADOINFORME	

DIRECCIÓN DE NUEVAS CREACIONES

2020
Bogotá, D.C.,

Abogado(a)/Señor(a)
LUZ CLEMENCIA DE PÁEZ

Asunto: Radicación: 13-258834- -2
Trámite: 2
Evento: 1
Actuación: 519
Oficio: 15462
Folios: 4

Patente de Invención	**X**			Patente de Modelo de Utilidad	
Vía Nacional	**X**				
Vía PCT (Fase Nacional)		Capítulo I		Capítulo II	
No. Solicitud Internacional					
Fecha de Presentación Internacional					

Como resultado del examen de fondo realizado, con fundamento en el Artículo 45 de la Decisión 486 de la Comisión de la Comunidad Andina, se comunica:

1. Documentos estudiados

Descripción:	Rad. N° 13-258834-00000-0000	31/octubre/2013
Reivindicaciones:	Rad. N° 13-258834-00000-0000	31/octubre/2013

2. Objeto de la invención

De acuerdo con lo establecido en el numeral 1.2.2.2 del Capítulo Primero del Título X de la Circular Única para efectos del examen de patentabilidad, se tendrá en cuenta la tasa pagada por el solicitante al momento de comenzar el examen para las reivindicaciones adicionales; esto es que cuando la solicitud contenga más de diez (10) reivindicaciones y no se haya pagado la tasa complementaria, sólo se estudiarán las cubiertas por la tasa pagada. Por lo tanto, se estudiarán las reivindicaciones 1 a 8.

Título de la solicitud: “Transporte de turbocombustible Jet A-1 en una tubería donde transportan mezclas diesel-biodiesel” (Ver página 1 del radicado Nº 13-258834-00000-0000).

El problema planteado en esta solicitud consiste en la necesidad de proporcionar procedimientos útiles para el transporte de turbo combustible para aviones Jet A-1 en el mismo poliducto donde se transportan mezclas de diesel-biodiesel, asegurando que

Superintendencia de Industria y Comercio: Cra 13 No. 27-00 pisos 1, 3, 4, 5, 6, 7 y 10 - PBX: (571) 5870000
E-mail: contactenos@sic.gov.co - Bogotá D.C., Colombia.
Señor ciudadano la entidad le ofrece los siguientes canales para hacer seguimiento a su solicitud así:
Página web: www.sic.gov.co
Centro de atención telefónica en Bogotá: 5920400
Línea gratuita a nivel nacional: 018000 910165
Kiosco Informático Centro Comercial Gran Estación en Bogotá
MINCOMERCIO INDUSTRIA Y TURISMO

cumpla con el contenido máximo de esteres metílicos de ácidos grasos, FAME por sus siglas en inglés, permitido por la normatividad internacional de 4,5 ppm.

Para resolver este problema técnico, la solicitud en estudio proporciona un procedimiento para transportar por un mismo ducto una mezcla de diesel-biodiesel y un turbocombustible para aviones Jet A-1, en donde la mezcla diésel-biodiesel (…) caracterizado porque comprende las siguientes etapas: a) enviar por el poliducto la mezcla diesel-biodiesel a ser transportada, b) enviar por el poliducto queroseno hidrotratado libre de biodiesel, c) durante el despacho de dicho queroseno hidrotratado en la cabeza del volumen de Jet A-1, d) enviar por el poliducto un volumen mínimo de 795 m^3 de Jet-A1, e) enviar por el poliducto queroseno hidrotratado libre de biodiesel, g) repetir las etapas del literal (c) en las plantas intermedias o de rebombeo del poliducto, f) reprogramar las alarmas de cambio de producto, h) direccionar la interface y el volumen de seguridad a un tanque de almacenamiento de mezclas diesel-biodiesel, i) recibir el Jet-A1 en un tanque de almacenamiento específico para ese producto.

El objeto de la presente solicitud se relaciona con la Clasificación Internacional de Patentes (CIP): F17D 003/003 // 001/008 // 001/017.

3. De la solicitud de patente

Titulo

El título no permite distinguir el objeto a proteger, por lo tanto, es necesario cambiar el título, siendo este coincidente con el preámbulo de las reivindicaciones, por ejemplo el título podría ser “Procedimiento para transportar por un mismo ducto una mezcla de diesel-biodiesel y un turbocombustible para aviones Jet A-1”.

Reivindicaciones (Art 30 D 486, Art 22 PCT)

Durante la evaluación de claridad y concisión de las reivindicaciones, esta Oficina encontró que:

- Las reivindicaciones 1 y 5, no son claras porque presentan resultados a obtener “*para asegurar un contenido de FAME menor o igual a 4.5 ppm*”,” *“al finalizar el proceso de transporte, el turbocombustible Jet-A1 presenta un contenido de ésteres metílicos de ácidos grasos (FAME) máximo de 4,5 ppm*”, lo cual no es permitido, puesto que las citadas reivindicaciones incluirían no sólo la solución propuesta por el solicitante, sino todas las alternativas presentes o futuras que lleguen a ese resultado.

- Las reivindicaciones 1 y 4 a 8 no son claras porque presentan términos indefinidos y/o imprecisos “*máximo(a)*”, “*mínimo*”, *“mayor”, “inferior”, “superior”, “menor o igual”, “al menos”,* utilizados para definir el rango de varias características del procedimiento deben eliminarse. Estos términos no permiten establecer un intervalo puntual para cada una de las características técnicas, no siendo estas precisas y por lo tanto no claras, ya que no permiten una comparación con el estado de la técnica. Se sugiere sustituirlas por un término preciso o un rango concreto.

- La reivindicación 1, referida a un procedimiento se incluyen características funcionales *“para permitir que después de la operación el equipo quede cargado con el producto libre de biodiesel*”, no se tendrán en cuenta para el estudio ya que dichas características si bien se pueden incluir para brindar claridad al objeto a proteger, no le pueden dar novedad ni nivel inventivo a la invención. Las reivindicaciones deben caracterizar el proceso por una secuencia de etapas técnicas con sus condiciones (materias primas, equipos, temperaturas, flujos, presiones, etc.), por medio de las cuales se transforme una materia en un producto o se obtenga un resultado.

Superintendencia de Industria y Comercio: Cra 13 No. 27-00 pisos 1, 3, 4, 5, 6, 7 y 10 - PBX: (571) 5870000
E-mail: contactenos@sic.gov.co - Bogotá D.C., Colombia.
Señor ciudadano la entidad le ofrece los siguientes canales para hacer seguimiento a su solicitud así:
Página web: www.sic.gov.co | Línea gratuita a nivel nacional: 018000 910165
Centro de atención telefónica en Bogotá: 5920400 | Kiosco Informático Centro Comercial Gran Estación en Bogotá
MINCOMERCIO INDUSTRIA Y TURISMO

4. Determinación del Estado de la Técnica

El estado de la técnica se determinó con base en la fecha de presentación de la solicitud de patente nacional, es decir, 31 de octubre de 2013.

Consultadas las fuentes de información con que se cuenta, no se encontraron documentos relevantes que anticipen el objeto de esta solicitud y que afecte su patentabilidad. Por tanto, se sugiere atender juiciosamente a las observaciones sugeridas para continuar el trámite de esta solicitud.

5. Conclusión

Dado que las reivindicaciones 1 a 8 no se encuentran divulgadas en el estado de la técnica y tienen novedad y nivel inventivo, cumpliendo con los requisitos del artículo 16 y 18 de la decisión 486. Sin embargo, es necesario que el capítulo reivindicatorio sea modificado porque se encuentra afectado por claridad según artículo 30 de la decisión 486.

Superintendencia de Industria y Comercio: Cra 13 No. 27-00 pisos 1, 3, 4, 5, 6, 7 y 10 - PBX: (571) 5870000
E-mail: contactenos@sic.gov.co - Bogotá D.C., Colombia.
Señor ciudadano la entidad le ofrece los siguientes canales para hacer seguimiento a su solicitud así:
Página web: www.sic.gov.co
Línea gratuita a nivel nacional: 018000 910165
Centro de atención telefónica en Bogotá: 5920400
Kiosco Informático Centro Comercial Gran Estación en Bogotá
MINCOMERCIO INDUSTRIA Y TURISMO

En cumplimiento del artículo 45 de la Decisión 486 de la Comisión de la Comunidad Andina, se le indica que debe dar respuesta dentro del término de sesenta (60) días contados a partir del día siguiente de la fecha de notificación de la presente comunicación. En caso de no dar respuesta al presente requerimiento, o si a pesar de la respuesta subsistieran los impedimentos para la concesión, se denegará la patente.

Se invita al solicitante se sirva indicar, si así lo considera, su renuncia al término faltante de sesenta (60) días para dar respuesta a este requerimiento y presentarla por escrito.

Finalmente, se le recuerda al solicitante que si como respuesta a este requerimiento llegara a modificar el capítulo reivindicatorio y éste contenga más de diez (10) reivindicaciones, no pagará la tasa de modificación voluntaria pero sí la correspondiente al pago por reivindicación adicional.

Notifíquese el presente oficio conforme a lo dispuesto en el numeral 5.2, literal e), del capítulo quinto del título primero de la Circular Única No. 10 de 2001.

JOSÉ LUIS SALAZAR LÓPEZ
Director de Nuevas Creaciones (c)

El anterior requerimiento fue notificado por fijación en lista, de fecha 2015-12-29

Elaboró: Yenny Marcela Campos Borda
Revisó: Rosa Patricia Tellez Chavarro

Superintendencia de Industria y Comercio: Cra 13 No. 27-00 pisos 1, 3, 4, 5, 6, 7 y 10 - PBX: (571) 5870000
E-mail: contactenos@sic.gov.co - Bogotá D.C., Colombia.
Señor ciudadano la entidad le ofrece los siguientes canales para hacer seguimiento a su solicitud así:
Página web: www.sic.gov.co
Centro de atención telefónica en Bogotá: 5920400
Línea gratuita a nivel nacional: 018000 910165
Kiosco Informático Centro Comercial Gran Estación en Bogotá
MINCOMERCIO INDUSTRIA Y TURISMO

Yenny Campos

Search history

Search 1: TAC=(jet A-1 and kerosene and biodiesel and pipeline) (Results 0)
Search 2: TAC=(jet A-1 and kerosene and pipeline) (Results 0)
Search 3: TAC=(turbofuel and kerosene and pipeline) (Results 0)
Search 4: TAC=(jet and kerosene and pipeline) (Results 35)
Search 5: TAC=(jet and kerosene and pipeline and transport) (Results 14)
Search 6: TAC=(jet and kerosene and pipeline and transport and biodiesel) (Results 3)
Search 7: TAC=(jet and kerosene and pipeline and transport and biodiesel) (Results 3)

2) Family number: 20134699 (GB743713A)

© PatBase

Title: Improvements in or relating to vessels for carrying bulk oil

Abstract: Source: GB743713A 743,713. Tankers. SHELL REFINING and MARKETING CO., Ltd. Dec. 22, 1953 [Jan. 13, 1953], No. 1042/53.. Class 113. [Also in Group I] In a vessel for carrying bulk oil in a tank or tanks having means for washing the tanks and also for causing the oil and/or sludge removed by the washing operation to separate from the washing water, means are provided for so collecting and storing the separated oil and/or cludge that it is isolated from the oil carried as qargo and also from the ballast until subsesuently discharged from the vessel to a disposal installation, means also being provided for separating oil and/or sludge from the ballast water of ballasted oil carrying tanks and for collecting, storing and disposing of this oil and/or sludge with, or in the same manner as the oil and/or sludge from the tank washing operation. The vessel has centre tanks 1c, 2c, 3c, 4c, 5c, 7c, 8c, 9c, 10c for cargo with port and starboard cargo wing tanks 2p, 3p, 6p, 8p, 9p and 2s, 3s, 6s, 8s, 9s which may be put in communication with their adjacent cargo centre tanks by means of levelling valves 2l, 3l, 8l and 9l. The wing tanks 1p, 4p, 5p, 7p, 10p and 1s, 4s, 5s, 7s, 10s are for clean water ballast and each has a valve 17v therein for communication with the ballast water line 17p-17s. A cargo stripping line 18 has transverse branches 18t and valves 18v permit communication between all cargo tanks and this stripping line. Oil cargo lines 19, 20 and 22 which may be connected by valves 21 and 23 supply cargo directly to the centre cargo tanks through valves 19v, 20v and 22v respectively and indirectly to the wing cargo tanks through valves 2l, 3l, 8l, 9l. The midships centre tank 6c (see also Figs. 2 and 3) comprises a fresh washing water compartment 11, two separation compartments 12p and 12s, a sludge compartment 13, a sludge pump room 14 and a sump 15 with a valve 15v which provides communication between the sea and the piping system. The longitudinal bulkheads 25 which divide the separation compartments from the sludge compartment 13 are topped by sill plates 26 which leave clearance for the contents of the separation compartments to spill over into the sludge compartment. Immediately aft of the tank 10c is the cargo pump room 16. When cargo wing tanks are ballasted, oil left in the tanks will float on the water. To empty these tanks the ballast water is run down to sea level, the bulk of the remainder then being discharged overboard by the cargo stripping pumps or the sludge pump via the cargo stripping line 18 and sea valve 15v. The liquid then remaining is discharged into the sludge compartment where oil floats on the water which is discharged overboard by the sludge pump after the mixture has been heated to effect separation if necessary. To wash the cargo tanks wash water is delivered from the compartment to the washing machines. The mixture of oil and water then extracted from the cargo tanks enters the separation compartments through an upwardly directed pipe to facilitate a rapid separation of oil. The supply to the washing machines can be augmented by drawing water from the bottom of the separation compartments.

Classifications:
International (IPC 8-9): B63B57/02 (Advanced/Invention); B63B57/00 (Core/Invention)
International (IPC 1-7): B63B27/24 B63B57/00
CPC: B63B57/02
European: B63B57/02

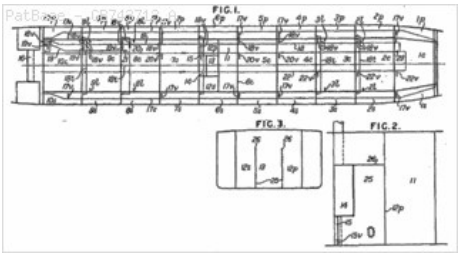

Family:

Publication number	Publication date	Application number	Application date
GB743713 A	19560125	GB19530001042	19530113

Priority:

GB19530001042 19530113

Probable Assignee: SHELL REFINING AND MARKETING CO
Assignee(s): (std): SHELL REFINING AND MARKETING CO
Assignee(s): SHELL REFINING AND MARKETING COMPANY LIMITED
Inventor(s): (std): STRANG JAMES WYLIE ; LAMB JOHN ; BROWN ROBERT LOGAN MCGREGOR

3) Family number: 25981223 (GB1469319A)

© PatBase

Title: **TRANSPORTING** OF COAL-LIQUID SLURRIES

Abstract: Source: GB1469319A 1469319 Coal slurries MARATHON OIL CO 21 June 1974 [5 July 1973] 27720/74 Heading C5G Coal is **transported** as a slurry in a carrier medium by grinding the coal to an average diameter of less than 150 microns such that at least 95 percent of the coal will pass through a 14 Tyler mesh screen, heating the ground coal to at least 150? C. for a sufficient time to remove at least 40 wt. per cent of the "bound" water content of the coal, slurrying the dry, ground coal in the carrier medium to a concentration of 5-90 wt. per cent of the coal and therafter **transporting** the slurry. At least 70 wt. per cent of the "free" water may be removed before grinding. The carrier medium may be water, crude oil, refined fractions thereof, e.g. gasoline, and **jet** fuel or partially refined fractions thereof, e.g. gasoline, gas oils, naphthas, and **kerosene**. After grinding and drying, but before slurrying, the coal may be pelletized or otherwise agglomerated. Surfactants may be present in the slurry. In the ease of an organic carrier medium, these may impart oleophobic or oleophilic properties to the coal, e.g. fatty acids, monovalent cation salts thereof, sorbitan monooleate or petroleum sulphonates. In the case of an aqueous carrier medium, the surfactant may impart hydrophilic or hydrophobic properties to the coal. The slurry may also contain chemical agents facilitating suspension of the coal particles, e.g. high molecular weight polymers. Viscosity-reducing and drag-reducing agents may also be present. The coal particles may be coated with gases, e.g. air, hydrocarbons containing up to 4 C atoms and natural gas or solid materials, e.g. inorganic and/or organic salts of the metals of groups II, III, IVa, V, VI, VII and VIII of the Mendeleef Periodic Table, synthetic resins, e.g. cellulose acetate, polystyrene, polyethylene, and polyvinylacetate, clay, kaolin, fuller's earth, other aluminium silicates, and limestone.

Classifications:
International (IPC 8-9): B65G53/30 C10L1/32 C10L5/00 (Advanced/Invention); B65G53/00 C10L1/32 C10L5/00 (Core/Invention)
International (IPC 1-7): B65G53/00 B65G53/30 C10L1/32 C10L5/00 F26B3/00
CPC: B65G53/30 C10L1/322 C10L1/326
European: B65G53/30 C10L1/32A C10L1/32C

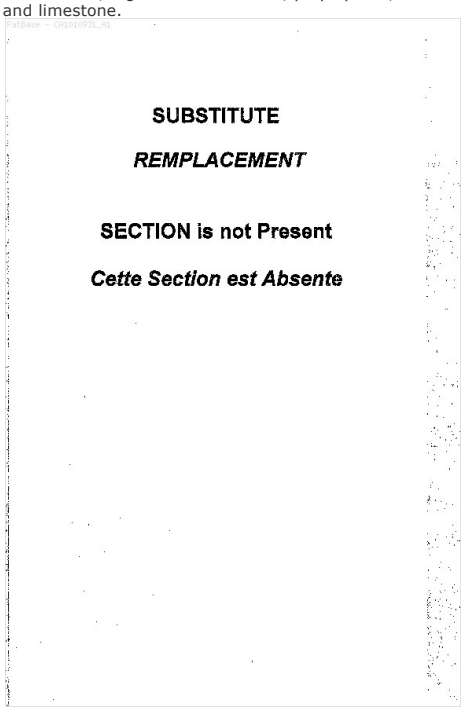

Family:

Publication number	Publication date	Application number	Application date
BE816988 A1	19741227	BE19740145995	19740627
CA1010931 A1	19770524	CA19740198876	19740503
DD112955 A	00000000	DD19740178582	00000000
DD112955 Z	19750512	DD19740178582	19740517
DE2422606 A1	19750130	DE19742422606	19740508
DE2422606 B2	19770721	DE19742422606	19740508
DE2422606 C3	19780302	DE19742422606	19740508
FR2235860 A1	19750131	FR19740023009	19740702
FR2235860 B1	19780324	FR19740023009	19740702
GB1469319 A	19770406	GB19740027720	19740621
IT1012882 A	19770310	IT19740023258	19740528
JP50037178 A2	19750407	JP19740072744	19740625
JP55017730 B4	19800514	JP19740072744	19740625
NL7409018 A	19750107	NL19740009018	19740703

Priority:
US19730376652 19730705

Probable Assignee: MARATHON OIL CO

Assignee(s): (std): MARATHON OIL CO ; MARATHON OIL COMPANY TE FINDLAY OHIO VER ST V AM

Assignee(s): MERRILL LAVAUN S ; POUSKA GEORGE A ; DRAYER DENNIS E ; GOGARTY WILLIAM B ; MARATHON OIL CO FINDLAY OHIO V ST A ; MARATHON OIL CY ; MARATHON OIL COMPANY ; MARATHON OIL CY US

Inventor(s): (std): DRAYER DENNIS E ; GOGARTY WILLIAM B ; MERRILL JUN LAVAUN S ; MERRILL LAVAUN S JR ; POUSKA GEORGE A

Inventor(s): POUSKA GEORGE A LITTLETON COL ; MERRILL JUN LAVAUN S ENGLEWOOD ; GOGARTY WILLIAM B FINDLAY OHIO ; DRAYER DENNIS E LITTLETON ; MERRILL LAVAUN S ; MERRILL JUN

4) Family number: 30545299 (US2005120715A)

© PatBase

Title: HEAT ENERGY RECAPTURE AND RECYCLE AND ITS NEW APPLICATIONS

Abstract: Source: US2005120715A What has been created is a plurality and a variety of processes and a variety of devices correspondingly supportive to each process, wherein, a new partnership between; (1) a heat absorbing radiator compressed air pipes/tubes and (2) a gas turbine engine or a reciprocating piston engine,-is used to recapture and reconvert the, otherwise wasted, heat energies expelled by engines, by factories, by smelting plants, by distillation plants, by chillers/coolers/freezers, by cooking ovens, by lamps/stoves, by trash burners, and the heat energies created by the solar heat on the desert/ocean water,-into electric power and finally into hydrogen-deuterium fuel,-by having the engine's tailpipes submerged in cold compressed air inside the heat absorbing radiator pipes in reverse air flow, to further drive and re-drive the same engine; wherein, in order to capture fusion heat energy the hydrogen bomb is detonated in the deep ocean to catch the flames by the water and the hot water is used to energize the compressed air inside the heat absorbing radiator pipes; wherein, in order to produce fusion energy, an abundant electric arc is passed across liquid deuterium or across gaseous deuterium by the electro-plasma torch and sparkplug in the internal combustion engine, and by detonating a dynamite inside a liquid deuterium; wherein diamond is produced by placing carbon inside the hydrogen bomb; and wherein, deuterium fusion flame is used first in smelting glass to large sizes before running an engine.

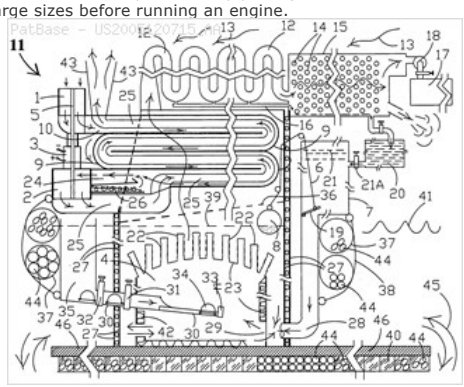

Classifications:
International (IPC 8-9): B01D61/10 B63B1/10 B63B1/12 B63B35/00 B63B35/44 B63B39/06 B63B43/06 B63G1/00 B63G8/30 B63H19/02 B63H9/06 B63H9/10 B63J3/00 B64C31/04 B64C31/06 E02B3/06 F01K13/00 F01K23/10 F01K27/00 F02C1/00 F02C1/05 F02G5/00 F03B13/18 F03D11/04 F03D5/00 F03D5/04 F03G7/00 F24F5/00 F24F6/14 F28D5/00 (Advanced/Invention);
B63B1/24 B63J1/00 F24F1/00 (Advanced/Non-invention);
B01D61/02 B63B1/00 B63B35/00 B63B35/44 B63B43/00 B63H9/00 B63J3/00 E02B3/06 F01K23/10 F01K27/00 F02C1/00 F02G5/00 F03B13/00 F03D5/00 F03G7/00 (Core/Invention)
International (IPC 1-7): B01D61/10 B63B17/00 B63B35/00 B63B7/00 F01K23/10 F03D5/02 F03D5/04 F03G7/00 F04B35/00 F24F6/14 F28D5/00
CPC: F05B2210/18 B63H9/06 B63H9/1021 F05D2260/212 F01K27/00 F02C1/05 F03G7/00 Y02T50/672 Y02T50/676 B63B1/121 Y02W10/33 Y02W10/37 B63B1/107 B63B1/24 B63B39/06 B63B2039/067 B63G1/00 B63G8/30 B63H19/02 B63J1/00 C02F1/04 F05B2240/40 Y02T70/59 F03D11/04 B01D61/10 B63B35/00 B63B35/44 B63B43/06 B63B2035/446 B63B2035/4466 B63J3/00 B64C31/04 B64C31/06 E02B3/062 E02B2017/0091 F03B13/182 F03D5/00 F03D5/04 F05B2240/921 F05B2240/922 F24F5/0035 F24F6/14 F24F2001/0088 F28D5/00 Y02B10/30 Y02B10/50 Y02B30/545 Y02E10/38 Y02E10/70 Y02E10/728
European: B01D61/10 B63B1/10C B63B1/12B B63B35/00 B63B35/44 B63B39/06 B63B43/06 B63G1/00 B63G8/30 B63H19/02 B63H9/06 B63H9/10 B63H9/10C B63J3/00 B64C31/04 B64C31/06 E02B3/06B F01K27/00 F02C1/05 F03B13/18B2D F03D11/04 F03D5/00 F03D5/04 F03G7/00 F24F5/00C7 F24F6/14 F28D5/00 L63B1/24 L63B35/44 L63B35/44E7 L63B35/44E9 L63B39/06R L63B43/06 L63H9/10 L63J1/00 L63J3/00 M02F1/04 P02B17/00M R05B210/18 R05B240/40 R05B240/921 R05B240/922 R05B240/931 R05B260/212 R24F1/00G1 Y02B10/30 Y02B10/50 Y02B30/14 Y02B30/54D Y02E10/38 Y02E10/70 Y02E10/72L Y02E10/72N Y02E20/18 Y02T50/67B2 Y02T50/67F2 Y02T70/59
US: 114/267 114/382 114/39.1 114/39.2 114/39.26 114/39.29 114/39.31 210/136 210/170 210/259 210/321.87 244/153.00R 244/153R 244/24 405/76 415/5 416/8 417/330 417/332 60/39.01 60/506 60/618 60/618P 60/676 60/698 60/698P 60/772 62/304 62/310 62/314 623/40

Family:

Publication number	Publication date	Application number	Application date
AP200704109 A0	20070831	AP20070004109	20050727
AU2005325208 AA	20060727	AU20050325208	20050727
AU2005325208 BB	20120329	AU20050325208	20050727
CA2397847 AA	20040212	CA20022397847	20020812
CA2404410 AA	20040320	CA20022404410	20020920
CA2599414 AA	20070823	CA20052599414	20050727
CN101146981 A	20080319	CN200580049207	20050727
EA200701538 A1	20081030	EA20070001538	20050727
EP1851418 A1	20071107	EP20050779535	20050727
EP1851418 A4	20090513	EP20050779535	20050727
IN05612DN2007 A	20070831	IN2007DN05612	20070719
US2005120715 AA	20050609	US20050039624	20050120
US2008155985 AA	20080703	US20050795835	20050727
US4756666 A	19880712	US19840631321	19840719
US4859146 A	19890822	US19880177599	19880405
US5027735 A	19910702	US19900472753	19900131
US5052902 A	19911001	US19860820082	19860121
US5056447 A	19911015	US19880255657	19881013
US5094595 A	19920310	US19890376002	19890815
US5435259 A	19950725	US19930097655	19930727
US5507943 A	19960416	US19910811470	19911218
US6293121 BA	20010925	US19980137499	19980820
US6327994 BA	20011211	US19970999729	19971223
US8051637 BB	20111108	US20050795835	20050727
WO06078315 A1	20060727	WO2005US26793	20050727
WO06078315 C1	20061102	WO2005US26793	20050727

Priority:

US19840631321	19840719	US19840631322	19840719	US19880255719	19881013
US19860820082	19860121	US19880177599	19880405	US19880255657	19881013
US19970058062P	19970905	US19900472753	19900131	US19890376002	19890815
US19930097655	19930727	US19910773680	19911008	US19950506335	19950725
US19910811470	19911218	US19970999729	19971223	US20050795835	20050727
CA20022404410	20020920	CA20022397847	20020812	US20050039624	20050120
WO2005US26793	20050727	US19980137499	19980820	PH20040000148	20040325

Probable Assignee: CHRISTION SCHOOL OF TECHNOLOGY

Assignee(s): (std): CHRISTIAN SCHOOL OF TECHNOLOGY CHARITABLE FOUNDATION TRUST ; CHRISTION SCHOOL OF TECHNOLOGY ; LABRADOR GAUDENCIO A ; LABRADOR GAUDENCIO AQUINO ; GAUDENCIO LABRADOR ; LABRADOR GAUDENCIO ; CHRISTIAN SCHOOL OF TECHNOLOGY

Assignee(s): CHRISTIAN SCHOOL OF TECHNOLOGY CHARITABLE FOUNDATI ; CHRISTION SCHOOL OF TECHNOLOGY CHARITABLE FOUNDATION TRUST ; CHRISTION SCHOOL OF TECHNOLOGY CHARITABLE FOUNDATI

Inventor(s): (std): CHRISTIAN SCHOOL OF TECHNOLOGY ; LABRADOR GAUDENCIO A ; LABRADOR GAUDENCIO AQUINO

Inventor(s): GAUDENCIO AQUINO LABRADOR ; CHRISTIAN SCHOOL OF TECHNOLOGY CHARITABLE ; LABRADOR GAUDENCIO

Agent(s): ROGER SYN AND CO PATENT AND TRADE MARK ATTORNEYS; FURMAN AND KALLIO; OYEN WIGGS GREEN AND MUTALA LLP; GAUDENCIO AQUINO LABRADOR

Designated states: AE AG AL AM AT AU AZ BA BB BE BF BG BJ BR BW BY BZ CA CF CG CH CI CM CN CO CR CU CY CZ DE DK DM DZ EC EE EG ES FI FR GA GB GD GE GH GM GN GQ GR GW HR HU ID IE IL IN IS IT JP KE KG KM KP KZ LC LI LK LR LS LT LU LV MA MC MD MG MK ML MN MR MW MX MZ NA NE NG NI NL NO NZ OM PG PH PL PT RO RU SC SD SE SG SI SK SL SM SN SY SZ TD TG TJ TM TN TR TT TZ UA UG US UZ VC VN YU ZA ZM ZW

5) Family number: 9058619 (US5160045A) © PatBase

Title: Process for removing elemental sulfur from fluids

Abstract: Source: US5160045A A process for removing elemental sulfur from fluids such as refined petroleum products **transported** through **pipelines** for the transportation of sour hydrocarbon streams. The fluids are contacted with an aqueous solution containing caustic, sulfide and optionally elemental sulfur to produce an aqueous layer containing metal polysulfides and a clear fluid layer having a reduced elemental sulfur level. Organo mercaptans may also be mixed with the fluid to accelerate the removal of elemental sulfur.

Classifications:
International (IPC 8-9): C07C7/10 C10G19/02 C10G29/10 (Advanced/Invention);
C10G19/00 C10G29/00 (Core/Invention)
International (IPC 1-7): B01D11/00 C07C7/10 C10G19/02
CPC: C10G29/10
European: C10G29/10
US: 208/208M 208/230 208/232 210/634 210/638 210/721

Family:

Publication number	Publication date	Application number	Application date
CA2067430 AA	19921218	CA19922067430	19920428
CA2067430 C	19980804	CA19922067430	19920428
CA2105134 AA	19940309	CA19932105134	19930830
CA2105134 C	20001017	CA19932105134	19930830
US5160045 A	19921103	US19910716485	19910617
US5250181 A	19931005	US19920941823	19920908

Priority:

US19910716485 19910617 CA19922067430 19920428 US19920941823 19920908
CA19932105134 19930830

Probable Assignee: EXXON RESEARCH AND ENGINEERING CO

Assignee(s): (std): EXXON RESEARCH ENGINEERING CO ; FALKINER ROBERT J ; POIRIER MARC ANDRE ; IMP OIL ; CAMPBELL IAN D

Assignee(s): EXXON RESEARCH AND ENGINEERING CO ; EXXON RESEARCH AND ENGINEERING COMPANY ; IMPERIAL OIL ; FALKINER ROBERT JAMES

Inventor(s): (std): CAMPBELL IAN D ; FALKINER ROBERT J ; POIRIER MARC A ; POIRIER MARC ANDRE

Inventor(s): FALKINER ROBERT JAMES

Agent(s): BORDEN LADNER GERVAIS LLP

6) Family number: 9451162 (US5618408A)

Title: METHOD FOR REDUCING ELEMENTAL SULFUR PICK-UP BY HYDROCARBON FLUIDS IN A **PIPELINE** (LAW177)

Abstract: Source: US5618408A The amount of elemental sulfur or other sulfur contaminant picked-up by refined hydrocarbon product such as gasoline, diesel, **jet** fuel, **kerosene** or fuel additive such as ether, which is **pipelined** in a **pipeline** used to **transport** sour hydrocarbon fluids, is reduced by controlling the level of dissolved oxygen in the refinery hydrocarbon product to which is to be **pipelined**, said dissolved oxygen level being held to a level of about 30 wppm and less, preferably about 20 wppm and less. The dissolved oxygen level in the refined hydrocarbon product is controlled by reducing the amount fair injection employed in mercaptan or disulfide reduction production increases or by the use of oxygen scavengers prior to the introduction of the refined hydrocarbon product into the **pipeline**, or by limiting the exposure of the product to air in oxygen during **transport** or storage.

Classifications:
International (IPC 8-9): C09K8/532 C10G29/20 C10G31/00 (Advanced/Invention); C09K8/52 (Core/Invention)
International (IPC 1-7): C10G29/20 C10G31/00 C10G45/00
CPC: Y10T137/0391 C09K8/532
European: C09K8/532
US: 137/13 208/370 208/48R 208/98R

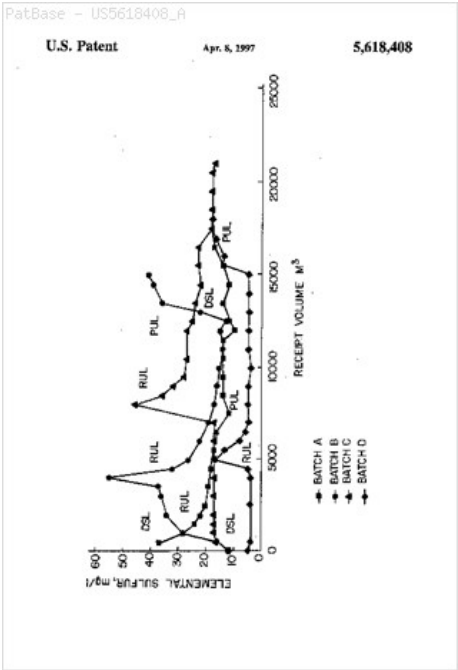

Family:

Publication number	Publication date	Application number	Application date
CA2158789 AA	19960408	CA19952158789	19950921
CA2158789 C	20001017	CA19952158789	19950921
US5618408 A	19970408	US19940320024	19941007

Priority:
US19940320024 19941007 CA19952158789 19950921

Probable Assignee: EXXON RESEARCH AND ENGINEERING CO
Assignee(s): (std): EXXON RESEARCH ENGINEERING CO ; FALKINER ROBERT JAMES ; POIRIER MARC ANDRE
Assignee(s): IMP OIL ; EXXON RESEARCH AND ENGINEERING CO ; EXXON RESEARCH AND ENGINEERING COMPANY
Inventor(s): (std): FALKINER ROBERT J ; FALKINER ROBERT JAMES ; POIRIER MARC ANDRE
Agent(s): BORDEN LADNER GERVAIS LLP

7) Family number: 31394024 (US2004250850A)

Title: METHOD AND SYSTEM FOR CONTROLLING WITHDRAWAL OF LIQUID PRODUCT FROM **PIPELINES**

Abstract: Source: US2004250850A This invention is to a method and system for controlling withdrawal of liquid from **pipelines**. The system includes intercommunicating analyzers, control applications and controllers for analyzing and controlling flow of a liquid from a **pipeline** system. **Pipeline** systems with which this invention can be used include any type of **pipeline** system capable of **transporting** and distributing liquid fluids, particularly hydrocarbon liquids.

Classifications:
International (IPC 8-9): G05D11/13 (Advanced/Invention); G05D11/00 (Core/Invention)
International (IPC 1-7): E03B1/00 F16K17/26 F16K24/00 F16K31/12 F16K31/36 F17D1/00 F17D3/00 G01N1/00 G01N1/10 G01N33/00 G01N33/22 G05D11/00 G05D11/13
CPC: Y10T137/0324 Y10T137/2509 G05D11/131
European: G05D11/13B
US: 137/2 137/93 422/62 73/863.01

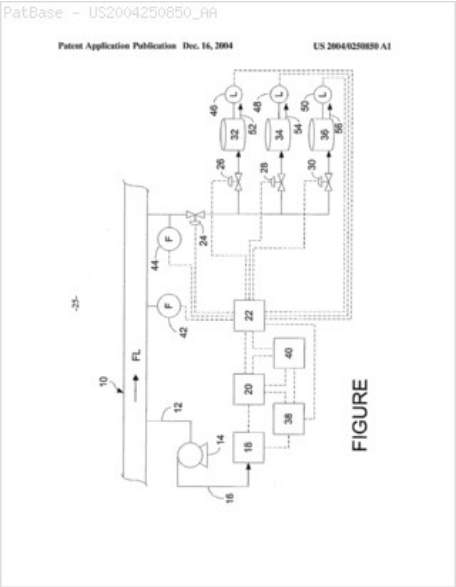

Family:

Publication number	Publication date	Application number	Application date
US2004250850 AA	20041216	US20030458738	20030611
US6966326 BB	20051122	US20030458738	20030611
WO05001393 A2	20050106	WO2004US13834	20040504
WO05001393 A3	20050526	WO2004US13834	20040504

Priority:
US20030458738 20030611

Probable Assignee: EXXONMOBIL RESEARCH AND ENGINEERING CO

Assignee(s): (std): BROWN JAMES M ; BROWN JAMES MILTON ; EXXONMOBIL RES AND ENG CO ; EXXONMOBILE RES AND ENGINEERIN ; MURRAY JACK B ; KASTRUP RODNEY V ; MURRAY JR JACK B ; KASTRUP RODNEY VERNER

Assignee(s): EXXONMOBILE RESEARCH AND ENGINEERING COMPANY ; MURRAY JR ; EXXONMOBILE RESEARCH AND ENGINEERING CO ; EXXONMOBIL RESEARCH AND ENGINEERING CO ; EXXONMOBIL RESEARCH AND ENGINEERING COMPANY

Inventor(s): (std): BROWN JAMES M ; BROWN JAMES MILTON ; KASTRUP RODNEY V ; KASTRUP RODNEY VERNER ; MURRAY JACK B ; MURRAY JR JACK B

Inventor(s): MURRAY JR

Designated states: AE AG AL AM AT AU AZ BA BB BE BF BG BJ BR BW BY BZ CA CF CG CH CI CM CN CO CR CU CY CZ DE DK DM DZ EC EE EG ES FI FR GA GB GD GE GH GM GN GQ GR GW HR HU ID IE IL IN IS IT JP KE KG KP KR KZ LC LK LR LS LT LU LV MA MC MD MG MK ML MN MR MW MX MZ NA NE NI NL NO NZ OM PG PH PL PT RO RU SC SD SE SG SI SK SL SN SY SZ TD TG TJ TM TN TR TT TZ UA UG US UZ VC VN YU ZA ZM ZW

8) Family number: 31696217 (US2005144834A)

© PatBase

Title: MIXED ALCOHOL FUELS FOR INTERNAL COMBUSTION ENGINES, FURNACES, BOILERS, KILNS AND GASIFIERS

Abstract: Source: US2005144834A Mixed alcohol formulas can be used as a fuel additive in gasoline, diesel, **jet** fuel, aviation gasoline, heating oil, bunker oil, coal, petroleum coke or as a neat fuel in and of itself. The mixed alcohols formulations can contain C_1 -C_5 alcohols, or in the alternative, C_1 -C_8 alcohols or higher C_1 -C_{10} alcohols in order to boost energy content. The C_1 -C_5 mixed alcohols contain more ethanol than methanol with declining amounts of propanol, butanol and pentanol. C_1 -C_8 mixed alcohols contain the same, with declining amounts of hexanol, heptanol and octanol. C_1 -C_{10} mixed alcohols contain the same, with declining amounts of nananol and decanol. Synthetically produced mixed alcohol formulas feature higher octane and energy densities than either MTBE or fermented grain ethanol; more stable Reid Vapor Pressure blending characteristics; and increased soluablizing effects on condensate water. The primary benefits of mixed alcohols are increased combustion efficiencies, reduced emissions profiles and low production costs.

Classifications:
International (IPC 8-9): B65B1/04 B65G53/30 C10J3/72 C10L1/00 C10L1/02 C10L1/04 C10L1/06 C10L1/08 C10L1/10 C10L1/18 C10L1/182 C10L1/32 C10L10/00 C10L10/02 C10L8/00 C10L9/10 (Advanced/Invention);
C10L1/00 C10L1/10 C10L10/00 (Core/Invention);
C10L (Subclass/Invention)
International (IPC 1-7): C10L1/18 C10L1/32
CPC: C10L1/18 C10L1/19 C10L1/023 C10L1/026 C10L1/322 C10L9/10 C10L10/00 C10L2230/14 C10L10/10 C10L1/1822 C10J3/72 C10L1/00 C10L1/32 C10J2300/093 C10J2300/0943 C10L10/02 C10L1/02 C10L1/1824
European: C10L1/02 C10L1/02B C10L1/02D C10L1/18 C10L1/182B C10L1/182B2 C10L1/32A C10L10/02 C10L9/10 M10L1/182B2 M10L1/19
US: 406/191 44/266 44/280 44/302 44/302P 44/452 44/452P 53/473

Family:

Publication number	Publication date	Application number	Application date
AU2005327583 AA	20060824	AU20050327583	20050218
AU2005327583 BB	20110407	AU20050327583	20050218
CA2598368 AA	20070817	CA20052598368	20050218
CA2598368 C	20130416	CA20052598368	20050218
CN101146896 A	20080319	CN200580049206	20050218
CN101146896 B	20110817	CN200580049206	20050218
EP1853683 A1	20071114	EP20050723346	20050218
EP1853683 A4	20120229	EP20050723346	20050218
HK1119198 A1	20120622	HK20080110374	20080919
HK1119198 A3	20090227	HK20080110374	20080919
IN06909DN2007 A	20070928	IN2007DN06909	20070906
IN267596 B	20150731	IN2007DN06909	20070906
JP2008530337 T2	20080807	JP20070556124T	20050218
MX2007010015 A1	20081024	MX20070010015	20070817
US2005144834 AA	20050707	US20050060169	20050217
US2010024288 AA	20100204	US20090498850	20090707
US2013019519 AA	20130124	US20120621408	20120917
US2015322363 AA	20151112	US20150801885	20150717
US6858048 BA	20050222	US20020124665	20020417
US7559961 BB	20090714	US20050060169	20050217
US8277522 BB	20121002	US20090498850	20090707
US9085741 BB	20150721	US20120621408	20120917
WO06088462 A1	20060824	WO2005US05326	20050218

Priority:

US20010284619P	20010418	US20010284620P	20010418	WO2005US05326	20050218
US20010284621P	20010418	US20050060169	20050217	US20020124665	20020417
US20090498850	20090707	US20120621408	20120917	US20150801885	20150717

Probable Assignee: STANDARD ALCOHOL CO OF AMERICA

Assignee(s): (std)**:** GIARDINO GERADETTE ; GIARDINO RADOSEVICH GERADELTE ; JIMESON ROBERT M ; RADOSEVICH MARK C ; STANDARD ALCOHOL CO OF AM ; STANDARD ALCOHOL CO OF AMERICA INC ; STEVENS REX R ; STANDARD ALCOHOL COMPANY OF AM ; STANDARD ALCOHOL COMPANY OF AMERICA INC ; STANDARD ALCOHOL CO OF AMERICA ; TLJM PETER J

Inventor(s): (std)**:** GIARDINO GERADETTE ; GIARDINO RADOSEVICH GERADELTE ; JIMESON ROBERT M ; RADOSEVICH MARK C ; STANDARD ALCOHOL COMPANY OF AMERICA INC ; STEVENS REX R ; TLJM PETER J

Inventor(s): STEVENS REX ; REX R STEVENS ; ROBERT M JIMESON ; MARK C RADOSEVICH ; RADOSEVICH MARK ; JIMESON ROBERT

Agent(s): MADDERNS PATENT AND TRADE MARK ATTORNEYS; BARLOW CHARLES BRIAN; GOWAN INTELLECTUAL PROPERTY; DECKER JONES MCMACKIN MCCLANE HALL AND BATES PC; GEOFFREY A; BRIAN K

Designated states: AE AG AL AM AT AU AZ BA BB BE BF BG BJ BR BW BY BZ CA CF CG CH CI CM CN CO CR CU CY CZ DE DK DM DZ EC EE EG ES FI FR GA GB GD GE GH GM GN GQ GR GW HR HU ID IE IL IN IS IT JP KE KG KP KR KZ LC LI LK LR LS LT LU LV MA MC MD MG MK ML MN MR MW MX MZ NA NE NI NL NO NZ OM PG PH PL PT RO RU SC SD SE SG SI SK SL SM SN SY SZ TD TG TJ TM TN TR TT TZ UA UG US UZ VC VN YU ZA ZM ZW

9) Family number: 32564598 (US2006011517A)

© PatBase

Title: METHOD FOR REDUCING THE LEVEL OF ELEMENTAL SULFUR AND TOTAL SULFUR IN HYDROCARBON STREAMS

Abstract: Source: US2006011517A A method for reducing the level of elemental sulfur from sulfur-containing hydrocarbon streams as well as reducing the level of total sulfur in such streams. Preferred hydrocarbon streams include fuel streams such as naphtha streams that are **transported** through a **pipeline**. The sulfur-containing hydrocarbon stream is contacted with a mixture of water, a caustic, a surfactant, at least one metal sulfide, and optionally an aromatic mercaptan. This results in an aqueous phase and a hydrocarbon phase containing reduced levels of both elemental sulfur and total sulfur.

Classifications:
International (IPC 8-9): C10G19/02 C10G19/04 C10G21/00 C10G29/28 C10G31/00 C10G75/00 (Advanced/Invention);
F16L58/00 (Advanced/Non-invention);
C10G19/00 C10G21/00 C10G29/00 C10G31/00 C10G75/00 (Core/Invention);
F16L58/00 (Core/Non-invention)
CPC: C10G29/28 C10G2300/1044 C10G2300/202 C10G2300/805 C10G2400/02 C10G29/10 C10G19/02 C10G19/04
European: C10G19/02 C10G19/04 C10G29/10 C10G29/28
US: 208/203 208/208R 208/226 208/230 208/231 208/232 208/233 208/240 208/370

Family:

Publication number	Publication date	Application number	Application date
CA2512063 AA	20060114	CA20052512063	20050712
CA2512063 C	20140930	CA20052512063	20050712
CA2512064 AA	20060114	CA20052512064	20050712
CA2512064 C	20120103	CA20052512064	20050712
US2006011517 AA	20060119	US20050123516	20050506
US2006011518 AA	20060119	US20050123515	20050506
US7713409 BB	20100511	US20050123516	20050506

Priority:

US20040587917P 20040714 US20040587916P 20040714 US20050123516 20050506
US20050123515 20050506 CA20052512064 20050712 CA20052512063 20050712

Probable Assignee: EXXONMOBIL RESEARCH AND ENGINEERING CO

Assignee(s): (std)**:** EXXONMOBIL RES AND ENG CO ; FEIMER JOSEPH L ; IMP OIL

Assignee(s): IMP OIL111 ST. CLAIR AVENUE WESTTORONTOO1M5W 1K3CA ; IMPERIAL OIL ; FEIMER JOSEPH L2933 OLD LAKESHORE DRIVEBRIGHTS GROVEO1N0N 1C0CA ; EXXONMOBIL RESEARCH AND ENGINEERING CO ; EXXONMOBIL RESEARCH AND ENGINEERING COMPANY

Inventor(s): (std)**:** FEIMER JOSEPH L

Inventor(s): FEIMER JOSEPH L2933 OLD LAKESHORE DRIVEBRIGHTS GROVEO1N0N 1C0CA ; FEIMER JOSEPH

Agent(s): BORDEN LADNER GERVAIS LLP; EXXONMOBIL RESEARCH AND ENGINEERING COMPANY; EXXONMOBIL RESEARCH AND ENGINEERING CO; DAVID M

10) Family number: 33057578 (US2006118468A)

© PatBase

Title: METHOD FOR REDUCING THE AMOUNT OF SULFUR PICK-UP BY HYDROCARBON STREAMS **TRANSPORTED** THROUGH A **PIPELINE**

Abstract: Source: US2006118468A A process for reducing the level of elemental sulfur and organic sulfur pick-up by refined hydrocarbon streams such as gasoline, diesel, **jet** fuel, **kerosene** or fuel additives such as ethers or iso-octane that are **transported** through a **pipeline** used to **transport** various sulfur-containing petroleum streams. The oxygen level in the hydrocarbon stream of interest to be **pipelined** as well as in at least the first hydrocarbon stream sequenced immediately ahead of the hydrocarbon stream of interest is reduced.

Classifications:
International (IPC 8-9): C10G17/02 C10G31/00 C10G75/02 (Advanced/Invention);
C10G31/00 C10G75/00 (Core/Invention)
CPC: C10G75/02 C11D7/265 F16L58/02 F16L2101/16 F17D3/03
European: C10G75/02 C11D7/26E F16L58/02 F17D3/03 R16L101/16
US: 208/219 208/370

Family:

Publication number	Publication date	Application number	Application date
CA2587420 AA	20070511	CA20052587420	20051130
CA2587420 C	20110607	CA20052587420	20051130
US2006118468 AA	20060608	US20050274594	20051115
US7608182 BB	20091027	US20050274594	20051115
WO06062761 A1	20060615	WO2005US43080	20051130

Priority:
US20040633895P 20041207 US20050274594 20051115 WO2005US43080 20051130

Probable Assignee: EXXONMOBIL RESEARCH AND ENGINEERING CO

Assignee(s): (std): EXXONMOBIL RES AND ENG CO ; FEIMER JOSEPH L

Assignee(s): EXXONMOBIL RESEARCH AND ENGINEERING CO ; EXXONMOBIL RESEARCH AND ENGINEERING COMPANY

Inventor(s): (std): FEIMER JOSEPH L

Inventor(s): FEIMER JOSEPH

Agent(s): EXXONMOBIL RESEARCH AND ENGINEERING COMPANY; EXXONMOBIL RESEARCH AND ENGINEERING CO

Designated states: AE AG AL AM AT AU AZ BA BB BE BF BG BJ BR BW BY BZ CA CF CG CH CI CM CN CO CR CU CY CZ DE DK DM DZ EC EE EG ES FI FR GA GB GD GE GH GM GN GQ GR GW HR HU ID IE IL IN IS IT JP KE KG KM KN KP KR KZ LC LK LR LS LT LU LV LY MA MC MD MG MK ML MN MR MW MX MZ NA NE NG NI NL NO NZ OM PG PH PL PT RO RU SC SD SE SG SI SK SL SM SN SY SZ TD TG TJ TM TN TR TT TZ UA UG US UZ VC VN YU ZA ZM ZW

11) Family number: 38521550 (US2010252648A)

Title: CLIMATE PROCESSOR

Abstract: Source: US2010252648A A climate processor having virtual estuaries which enable large strips of land to act like real water estuaries thereby providing a means of climate control overhead. Said estuaries are also used to prevent polar isotherm migration, melting ice shelves, vortical storm formation and migration from lateral coastal airflow. Said estuaries are formed between two parallel-laid thermal belts formed from artificial surface whitening and jet contrails. The surface whitening can be laid down as a foam or gel and deployed overhead as a high level aviation propellant. The belts may be applied daily and dissipate as the day progresses and subsequently warms. Commercial aircraft flights may be readjusted based on the placement of the artificial estuaries. Also claimed are an aerial deployment system for the foam, a high-level aviation propellant system, a carbon trading system for commercial airlines, a "Russian Doll" gas mixing device and a range of suitable foams.

Classifications:
International (IPC 8-9): A01G15/00 B60V1/10 B64C29/00 (Advanced/Invention)
CPC: A01G15/00 B64C39/064 B64C29/0025 B64C39/10 Y02T50/12 B60V1/10 B64C29/0016 B64C29/0058
European: A01G15/00 B64C29/00B2B B64C39/06B1 B64C39/10 Y02T50/12
US: 239/14.1

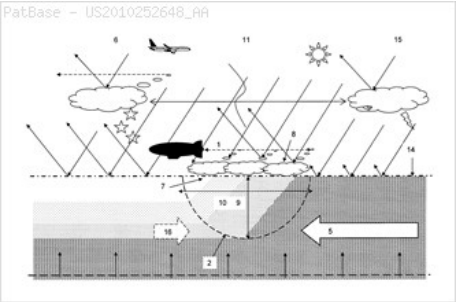

Family:

Publication number	Publication date	Application number	Application date
GB200714751 A0	20070905	GB20070014751	20070726
GB200716285 A0	20070926	GB20070016285	20070821
GB200720463 A0	20071128	GB20070020463	20071017
GB200722970 A0	20080102	GB20070022970	20071123
GB200802955 A0	20080326	GB20080002955	20080219
GB200805718 A0	20080430	GB20080005718	20080329
GB200807559 A0	20080604	GB20080007559	20080425
GB200808088 A0	20080611	GB20080008088	20080502
GB200808144 A0	20080611	GB20080008144	20080506
GB200809833 A0	20080709	GB20080009833	20080530
GB200809845 A0	20080709	GB20080009845	20080530
GB200810133 A0	20080709	GB20080010133	20080604
GB200813302 A0	20080827	GB20080013302	20080721
GB200813303 A0	20080827	GB20080013303	20080721
GB200814673 A0	20080917	GB20080014673	20080811
GB200815170 A0	20080924	GB20080015170	20080820
GB2452152 A1	20090225	GB20080015170	20080820
GB2467905 A1	20100825	GB20080013303	20080721
US2010252648 AA	20101007	US20100698848	20100202

Priority:

GB20070014751 20070726	GB20070016285 20070821	GB20070020463 20071017
GB20080005718 20080329	GB20080002955 20080219	GB20070022970 20071123
GB20080008088 20080502	GB20080006309 20080408	GB20080009833 20080530
GB20080013302 20080721	GB20080009845 20080530	GB20080015170 20080820

Probable Assignee: ROBINSON NICHOLAS P
Assignee(s): (std): ROBINSON NICHOLAS ; ROBINSON NICHOLAS P ; ROBINSON NICHOLAS PAUL ; TIMMONS ALBAN
Assignee(s): NICHOLAS PAUL ROBINSON
Inventor(s): (std): ROBINSON NICHOLAS PAUL
Inventor(s): NICHOLAS PAUL ROBINSON
Agent(s): NICHOLAS PAUL ROBINSON

12) Family number: 46814479 (IN02535CN2010A) © PatBase

Title: ROCKS AND AGGREGATE, AND METHODS OF MAKING AND USING THE SAME

Abstract: Source: IN02535CN2010A Compositions comprising synthetic rock, e.g., aggregate, and methods of producing and using them are provided. The rock, e.g., aggregate, contains CO2 and/or other components of an industrial waste stream. The CO2 may be in the form of divalent cation carbonates, e.g., magnesium and calcium carbonates. Aspects of the invention include contacting a CO2 containing gaseous stream with a water to dissolve CO2, and placing the water under precipitation conditions sufficient to produce a carbonate containing precipitate product, e.g., a divalent cation carbonate.

Classifications:
International (IPC 8-9): B01D53/14 B01D53/62 C01B31/24 C01F11/18 C01F5/24 C04B28/00 (Advanced/Invention);
C02F1/52 (Advanced/Non-invention);
B01D53/62 C01B31/00 C01F11/00 C01F5/00 (Core/Invention);
C02F1/52 (Core/Non-invention)
International (IPC 1-7): B01D53/14
CPC: Y02E60/366 Y02E70/10 Y02E70/20 Y02W10/33 Y02W10/37 Y02P40/18
European: Y02E60/36F Y02E70/10

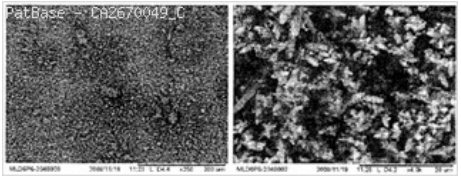

Family:

Publication number	Publication date	Application number	Application date
CA2670049 AA	20091129	CA20092670049	20090529
CA2670049 C	20111025	CA20092670049	20090529
IN02535CN2010 A	20101022	IN2010CN02535	20100429

Priority:

US20080056972P 20080529	US20080073319P 20080617	US20080081299P 20080716
US20080101631P 20080930	US20080101629P 20080930	US20080101626P 20080930
US20080107645P 20081022	US20080117541P 20081124	US20080117543P 20081124
US20080344019 20081224	US20090149633P 20090203	US20090158992P 20090310
US20090181250P 20090526	WO2009US45722 20090529	

Probable Assignee: CALERA CORP

Assignee(s): (std)**:** CALERA CORP

Assignee(s): CAMIRE CHRIS ; CONSTANTZ BRENT ; FARSAD KASRA ; O NEIL JAMES ; STAGNARO JOHN ; YOUNGS ANDREW ; THATCHER RYAN ; PATTERSON JOSHUA

Inventor(s): (std)**:** YOUNGS ANDREW ; PATTERSON JOSHUA ; O NEIL JAMES ; FARSAD KASRA ; CONSTANTZ BRENT ; CAMIRE CHRIS

Inventor(s): PATERSON JOSHUA ; STAGNARO JOHN ; THATCHER RYAN

Agent(s): GOWLING LAFLEUR HENDERSON LLP

13) Family number: 45079631 (US2011239973A)

© PatBase

Title: FUEL MIXTURE CONTAINING COMBUSTIBLE SOLID POWDER AND ENGINE USING THE FUEL MIXTURE

Abstract: Source: US2011239973A The present invention refers to a fuel mixture that contains combustible solid powder and produced by mixing combustible solid powder and liquid fuel. It is in a simple way to make use of renewable biomass materials instead of fossil fuel for driving internal combustion engine to provide powder, in favor of saving fossil fuel resource. And an engine can use the fuel mixture.

Classifications:

International (IPC 8-9): C07G1/00 C10L1/00 C10L1/02 C10L1/04 C10L1/32 C10L5/00 C10L5/40 C10L8/00 F02B45/10 F02D19/04 F02D19/08 F02M25/00 F02M27/08 F02M37/00 F02M37/06 F02M37/08 F02M43/04 F02M61/10 F02M61/14
F15B21/04 (Advanced/Invention);
C10L1/04 C10L5/40 F02B45/10 F02M61/10 (Advanced/Non-invention);
C10L1/00 C10L1/32 C10L5/00 F02B45/00 F02M37/00 F02M43/00 F02M61/00 (Core/Invention)

CPC: Y02T10/34 F02M43/04 C10L1/02 C10L1/1608 C10L1/1817 C10L1/183 C10L1/1832 C10L1/322 C10L5/00 C10L5/366 F02B45/10 F02M57/00 Y02E50/30 C07G1/00 C10L1/04 F02M61/10

European: C10L1/02 C10L1/16A C10L1/183 C10L1/183B C10L1/18W C10L1/32A C10L5/00 C10L5/36H F02B45/10 F02M43/04 F02M57/00 Y02E50/30

US: 123/1.00AP 123/1A 44/312 44/312S 44/412 44/412S 44/436 44/436S 44/441 44/441S 44/451 44/451S 92/78 92/78S

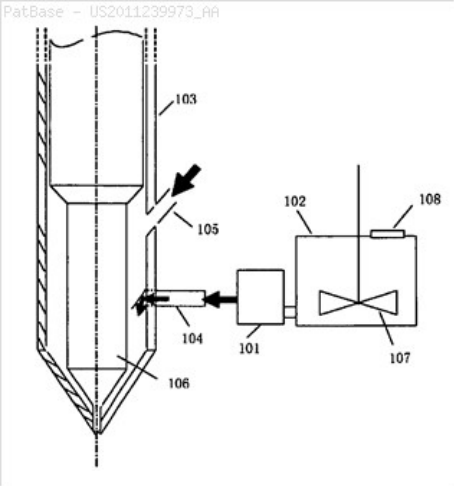

Family:

Publication number	Publication date	Application number	Application date
AU2009319541 AA	20100603	AU20090319541	20091028
BRPI0916083 A2	20151110	BR2009PI16083	20091028
CA2742425 AA	20100603	CA20092742425	20091028
CN101724475 A	20100609	CN200810176127	20081103
CN101735871 A	20100616	CN200810181384	20081117
CN101768487 A	20100707	CN200910003447	20090104
CN101955832 A	20110126	CN200910164585	20090718
CN102203223 A	20110928	CN200980143752	20091028
DE212009000124 U1	20120228	DE200921000124U	20091028
EP2363449 A1	20110907	EP20090828590	20091028
EP2363449 A4	20120718	EP20090828590	20091028
GB201107271 A0	20110615	GB20110007271	20091028
GB2476766 A1	20110706	GB20110007271	20091028
IN03826CN2011 A	20120921	IN2011CN03826	20110602
JP2012507584 T2	20120329	JP20110533521T	20091028
KR20110082161 A	20110718	KR20117010155	20091028
US2011239973 AA	20111006	US20090126050	20091028
WO10060330 A1	20100603	WO2009CN74673	20091028

Priority:

CN200810176127 20081103 CN200810181384 20081117 CN200910164585 20090718
WO2009CN74673 20091028 CN200980143752 20091028 CN200910003447 20090104

Probable Assignee: QIN CALDONG

Assignee(s): (std): CAIDONG QIN ; QIN CAIDONG ; QIN CALDONG

Assignee(s): QIN

Inventor(s): (std): CAIDONG QIN ; QIN CAIDONG

Agent(s): ATKINSON IP; SMART AND BIGGAR; GLAWE DELFS MOLL; BEIJING SANYOU INTELLECTUAL PROPERTY AGENCY LTD

Designated states: AE AG AL AM AO AT AU AZ BA BB BE BF BG BH BJ BR BW BY BZ CA CF CG CH CI CL CM CN CO CR CU CY CZ DE DK DM DO DZ EC EE EG ES FI FR GA GB GD GE GH GM GN GQ GR GT GW HN HR HU ID IE IL IN IS IT JP KE KG KM KN KP KR KZ LA LC LI LK LR LS LT LU LV LY MA MC MD ME MG MK ML MN MR MT MW MX MY MZ NA NE NG NI NL NO NZ OM PE PG PH PL PT RO RS RU SC SD SE SG SI SK SL SM SN ST SV SY SZ TD TG TJ TM TN TR TT TZ UA UG US UZ VC VN ZA ZM ZW

14) Family number: 59402488 (DE102013018179A1) © PatBase

Title: VERFAHREN UND EINRICHTUNGEN ZUR ERZEUGUNG ABSOLUT TREIBHAUSGASFREIER KRAFTSTOFFE Procedures and equipment for production of absolute GREENHOUSE free fuels (Machine translation)

Abstract: Source: DE102013018179A1 Die Erfindung bezieht sich auf ein Verfahren zur Dekarbonisierung von Kraftstoffen jeglicher Art und auf ein Vorrichtungssystem (Einrichtungskombination) zur Durchfuehrung des Verfahrens. Das erfindungsgemaesse Verfahren umfasst acht Verfahrensschritte, naemlich 1.) Verfestigung und Speicherung atmosphaerischen Kohlenstoffs mittels Photosynthese in eukaryotischer oder pflanzlicher Biomasse, 2.) Entfernung von verfestigten atmosphaerischen Kohlenstoff enthaltender Biomasse aus der Atmosphaere durch Endlagerung (Sequestrierung) dieser Biomasse im Erdboden, 3.) Ermittlung der dauerhaft aus der oberirdischen Atmosphaere entfernten Kohlenstoff- oder Treibhausgasmengen, 4.) Einsatz mindestens eines Kraftstoffes in mindestens einem Verbrennungsmotor oder mindestens einer Brennstoffzelle, 5.) Ermittlung der Menge an fossilen Kohlen(stoff)dioxydaequivalenten, um die die Atmosphaere durch die Exploration, die Foerderung bzw. den Anbau, den **Transport**, den Einsatz und die Konversion des fuer die Kraftstoffherstellung eingesetzten Rohstoffes, sowie durch den **Transport**, die Distribution, die Lagerung, die Abgabe (Betankung) und die Nutzung des mindestens einen resultierenden Kraftstoffes zusaetzlich angereichert wird (Lebenszyklus-Betrachtung), 6.) Ermittlung der Differenz zwischen den aus der Atmosphaere entfernten atmosphaerischen Kohlen(stoff)dioxydaequivalenten der Verfahrensschritte 2 und 3 und den fossilen Kohlen(stoff)dioxydaequivalenten der Verfahrensschritte 4 und 5, um die die Atmosphaere zusaetzlich angereichert wird, 7.) Nutzung des Verfahrensschrittes 6 zur Herstellung eines Gleichgewichts zwischen den der Atmosphaere dauerhaft entzogenen atmosphaerischen Kohlen(stoff)dioxydmengen der Schritte 2 und 3 und den zusaetzlich freigesetzten fossilen Kohlen(stoff)dioxydmengen der Schritte 4 und 5 durch Anpassung der Menge des aus der Erdatmosphaere entfernten atmosphaerischen Kohlenstoffs oder durch Anpassung der (zusaetzlichen) Emission fossilen Kohlenstoffs in die Erdatmosphaere, 8.) Zusammenfassung der gemaess Schritt 7 austarierten atmosphaerischen Kohlenstoff(dioxyd)entnahmen aus der Atmosphaere und der fossilen Kohlenstoff(dioxyd)emissionen in die Atmosphaere zu einer Kohlenstoff(dioxyd)-, Treibhausgas- oder Kohlenstoffgesamtbilanz. Das erfindungsgemaesse Anlagensystem besteht aus einer Kombination von acht Vorrichtungsmodulen, naemlich einem Modul 1 zur Ernte pflanzlicher oder eukaryotischer Biomasse, einem Modul 2 zur Zusammenballung der mit dem Modul 1 geernteten Biomasse, einem Modul 3 zum Zerkleinern von Biomasse, einem Modul 4 zur Aufnahme der zerkleinerten Biomasse, einem Modul 5 zum **Transport** der zerkleinerten Biomasse, einem Modul 6a zur Verteilung der zerkleinerten Biomasse auf dem Erdboden, einem Modul 6b zur Einbringung der zerkleinerten Biomasse in tiefere Bereiche des Erdbodens, einem Modul 7 zur Bedeckung der auf dem Erdboden verteilten, zur Endlagerung vorgesehenen Biomasse mit einer Erdschicht und einem Modul 8 zur Verdichtung der Bedeckungsschicht. Die Erfindung dient zur Versorgung des Verkehrs mit diversen Nullemissionskraftstoffen und damit zum Aufbau eines Nullemissions-Mobilitaetssystems. The invention relates to a process for the decarbonization of fuels of any kind and to a device system (device combination) for implementing the method. The inventive method comprises eight steps, namely 1) strengthening and storing atmospheric carbon through photosynthesis in eukaryotic or plant biomass, 2) removal of solidified atmospheric carbon-containing biomass from the atmosphere through disposal (sequestration) of biomass in the soil, 3) Determination of the permanent from the aerial atmosphere remote carbon or greenhouse gas levels, 4.) using at least one fuel dioxydaequivalenten in at least an internal combustion engine or at least one fuel cell, 5) determining the amount of fossil carbon (material) to the atmosphere through the exploration, promoting or cultivation, **transport**, use and the conversion of for raw material, fuel production levels, and is enriched additionally by the **transport**, distribution, storage, delivery (fuel) and the use of at least one resulting fuel (life cycle analysis), 6) determining the difference between the remote from the atmosphere atmospheric carbon (material) dioxydaequivalenten the steps 2 and 3 and the fossil coal (fuel) dioxydaequivalenten the steps 4 and 5 to the atmosphere is enriched additionally, 7) use of step 6 to establish a balance between the atmosphere permanently confiscated atmospheric carbon (material) dioxydmengen the steps 2 and 3 and the additional liberated fossil coal (fuel) dioxydmengen the steps 4 and 5 by adjusting the amount of from the Earth's atmosphere remote atmospheric carbon, or by adjusting the (additional) emissions of fossil carbon into the atmosphere, 8.) Summary of in accordance with step 7 balanced atmospheric carbon (dioxide) Withdrawals from the atmosphere and fossil carbon (dioxide) emissions into the atmosphere at a carbon (dioxide) -, greenhouse gas or carbon overall balance. The inventive conditioning system consists of a combination of eight device modules, namely a module 1 for harvesting vegetable or eukaryotic biomass, a module 2 to the agglomeration of the harvested with the module 1 biomass, a module 3 for chopping the biomass, a module 4 for receiving the crushed Biomass, a module 5 for **transporting** the shredded biomass, a module 6 for distributing the shredded biomass on the ground, a module 6b for introducing the crushed biomass in deeper areas of the ground, a module 7 to cover the spread on the ground, to final disposal provided biomass with a layer of earth and a module 8 for compressing the cover layer. The invention is used to supply traffic with various zero-emission fuels and thus to build a zero-emission Mobilitaetssystems.

Classifications:
International (IPC 8-9): B09B1/00 C10L1/00 C10L3/00 (Advanced/Invention)
CPC: B09B1/00 C10L1/026 C10L3/00

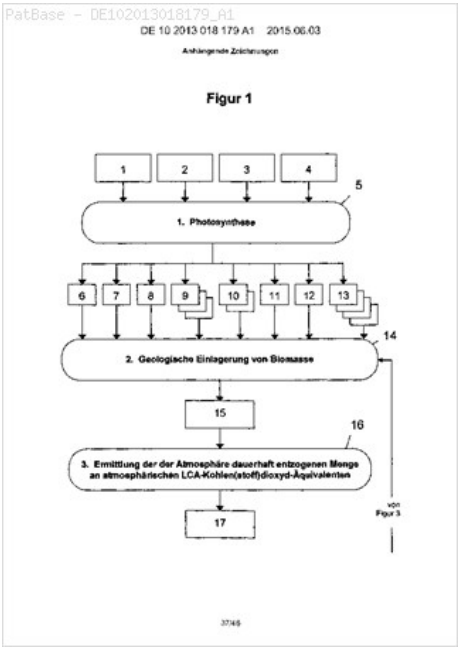

Family:

Publication number	Publication date	Application number	Application date
DE102013018179 A1	20150603	DE201310018179	20131129

Priority:

DE201310018179 20131129

Probable Assignee: FELDMANN MICHAEL

Assignee(s): (std): FELDMANN MICHAEL