jesusvelasquez

Search history

Search 1: PN=(WO2013119507) (Results 1)

Search 2: [SP]: 1. a method of fracturing a subterranean formation comprising introducing a proppant stage into the subterranean formation, wherein the proppant stage comprises a fine textured foam containing: (i) a viscosified aqueous fluid having ultra lightweight (ulw) proppant suspended in the viscosified aqueous fluid and (ii) a gaseous fluid, wherein the gaseous fluid constitutes at least about 85 volume percent of the combination of gaseous fluid and aqueous fluid in the fine textured foam wherein the diameter of at least 70 percent gas volume of the bubbles of the fine textured foam is less than or equal to 0.18 mm and further wherein the proppant stage is introduced into the subterranean formation at a pressure sufficient to create or enlarge a fracture. 2. the method of claim 1, wherein the diameter of the bubbles of the fine textured foam is between from about 0.01 to about 0.10 mm. 3. the method of claim 1, wherein the diameter of at least 80 percent gas volume of the bubbles of the fine textured foam is less than or equal to 0.18 mm. 4. the method of claim 3, wherein the diameter of the bubbles of the fine textured foam is between from about 0.01 to about 0.10 mm. 5. the method of claim 3, wherein the diameter of at least 90 percent gas volume of the bubbles of the fine textured foam is less than or equal to 0.18 mm. 6. the method of claim 5, wherein the diameter of the bubbles of the fine textured foam is between from about 0.01 to about 0.10 mm. 7. the method of claim 1, wherein the amount of proppant suspended in the viscosified aqueous fluid is that sufficient to create a partial monolayer of proppant in the fracture. 8. the method of claim 1, wherein the apparent specific gravity of the ulw proppant is less than or equal to 2.25. 9. the method of claim 8, wherein the apparent specific gravity of the ulw proppant is less than or equal to 1.75. 10. the method of claim 9, wherein the apparent specific gravity of the ulw proppant is less than or equal to 1.25. 11. the method of claim 1, wherein the viscosified aqueous fluid contains a viscoelastic surfactant. 12. the method of claim 1, wherein the gaseous fluid is nitrogen, carbon dioxide or a combination thereof. 13. a method of fracturing a subterranean formation comprising: (a) pumping into the formation a proppant stage comprising a fine textured foam, the fine textured foam prepared by: (i) suspending an ultra lightweight (ulw) proppant in a viscosified aqueous fluid and then (ii) combining the viscosified aqueous fluid with a gaseous fluid wherein the gaseous fluid constitutes at least about 85 volume percent of the combination of gaseous fluid and aqueous fluid in the fine textured foam and (b) creating or enlarging a fracture in the subterranean formation. 14. the method of claim 13, wherein the viscosified aqueous fluid comprises between from about 6 to about 55 weight percent of ultra lightweight (ulw) proppant having an apparent specific gravity less than or equal to 2.25, 15. the method of claim 13, further comprising, prior to pumping the proppant stage into the subterranean formation, pumping a pad fluid comprising a gaseous fluid into the formation at a pressure sufficient to initiate a fracture. 16. the method of claim 15, wherein the pad fluid further contains a proppant. 17. the method of claim 16, wherein the pad fluid comprises a gaseous fluid and an aqueous fluid. 18. the method of claim 13, wherein the amount of proppant suspended in the viscosified aqueous fluid is that sufficient to create a partial monolayer of proppant in the fracture. 19. the method of claim 13, wherein the diameter of at least 70 percent gas volume of the bubbles of the fine textured foam is less than or equal to 0.18 mm. 20. the method of claim 19, wherein the diameter of at least 90 percent gas volume of the bubbles of the fine textured foam is less than or equal to 0.18 mm. 21. the method of claim 13, wherein the diameter of between about 70 to about 90 percent gas volume of the bubbles is from about 0.01 to about 0.10 mm. 22. the method of claim 13, wherein the viscosified aqueous fluid is added to the gaseous fluid in step (a) (ii). 23. the method of claim 13, wherein the gaseous fluid is added to the viscosified aqueous fluid in step (a) (ii). 24. a method of fracturing a subterranean formation comprising introducing a proppant stage into the fracture, wherein the proppant stage is a fine textured foam comprising a gaseous fluid and an ultra lightweight (ulw) proppant having an apparent specific gravity (asg) less than or equal to 2.25 suspended in a viscosified aqueous system and further wherein the gaseous fluid of the proppant stage is greater than 90 volume percent of the fluid in the proppant stage. 25. the method of claim 24, wherein the diameter of between about 50 to about 90 percent gas volume of the bubbles is from about 0.01 to about 0.10 mm. 26. the method of claim 24, wherein the gaseous fluid comprises at least 95 volume percent of the fluid in the proppant stage. (Results 537)

Search 3: TAC=(Vacuum and relief and device and for and fluid) (Results 1074)

Search 4: TAC=(Vacuum and relief and device and for and fluid) and EC=(F04B 49/00) (Results 0)

Search 5: TAC=(Vacuum and relief and device and for and fluid) and EC=(F04B) (Results 40)

Search 6: TAC=(Vacuum and relief and device and for and fluid) and EC=(F04B49) (Results 10)

Search 7: TAC=(ENDODONTIC and DENTAL and IMPLANT) (Results 47)

Search 8: TAC=(ENDODONTIC and DENTAL and IMPLANT) and EC=(a61c 5/08) (Results 0)

Search 9: TAC=(ENDODONTIC and DENTAL and IMPLANT) and EC=(a61c) (Results 25)

1) Family number: 7571893 (US4175565A)

© PatBase

Title: Method and apparatus for stimulating osteogenic activity in bone structure adjacent a **dental** **implant**

Abstract: Source: US4175565A An electroconductive **dental** **implant** is permanently imbedded in the jawbone of the subject, with a portion thereof extending into the oral cavity which is connected to a current source to act as a cathode. A second electroconductive electrode is non-permanently affixed to the skin of the subject, preferably at the ear, and connected to the source to act as an anode. The direct current applied to the **implant** and the electrode is preferably regulated so as to maintain a substantially constant current level throughout the application thereof. A continuous current, preferably of 200 microamperes or less is applied intermittently for relatively short periods not exceeding approximately one hour in duration. In this manner, osteogenic activity in the bone structure adjacent to the contours of the **dental** **implant** is stimulated in order to increase the rate of the normal healing process.

Classifications:
International (IPC 8-9): A61B17/58 A61C13/30 A61C8/00 A61N1/05 A61N1/20 A61N1/372 (Advanced/Invention);
A61F2/28 (Advanced/Non-invention)
International (IPC 1-7): A61N1/20
CPC: A61B17/58 A61C8/00 A61C8/0007 A61C13/30 A61F2002/2821 A61N1/0548 A61N1/205 A61N1/372
European: A61B17/58 A61C13/30 A61C8/00 A61C8/00C1A3 A61N1/05K5 A61N1/20P A61N1/372 K61F2/28E K61N1/05K5
US: 433/174 433/176 433/32 607/51 607/52 607/64 607/75

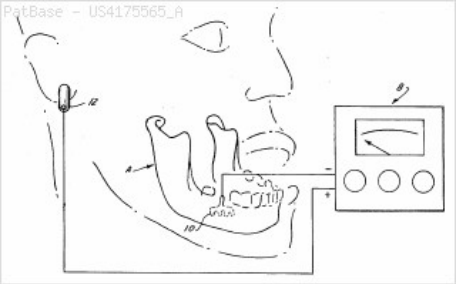

Family:

Publication number	Publication date	Application number	Application date
US4175565 A	19791127	US19770808724	19770622

Priority:
US19770808724 19770622

Probable Assignee: ORATRONICS INC
Assignee(s): (std)**:** ORATRONICS INC
Inventor(s): (std)**:** CHIARENZA ANGELO R ; WEISS CHARLES M

2) Family number: 1366892 (US4283176A)

© PatBase

Title: **Endodontic-**prosthetic stabilization system

Abstract: Source: US4283176A An **endodontic** **implant** comprises a smooth, non-threaded partially tapered shank having an integral crown portion on which an artificial tooth crown or denture is supported. The shank is **implanted** in the root canal of a tooth stump and through its apex into the jawbone of a patient. The shank is preferably provided with two tapered sections with an intermediate section of constant diameter and is dimensioned so as to occupy the whole of a root canal cavity when **implanted** therein. Preferably the **implants** are used in pairs, rigidly connected by a bar device to which a denture can be removably attached. The system anchors mobile teeth and prevents root resorption caused by instability.

Classifications:
International (IPC 8-9): A61C13/30 A61C8/00 A61C8/02 (Advanced/Invention); A61C13/225 A61C8/00 A61C8/02 (Core/Invention)
International (IPC 1-7): A61C13/22 A61C13/30 A61C5/08 A61C8/00
CPC: A61C13/30
European: A61C13/30
US: 433/173 433/220

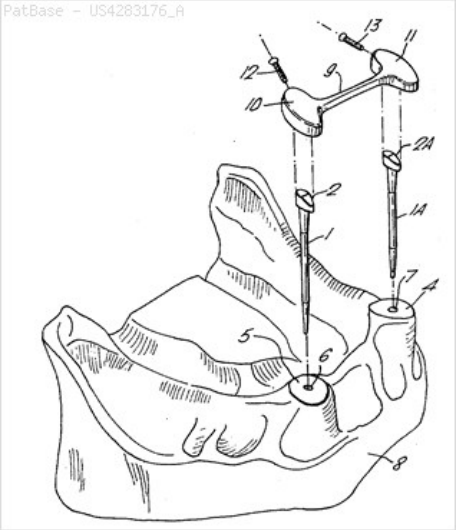

Family:

Publication number	Publication date	Application number	Application date
AU197950981 A1	19800403	AU19790050981	19780925
AU529484 B2	19830609	AU19790050981	19780925
CH641946 A	19840330	CH19790008421	19790918
DE2936690 A1	19800410	DE19792936690	19790911
GB2030866 A1	19800416	GB19790006209	19790221
GB2030866 B2	19830330	GB19790006209	19790221
IL56730 A0	19790531	IL19790056730	19790223
IL56730 A1	19811130	IL19790056730	19790223
IT1101250 A	19850928	IT19780031151	19781221
IT7831151 A0	19781221	IT19780031151	19781221
JP55045491 A2	19800331	JP19790102836	19790814
US4283176 A	19810811	US19790013115	19790221

Priority:
AU19780006099 19780925 AU19790050981 19790919

Probable Assignee: VAJDA T T
Assignee(s): (std): VAJDA T ; VAJDA T T ; VAJDA TIBOR T ; VAJDA TIBOR TIMOTHY ; TAIBAA CHIMOSHII BAADA
Assignee(s): TIBOR TIMOTHY VAJDA
Inventor(s): (std): VAJDA TIBOR TIMOTHY ; VAJDA TIBOR T ; TAIBAA CHIMOSHII BAADA
Inventor(s): TIBOR TIMOTHY VAJDA ; TIMOTHY VAJDA TIBOR
Agent(s): BENJAMIN J BARISH

3) Family number: 3860240 (US4408990A)

© PatBase

Title: **Endodontic dental implant**

Abstract: Source: US4408990A An **endodontic implant** for insertion into the jawbone of a patient through a bore formed in a tooth to stabilize the tooth. The **implant** comprises an elongated post having sides tapering inward from a larger diameter first end to a smaller diameter second end. A plurality of external threads are formed on the post and extend along the length of the post from the first and second ends for a predetermined distance. An intermediate, tapered, smooth-sided section is formed on the post between the first and second threaded portions.

Classifications:
International (IPC 8-9): A61C8/00 A61C8/02 (Advanced/Invention);
A61C8/00 A61C8/02 (Core/Invention)
International (IPC 1-7): A61C5/08
CPC: A61C8/0004
European: A61C8/00C1
US: 433/220 433/224

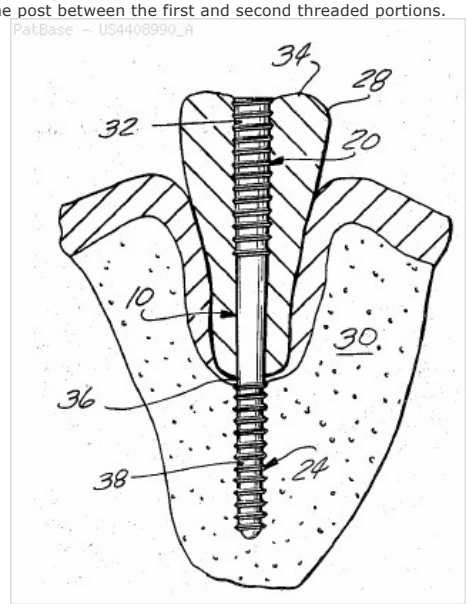

Family:

Publication number	Publication date	Application number	Application date
US4408990 A	19831011	US19820372080	19820426

Priority:
US19820372080 19820426

Probable Assignee: MISCH CARL E
Assignee(s): (std): MISCH CARL E
Inventor(s): (std): MISCH CARL E

4) Family number: 4977074 (US4575340A)

© PatBase

Title: Precision **dental** restorative system

Abstract: Source: US4575340A A prefabricated abutment of precise size, shape and dimensions is fixed in a patient's jawbone, as the supragingival part of an **endodontic** post, or an **implant**, for example. The post is used in combination with a prefabricated sleeve-like coping which is telescopically mated to the post with a high degree of dimensional precision. A finished crown is fixed rigidly to such a coping, or replicates its internal dimensions, so as to use the post as its support.

Classifications:
International (IPC 8-9): A61C13/30 A61C8/00 (Advanced/Invention); A61C13/225 A61C8/00 (Core/Invention)
International (IPC 1-7): A61C13/20 A61C8/00
CPC: A61C8/0075 A61C8/0048 A61C8/005 A61C8/0054 A61C8/0066 A61C8/0069 A61C13/30
European: A61C13/30 A61C8/00G A61C8/00G1 A61C8/00G1P A61C8/00G2 K61C8/00G1C K61C8/00G1T
US: 433/173 433/221

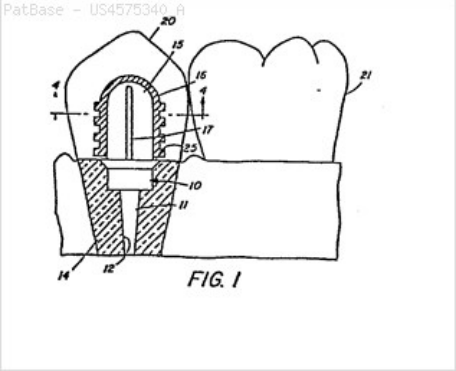

Family:

Publication number	Publication date	Application number	Application date
EP0190670 A2	19860813	EP19860101231	19860130
EP0190670 A3	19861112	EP19860101231	19860130
JP61228850 A2	19861013	JP19860022822	19860204
US4575340 A	19860311	US19850698677	19850204

Priority:

US19850698677 19850204

Probable Assignee: BRASSELER GMBH AND CO KG GEB

Assignee(s): (std): BRASSELER GMBH AND CO GEB KG ; BRASSELER GMBH AND CO KG GEB ; BURATSUSERAA GMBH AND CO KG ; LUSTIG LEOPOLD P

Assignee(s): RHONE POULENC AGROCHIMIE ; GEBR BRASSELER GMBH AND CO KG

Inventor(s): (std): LUSTIG LEOPOLD P ; LUSTIG LEOPOLD PAUL ; REOPORUDO POORU RASUTEIGU

Designated states: AT CH DE FR GB IT LI SE

5) Family number: 4602321 (EP0231838A2)

Title: **Dental implant**.

Abstract: An **endodontic implant** (1,11,17) made of a biologically compatible material possesses at least one marking section (4, 4') consisting of a material having a high X-ray contrast for the preparation of a high- contrast radiograph.

Classifications:
International (IPC 8-9): A61C8/00 (Advanced/Invention); A61B19/00 (Advanced/Non-invention)
International (IPC 1-7): A61C13/30 A61C8/00 A61F2/02 A61K49/04 A61K6/02 A61K6/04 A61K6/06 A61L27/00
CPC: A61B19/54 A61C8/00 A61C8/0012
European: A61C8/00 A61C8/00E K61B19/54

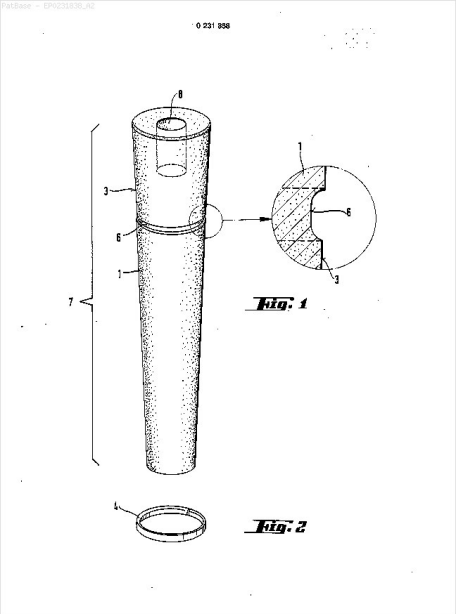

Family:

Publication number	Publication date	Application number	Application date
DE3602721 A1	19870820	DE19863602721	19860130
EP0231838 A2	19870812	EP19870100974	19870123
EP0231838 A3	19871014	EP19870100974	19870123

Priority:
DE19863602721 19860130

Probable Assignee: FELDMUEHLE AG
Assignee(s): (std): FELDMUEHLE AG
Assignee(s): FELDMUEHLE AKTIENGESELLSCHAFT ; FELDMUHLE AKTIENGESELLSCHAFT
Inventor(s): (std): CHAMIER WILFRIED VON ; TETSCH PETER PROF DR DR ; VON CHAMIER WILFRIED
Designated states: AT BE CH DE ES FR GB GR IT LI LU NL SE

6) Family number: 4918593 (US5085586A)

Title: METHOD AND APPARATUS FOR INSTALLING A POST IN A TOOTH HAVING AN EXISTING **ENDODONTIC** OBTURATOR THEREIN

Abstract: Source: US5085586A Method of installing a post in a tooth having a metal obturator therein including the steps of drilling a borehole in the tooth with a tubular burr having a tubular opening therein of internal diameter at least slightly greater than the diameter of the obturator to thereby provide a borehole of selected internal diameter having the metal obturator remaining essentially therein, the obturator serving to assist in the guiding of the burr and inserting a tubular post into the borehole, the post receiving the metal obturator therein, the post extending partially above the top of the tooth for attachment of a crown or the like.

Classifications:
International (IPC 8-9): A61C13/30 A61C3/02 A61C5/11
A61C8/02 (Advanced/Invention);
A61C13/225 A61C3/02 A61C5/08 (Core/Invention)
International (IPC 1-7): A61C13/30 A61C5/02 A61C5/08 A61C8/02
CPC: A61C3/02 A61C13/30
European: A61C13/30 A61C3/02
US: 433/165 433/221 433/224

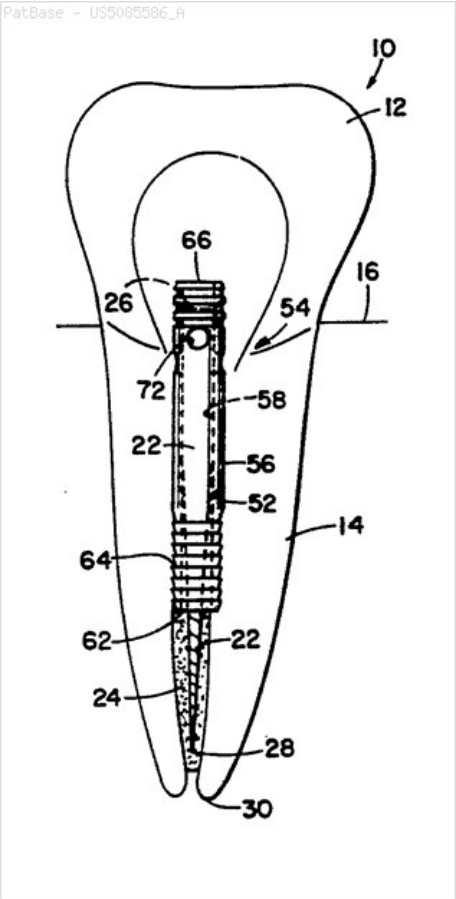

Family:

Publication number	Publication date	Application number	Application date
CA2088242 AA	19930127	CA19912088242	19910827
US5085586 A	19920204	US19900574214	19900828
US5161973 A	19921110	US19910736465	19910726
WO9203103 A2	19920305	WO1991US06134	19910827
WO9203103 A3	19920402	WO1991US06134	19910827

Priority:
US19900574214 19900828 US19910736465 19910726 WO1991US06134 19910827

Probable Assignee: DENTSPLY INT
Assignee(s): (std): JOHNSON WILLIAM B
Assignee(s): TULSA DENTAL PRODUCTS INC ; DENTSPLY INT ; DENTSPLY RESEARCH AND DEVELOPMENT CORP
Inventor(s): (std): JOHNSON WILLIAM B
Agent(s): SMART AND BIGGAR
Designated states: AT BE CA CH DE DK ES FR GB GR IT JP LU NL SE

7) Family number: 29533929 (DE19509080A1)

© PatBase

Title: Metal-ceramic composite casting useful as non-corroding **dental** prosthesis

Abstract: Source: DE19509080A1 Metal-ceramic composite castings comprise at least 3 of the following 4 layers, in the given sequence: (a) metallic base layer, pref. a **dental** alloy; (b) a layer of Al2O3, AlN and/or Si3N4, opt. contg. B2O3, a rare earth oxide or nitride, a Ti-gp. metal oxide or SiO2 as additive; (c) a sintered, cast, sprayed or pressed ceramic layer or a ceramic layer applied by CVD, sputtering or flame spraying; and (d) a metallic top layer, pref. of **dental** alloy, which is cast on (c) and is bonded permanently to (c) by composite formation during casting. The casting can be split between layers (a) and (b), within (b) and/or between (b) and (c); or layer (b) can be omitted, in which case layers (a) and (d) are bonded permanently through layer (c). Also claimed is a method for making the castings.

Classifications:
International (IPC 8-9): A61C13/00 A61K6/027 A61K6/04 A61K6/06 B32B7/06 C23C6/00 (Advanced/Invention)
International (IPC 1-7): A61C5/00 A61K6/00 B32B15/04 B32B18/00 C04B35/10 C04B35/14 C04B35/46 C04B35/58 C04B35/582 C04B35/5835 C04B35/596 C23C28/00
CPC: A61C13/0003 A61K6/046 B32B7/06 C23C6/00
European: A61C13/00C A61K6/04B B32B7/06 C23C6/00

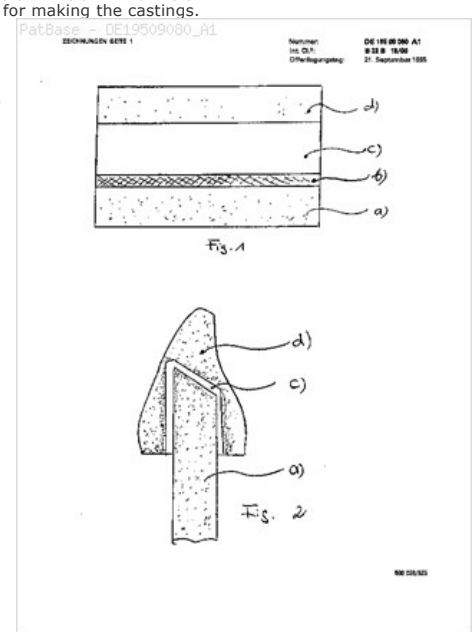

Family:

Publication number	Publication date	Application number	Application date
DE19509080 A1	19950921	DE19951009080	19950316
DE9404379 U1	19940519	DE19940004379U	19940317

Priority:
DE19940004379U 19940317 DE19951009080 19950316

Probable Assignee: WALL GISELHER
Assignee(s): (std): WALL GISELHER
Assignee(s): WALL GISELHER DR ; WALL GISELHER DR 97688 BAD KISSINGEN ; WALL GISELHER DR 97688 BAD KISSINGEN DE
Inventor(s): (std): WALL GISELHER DR

8) Family number: 28326539 (US2002162482A)

Title: METHOD FOR FABRICATING **ENDODONTIC**, ORTHODONTIC, AND DIRECT RESTORATIONS HAVING INFUSED CERAMIC NETWORK

Abstract: Source: US2002162482A A ceramic network for **endodontic**, orthodontic or restorative materials infused with a monomer, glass or metal alloy. After infusion of the monomer, glass or metal alloy, the monomer, glass or metal alloy is treated to form with the ceramic network an interpenetrating network of improved wear, resistance and flexibility.

Classifications:
International (IPC 8-9): A61C13/00 A61C13/083 A61C5/08 A61C7/14 A61C7/28 A61C8/00 A61K6/00 A61K6/02 A61K6/027 A61K6/04 A61K6/06 A61K6/08 A61K6/083 C04B35/622 C04B41/48 C04B41/52 C04B41/81 C04B41/83
C04B41/89 (Advanced/Invention);
A61C13/00 A61C13/08 A61C5/08 A61K6/02 C04B35/622 C04B41/45 C04B41/82
C04B41/89 (Core/Invention);
A61K (Subclass/Invention);
C04B (Subclass/Non-invention)
International (IPC 1-7): A61C13/00 A61C13/08 A61C13/083 A61C5/08 A61C7/14 A61C7/28 A61C8/00 A61K6/027 A61K6/06 A61K6/08 A61K6/083 B05D3/02 C04B33/32 C04B41/81 C08K3/00 C09K3/00
CPC: A61K6/0205 A61K6/0276 A61K6/06 C04B41/009 C04B2111/00836 A61K6/0008 A61K6/04 A61K6/0091 A61C13/0003 C04B35/622 C04B41/48 C04B41/483 C04B41/52 C04B41/83 C04B41/89 A61K6/083 Y10T428/31667
European: A61C13/00C A61K6/00D A61K6/02 A61K6/027D A61K6/02A A61K6/06 A61K6/083 C04B35/622 C04B41/00V C04B41/48 C04B41/48K C04B41/52 C04B41/83 C04B41/89 M04B111/00T54
US: 106/35 106/35P 264/16 264/19 264/628 264/643 264/651 427/2.26 427/2.27 427/314 428/426 428/428 428/432 428/446 428/451 523/115 523/116 523/213 524/430 524/442 524/444 524/492

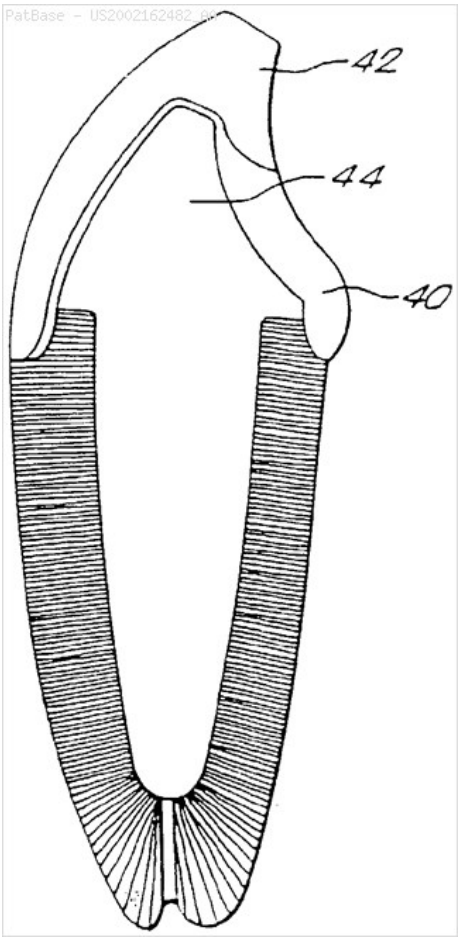

Family:

Publication number	Publication date	Application number	Application date
AT228815 E	20021215	AT19950114658T	19950918
AT395034 E	20080515	AT19990850177T	19991124
DE69529037 D1	20030116	DE19956029037	19950918
DE69529037 T2	20030828	DE19956029037T	19950918
DE69938707 D1	20080626	DE19996038707	19991124
DK0701808 T3	20030324	DK19950114658T	19950918
DK1006095 T3	20080908	DK19990850177T	19991124
EP0701808 A2	19960320	EP19950114658	19950918
EP0701808 A3	19960612	EP19950114658	19950918
EP0701808 B1	20021204	EP19950114658	19950918
EP1006095 A2	20000607	EP19990850177	19991124
EP1006095 A3	20030507	EP19990850177	19991124
EP1006095 B1	20080514	EP19990850177	19991124
EP1970043 A2	20080917	EP20080152831	19991124
EP1970043 A3	20140625	EP20080152831	19991124
ES2188630 T3	20030701	ES19950114658T	19950918
ES2307330 T3	20081116	ES19990850177T	19991124
HK1028392 A1	20081031	HK20000107784	20001205
HK1123498 A3	20090619	HK20090101185	20090210
JP2000185058 A2	20000704	JP19990333620	19991125
JP2004255201 A2	20040916	JP20040109957	20040402
JP3836896 B2	20061025	JP19950240127	19950919
JP3865981 B2	20070110	JP19990333620	19991125
JP4113854 B2	20080709	JP20040109957	19950919
JP4113854 B2	20080709	JP20040109957	20040402
JP9098990 A2	19970415	JP19950240127	19950919
PT1006095 T	20080730	PT19990850177T	19991124
PT701808 T	20030430	PT19950114658T	19950918
US2002162482 AA	20021107	US20020177430	20020621
US5843348 A	19981201	US19970854805	19970512
US6159417 A	20001212	US19980201455	19981130
US6271282 BA	20010807	US19990448056	19991123
US6881488 BB	20050419	US20020177430	20020621

Priority:

US19940307455 19940919 JP19950240127 19950919 US19990448056 19991123
US19990448050 19991123 US19980201455 19981130 US19970854805 19970512
EP19990850177 19991124 US20020177430 20020621

Probable Assignee: TRUSTEES OF BOSTON UNIVERSITY

Assignee(s): (std):	TRUSTEES OF BOSTON UNIV ; UNIV BOSTON
Assignee(s):	TRUSTEES OF BOSUTON UNIV ; TRUSTEES OF BOSTON UNIVERSITY ; TRUSTEES OF BOSTON UNIVERSITY BOSTON ; GIORDANO RUSSELL A
Inventor(s): (std):	GIORDANO RUSSEL ANTHONY II ; GIORDANO RUSSELL A ; RATSUSERU ANSONII JORUDANO ZA ; RATSUSERU EI JIYOODAANO ; GIORDANO RUSSEL ANTHONY
Inventor(s):	RUSSELL A GIORDANO ; RUSSELL GIORDANO A ; RUSSEL ANTHONY II GIORDANO
Agent(s):	HAMMOND ANDREW DAVID ET AL; VALEA AB; GAUTHIER AND CONNORS LLP
Designated states:	AT BE CH CY DE DK ES FI FR GB GR IE IT LI LU MC NL PT SE

9) Family number: 20681770 (US2004048949A)

© PatBase

Title: TRIAXIAL WEAVE FOR REINFORCING **DENTAL** RESINS

Abstract: Source: US2004048949A The present invention provides methods of constructing, reinforcing or modifying **dental** structures. The methods of the present invention include contacting a **dental** structure with **dental** resin and a triaxial material. In another aspect, the present invention provides **dental** structures including a triaxial material.

Classifications:
International (IPC 8-9): A61C13/00 A61C13/09 A61C13/23 A61C3/00 A61C5/04 A61C8/00 A61K6/02 A61K6/08 A61K6/083 A61K6/09 (Advanced/Invention); A61C13/00 A61C5/04 A61C8/00 A61K6/02 (Advanced/Non-invention)
International (IPC 1-7): A61C13/00 A61C13/23 A61C5/04 A61C8/00 A61F2/00 A61K6/02 C08K3/00
CPC: A61C5/007 A61C13/09 A61K6/083 A61K6/09
European: A61C13/09 A61K6/083 A61K6/09 K61C5/00S
US: 433/228.1 523/115 523/115S 523/116 523/118 523/120 523/222

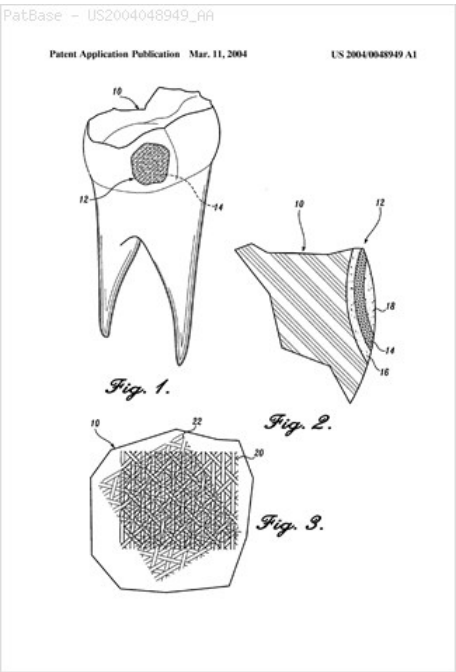

Family:

Publication number	Publication date	Application number	Application date
AT421311 E	20090215	AT19990951894T	19991008
AU199964237 A1	20000501	AU19990064237	19991008
AU199964237 A5	20000501	AU19990064237	19991008
BRPI9914372 A	20011204	BR1999PI14372	19991008
DE69940351 D1	20090312	DE19996040351	19991008
EP1121063 A1	20010808	EP19990951894	19991008
EP1121063 A4	20070502	EP19990951894	19991008
EP1121063 B1	20090121	EP19990951894	19991008
JP2002527363 T2	20020827	JP20000575436T	19991008
US2004048949 AA	20040311	US20030656088	20030905
US7186760 BB	20070306	US20030656088	20030905
WO0021454 A1	20000420	WO1999US23563	19991008

Priority:

US19980104265P 19981014 US19990807560 19991008 US20030656088 20030905
US20010807560 20010412 WO1999US23563 19991008

Probable Assignee: RIBBOND INC

Assignee(s): (std): DAVID N RUDO ; RIBBOND INC ; RUDO DAVID N

Inventor(s): (std): DAVID N RUDO ; RUDO DAVID N

Agent(s): TRANTER ANDREW DAVID ET AL; CHRISTENSEN OCONNOR JOHNSON KINDNESS PLLC

Designated states: AE AL AM AT AU AZ BA BB BE BF BG BJ BR BY CA CF CG CH CI CM CN CR CU CY CZ DE DK DM EE ES FI FR GA GB GD GE GH GM GN GR GW HR HU ID IE IL IN IS IT JP KE KG KP KR KZ LC LI LK LR LS LT LU LV MA MC MD MG MK ML MN MR MW MX NE NL NO NZ PL PT RO RU SD SE SG SI SK SL SN SZ TD TG TJ TM TR TT TZ UA UG US UZ VN YU ZA ZW

10) Family number: 30463554 (US2004072124A) © PatBase

Title: **ENDODONTIC** FILES MADE USING BULK METALLIC GLASSES

Abstract: Source: US2004072124A A medical **implant** or device comprising at least one component at least partially fabricated from an alloy having a composition represented by the general formula Xa Mb Alc, where X is Zr or Hf, M is at least one element selected from the group consisting of Mn, Fe, Co, Ni, Ti and Cu, and a, b and c are, in atomic percentages, 25<a<85, 5<b<70 and 0<c<35, the alloy comprising an amorphous phase as a volume fraction of at least 50 percent.

Classifications:
International (IPC 8-9): A61C5/02 A61C8/00 A61F2/28 A61L27/04 A61L31/02 B65D83/10 C22C14/00 C22C16/00 (Advanced/Invention); A61C5/02 A61C8/00 A61F2/28 A61L27/00 A61L31/02 B65D83/08 C22C14/00 C22C16/00 (Core/Invention);
A61F (Subclass/Invention)
International (IPC 1-7): A61C5/02 A61C8/00 A61F2/28 B65D83/10
CPC: A61C5/023 A61L27/04 A61L31/022
European: A61C5/02B1 A61L27/04 A61L31/02B
US: 206/369 433/102 433/201.1 623/23.53

Family:

Publication number	Publication date	Application number	Application date
AU2003245416 AA	20040430	AU20030245416	20030609
AU2003245416 AH	20090716	AU20030245416	20030609
US2004072124 AA	20040415	US20030457014	20031212
WO04024027 A2	20040325	WO2003US17998	20030609
WO04024027 A3	20090604	WO2003US17998	20030609

Priority:
US20020386455P 20020607 WO2003US17998 20030609 US20030457014 20031212

Probable Assignee: FLORIDA UNIV OF
Assignee(s): (std): KAUFMAN MICHAEL J ; SAWYER W GREGORY ; UNIV FLORIDA
Assignee(s): UNIVERSITY OF FLORIDA ; OF FLORIDA UNIV ; SAWYER W ; FLORIDA UNIV ; FLORIDA UNIV OF
Inventor(s): (std): KAUFMAN MICHAEL J ; SAWYER W GREGORY
Inventor(s): W ; W GREGORY SAWYER ; MICHAEL J KAUFMAN ; SAWYER W
Designated states: AE AG AL AM AT AU AZ BA BB BE BF BG BJ BR BY BZ CA CF CG CH CI CM CN CO CR CU CY CZ DE DK DM DZ EC EE ES FI FR GA GB GD GE GH GM GN GQ GR GW HR HU ID IE IL IN IS IT JP KE KG KP KR KZ LC LK LR LS LT LU LV MA MC MD MG MK ML MN MR MW MX MZ NE NL NO NZ OM PH PL PT RO RU SC SD SE SG SI SK SL SN SZ TD TG TJ TM TN TR TT TZ UA UG US UZ VC VN YU ZA ZM ZW

11) Family number: 32540794 (US2006008766A)

Title: **DENTAL** INSTRUMENTS MADE FROM SUPER-ELASTIC ALLOYS

Abstract: Source: US2006008766A **Dental** instruments and appliances made from a super-flexible alloy, which includes atoms from the group IV_B and group V_B transition metals and oxygen have superior strength and flexibility. The metal alloys are cold worked to increase the tensile strength of the **dental** instruments and appliances. Cold working the metal also increases the flexibility of the **dental** instruments and appliances. In one particular example a super-elastic **endodontic** file is described.

Classifications:
International (IPC 8-9): A61C13/00 A61C3/00 A61C3/02 A61C5/02 A61C5/04 A61C5/12 A61C7/14 A61C7/28 B23P13/00 (Advanced/Invention); A61C13/00 A61C3/00 A61C3/02 A61C5/00 A61C5/02 A61C5/04 A61C7/00 B23P13/00 (Core/Invention)
CPC: Y10T29/49567 A61C3/02 A61C3/06 A61C5/023 A61C5/122 A61C7/12 A61C8/0012 A61C2201/00 B23D73/00 B23P15/00 C22C27/02
European: A61C3/02 A61C3/06 A61C5/02B1 A61C5/12D A61C7/12 A61C8/00E B23D73/00 B23P15/00 C22C27/02 K61C201/00
US: 29/896.1 29/896.100P 433/102 433/102P 433/139 433/139S 433/165 433/165S 433/20 433/20S 433/39 433/39S 433/8 433/8S

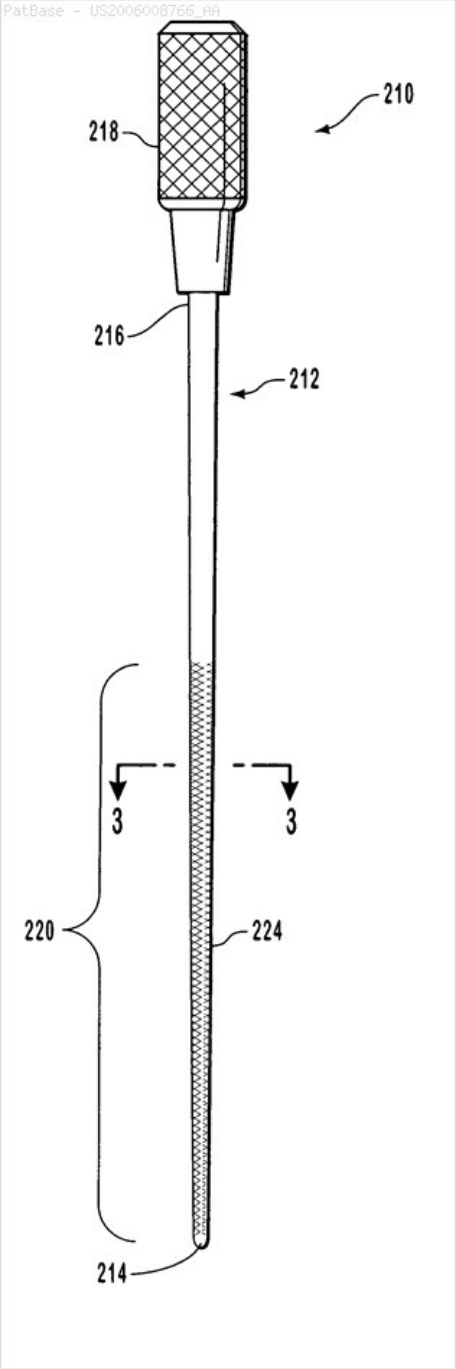

Family:

Publication number	Publication date	Application number	Application date
BRPI0520334 A2	20090505	BR2005PI20334	20051026
CN101227871 A	20080723	CN200580050956	20051026
EP1903973 A2	20080402	EP20050817236	20051026
EP1903973 A4	20090902	EP20050817236	20051026
JP2009500103 T2	20090108	JP20080520230T	20051026
MX2007016579 A1	20080304	MX20070016579	20071219
US2006008766 AA	20060112	US20050176839	20050707
US2009007431 AA	20090108	US20080210539	20080915
WO07008243 A2	20070118	WO2005US39935	20051026
WO07008243 A3	20070927	WO2005US39935	20051026

Priority:

US20040586738P 20040709 US20050176839 20050707 WO2005US39935 20051026 US20080210539 20080915

Probable Assignee: ULTRADENT PRODUCTS INC

Assignee(s): (std): FISCHER DAN E ; ULTRADENT PRODUCTS INC

Inventor(s): (std): FISCHER DAN E

Inventor(s): DAN E FISCHER ; FISCHER DAN

Agent(s): GRUENECKER KINKELDEY STOCKMAIR AND SCHWANHAEUSSER ANWALTSSOZIETAET; WORKMAN NYDEGGER, (F/K/A WORKMAN NYDEGGER AND SEELEY); WORKMAN NYDEGGER F K A WORKMAN NYDEGGER AND SEELEY; WORKMAN NYDEGGER, 1000 EAGLE GATE TOWER; WORKMAN NYDEGGER 1000 EAGLE GATE TOWER

Designated states: AE AG AL AM AT AU AZ BA BB BE BF BG BJ BR BW BY BZ CA CF CG CH CI CM CN CO CR CU CY CZ DE DK DM DZ EC EE EG ES FI FR GA GB GD GE GH GM GN GQ GR GW HR HU ID IE IL IN IS IT JP KE KG KM KP KR KZ LC LI LK LR LS LT LU LV LY MA MC MD MG MK ML MN MR MW MX MZ NA NE NG NI NL NO NZ OM PG PH PL PT RO RU SC SD SE SG SI SK SL SM SN SY SZ TD TG TJ TM TN TR TT TZ UA UG US UZ VC VN YU ZA ZM ZW

12) Family number: 34064704 (US2007003902A)

Title: AUXILIARY APPARATUS FOR **DENTAL** TREATMENTS

Abstract: Source: US2007003902A An auxiliary apparatus (1) for **dental** treatments comprises at least: a main body (2) constituting a power unit that drives handpieces (5) used for traditional conservative, **implant** and/or **endodontic** operations and in turn connected to the unit (2) through a connecting tube (3); handpiece (5) activation and adjustment means (4) located on a surface (2 a) of the main body (2) and controlled by a microprocessor unit (6) for controlling the main and auxiliary functions of the handpiece (5) applied to the unit (2); a data display screen (7) mounted on the main body (2); an interface unit (8) connected, on one side, to the microprocessor (6) and, on the other, to the screen (7) and designed to receive from the microprocessor (6) at least one signal (S) corresponding to a data item (D) that is a function of the torque value (V 5) of the handpieces (5) being used and to convert it into at least one graphic viewing field (CV) on the screen (7) in real time so as display the graph (TR) of torque over time (t) corresponding to the use of the connected handpiece (5). [Fig. 1]

Classifications:
International (IPC 8-9): A61C1/00 A61C1/02 (Advanced/Invention); A61C1/00 (Core/Invention)
CPC: A61C1/0015 A61C1/186
European: A61C1/00C2 K61C1/18D1
US: 433/98

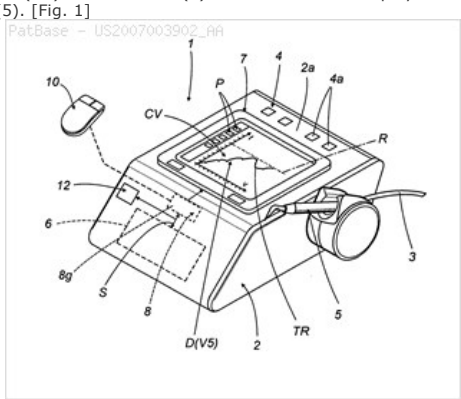

Family:

Publication number	Publication date	Application number	Application date
AT421296 E	20090215	AT20060115550T	20060615
DE602006004923 D1	20090312	DE200660004923T	20060615
EP1738712 A1	20070103	EP20060115550	20060615
EP1738712 B1	20090121	EP20060115550	20060615
ITBO20050439 A1	20070101	IT2005BO00439	20050630
US2007003902 AA	20070104	US20060454512	20060616

Priority:
IT2005BO00439 20050630

Probable Assignee: CASTELLINI SPA
Assignee(s): (std): CASTELLINI FRANCO ; CASTELLINI SPA
Assignee(s): CASTELLINI S P A ; CASTELLINI S P A CASTEL MAGGIORE
Inventor(s): (std): CASTELLINI FRANCO
Agent(s): LANZONI LUCIANO; FAY SHARPE FAGAN MINNICH AND MCKEE LLP
Designated states: AL AT BA BE BG CH CY CZ DE DK EE ES FI FR GB GR HR HU IE IS IT LI LT LU LV MC MK NL PL PT RO SE SI SK TR YU

13) Family number: 34968194 (EP1815816A1)

© PatBase

Title: Auxiliary apparatus for **dental** treatments

Abstract: Source: EP1815816A1 An auxiliary apparatus (1) for **dental** treatments comprises at least: a main body (2) constituting a power unit that drives handpieces (5) used for traditional conservative, **implant** and/or **endodontic** operations and in turn connected to the unit (2) through a connecting tube (3); handpiece (5) activation and adjustment means (4) located on a surface (2a) of the main body (2) and controlled by a microprocessor unit (6) for controlling the main and auxiliary functions of the handpiece (5) applied to the unit (2); viewing means (7) for displaying data relating to functional parameters of the handpiece (5) being used, said viewing means (7) being connected to the microprocessor control unit (6) through an interface (8) for transmitting and conditioning a signal that carries said data; means (8a) being provided for interpolating the data, in particular for obtaining the data in a displayable form in real time, the apparatus further comprises means (10) for comparing the data in order to provide an estimated information item (12) relating to the patient being treated.

Classifications:
International (IPC 8-9): A61C1/00 A61C19/04 (Advanced/Invention); A61C1/00 A61C19/04 (Core/Invention)
CPC: A61C1/0015 A61C1/186 A61C19/04
European: A61C1/00C2 A61C19/04 K61C1/18D1

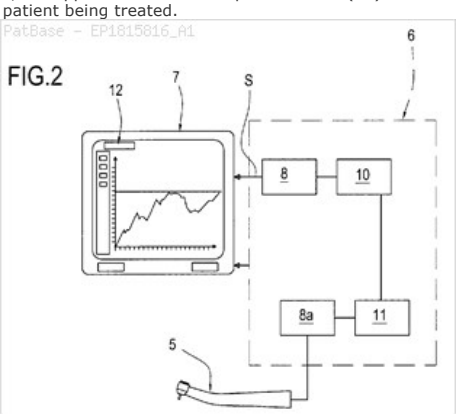

Family:

Publication number	Publication date	Application number	Application date
AT428366 E	20090515	AT20070101593T	20070201
DE602007000868 D1	20090528	DE200760000868T	20070201
EP1815816 A1	20070808	EP20070101593	20070201
EP1815816 B1	20090415	EP20070101593	20070201
ITBO20060064 A1	20070804	IT2006BO00064	20060203

Priority:
IT2006BO00064 20060203

Probable Assignee: CASTELLINI SPA
Assignee(s): (std): CASTELLINI SPA
Assignee(s): CASTELLINI S P A ; CASTELLINI S P A CASTEL MAGGIORE
Inventor(s): (std): CASTELLINI FRANCO
Agent(s): LANZONI LUCIANO
Designated states: AL AT BA BE BG CH CY CZ DE DK EE ES FI FR GB GR HR HU IE IS IT LI LT LU LV MC MK NL PL PT RO SE SI SK TR YU

14) Family number: 38290391 (EP1839620A1)

Title: Auxiliary apparatus for **dental** treatments

Abstract: Source: EP1839620A1 An auxiliary apparatus (1) for **dental** treatments comprises: a power unit (2) that drives handpieces used for traditional conservative, **implant** and/or **endodontic** operations and in turn connected to the unit (2), including a handpiece (5) adapted to impart sonic or ultrasonic vibrations to a file tip (6) used for treating root canals (8); handpiece (5) activation and adjustment means (4) controlled by a microprocessor (7); a unit (9) for measuring a given value (V) of an electrical quantity generated, in combination, by a first pole defined by the tip (6) and a second pole defined by a reference element (10) positioned near the root canal (8); a unit (11) for processing a respective signal (S) sent by the measuring unit (9) as a function of the value (V) of the electrical quantity in such a way as to transduce the signal (S) into a value (H) corresponding to the distance between the tip (6) and the apex of the root canal (8); means (12) for detecting the distance value (H), connected to the processing unit (11) and designed to issue a proportional audio/video signal (S1) as a function of the distance (H) between the tip (6) and the root canal apex.

Classifications:
International (IPC 8-9): A61C19/04 (Advanced/Invention);
A61C19/04 (Core/Invention)
CPC: A61C1/0015 A61C1/07 A61C19/041 A61C19/042
European: A61C19/04L K61C1/00C2 K61C1/07 K61C19/04M

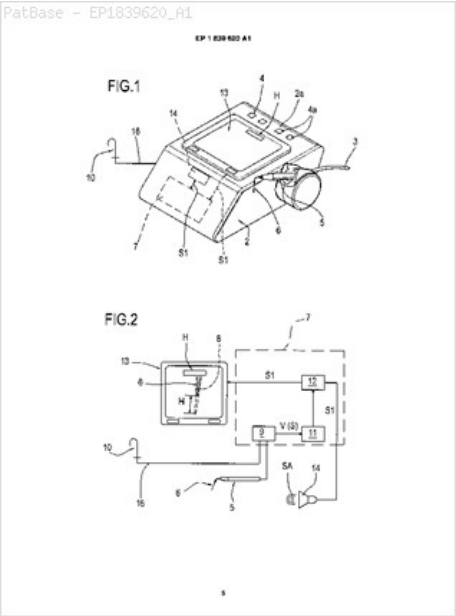

Family:

Publication number	Publication date	Application number	Application date
DE602007001613 D1	20090903	DE200760001613T	20070329
EP1839620 A1	20071003	EP20070105192	20070329
EP1839620 B1	20090722	EP20070105192	20070329
ITBO20060233 A1	20071001	IT2006BO00233	20060331

Priority:
IT2006BO00233 20060331

Probable Assignee: CASTELLINI SPA
Assignee(s): (std): CASTELLINI SPA
Assignee(s): CASTELLINI S P A ; CASTELLINI S P A CASTEL MAGGIORE
Inventor(s): (std): CASTELLINI FRANCO
Agent(s): LANZONI LUCIANO
Designated states: AL AT BA BE BG CH CY CZ DE DK EE ES FI FR GB GR HR HU IE IS IT LI LT LU LV MC MK MT NL PL PT RO SE SI SK TR YU

15) Family number: 41084479 (WO08007018A1) © PatBase

Title: ADJUSTABLE STOP DEVICE FOR DENTISTRY INSTRUMENT

Abstract: The invention relates to a stop device for dentistry contra-angles, such as **endodontics** or **implant** surgery contra-angles, device of the type comprising means of locking with a head of the contra-angle holding the **dental** instrument, and an extension determining the depth of the work, characterized in that it is composed of a shell (2) having a bottom (4) extended on its periphery by a perpendicular cover (5) so as to form internally a cavity in a shape complementary to that of the lower part of the head of the contra-angle, the bottom (4) comprising a central bore for the passage of the instrument, the bottom (4) being extended contrary to the cover (5) by a hollow cylindrical extension positioned coaxially with respect to the instrument and around it, and the total length of which is variable and adjustable.

Classifications:
International (IPC 8-9): A61C1/08 A61C1/12 A61C5/02
A61C8/00 (Advanced/Invention);
A61C1/08 A61C5/02 A61C8/00 (Core/Invention)
CPC: A61B17/1633 A61B2019/306 A61C1/084 A61C1/12 A61C5/025
European: A61B17/16D14 A61C1/08F1 A61C5/02B2 K61B19/30F4 K61C1/12

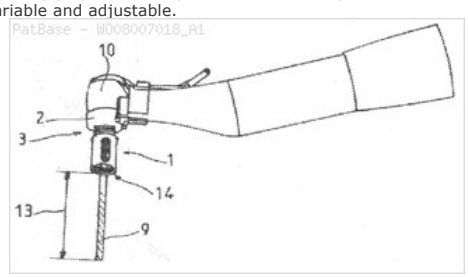

Family:

Publication number	Publication date	Application number	Application date
EP2046232 A1	20090415	EP20070823559	20070710
FR2903592 A1	20080118	FR20060006404	20060713
FR2903592 B1	20090213	FR20060006404	20060713
WO08007018 A1	20080117	WO2007FR51636	20070710
WO08007018 B1	20080327	WO2007FR51636	20070710

Priority:
FR20060006404 20060713 WO2007FR51636 20070710

Probable Assignee: MICRO MEGA INT MFG SA

Assignee(s): (std): MICRO MEGA INT MFG SA ; PERNOT JACQUES

Assignee(s): MICRO MEGA INT MANUFACTURES ; MICRO MEGA INTERNATIONAL MANUFACTURES ; MICRO MEGA INTERNATIONAL MANUFACTURES SOCIETE ANONYME

Inventor(s): (std): PERNOT JACQUES

Inventor(s): JACQUES PERNOT

Agent(s): POUPON MICHEL; CABINET MICHEL POUPON

Designated states: AE AG AL AM AT AU AZ BA BB BE BF BG BH BJ BR BW BY BZ CA CF CG CH CI CM CN CO CR CU CY CZ DE DK DM DO DZ EC EE EG ES FI FR GA GB GD GE GH GM GN GQ GR GT GW HN HR HU ID IE IL IN IS IT JP KE KG KM KN KP KR KZ LA LC LI LK LR LS LT LU LV LY MA MC MD ME MG MK ML MN MR MT MW MX MY MZ NA NE NG NI NL NO NZ OM PG PH PL PT RO RS RU SC SD SE SG SI SK SL SM SN SV SY SZ TD TG TJ TM TN TR TT TZ UA UG US UZ VC VN ZA ZM ZW

16) Family number: 41451515 (US2008032262A) © PatBase

Title: **DENTAL** **IMPLANT** SYSTEM AND METHOD THEREOF

Abstract: Source: US2008032262A A **dental** **implant** system comprising an **implant** member, an abutment member and a transfer key with cooperatively engaging structures for ensuring proper alignment and orientation of an abutment assembled on the **implant** member and for preparing an accurate **dental** impression and mold which represents the implantation site and its relationship to adjacent teeth structures. A **dental** reconstruction method utilizing the **dental** **implant** system of the present invention is also disclosed.

Classifications:
International (IPC 8-9): A61C13/225 A61C13/38 A61C3/00
A61C8/00 (Advanced/Invention);
A61C3/00 A61C8/00 (Core/Invention)
International (IPC 1-7): A61C8/00
CPC: A61C8/0059 A61C8/0071 A61C8/0001 A61C8/0018 A61C8/0022 A61C8/0048 A61C8/005 A61C8/0054 A61C8/006 A61C8/0066 A61C8/0069 A61C8/0087 A61C8/0089 A61C2008/0046
European: A61C8/00B A61C8/00F A61C8/00F2 A61C8/00G A61C8/00G1 A61C8/00G1H A61C8/00G1P A61C8/00G1T A61C8/00S A61C8/00T K61C8/00F30T K61C8/00G1C K61C8/00G1F K61C8/00G1H K61C8/00G1T K61C8/00G1T1
US: 433/141 433/141S 433/172 433/173 433/173P 433/174 433/174P

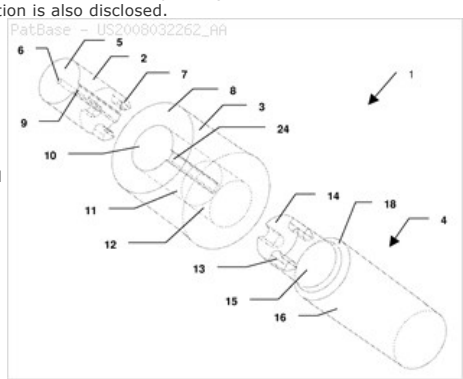

Family:

Publication number	Publication date	Application number	Application date
AU2007281254 AA	20080207	AU20070281254	20070731
CA2658771 AA	20090122	CA20072658771	20070731
CN101505678 A	20090812	CN200780027055	20070731
EP2046238 A2	20090415	EP20070799937	20070731
EP2046238 A4	20101110	EP20070799937	20070731
EP2046238 B1	20150617	EP20070799937	20070731
IN01170DN2009 A	20100820	IN2009DN01170	20090218
US2008032262 AA	20080207	US20060615131	20061222
US2008032263 AA	20080207	US20070737687	20070419
US2008254411 AA	20081016	US20070092900	20070731
US2013260336 AA	20131003	US20130900888	20130523
US8469710 BB	20130625	US20070092900	20070731
US8734155 BB	20140527	US20130900888	20130523
WO08016917 A2	20080207	WO2007US74847	20070731
WO08016917 A3	20090402	WO2007US74847	20070731

Priority:

US20060834891P 20060801 US20060615131 20061222 WO2007US74847 20070731
US20070092900 20070731 US20070737687 20070419 US20080092900 20080507
US20130900888 20130523

Probable Assignee: BONDAR VITALI

Assignee(s): (std)**:** BONDAR VITALI ; VITALI BONDAR

Inventor(s): (std)**:** BONDAR VITALI ; VITALI BONDAR

Agent(s): FB RICE; BERESKIN AND PARR LLP SENCRL SRL; HOCKING ADRIAN NIALL; NOTARO AND MICHALOS; NOTARO MICHALOS AND ZACCARIA P C; NOTARO MICHALOS AND ZACCARIA PC; MICHALOS PETER C ET AL

Designated states: AE AG AL AM AT AU AZ BA BB BE BF BG BH BJ BR BW BY BZ CA CF CG CH CI CM CN CO CR CU CY CZ DE DK DM DO DZ EC EE EG ES FI FR GA GB GD GE GH GM GN GQ GR GT GW HN HR HU ID IE IL IN IS IT JP KE KG KM KN KP KR KZ LA LC LI LK LR LS LT LU LV LY MA MC MD ME MG MK ML MN MR MT MW MX MY MZ NA NE NG NI NL NO NZ OM PG PH PL PT RO RS RU SC SD SE SG SI SK SL SM SN SV SY SZ TD TG TJ TM TN TR TT TZ UA UG US UZ VC VN ZA ZM ZW

17) Family number: 41833279 (US2008213727A)

Title: GRADED GLASS/CERAMIC/GLASS STRUCTURES FOR DAMAGE RESISTANT CERAMIC **DENTAL** AND ORTHOPEDIC PROSTHESES

Abstract: Source: US2008213727A The present invention provides a functionally graded glass/ceramic/glass sandwich system especially useful in damage resistant, ceramic **dental** and orthopedic prosthesis. The functionally graded glass/substrate/glass composite structure comprises an outer (aesthetic) residual glass layer, a graded glass-ceramic layer, and a dense interior ceramic. The functionally graded glass/substrate/glass composite structure may further comprise a veneer on an exterior surface. The present invention also provides a method for preparing a functionally graded glass/ceramic/glass sandwich system. A powdered glass-ceramic composition or a glass tape is applied to the accessible surfaces of a dense alumina substrate to thereby substantially cover the substrate surfaces. The glass of the composition has a CTE similar to that of the substrate material. The glass-ceramic composition is infiltrated into the dense substrate by heating the assembly to temperatures 50-700 degrees centigrade below the sintering temperature of the substrate.

Classifications:
International (IPC 8-9): A61C13/08 A61C13/083 A61C13/09 A61L27/30 A61L33/00 B32B17/06 C03C14/00 (Advanced/Invention);
A61C13/08 C03C14/00 (Core/Invention)
CPC: A61C13/083 C03C14/00
European: A61C13/083 C03C14/00
US: 219/686 264/432 427/2.1 427/2.24 427/2.26 427/2.27 427/2.270S 427/2.29 427/331 427/372.2 427/384 428/426 428/426S 428/428 428/432 428/432S 433/201.1 433/201.100P 433/204 433/212.1 433/212.100S 501/32 501/32S

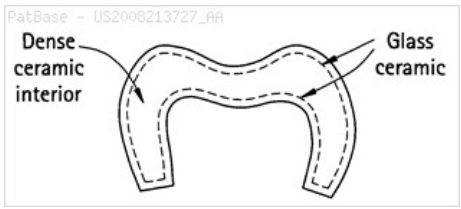

Family:

Publication number	Publication date	Application number	Application date
US2008213727 AA	20080904	US20070986290	20071120
US2011123956 AA	20110526	US20100927137	20101108
US7858192 BB	20101228	US20070986290	20071120
US8951597 BB	20150210	US20100927137	20101108
WO08063620 A1	20080529	WO2007US24208	20071120
WO08063620 C2	20080710	WO2007US24208	20071120

Priority:
US20060860165P 20061120 US20070986290 20071120 US20100927137 20101108

Probable Assignee: UNIV NEW YORK
Assignee(s): (std): KIM JAE WON ; THOMPSON VAN P ; UNIV NEW YORK ; ZHANG YU
Assignee(s): NEW YORK UNIV ; NEW YORK UNIVERSITY
Inventor(s): (std): KIM JAE WON ; THOMPSON VAN P ; ZHANG YU
Agent(s): KLAUBER AND JACKSON; KLAUBER AND JACKSON LLC; SMITH J DAVID
Designated states: AE AG AL AM AT AU AZ BA BB BE BF BG BH BJ BR BW BY BZ CA CF CG CH CI CM CN CO CR CU CY CZ DE DK DM DO DZ EC EE EG ES FI FR GA GB GD GE GH GM GN GQ GR GT GW HN HR HU ID IE IL IN IS IT JP KE KG KM KN KP KR KZ LA LC LK LR LS LT LU LV LY MA MC MD ME MG MK ML MN MR MT MW MX MY MZ NA NE NG NI NL NO NZ OM PG PH PL PT RO RS RU SC SD SE SG SI SK SL SM SN SV SY SZ TD TG TJ TM TN TR TT TZ UA UG US UZ VC VN ZA ZM ZW

18) Family number: 42078210 (US2010062390A)

Title: CORDLESS PRE-CALIBRATED TORQUE DRIVER WITH ABUTMENT HOLDER FOR **IMPLANT** PROSTHETICS AND METHODS OF USE

Abstract: Source: US2010062390A A cordless pre-calibrated torque driver with a detachable abutment holder for driving prosthetics on **dental implants**. The main object of the present invention is to provide a portable cordless driver for prosthetics on **implants** with a pre-calibrate torque. The pre-calibrated torque is achieved by a special embodied mechanism on the motor shaft. Another object of the present invention is to provide a portable pre-calibrated torque driver with a detachable abutment holder, which prevents torque delivery to the **implant** whenever an abutment is tightened or released from it. The holder also enables easy access to posterior **implants** and one sole hand practice. For that purpose, the present Invention further provides for an organizing device designed to be used along with a cordless driver that can unload the healing caps from the driver. Using a single hand, a dentist can quickly load and unload healing caps from **implants** to said organizer and back, and abutments with an attached holder from laboratory model to **implants** and back and without risking **implant** stability in the bone by torque delivery from the driver (typically 25 Ncm). These devices and methods significantly reduce chair time needed to restore **dental implants** and contribute to improve success rates of **implants**.

Classifications:
International (IPC 8-9): A61C1/12 A61C3/02 A61C8/00 B25B23/147 B65D85/24 (Advanced/Invention);
A61C1/08 A61C3/02 A61C8/00 B25B23/14 B65D85/20 (Core/Invention)
CPC: A61C1/12 A61C1/14 A61C1/186 A61C8/0089
European: A61C1/12 A61C8/00T K61C1/14 K61C1/18D1
US: 206/338 433/75

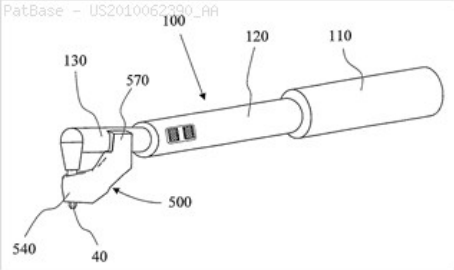

Family:

Publication number	Publication date	Application number	Application date
EP2124803 A2	20091202	EP20080702717	20080203
US2010062390 AA	20100311	US20080524945	20080203
WO08093345 A2	20080807	WO2008IL00138	20080203
WO08093345 A3	20081106	WO2008IL00138	20080203

Priority:

US20070898743P 20070201 US20070989743P 20071121 WO2008IL00138 20080203
US20080524945 20080203

Probable Assignee: OMPLANT LTD

Assignee(s): (std): HETSRONI BOAZ ; OMPLANT LTD

Inventor(s): (std): HETSRONI BOAZ

Agent(s): JEHAN ROBERT; PEARL COHEN ZEDEK LATZER LLP

Designated states: AE AG AL AM AO AT AU AZ BA BB BE BF BG BH BJ BR BW BY BZ CA CF CG CH CI CM CN CO CR CU CY CZ DE DK DM DO DZ EC EE EG ES FI FR GA GB GD GE GH GM GN GQ GR GT GW HN HR HU ID IE IL IN IS IT JP KE KG KM KN KP KR KZ LA LC LI LK LR LS LT LU LV LY MA MC MD ME MG MK ML MN MR MT MW MX MY MZ NA NE NG NI NL NO NZ OM PG PH PL PT RO RS RU SC SD SE SG SI SK SL SM SN SV SY SZ TD TG TJ TM TN TR TT TZ UA UG US UZ VC VN ZA ZM ZW

19) Family number: 42118554 (US2008206716A) © PatBase

Title: **ENDODONTIC** FILLING MATERIAL

Abstract: Source: US2008206716A The present invention is a bioactive **endodontic** material and its use for filling the tooth and bone cavities. The present invention, by using calcium salt, calcium oxide, calcium silicate, and calcium phosphate compounds as essential constituents, and mixing them with a water base solution, prepares a bioactive calcium and phosphate enriched material. The enriched material (cement) comprises high concentration of water-soluble calcium and phosphate, and immediately forms hydroxyapatite during and after setting. The cement is biocompatible, antibacterial, capable to form an effective seal against reentrance of microorganisms into the filled cavity, compatible to handle and set in an aqueous environment, and able to stimulate hard tissue healing.

Classifications:
International (IPC 8-9): A61C5/00 A61C5/02 A61C5/04 A61K33/42 A61K35/00 A61K38/20 A61K38/21 A61K38/43 A61K39/00 A61K9/00 A61K9/14 A61P1/02 A61P19/08 A61P29/00 A61P31/04 A61P31/12 B29B9/12 (Advanced/Invention)
CPC: A61C5/04 A61K6/0625
European: A61C5/04 A61K6/06E K61C5/04
US: 106/35 106/690 106/691 106/717 264/6 264/6S 424/184.1 424/184.100S 424/400 424/400S 424/489 424/489P 424/602 424/602S 424/603 424/603S 424/85.2 424/85.200S 424/85.4 424/85.400S 424/93.1 424/93.100S 424/94.1 424/94.100S 433/224 433/224S 433/226 433/228.1 433/228.100P 433/228.100S

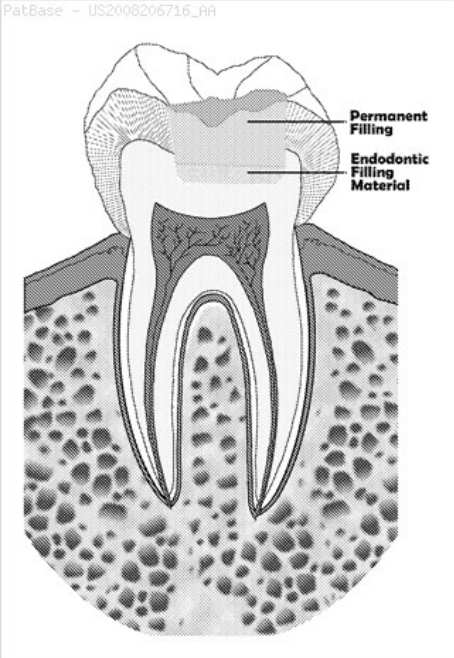

Family:

Publication number	Publication date	Application number	Application date
US2008206716 AA	20080828	US20070778118	20070716
US2011182995 AA	20110728	US20110078238	20110401
US7942961 BB	20110517	US20070778118	20070716
US8105086 BB	20120131	US20110078238	20110401
WO08102214 A2	20080828	WO2007IB50564	20070222
WO08102214 A3	20081127	WO2007IB50564	20070222
WO08102214 A4	20090212	WO2007IB50564	20070222

Priority:
WO2007IB50564 20070222 US20070778118 20070716 US20110078238 20110401

Probable Assignee: GHASSEMIAN POUR BAVANDI MADJID

Assignee(s): (std): ASGARY SAEED ; GHASSEMIAN POUR BAVANDI MADJID

Inventor(s): (std): ASGARY SAEED

Agent(s): BARRY CHOOBIN; BARRY; CHOOBIN AND CHOOBIN CONSULTANCY LLC; CHOOBIN AND CHOOBIN CONSULTANCY

Designated states: AE AG AL AM AT AU AZ BA BB BE BF BG BJ BR BW BY BZ CA CF CG CH CI CM CN CO CR CU CY CZ DE DK DM DZ EC EE EG ES FI FR GA GB GD GE GH GM GN GQ GR GT GW HN HR HU ID IE IL IN IS IT JP KE KG KM KN KP KR KZ LA LC LK LR LS LT LU LV LY MA MC MD MG MK ML MN MR MW MX MY MZ NA NE NG NI NL NO NZ OM PG PH PL PT RO RS RU SC SD SE SG SI SK SL SM SN SV SY SZ TD TG TJ TM TN TR TT TZ UA UG US UZ VC VN ZA ZM ZW

20) Family number: 43489223 (US2011027750A)

© PatBase

Title: **DENTAL** PACKAGE, AND METHOD OF PROVIDING A **DENTAL** MATERIAL FROM A PACKAGE

Abstract: Source: US2011027750A A device for providing a **dental** material, which comprises a compartment formed by first and second interconnected layers, and a well adjacent the compartment in the first layer. The second layer partially overlaps the well. The device helps the **dental** material to be used in a convenient manner, and may be relatively inexpensive to manufacture.

Classifications:
International (IPC 8-9): A61C1/14 A61C19/00 A61C19/02 A61C19/06 A61C5/00 A61C5/06 A61C7/00 A61M35/00 B65D81/32 (Advanced/Invention);
A61C1/08 A61C19/00 A61M35/00 (Core/Invention)
CPC: A61C5/06 A61C5/066 B65D81/3294
European: A61C5/06 A61C5/06C B65D81/32M
US: 433/215 433/215S 433/89 433/89P

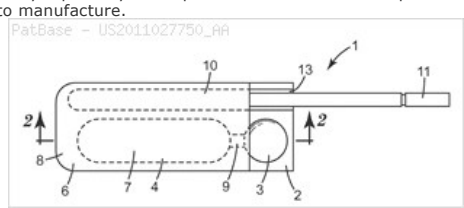

Family:

Publication number	Publication date	Application number	Application date
EP2231058 A1	20100929	EP20080867244	20081211
EP2231058 A4	20150429	EP20080867244	20081211
US2011027750 AA	20110203	US20080747235	20081211
WO09085636 A1	20090709	WO2008US86413	20081211

Priority:
US20070014930P 20071219 WO2008US86413 20081211 US20080747235 20081211

Probable Assignee: 3M INNOVATIVE PROPERTIES CO

Assignee(s): (std): BOEHM ANDREAS J ; PEUKER MARC ; POSCHMANN DIETER ; RUSIN RICHARD P ; 3M INNOVATIVE PROPERTIES CO

Assignee(s): 3M INNOVATIVE PROPERTIES COMPANY

Inventor(s): (std): BOEHM ANDREAS J ; PEUKER MARC ; POSCHMANN DIETER ; RUSIN RICHARD P ; DUBBE JOHN W

Agent(s): HOHMANN ARNO; 3M INNOVATIVE PROPERTIES COMPANY; 3M INNOVATIVE PROPERTIES CO; OLSON PETER L ET AL

Designated states: AE AG AL AM AO AT AU AZ BA BB BE BF BG BH BJ BR BW BY BZ CA CF CG CH CI CM CN CO CR CU CY CZ DE DK DM DO DZ EC EE EG ES FI FR GA GB GD GE GH GM GN GQ GR GT GW HN HR HU ID IE IL IN IS IT JP KE KG KM KN KP KR KZ LA LC LI LK LR LS LT LU LV LY MA MC MD ME MG MK ML MN MR MT MW MX MY MZ NA NE NG NI NL NO NZ OM PG PH PL PT RO RS RU SC SD SE SG SI SK SL SM SN ST SV SY SZ TD TG TJ TM TN TR TT TZ UA UG US UZ VC VN ZA ZM ZW

21) Family number: 45442978 (US2010150985A)

Title: **DENTAL** **IMPLANT**, **ENDODONTIC** INSTRUMENT, AND **DENTAL** FILLING MATERIAL COATED WITH A PEPTIDE-BASED ANTIMICROBIAL AND METHODS OF USING AND MAKING THE SAME

Abstract: Source: US2010150985A **Dental** **implants** and **endodontic** instruments are coated with an antimicrobial peptide-based coating. Methods of coating the **dental** **implants** and **endodontic** instruments with the antimicrobial peptide-based coating are disclosed together with treating a subject with the coated **dental** **implant** and **endodontic** instruments to prevent or lessen bacterial infections in the subject.

Classifications:
International (IPC 8-9): A61C5/04 A61C8/00 A61K38/02 A61K38/10 A61K38/16 A61P31/00 B05D3/00 (Advanced/Invention);
A61C5/04 A61C8/00 A61K38/02 A61K38/10 A61K38/16 A61P31/00 B05D3/00 (Core/Invention)
CPC: A61C5/025 A61C5/04 A61C8/0012 A61C8/0013
European: A61C5/04 A61C8/00E A61C8/00E1 K61C5/02B2
US: 424/435 427/2.26 427/2.260S 433/81 433/81S 514/1.1 514/1.100P 514/12 514/13 514/14 514/2 514/2.4 514/2.400S

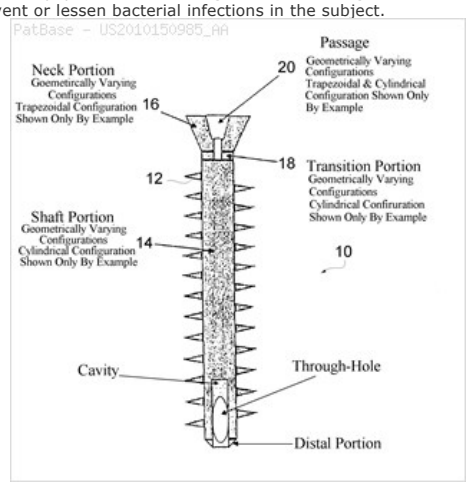

Family:

Publication number	Publication date	Application number	Application date
US2010150985 AA	20100617	US20080109105	20080424

Priority:
US20080109105 20080424

Probable Assignee: JUST GEORGE
Assignee(s): (std): JUST GEORGE ; POLK KENNETH J
Inventor(s): (std): JUST GEORGE ; POLK KENNETH J
Agent(s): BLYNN L SHIDELER BLK LAW GROUP

22) Family number: 49180706 (US2012258424A)

Title: **DENTAL** AUTO-MIXING METHOD, DEVICE, AND COMPOSITION FOR TEMPORARY CEMENTS

Abstract: Source: US2012258424A The abstract has been amended as follows: A method of dispensing a hardenable **dental** composition, which can form a temporary bond, comprising 1) providing multi-part hardenable **dental** composition comprising part (A) in the form of a paste comprising acid-reactive glass particles and a liquid selected from the group consisting of water, a monomer having at least one ethylenically 10 unsaturated group per monomer molecule, and a combination thereof; and part (B) comprising a water soluble polyacid and a liquid selected from the group consisting of water, a monomer having at least one ethylenically unsaturated group per monomer molecule, and a combination thereof; and 2) extruding the composition through a static mixer in fluid communication with a first reservoir containing the part (A) and a second reservoir 20 containing the part (B); wherein a plunger is positioned in each reservoir for simultaneously forcing part (A) and part (B) into the static mixer.

Classifications:
International (IPC 8-9): A61C13/23 A61C13/263 A61C5/06 A61F2/00 A61K6/00 A61K6/08 A61K6/083 (Advanced/Invention)
CPC: A61K6/083 A61C5/062 A61C5/064 A61K6/0017 A61K6/0023 A61K6/0835
European: A61C5/06A A61C5/06A2 A61K6/00A5 A61K6/00B A61K6/083M
US: 433/180 433/183 433/90 522/181 523/116

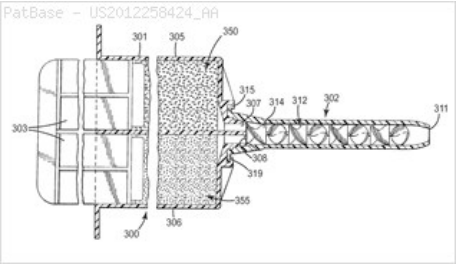

Family:

Publication number	Publication date	Application number	Application date
EP2519184 A1	20121107	EP20100841550	20101216
JP2013515775 T2	20130509	JP20120547115T	20101216
US2012258424 AA	20121011	US20100513879	20101216
US2014213686 AA	20140731	US20140242519	20140401
WO11081976 A1	20110707	WO2010US60709	20101216

Priority:

US20090290576P 20091229 WO2010US60709 20101216 US20100513879 20101216
US20140242519 20140401 US20120513879 20120605

Probable Assignee: 3M INNOVATIVE PROPERTIES CO

Assignee(s): (std): FALSAFI AFSHIN ; BUI HOA T ; OXMAN JOEL D ; PATEL ANUPA N ; 3M INNOVATIVE PROPERTIES CO

Assignee(s): 3M INNOVATIVE PROPERTIES COMPANY

Inventor(s): (std): BUI HOA T ; FALSAFI AFSHIN ; OXMAN JOEL D ; PATEL ANUPA N

Agent(s): VOSSIUS AND PARTNER; AOKI ATSUSHI; KOGA TETSUJI; ISHIDA TAKASHI; STEWART PAMELA L ET AL

Designated states: AE AG AL AM AO AT AU AZ BA BB BE BF BG BH BJ BR BW BY BZ CA CF CG CH CI CL CM CN CO CR CU CY CZ DE DK DM DO DZ EC EE EG ES FI FR GA GB GD GE GH GM GN GQ GR GT GW HN HR HU ID IE IL IN IS IT JP KE KG KM KN KP KR KZ LA LC LI LK LR LS LT LU LV LY MA MC MD ME MG MK ML MN MR MT MW MX MY MZ NA NE NG NI NL NO NZ OM PE PG PH PL PT RO RS RU SC SD SE SG SI SK SL SM SN ST SV SY SZ TD TG TH TJ TM TN TR TT TZ UA UG US UZ VC VN ZA ZM ZW

23) Family number: 49180704 (US2012295214A)

Title: **DENTAL** AUTO-MIXING METHODS, DEVICES, AND COMPOSITIONS

Abstract: Source: US2012295214A A method of dispensing a hardenable **dental** composition comprising 1) providing a two-part hardenable **dental** composition, and 2) extruding the composition through a static mixer in fluid communication with a first reservoir containing the first part and a second reservoir containing the second part, wherein a plunger is positioned in each reservoir for simultaneously forcing both parts into the static mixer, extruding the composition through the static mixer, and dispensing the composition, and wherein an extrusion force is applied to the plunger for extruding the composition through the static mixer without the aid of a mechanical advantage provided by an attached or external device. Also disclosed is a method of bonding a prosthetic device to a **dental** structure using the dispensing method, a device for dispensing the composition using the dispensing method, a kit comprising the device, and the composition used in the dispensing method.

Classifications:
International (IPC 8-9): A61C5/00 A61C5/02 A61C5/04 A61C5/06 A61C7/16 A61K6/00 A61K6/083 A61M5/19 (Advanced/Invention)
CPC: B01F13/0023 A61C5/062 A61C5/064 A61C9/0026 A61K6/0023 B01F5/0615 B01F13/002 B65D81/325
European: A61C5/06A A61C5/06A2 A61K6/00B A61M5/19 B01F13/00K2B B01F13/00K2B4 B01F5/06B3B6B B65D81/32F K61C9/00C
US: 433/217.1 433/224 433/228.1 433/24 433/90 523/116

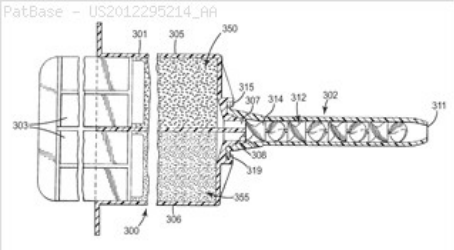

Family:

Publication number	Publication date	Application number	Application date
EP2519290 A1	20121107	EP20100841549	20101216
EP2519290 A4	20150610	EP20100841549	20101216
JP2013515588 T2	20130509	JP20120547114T	20101216
RU2012127442 A	20140210	RU20120127442	20101216
US2012295214 AA	20121122	US20100519805	20101216
WO11081975 A1	20110707	WO2010US60701	20101216

Priority:
US20090290538P 20091229 WO2010US60701 20101216 US20100519805 20101216

Probable Assignee: 3M INNOVATIVE PROPERTIES CO
Assignee(s): (std): FALSAFI AFSHIN ; OXMAN JOEL D ; TON TIFFANY T ; WANG YIZHONG ; 3M INNOVATIVE PROPERTIES CO
Assignee(s): 3M INNOVATIVE PROPERTIES COMPANY
Inventor(s): (std): FALSAFI AFSHIN ; OXMAN JOEL D ; TON TIFFANY T ; WANG YIZHONG
Agent(s): MICHALIK ANDREJ; STEWART PAMELA L ET AL
Designated states: AE AG AL AM AO AT AU AZ BA BB BE BF BG BH BJ BR BW BY BZ CA CF CG CH CI CL CM CN CO CR CU CY CZ DE DK DM DO DZ EC EE EG ES FI FR GA GB GD GE GH GM GN GQ GR GT GW HN HR HU ID IE IL IN IS IT JP KE KG KM KN KP KR KZ LA LC LI LK LR LS LT LU LV LY MA MC MD ME MG MK ML MN MR MT MW MX MY MZ NA NE NG NI NL NO NZ OM PE PG PH PL PT RO RS RU SC SD SE SG SI SK SL SM SN ST SV SY SZ TD TG TH TJ TM TN TR TT TZ UA UG US UZ VC VN ZA ZM ZW

24) Family number: 49823451 (US2011262882A) © PatBase

Title: NATURAL TOOTH REPLACEMENT (NTR): AN ALTERNATIVE TO TOOTH ROOT CANAL (RCT) THERAPY AND IMMEDIATE ROOT-FORM **IMPLANT** PLACEMENT INTO EXTRACTION SOCKET

Abstract: Source: US2011262882A The present invention relates to the method of replacing an infected, broken, decayed tooth that would otherwise require extraction or root canal therapy with a duplicate ceramic tooth **implant** uncoated or coated with a series of treatments and manufactured for compatibility by obtaining CAT-SCAN images of the tooth prior to extraction or by utilizing typical 'lost wax' duplicating technology. The invention give the dentist an alternative to performing a root canal procedure (**endodontic** procedure) on an infected tooth that presents the problematic and in most cases the impossible task of eliminating all the bacteria from the tooth interior and adjacent bone. The bacteriais problematic in that it causes adjacent **implants** to fail and thus it is presumed to cause other distal chronic inflammatory diseases if these "foci of infections" are not removed.

Classifications:
International (IPC 8-9): A61C8/00 (Advanced/Invention)
CPC: A61C8/0013 A61C8/0018 A61C8/0036
European: A61C8/00E1 A61C8/00F A61C8/00F9
US: 433/173 433/173P

PatBase - US2011262882_AA

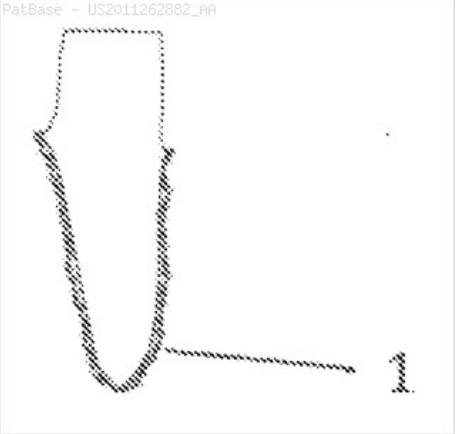

Family:

Publication number	Publication date	Application number	Application date
US2011262882 AA	20111027	US20110093688	20110425

Priority:
US20100343250P 20100426 US20110093688 20110425

Probable Assignee: NORDQUIST WILLIAM
Assignee(s): (std): NORDQUIST WILLIAM
Inventor(s): (std): NORDQUIST WILLIAM

25) Family number: 50963604 (US2013209951A) © PatBase

Title: SURFACE MODIFICATION FOR ENHANCED BONDING OF CERAMIC MATERIALS

Abstract: Source: US2013209951A A fluoride treated medical **implant**, such as a **dental** component, is provided, the medical **implant** comprising fluorinated metal oxide on the substrate surface. A method for the preparation of such treated **implants** is also provided, the method involving exposure of the medical **implant** to a fluorine-containing reagent. A **dental** structure is also provided, which includes a first **dental** component comprising a fluorinated metal oxide layer on its surface, a silane coupling agent, a **dental** cement, and a second **dental** component having a surface bonded to the **dental** cement. An additional **dental** structure, which includes a first **dental** component comprising a fluorinated metal oxide layer on its surface, a **dental** cement, and a second **dental** component having a surface bonded to the **dental** cement is also provided.

Classifications:
International (IPC 8-9): A61C5/02 A61C5/04 A61C5/08 A61C7/00 A61C7/14 A61C8/00 A61K6/02 A61K6/04 A61K6/08 A61L27/02 A61L27/30 (Advanced/Invention)
CPC: A61L2400/18 A61L2430/12 A61K6/0687 A61K6/0029 A61L27/50 A61C7/00 A61C5/02 A61C5/04 A61C5/08 A61C7/14 A61C8/00 A61C8/0015 A61K6/0225 A61K6/0235 A61K6/024 A61K6/04 A61K6/08
European: A61C8/00E1C
US: 427/2.27 433/102 433/173 433/215 433/218 433/228.1 433/8

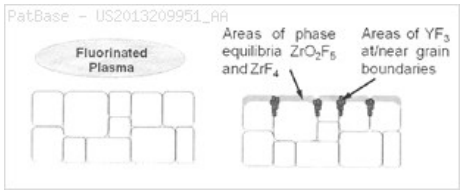

Family:

Publication number	Publication date	Application number	Application date
US2013209951 AA	20130815	US20110880277	20111020
WO12054702 A2	20120426	WO2011US57055	20111020
WO12054702 A3	20130425	WO2011US57055	20111020

Priority:
US20100394986P 20101020 WO2011US57055 20111020 US20110880277 20111020

Probable Assignee: RES TRIANGLE INST
Assignee(s): (std): PIASCIK JEFFREY ROBERT ; RES TRIANGLE INST ; STONER BRIAN R
Assignee(s): RESEARCH TRIANGLE INST ; RESEARCH TRIANGLE INSTITUTE
Inventor(s): (std): PIASCIK JEFFREY ROBERT ; STONER BRIAN R
Agent(s): GORCZYNSKI JESSICA L
Designated states: AE AG AL AM AO AT AU AZ BA BB BE BF BG BH BJ BR BW BY BZ CA CF CG CH CI CL CM CN CO CR CU CY CZ DE DK DM DO DZ EC EE EG ES FI FR GA GB GD GE GH GM GN GQ GR GT GW HN HR HU ID IE IL IN IS IT JP KE KG KM KN KP KR KZ LA LC LK LR LS LT LU LV LY MA MC MD ME MG MK ML MN MR MT MW MX MY MZ NA NE NG NI NL NO NZ OM PE PG PH PL PT QA RO RS RU RW SC SD SE SG SI SK SL SM SN ST SV SY SZ TD TG TH TJ TM TN TR TT TZ UA UG US UZ VC VN ZA ZM ZW