SUPERINTENDENCIA DE INDUSTRIA Y COMERCIO	
RAD: 13-253344- -4	**FECHA**: 2015-06-20 11:51:01
DEP: 2020 DIRECCION DE NUEVAS CREACIONES	**EVE:** 1 REGISTRO/DEPOSITO/CONCESION/DEPOSITO
TRA: 2 PATENTES DE INVENCION	**FOLIOS**: 6
ACT: 430 REQUERSOLICITA	

DIRECCIÓN DE NUEVAS CREACIONES

2020
Bogotá, D.C.,

Abogado(a)/Señor(a)
JOHAN SEBASTIAN GÓMEZ VILLA

Asunto: Radicación: 13-253344- -4
Trámite: 2
Evento: 1
Actuación: 430
Oficio: 6971
Folios: 6

Patente de Invención	X			Patente de Modelo de Utilidad	
Vía Nacional	X				
Vía PCT (Fase Nacional)		Capítulo I		Capítulo II	
No. Solicitud Internacional					
Fecha de Presentación Internacional					

Como resultado del examen de fondo realizado, con fundamento en el Artículo 45 de la Decisión 486 de la Comisión de la Comunidad Andina, se comunica:

1. Documentos estudiados

Descripción:	Rad. N° 13-253344-00000-0000	25/octubre/2013
Reivindicaciones:	Rad. N° 13-253344-00000-0000	25/octubre/2013
Dibujos:	Rad. N° 13-253344-00000-0000	25/octubre/2013

2. Objeto de la invención

De acuerdo con lo establecido en el numeral 1.2.2.2 del Capítulo Primero del Título X de la Circular Única para efectos del examen de patentabilidad, se tendrá en cuenta la tasa pagada por el solicitante al momento de comenzar el examen para las reivindicaciones adicionales; esto es que cuando la solicitud contenga más de diez (10) reivindicaciones y no se haya pagado la tasa complementaria, sólo se estudiarán las cubiertas por la tasa pagada. Por lo tanto, se estudiaran las reivindicaciones 1 a 9.

Título de la solicitud: “Sistema portátil de burbujeo hidráulico de alta frecuencia para la terapia respiratoria” (Fl. 1).

Superintendencia de Industria y Comercio: Cra 13 No. 27-00 pisos 1, 3, 4, 5, 6, 7 y 10 - PBX: (571) 5870000
E-mail: contactenos@sic.gov.co - Bogotá D.C., Colombia.
Señor ciudadano la entidad le ofrece los siguientes canales para hacer seguimiento a su solicitud así:
Página web: www.sic.gov.co
Centro de atención telefónica en Bogotá: 5920400
Línea gratuita a nivel nacional: 018000 910165
Kiosco Informático Centro Comercial Gran Estación en Bogotá
MINCOMERCIO INDUSTRIA Y TURISMO

El problema planteado en esta solicitud, consiste en lograr un sistema para terapia respiratoria donde se pueda realizar la inspiración forzada bucal sin necesidad de expulsar el dispositivo de la boca durante la terapia, además de manejar diferentes niveles de presión.

Para resolver este problema técnico, la solicitud en estudio propone un sistema portátil para terapia respiratoria que comprende una tapa y un cuerpo, donde dicha tapa consta de una boquilla de expiración y una segunda boquilla que aloja una válvula inspiratoria.

El objeto de la presente solicitud se relaciona con la Clasificación Internacional de Patentes (CIP): A 61 M 11/00.

3. De la solicitud de patente

Reivindicaciones (Art 30 D 486, Art 22 PCT)

El capítulo reivindicatorio no es claro porque:

1. Las expresiones: *"…en la que el paciente apoya sus labios para realizarlos movimientos forzados de la respiración…", "…contenedor de líquido…", "…donde el sistema funciona con la generación de burbujas en un fluido de trabajo (8) que debe ser vertido dentro del cuerpo reciente (23)…", "…para evitar reflujo y riesgo de broncoaspiración para inspirar o espirar sin desconectarse."* (reivindicación 1), *"… que se desbloquea en el proceso de inspiración…", "…y tiene la función de incentivar la inspiración forzada (…) estando la válvula de inspiración bloqueada."* (reivindicación 2), *"…que se bloquea en el proceso de inspiración…", "…y tiene la función de detener la succión (…) para preparar la siguiente expiración."* (reivindicación 3), *"…y contiene los conductos que permiten el flujo (…) al recipiente…", "…que permiten la salida del aire resultante después del burbujeo (…) tubo de espiración (3)."* (reivindicación 4), *"…para fugas de fluido (8) salpicado por le burbujeo en la unión con el anillo (4)…", "…que encajan realizando un ángulo de giro dentro del anillo de unión (4)."* (reivindicación 5), *"…para fugas de fluido (8) en la unión con el anillo de unión (4)…", "…que obstruye el paso del fluido de tranajo devolviéndolo en forma de gotas al recipiente (23)…", "…para la salida del aire después del burbujeo hacia los agujeros de la tapa (19) por los cuales se expulsa el aire al ambiente."* (reivindicación 6), *"…que ejercen la presión de cierre de las válvulas…", "…para mantener ensambladas las válvulas…"* (reivindicación 8), *"…de apoyo para superficies horizontales…", "…que encajan realizando un ángulo de giro dentro del anillo de unión en sentido contrario al del recipiente (23)."* (reivindicación 9); describen funciones, efectos, ventajas o resultados a alcanzar, los cuales no son aspectos susceptibles de patente. Para mayor claridad, el producto reclamado se debe definir técnicamente mediante sus características estructurales. Se sugiere al solicitante eliminar la reivindicación y las expresiones citadas.

2. La expresión*: "…una válvula espiratoria (5) con su sello (7) y una válvula inspiratoria (6) con su sello (7)…"* (reivindicación 1) no es clara, toda vez que en los

Superintendencia de Industria y Comercio: Cra 13 No. 27-00 pisos 1, 3, 4, 5, 6, 7 y 10 - PBX: (571) 5870000
E-mail: contactenos@sic.gov.co - Bogotá D.C., Colombia.
Señor ciudadano la entidad le ofrece los siguientes canales para hacer seguimiento a su solicitud así:
Página web: www.sic.gov.co
Línea gratuita a nivel nacional: 018000 910165
Centro de atención telefónica en Bogotá: 5920400
Kiosco Informático Centro Comercial Gran Estación en Bogotá
MINCOMERCIO INDUSTRIA Y TURISMO

dibujos no se ve la interacción directa entre los sellos (7) y las válvulas mencionadas. De acuerdo con lo anterior, podría considerarse que lo reclamado en las reivindicaciones no es coherente con lo presentado en los dibujos. Se sugiere realizar las aclaraciones o correcciones correspondientes.

3. Se presenta un error de transcripción en la reivindicación 2, al utilizar el término “inncentivar", se sugiere al solicitante realizar las correcciones correspondientes.

4. Las reivindicaciones 2 y 3 mencionan los componentes de las válvulas de inspiración y espiración, mas no muestra la interacción estructural que existe entre las mismas. Se sugiere al solicitante describir dicha interacción en las reivindicaciones citadas. Es decir, por ejemplo, describir con más detalle cómo y dónde están ensamblados dichos componentes en las válvulas.

5. El número de referencia (28) no se encuentra en los dibujos, por lo tanto no se puede identificar la barrera de salpicadura (28) mencionada en la reivindicación 6.

4. Determinación del Estado de la Técnica

El estado de la técnica se determinó con base en la fecha de presentación de la solicitud de patente nacional: Octubre 25 de 2013, y se encontraron los siguientes documentos que anticipan el objeto de esta solicitud:

Ítem	Documento	Título	Fecha de Publicación
D1	US 2013/0056888	‘Nebulizer’	07/Marzo/2013
D2	US 5’660.167	‘Dual nozzle nebulizer’	26/Agosto/1997

El documento D1[1] divulga un nebulizador que comprende un contenedor insertable y un dispositivo contador para contador las operaciones del nebulizador y es abierto para reemplazar el contenedor (resumen).

El documento D2[2] divulga un dispositivo para incorporar un líquido en un gas portador que comprende un cuerpo cilíndrico hueco que tiene una cámara de entrada separada del interior del cuerpo por una partición. Una primera boquilla y una segunda boquilla están soportadas en la partición e interconectadas por la cámara de entrada y el cuerpo interior (resumen).

5. **Examen de Patentabilidad** (Art 14 D486)

Nivel inventivo (Art18 D486)

La reivindicación 1 consiste en: “*Sistema Portátil de Burbujeo Hidráulico de Alta Frecuencia para la Terapia Respiratoria caracterizado porque por una tapa (2)…”* (Ver página 21 del radicado Nº 13-253344-00000-0000).

1 https://docs.google.com/viewer?url=patentimages.storage.googleapis.com/pdfs/US20130056888.pdf

2 https://www.google.ca/patents/US5660167?dq=5660167&hl=es&sa=X&ei=msxsVbrANq21sASM8IDwDQ&ved=0CB0Q6AEwAA

Superintendencia de Industria y Comercio: Cra 13 No. 27-00 pisos 1, 3, 4, 5, 6, 7 y 10 - PBX: (571) 5870000
E-mail: contactenos@sic.gov.co - Bogotá D.C., Colombia.
Señor ciudadano la entidad le ofrece los siguientes canales para hacer seguimiento a su solicitud así:
Página web: www.sic.gov.co
Línea gratuita a nivel nacional: 018000 910165
Centro de atención telefónica en Bogotá: 5920400
Kiosco Informático Centro Comercial Gran Estación en Bogotá
MINCOMERCIO INDUSTRIA Y TURISMO

Comparación de las características técnicas esenciales, con las del estado de la técnica:

Características esenciales	D1	D2
Sistema portátil para terapia respiratoria caracterizado por:	Nebulizador caracterizado por:	Nebulizador de doble boquilla caracterizado por:
Tapa que tiene una primera boquilla de espiración.	Una parte superior (13) que comprende una boquilla (12) (Párr. [0047])	Cuerpo cilíndrico (30) comprenden los tubos (140) y (130). El tubo (140) comprende una partición (13), una primera boquilla (66) y una segunda boquilla (64) (Figs. 1 a 4; Col. 3, líneas 12 a 27).
Una segunda boquilla que aloja una válvula inspiratoria.	No menciona.	
Un cuerpo de recipiente contenedor de líquido.	Un contenedor (18) (Fig. 3; Párr. [0047])	Un reservorio (15) (Fig. 2; Col. 3, líneas 56 y 57)
Un anillo de unión entre el cuerpo de recipiente y la taba.	Un miembro de seguridad (30) entre la parte superior (13) y la carcasa (18) (Fig. 3)	No menciona.
Un tubo de espiración central	Tubo de transporte (9) que atraviesa el centro del anillo de unión (Fig. 3; Párr. [0047])	Un tubo central (80) (Fig. 1; Col. 3, líneas 62 a 67)
El tubo atraviesa el centro del anillo de unión.		No menciona.
Una válvula espiratoria.	Una válvula no retorno (Fig. 3; Párr. [0047]).	

Los documentos D1 y D2 se consideran el estado de la técnica cercano a la invención definida en la reivindicación 1 porque divulgan nebulizadores.

La diferencia entre la invención, definida en la reivindicación 1 y el nebulizador de D1 consiste en una segunda boquilla que aloja una válvula inspiratoria.

La diferencia entre la invención, definida en la reivindicación 1 y el nebulizador de D2 consiste en el anillo de unión y la válvula espiratoria.

El efecto que logra el incluir una segunda boquilla que aloja una válvula inspiratoria es que evita que el usuario tenga que retirar el aparato durante la terapia.

Por lo tanto, el problema técnico objetivo que pretende resolver esta invención se puede formular así: “cómo modificar el nebulizador conocido en D1 para evitar que el usuario tenga que retirar el aparato durante la terapia”.

Sin embargo, una segunda boquilla que aloja una válvula inspiratoria para evitar que el usuario tenga que retirar el aparato durante la terapia, ya está divulgada en el documento D2 que se refiere a un cuerpo cilíndrico (30) comprenden los tubos (140) y (130). El tubo (140) comprende una partición (13), una primera boquilla (66) y una segunda boquilla (64) (Figs. 1 a 4; Col. 3, líneas 12 a 27).

En consecuencia, la persona del oficio normalmente versada en la materia, incluiría un cuerpo cilíndrico (30) comprenden los tubos (140) y (130). El tubo (140) comprende una partición (13), una primera boquilla (66) y una segunda boquilla (64) del documento D2 en el nebulizador divulgado en el documento D1 para llegar así al objeto de la reivindicación 1 de la solicitud. Por lo cual se considera obvia.

Superintendencia de Industria y Comercio: Cra 13 No. 27-00 pisos 1, 3, 4, 5, 6, 7 y 10 - PBX: (571) 5870000
E-mail: contactenos@sic.gov.co - Bogotá D.C., Colombia.
Señor ciudadano la entidad le ofrece los siguientes canales para hacer seguimiento a su solicitud así:
Página web: www.sic.gov.co
Línea gratuita a nivel nacional: 018000 910165
Centro de atención telefónica en Bogotá: 5920400
Kiosco Informático Centro Comercial Gran Estación en Bogotá
MINCOMERCIO INDUSTRIA Y TURISMO

6. Conclusión

Los requisitos de Patentabilidad de la presente solicitud están afectados así:

Ítem	Documento	Reivindicaciones afectadas	Requisito que afecta
D1	US 2013/0056888	1	Novedad/Nivel Inventivo
D2	US 5'660.167	1	Novedad/Nivel Inventivo

Superintendencia de Industria y Comercio: Cra 13 No. 27-00 pisos 1, 3, 4, 5, 6, 7 y 10 - PBX: (571) 5870000
E-mail: contactenos@sic.gov.co - Bogotá D.C., Colombia.
Señor ciudadano la entidad le ofrece los siguientes canales para hacer seguimiento a su solicitud así:
Página web: www.sic.gov.co
Centro de atención telefónica en Bogotá: 5920400
Línea gratuita a nivel nacional: 018000 910165
Kiosco Informático Centro Comercial Gran Estación en Bogotá
MINCOMERCIO INDUSTRIA Y TURISMO

En cumplimiento del artículo 45 de la Decisión 486 de la Comisión de la Comunidad Andina, se le indica que debe dar respuesta dentro del término de sesenta (60) días contados a partir del día siguiente de la fecha de notificación de la presente comunicación. En caso de no dar respuesta al presente requerimiento, o si a pesar de la respuesta subsistieran los impedimentos para la concesión, se denegará la patente.

Se invita al solicitante se sirva indicar, si así lo considera, su renuncia al término faltante de sesenta (60) días para dar respuesta a este requerimiento y presentarla por escrito.

Finalmente, se le recuerda al solicitante que si como respuesta a este requerimiento llegara a modificar el capítulo reivindicatorio y éste contenga más de diez (10) reivindicaciones, no pagará la tasa de modificación voluntaria pero sí la correspondiente al pago por reivindicación adicional.

Notifíquese el presente oficio conforme a lo dispuesto en el numeral 5.2, literal e), del capítulo quinto del título primero de la Circular Única No. 10 de 2001.

JOSÉ LUIS SALAZAR LÓPEZ
Director de Nuevas Creaciones (c)

El anterior requerimiento fue notificado por fijación en lista, de fecha 2015-06-23

Elaboró: Monica Andrea Gutierrez Almonacid
Revisó: Sonia Andrea Diaz Pirazan

Superintendencia de Industria y Comercio: Cra 13 No. 27- 00 pisos 1, 3, 4, 5, 6, 7 y 10 - PBX: (571) 5870000
E-mail: contactenos@sic.gov.co - Bogotá D.C., Colombia.
Señor ciudadano la entidad le ofrece los siguientes canales para hacer seguimiento a su solicitud así:
Página web: www.sic.gov.co
Centro de atención telefónica en Bogotá: 5920400
Línea gratuita a nivel nacional: 018000 910165
Kiosco Informático Centro Comercial Gran Estación en Bogotá
MINCOMERCIO INDUSTRIA Y TURISMO

US 20130056888A1

(19) United States

(12) Patent Application Publication

HOLAKOVSKY et al.

(10) Pub. No.: US 2013/0056888 A1

(43) Pub. Date: Mar. 7, 2013

(54) NEBULIZER

(75) Inventors: **Holger HOLAKOVSKY**, Ingelheim am Rhein (DE); **Florian WITTE**, Ingelheim am Rhein (DE); **Frank HERRMANN**, Ingelheim am Rhein (DE); **Charles William SEARS**, Boxford, MA (US); **Christopher Michael CATINELLA**, Marlboro, MA (US); **Mario Alberto GONZALEZ**, Somerville, MA (US); **Sean Landis PHILIPS**, S. Lancaster, MA (US); **Paul BERTRAM**, Franklin, MA (US); **Marc ROHRSCHNEIDER**, Ingelheim am Rhein (DE)

(73) Assignee: **BOEHRINGER INGELHEIM INTERNATIONAL GMBH**, Ingelheim am Rhein (DE)

(21) Appl. No.: **13/477,527**

(22) Filed: **May 22, 2012**

Related U.S. Application Data

(63) Continuation of application No. PCT/US2011/037527, filed on May 23, 2011.

Publication Classification

(51) **Int. Cl.**
B01F 3/04 (2006.01)

(52) **U.S. Cl.** **261/78.2**; 261/78.1

(57) **ABSTRACT**

A nebulizer which has an insertable container and a counter device for counting operations of the nebulizer, and is opened for replacing the container. A securing device having locking portions which are forced apart is provided to prevent reconnection of an already used container. The nebulizer has an indicator for showing the current container number and/or symbols indicating the need container replacement. The indicator is driven by the force of an internal spring. The indicator member also controls a lock of the container for locking the container against further actuation. The lock is reset after container replacement.

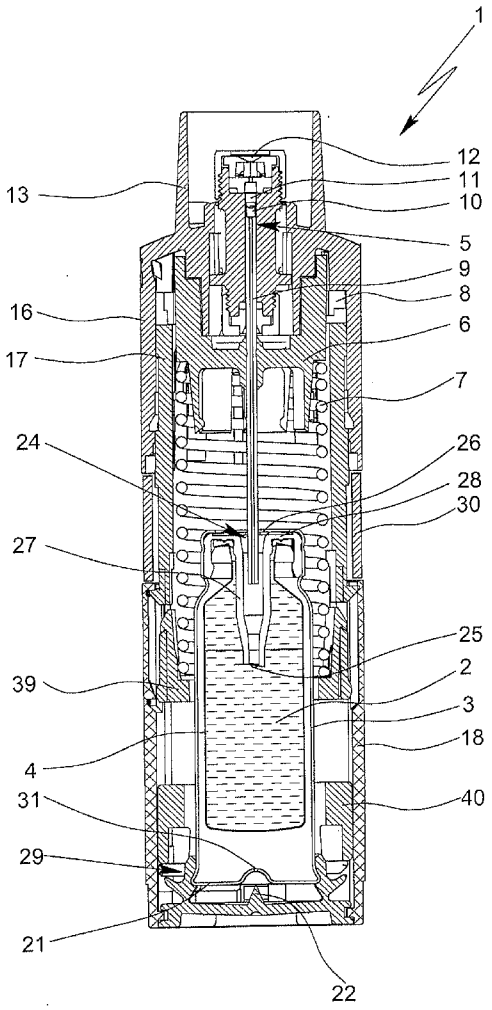

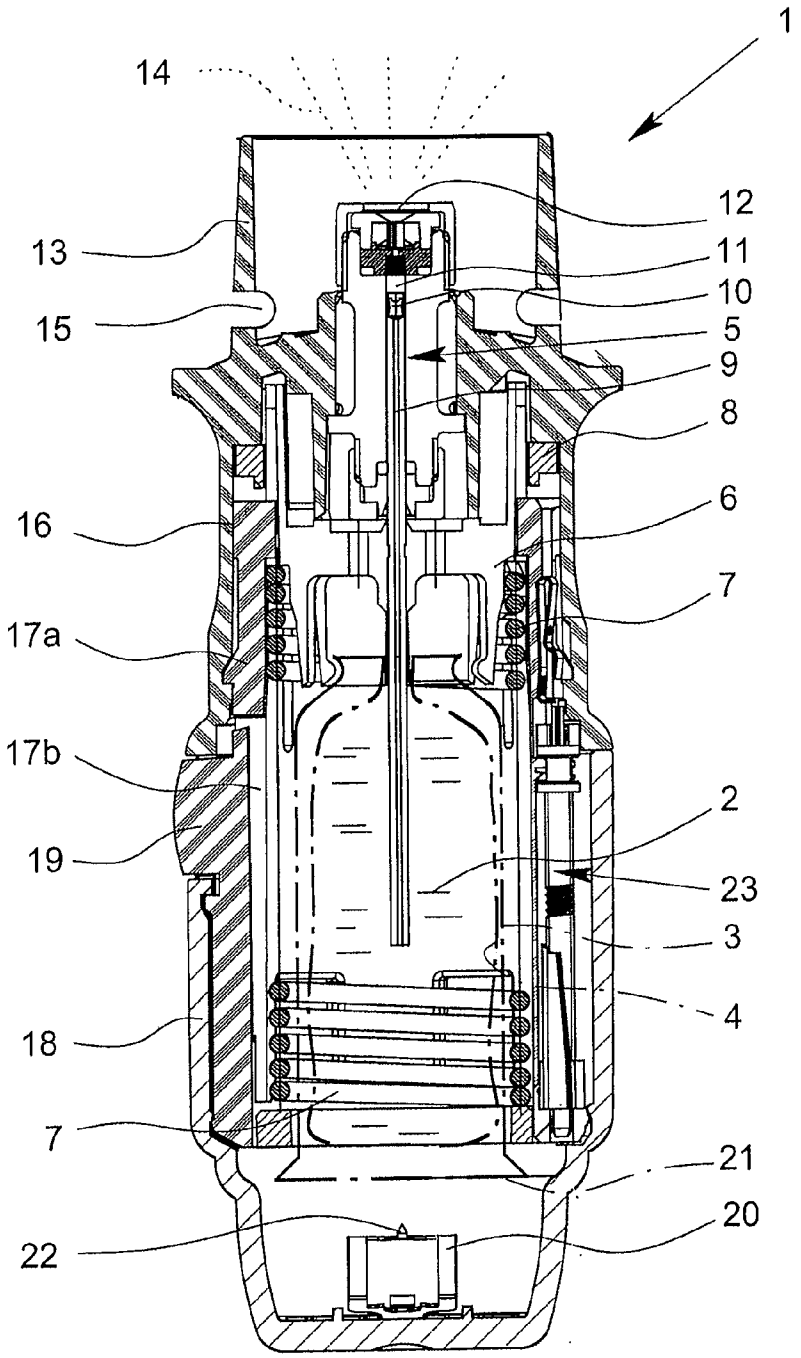

Fig. 1
(Prior Art)

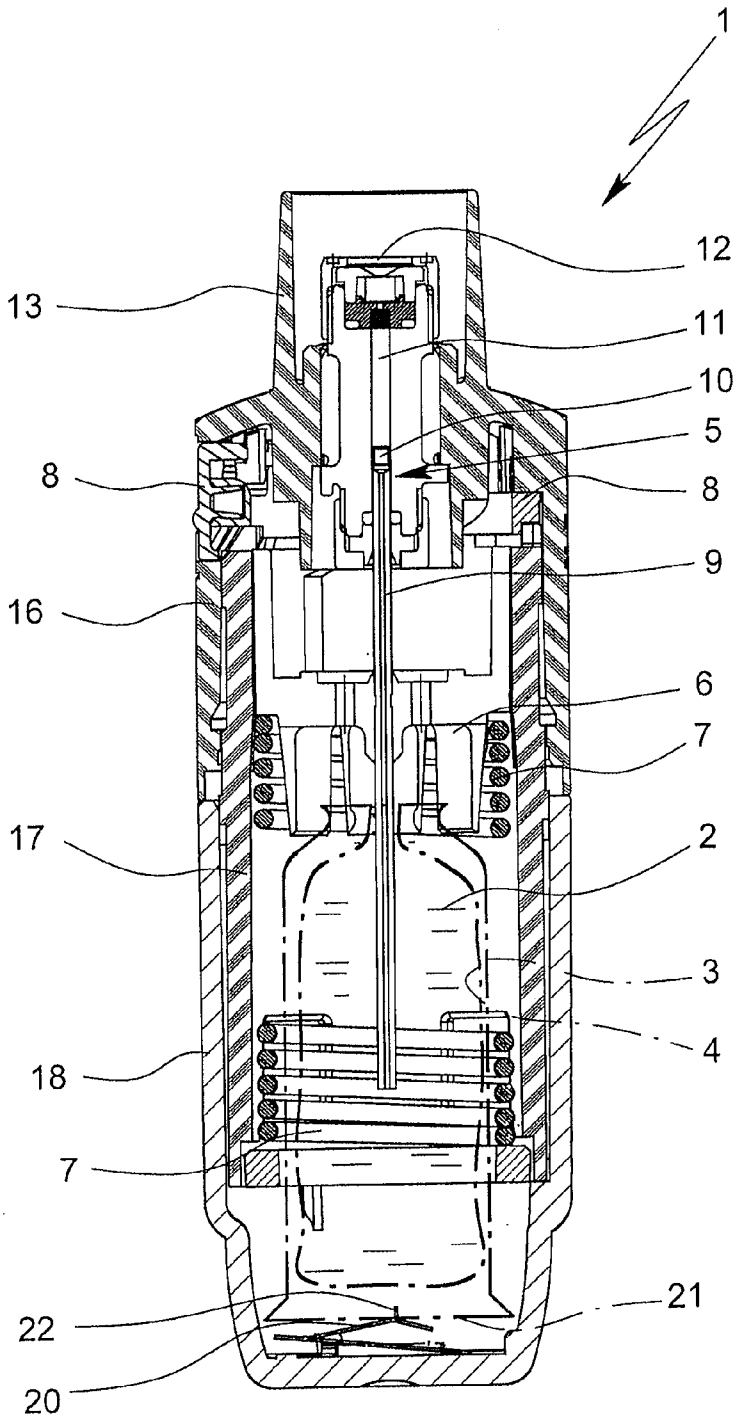

Fig. 2
(Prior Art)

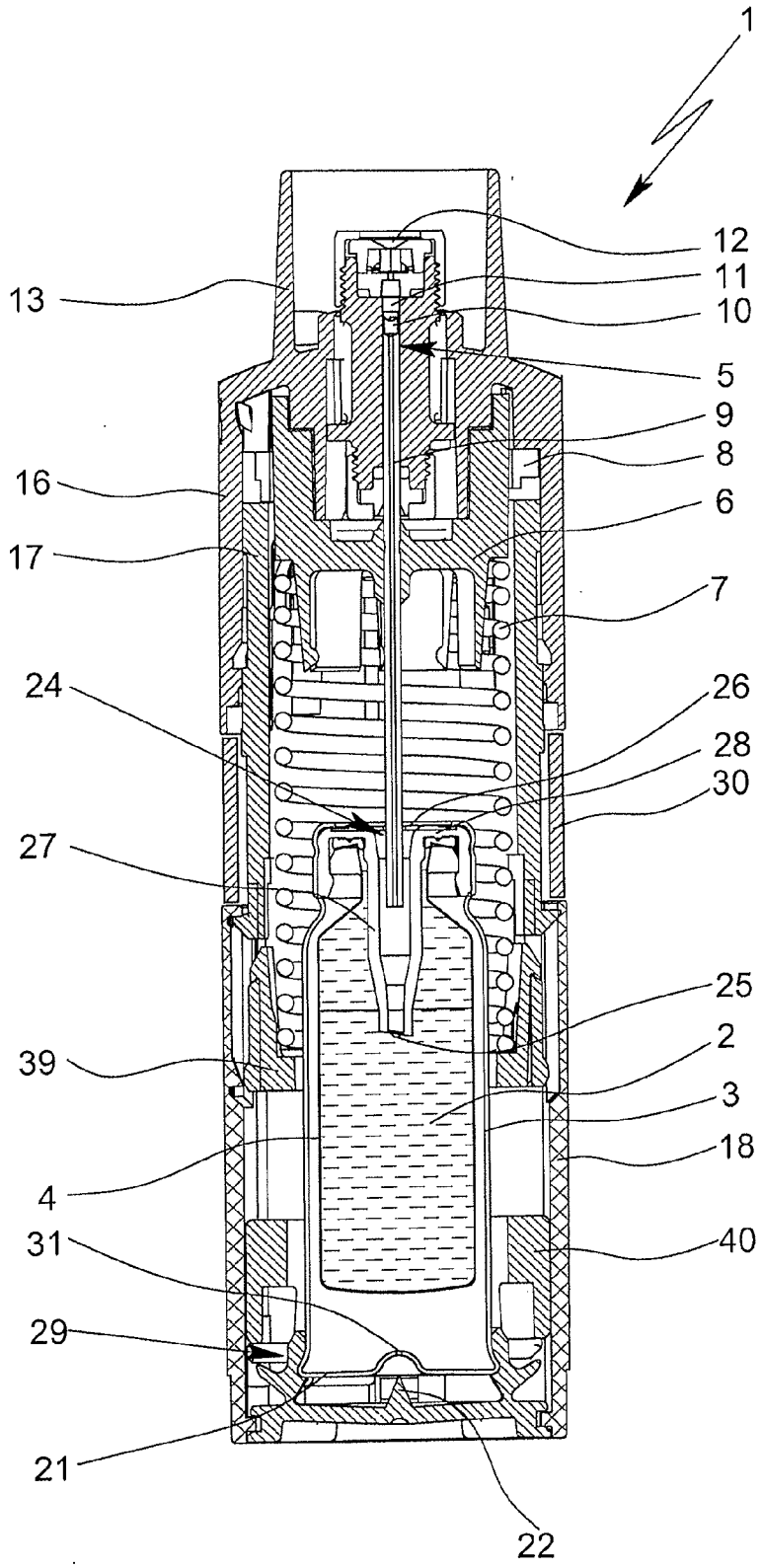

Fig. 3

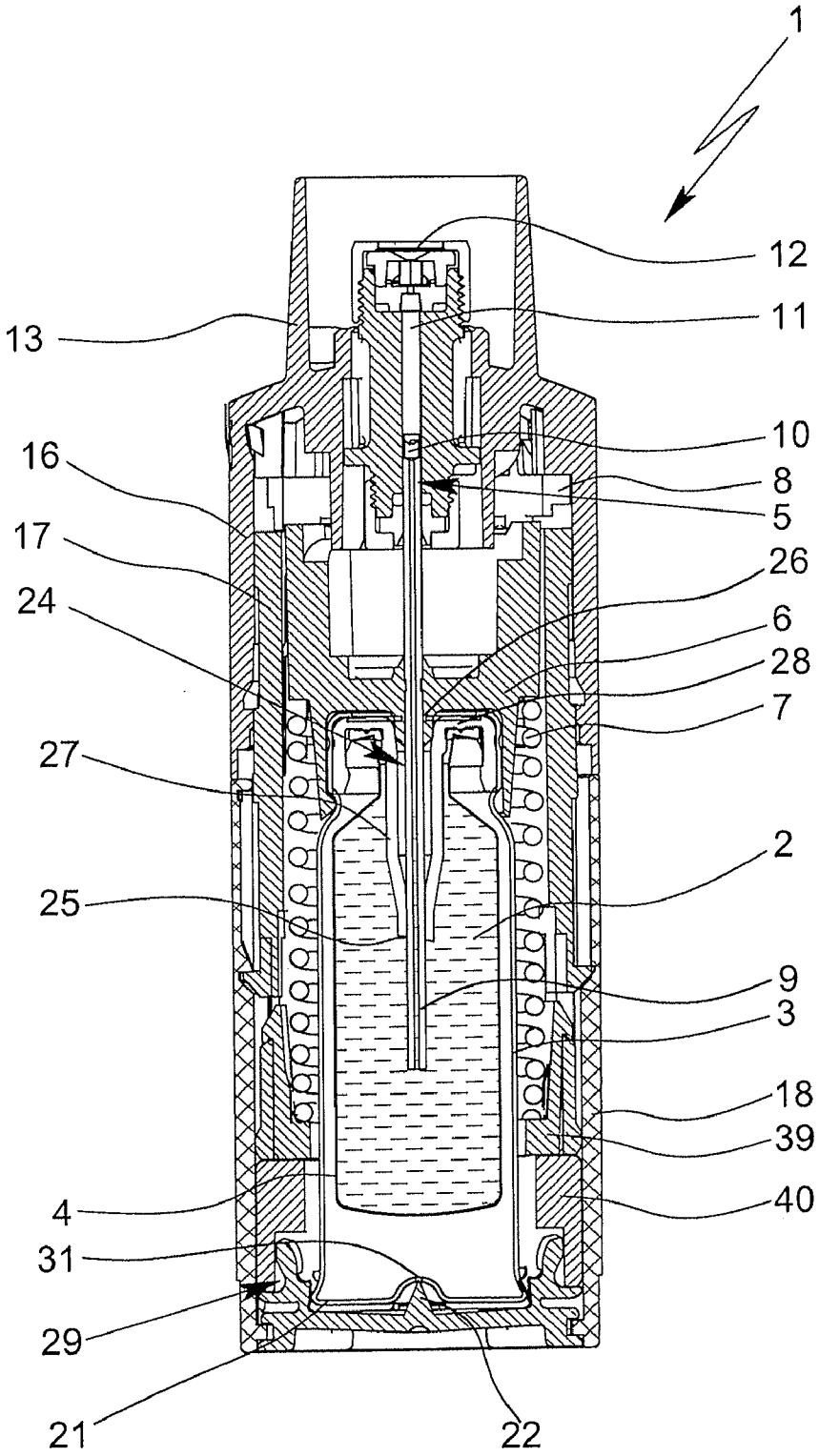

Fig. 4

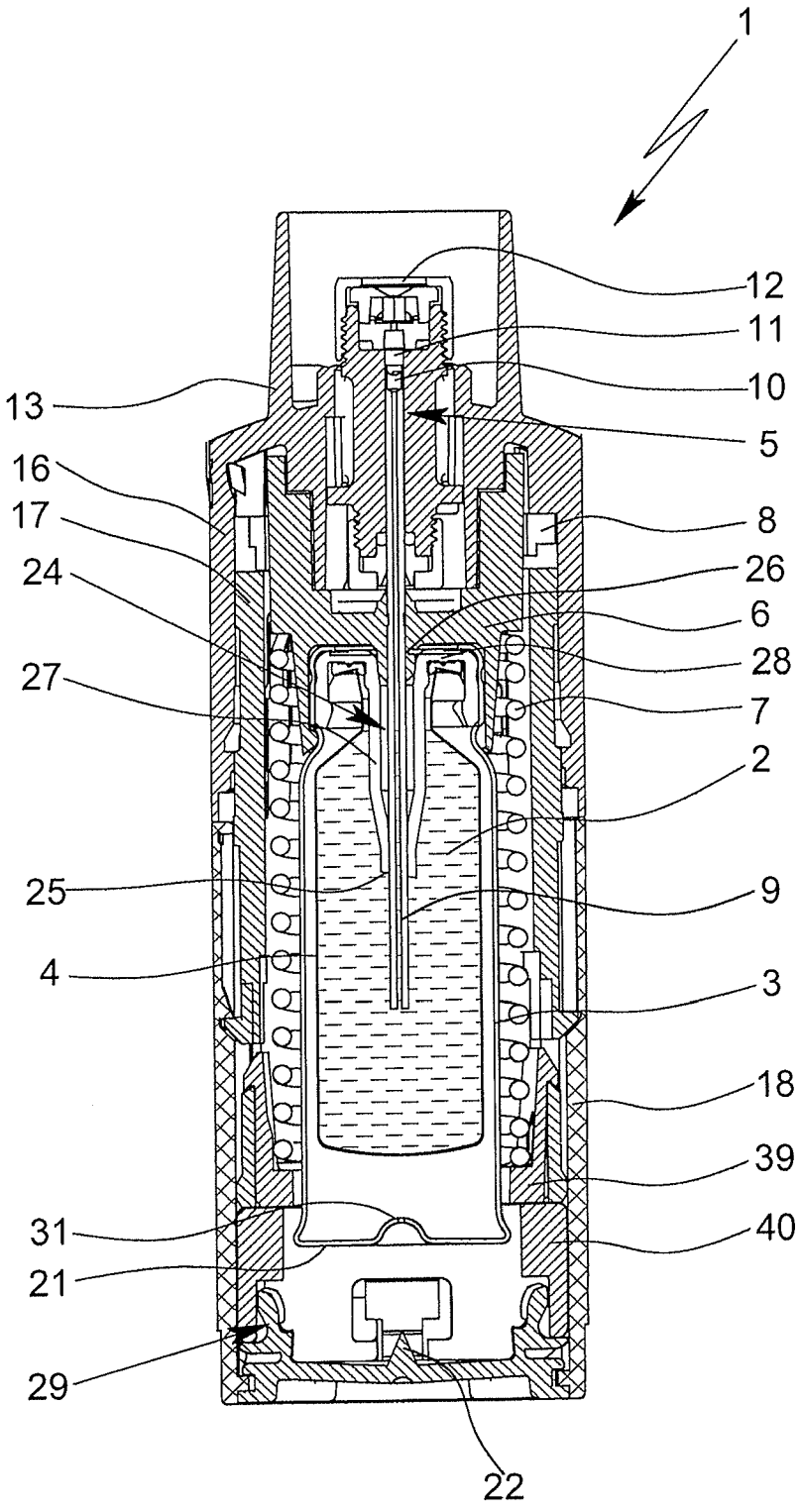

Fig. 5

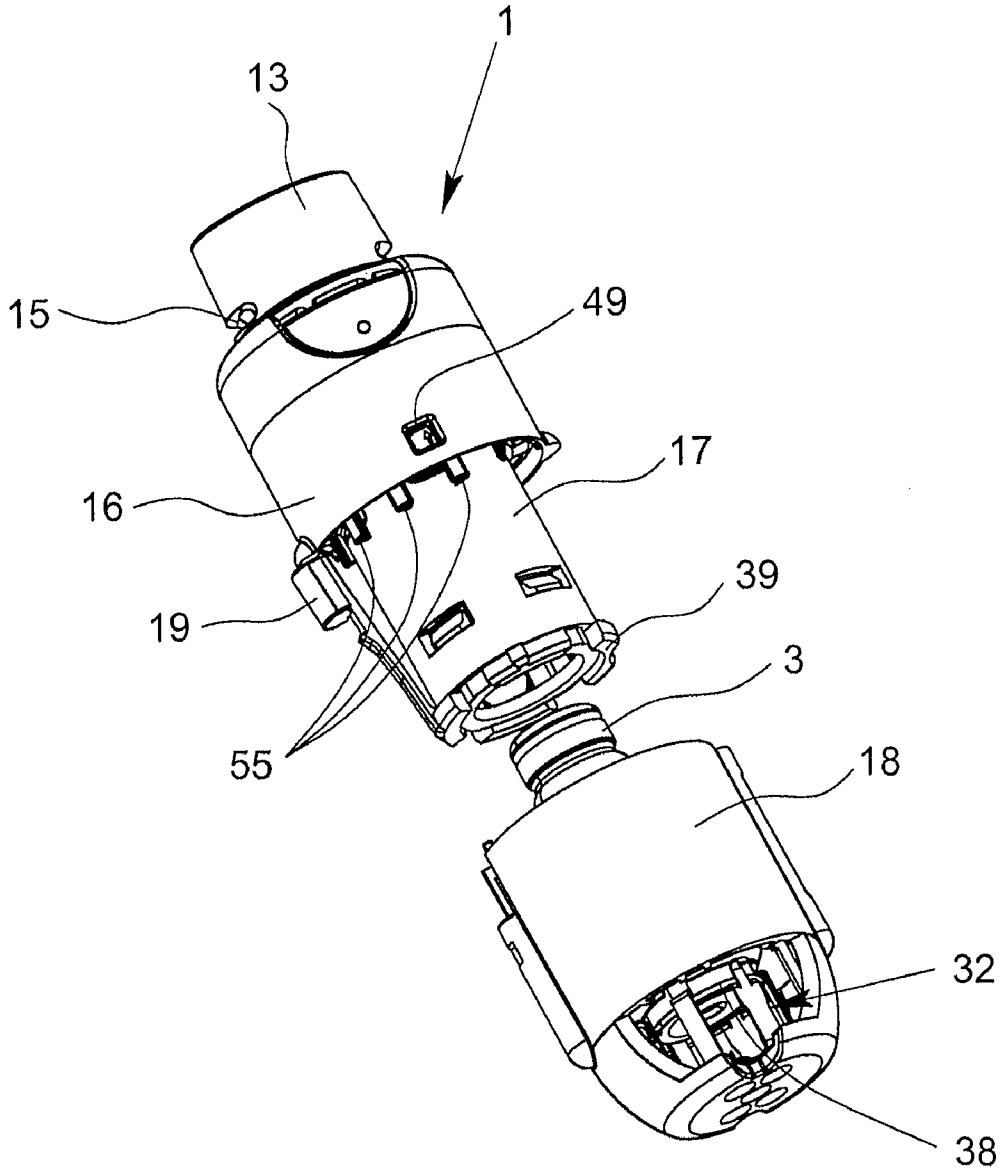

Fig. 6

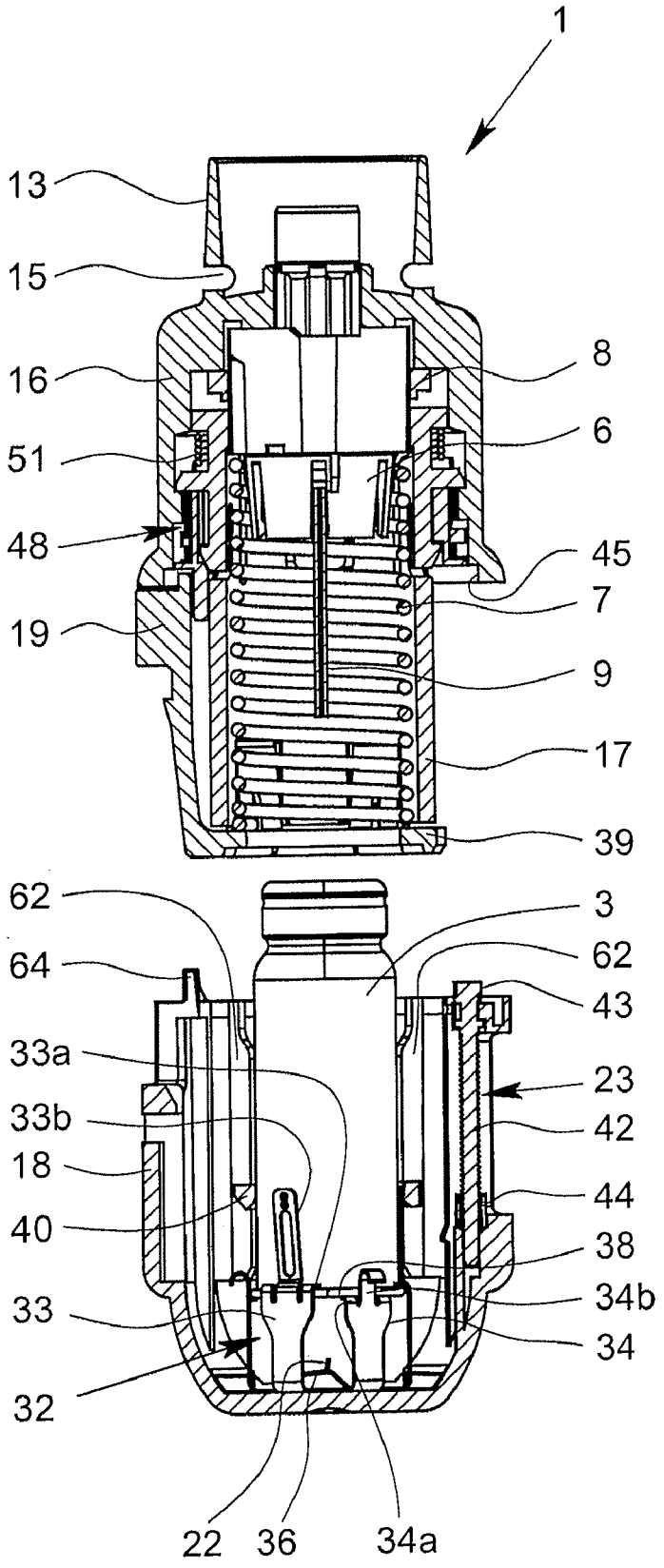
1
13
15
16
51
48
19
8
6
45
7
9
17
39
62
64
33a
33b
18
40
33
32
3
62
43
23
42
44
38
34b
34
22
36
34a

Fig. 7

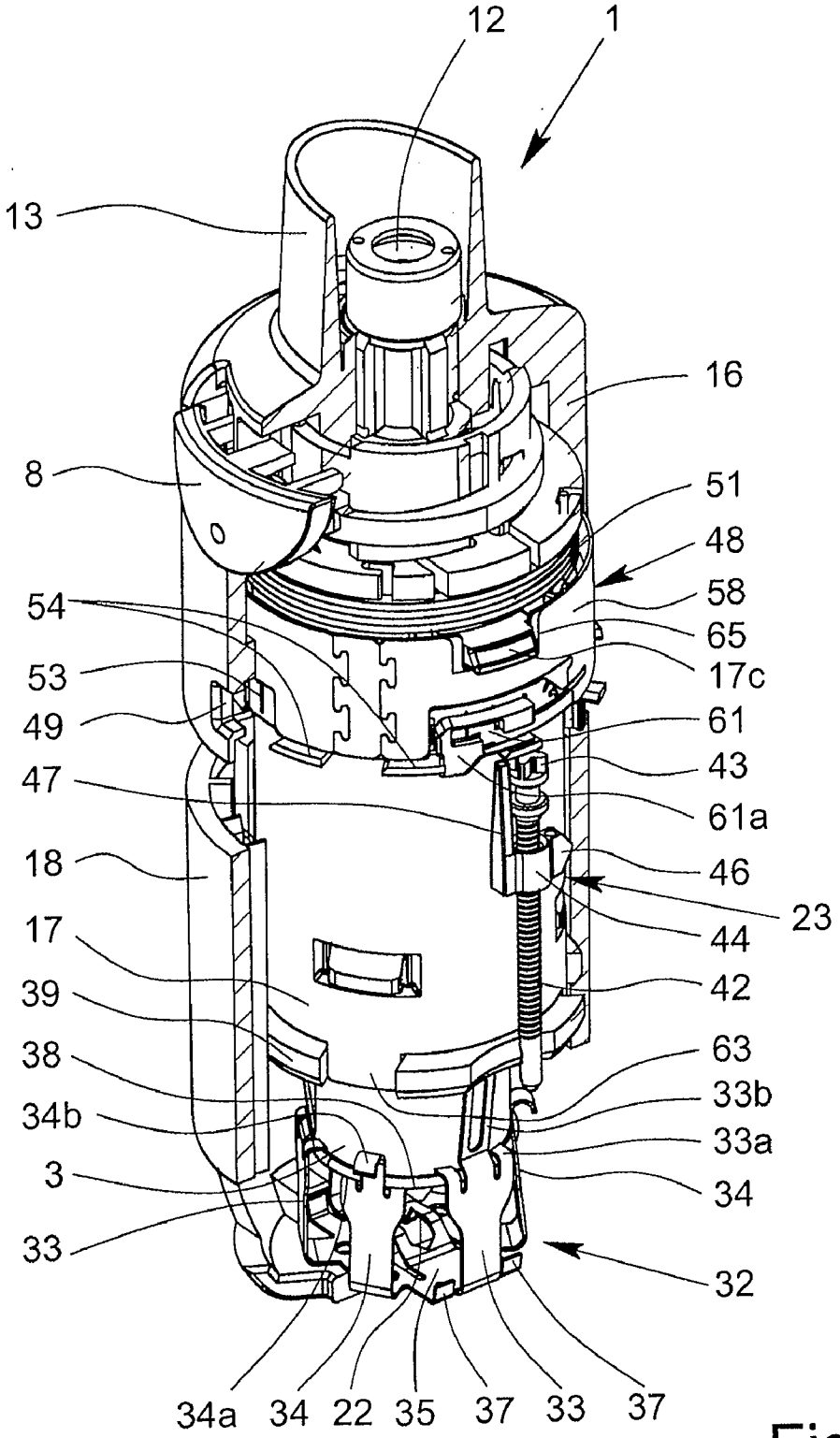
12
1
13
16
8
51
48
58
54
65
17c
53
61
49
43
47
61a
18
46
23
44
17
42
39
63
38
33b
34b
33a
3
34
33
32
34a
34
22
35
37
33
37

Fig. 8

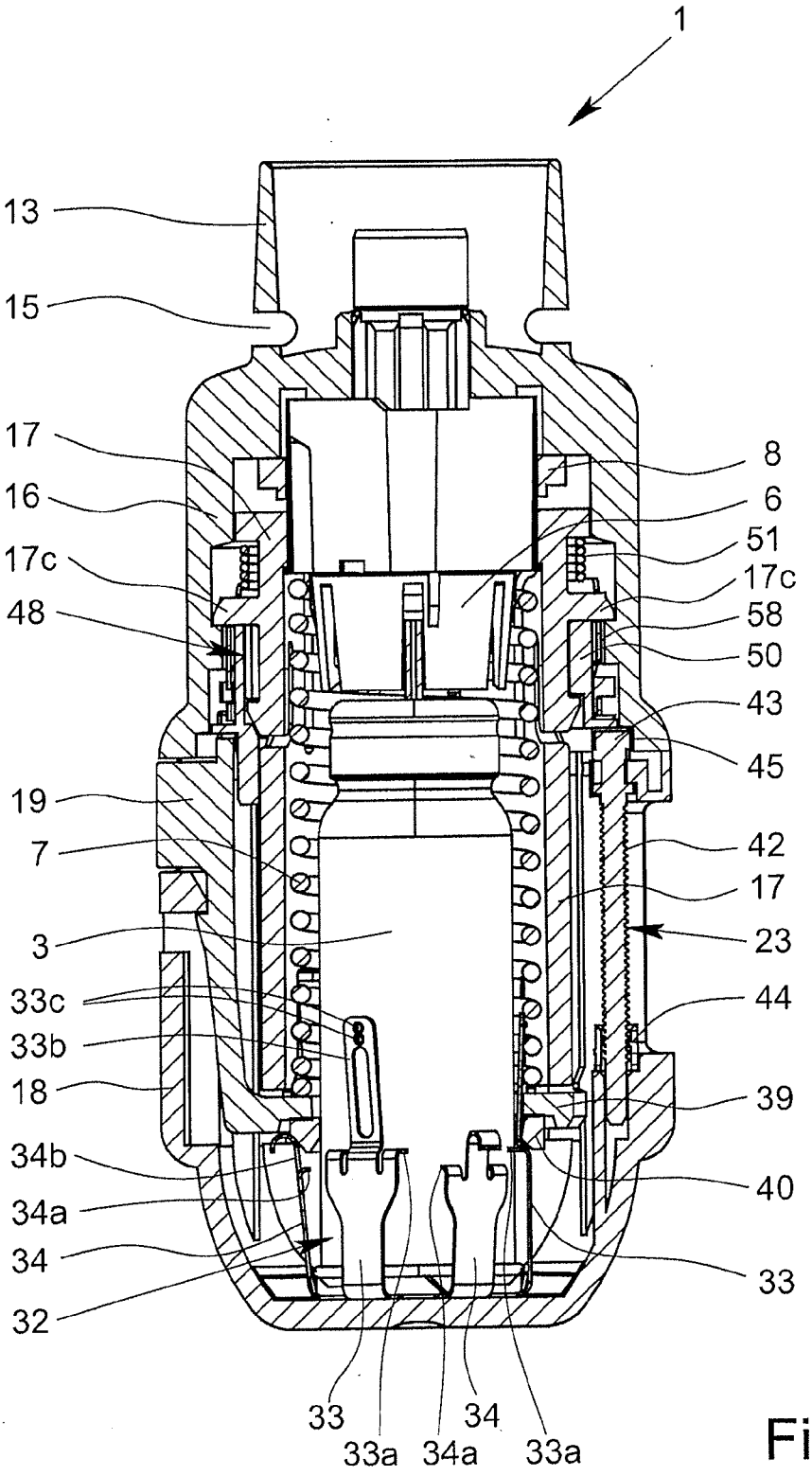
1
13
15
17
16
17c
48
19
7
3
33c
33b
18
34b
34a
34
32
8
6
51
17c
58
50
43
45
42
17
23
44
39
40
33
33
33a
34a
34
33a

Fig. 9

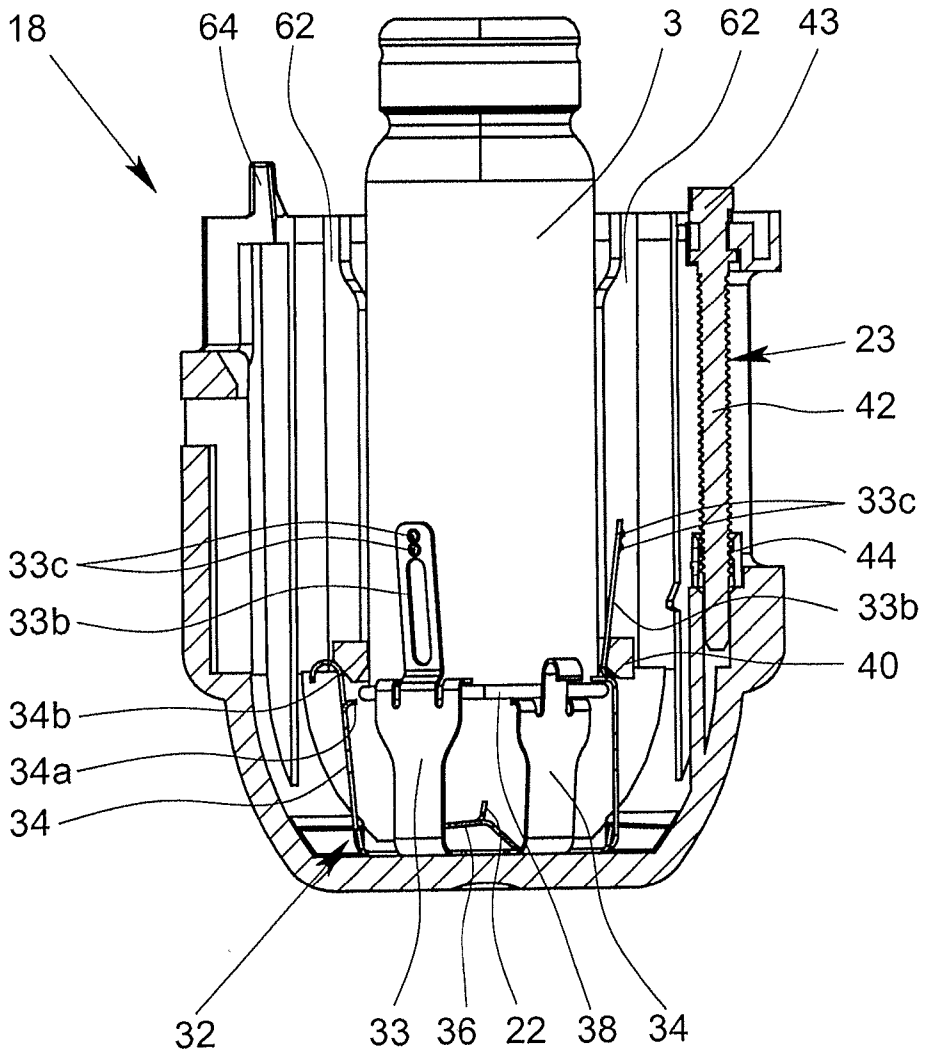
18
64
62
3
62
43
23
42
33c
44
33b
40
33c
33b
34b
34a
34
32
33
36
22
38
34

Fig. 10

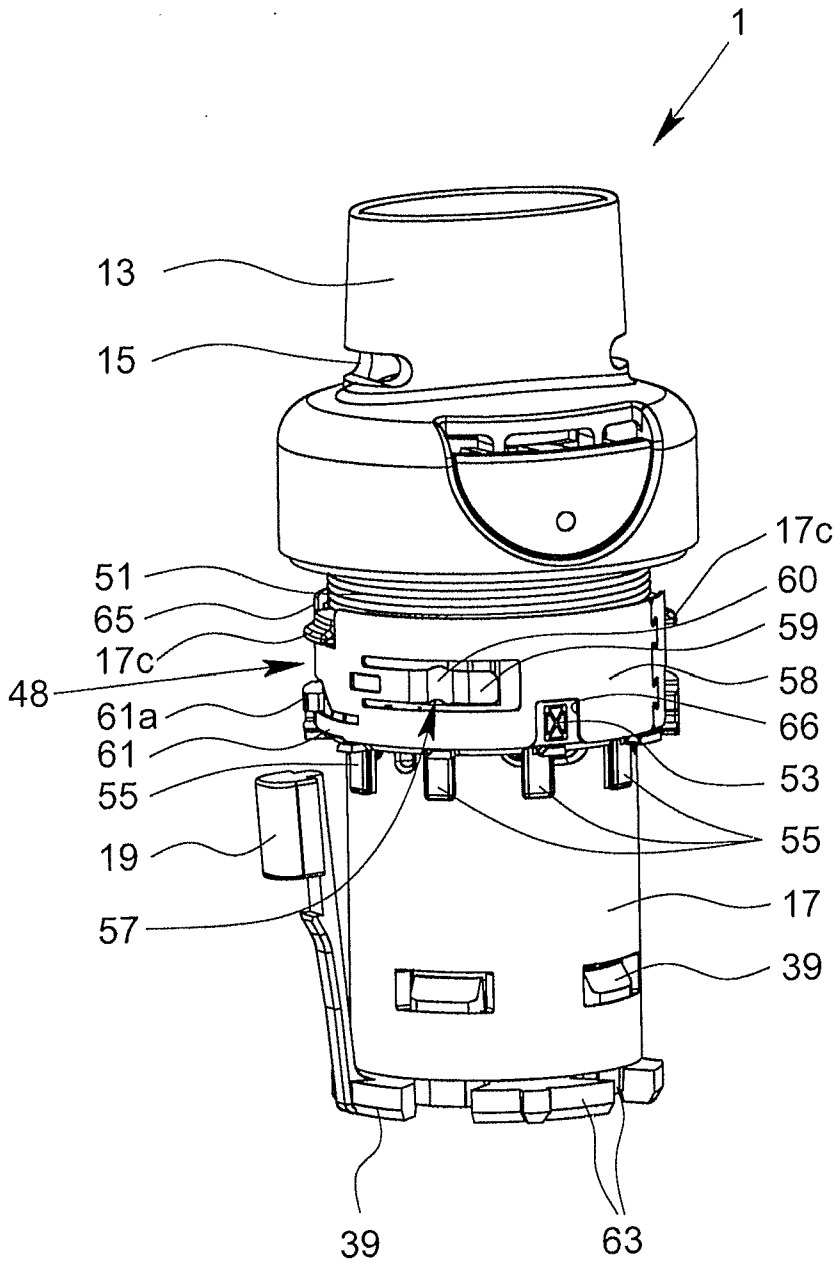

Fig. 11

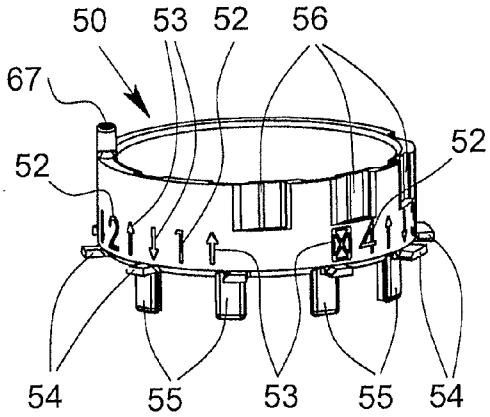

Fig. 12

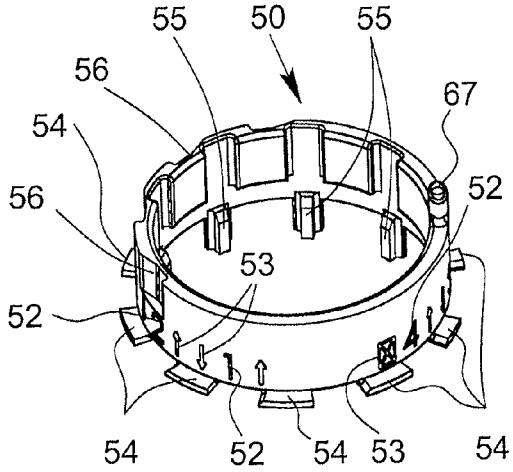

Fig. 13

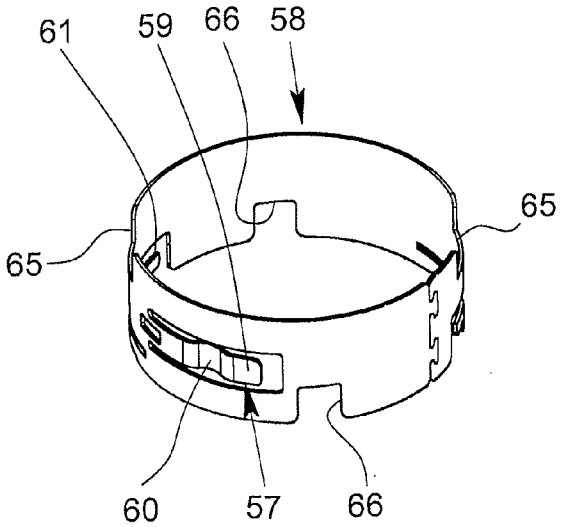

Fig. 14

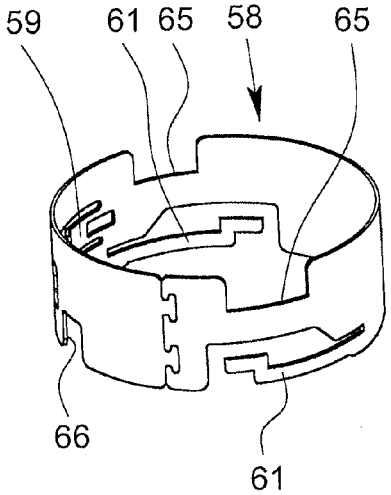

Fig. 15

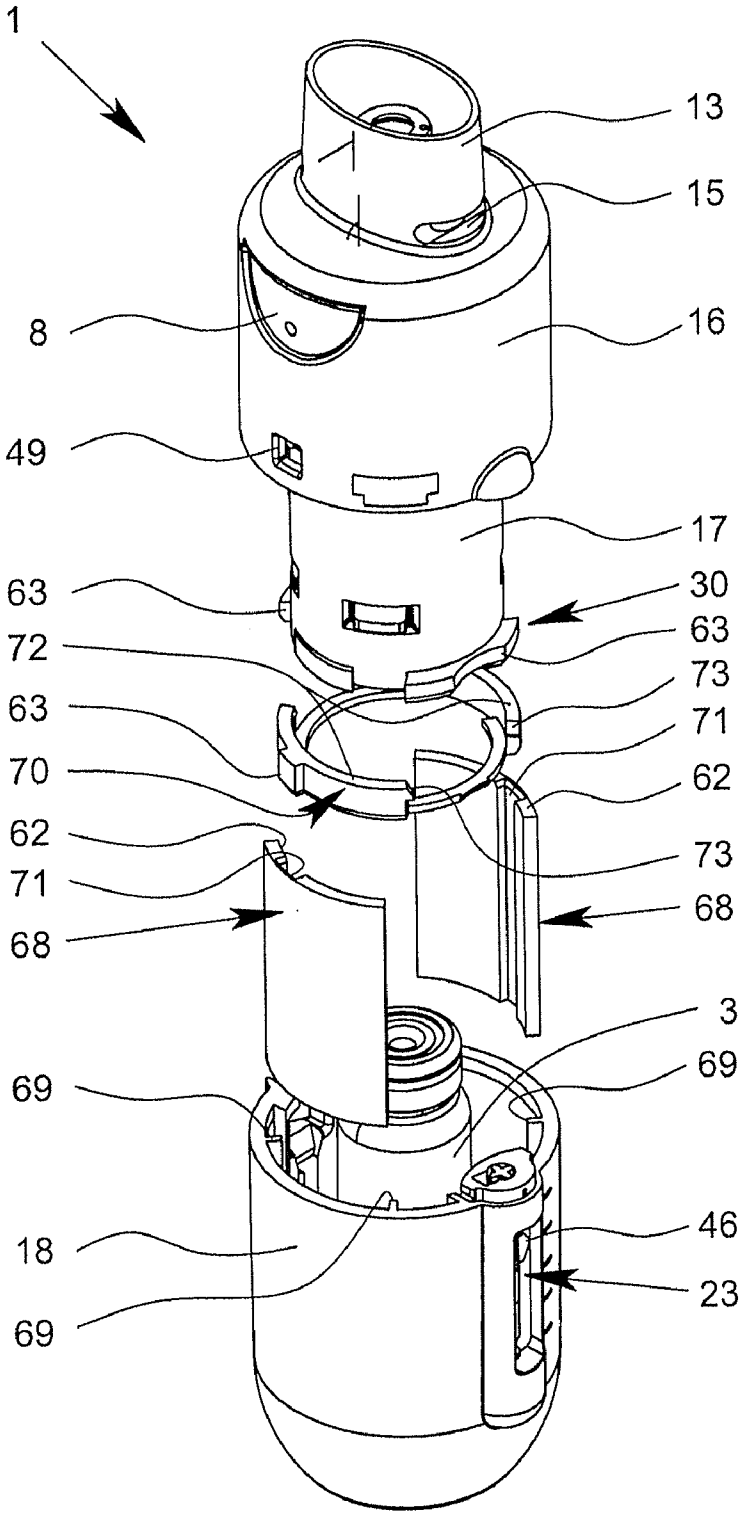
1
13
15
8
16
49
17
63
30
63
72
73
63
71
70
62
62
73
71
68
68
3
69
69
18
46
23
69

Fig. 16

NEBULIZER

CROSS REFERENCE TO RELATED APPLICATION

[0001] This application is a continuation of International Patent Application No. PCT/US2011/037527 which designates the United States.

BACKGROUND OF THE INVENTION

[0002] 1. Field of the Invention

[0003] The present invention relates to a nebulizer for nebulizing a fluid.

[0004] 2. Description of Related Art

[0005] International Patent Application Publication WO 2006/125577 A2 discloses a nebulizer which comprises, as a reservoir for fluid which is to be atomized or nebulized, an insertable rigid container having an inner bag containing the fluid and a pressure generator with a drive spring for delivering and atomizing the fluid. The container is pre-installed in nebulizer in a delivery state. The pre-installed container is held by a transportation lock unmovable within the housing in the delivery state in order to avoid any undesired opening of the container. Before being used for the first time a lower housing part of the nebulizer is completely closed. Thus, the pre-installed container is opened by a delivery tube piercing a sealing and a septum to fluidically connect to the inner bag of the container. Further, the transportation lock is opened so that the container can move inside the nebulizer back and forth.

[0006] By rotating the lower housing part the drive spring can be put under tension and fluid can be sucked into a compression chamber of the pressure generator. Simultaneously, the container is moved into the lower housing part in a stroke movement within the nebulizer and when tensioned for the first time the container may be pierced through its base by a piercing element in the lower housing part to allow venting of the container. After manual operation of a blocking element the drive spring is released and moves the delivery tube into the pressure chamber so that the fluid is put under pressure by the drive spring and is delivered or atomized through a nozzle into a mouthpiece as an aerosol, without the use of propellant gas.

[0007] International Patent Application Publication WO 2007/022898 A2 disclose a similar nebulizer. A container can be inserted into a housing of the nebulizer. The housing is closed by a lower housing part. The container is moving axially forth and back during conveying of the fluid to be nebulized, and during pressure generation and nebulization. A counter device can be arranged in the lower housing part. The counter device locks the nebulizer against further use if a predetermined number of operations has been reached or exceeded. Then, the housing part may be replaced together with the counter device and the container. The container may be connected inseparably with the housing part. Further, the nebulizer comprises a device for permanently locking the nebulizer when a certain number of containers have been used or when a certain number of operations have been reached. Coding can be provided so that only the right or permitted housing part can be coupled to the upper part of the nebulizer. A first coding element is arranged at the upper part and a complementary coding element, in particular an axial groove, is provided in the housing part.

SUMMARY OF THE INVENTION

[0008] A primary object of the present invention is to provide a nebulizer allowing easy and/or improved handling and to provide an improved or universal coding.

[0009] The above object is achieved by a nebulizer as described herein.

[0010] A first aspect of the present invention is that the nebulizer comprises an indicator member showing the number of containers that have been used or can still be used, and showing in addition symbols indicating container replacement. The numbers and symbols are shown alternately by the indicator. This allows easy or improved handling or use of the nebulizer.

[0011] According to another aspect of the present invention, the nebulizer comprises an indicator member showing the number of containers that have been used or still can be used and/or the number of operations that have been performed or still can be performed with this nebulizer, wherein the indicator member is moved or rotated stepwise, i.e., indexed, or more generally driven, by the force of a spring. This allows easy and/or improved handling or use of the nebulizer. In particular, any additional manual force to drive the indicator member or to use the nebulizer can be avoided. Instead, the spring is used preferably as an energy store to drive the indicator member and/or a lock of the nebulizer.

[0012] According to a further aspect of the present invention, the indicator member drives or controls a lock of the nebulizer such that the nebulizer is locked against further use in a first locked state when the container is replaced, wherein the first locked state is reset by indexing the indicator member and/or resetting the lock when the container has been replaced. This allows easy and/or improved handling or construction of the nebulizer as the indicator member controls the lock.

[0013] In general, the indicator member is preferably ring-like. This allows a very simple and/or compact construction.

[0014] Preferably, the indicator member works or shows said numbers and/or symbols mechanically. This allows a very robust or simple construction of the nebulizer.

[0015] According to another aspect of the present invention, the nebulizer comprises a lock for locking the nebulizer against further use in a first locked state when the container is replaced, wherein the locked state is reset by resetting the lock when the container has been replaced, and comprises further a control member for controlling or driving the lock, wherein the control member is moved or rotated stepwise, with other words indexed, or more generally driven, by the force of a spring. This allows easy and/or improved handling or use of the nebulizer. In particular, any manual force or the like can be avoided to drive the control member and to actuate the lock. Instead, the force of the spring is used as an energy source.

[0016] According to a further aspect of the present invention, the lock and/or first locked state is blocked in a second blocked state against resetting if a predetermined number of containers has been used. Thus, the lock can be used not only for locking the nebulizer in the first locked state (which is reversible when the container is replaced) but also for locking the nebulizer in the second locked state (final locked state or life span blocking), which cannot be reversed anymore. This double-function allows easy or improved handling or use of the nebulizer as the construction of the nebulizer can be simplified and/or made very secure.

[0017] Preferably, the lock locks the nebulizer in the locked state against conveying of fluid into a pressure generator and/or against tensioning of a drive spring of the nebulizer. This allows easy and/or improved handling of the nebulizer, in particular as it allows intuitive handling of the nebulizer.

[0018] Preferably, the control member or lock locks the nebulizer or its housing part against opening or container replacement before the first locked state has been reached and/or in the second locked state. Thus, early opening of the nebulizer and early container replacement can be avoided. Further, opening of the nebulizer and container replacement can be prevented in the irreversible final locked state, i.e., in the second locked state. This facilitates intuitive handling. Further, it can be prevented that the nebulizer is opened before the respective container has been (sufficiently) used or has been emptied. Thus, potential soiling of inner parts of the nebulizer can be minimized and/or a defined handling can be secured.

[0019] According to another aspect of the present invention, the nebulizer comprises a securing device associated to a replaceable container of the nebulizer, wherein the securing device prevents that the associated container can be connected or used with the nebulizer once more after it has already been used with the nebulizer, wherein the securing device comprises locking portions, in particular arms, which force apart and/or move radially when the container is or has been connected to or with nebulizer for the first time and/or after the used container has been detached from the nebulizer such that the use container cannot be connected or used the nebulizer once more. This allows easy and/or improved handling of the nebulizer. In particular, it allows a very secure and simple construction.

[0020] According to another aspect of the present invention, the nebulizer comprises a housing part which holds the container inseparably and which can be attached to the nebulizer for connecting the container to the nebulizer, wherein the housing part comprises a coding such that the housing part can be attached to the nebulizer and the container can be connected to the nebulizer only if the coding matches with a coding formed at the nebulizer or an inner part of the nebulizer. Preferably, the coding is formed at the housing part by one or more coding elements that can be attached to the housing part by clipping and/or inserting. Preferably, the coding is formed at the nebulizer or inner part by a retaining part provided with one or more coding portions, wherein the retaining part is connected to the nebulizer or inner part by clipping and/or inserting. This allows a very simple realization and adaptation of the coding so that only certain housing parts and containers can be used with a nebulizer.

[0021] The above aspects of the present invention and the further aspect described below can be realized independently from each other, and in any combination.

[0022] Further advantages, features, characteristics and aspects of the present invention will become apparent from the following detailed description of preferred embodiments with reference to the accompanying drawings.

BRIEF DESCRIPTION OF THE DRAWINGS

[0023] FIG. **1** is a schematic section of a known nebulizer in a relaxed state;

[0024] FIG. **2** is a schematic section, rotated 90° compared with FIG. **1**, of the known nebulizer in a tensioned state;

[0025] FIG. **3** is a schematic section of a nebulizer in a delivery state with a partly closed housing and with a pre-installed, closed container;

[0026] FIG. **4** is a schematic section of the nebulizer according to FIG. **3** in an activated, tensioned state with completely closed housing and with opened container;

[0027] FIG. **5** is a schematic section of the nebulizer according to FIG. **4** in a relaxed state;

[0028] FIG. **6** is a schematic perspective view of a nebulizer according to the present invention with a separate housing part shown with a partly cut-away portion, the housing part having a securing device fixedly holding a container of the nebulizer;

[0029] FIG. **7** is a schematic section of the nebulizer according to FIG. **6**;

[0030] FIG. **8** is a schematic side view of the nebulizer according to FIG. **6** with partly mounted housing part and with some cut-away portions, the container being held in a fixed position;

[0031] FIG. **9** is a schematic section of the nebulizer according to FIG. **6** in the completely closed state with opened securing device so that the container can move axially;

[0032] FIG. **10** is a schematic section of the housing part with the associated container after use or separation from the nebulizer;

[0033] FIG. **11** is a perspective view of an upper part of the nebulizer according to FIG. **6** without the housing part and with partly cut-away portions;

[0034] FIG. **12** is a side view of a control/indicator member of the nebulizer according to FIG. **6**;

[0035] FIG. **13** is a perspective view of the control/indicator member according to FIG. **12**;

[0036] FIG. **14** is a perspective side view of a lock member of the nebulizer according to FIG. **6**;

[0037] FIG. **15** is another perspective view of the lock member according to FIG. **14**; and

[0038] FIG. **16** is a schematic exploded view of the nebulizer according to a modified embodiment.

DETAILED DESCRIPTION OF THE INVENTION

[0039] In the Figures, the same reference numerals are used for identical or similar parts, resulting preferably in corresponding or comparable properties and advantages, even if the associated description is not repeated.

[0040] FIGS. **1** & **2** show a known nebulizer **1** for atomizing a fluid **2**, particularly a highly effective pharmaceutical composition, medicament or the like, diagrammatically shown in a untensioned, i.e., relaxed, state (FIG. **1**) and in a tensioned state (FIG. **2**). The nebulizer **1** is constructed in particular as a portable inhaler and preferably operates only mechanical and/or without propellant gas.

[0041] When the fluid **2**, preferably a liquid, more particularly a pharmaceutical composition, is nebulized, an aerosol **14** (FIG. **1**) is formed, which can be breathed in or inhaled by a user. Usually, the inhaling is done at least once a day, more particularly, several times a day, preferably at set intervals, depending on the complain or illness from which a patient is suffering.

[0042] The nebulizer **1** is provided with or comprises an insertable or replaceable container **3** containing the fluid **2**. The container **3** thus forms a reservoir for the fluid **2**, which is to be nebulized. Preferably, the container **3** contains multiple doses of fluid **2** or active substance in particular sufficient to

provide up to 200 dosage units or doses, for example, i.e., to allow up to 200 sprays or applications. A typical container **3**, as disclosed in International Patent Application Publication WO 96/06011 A1 and corresponding U.S. Patent 5,833,088, holds e.g., a volume of about 2 to 20 ml.

[0043] It is noted that the dose can vary, in particular depending on the fluid **2** or medicament. The nebulizer **1** can be adapted respectively.

[0044] Further, the number of doses contained in the container **3** and/or the total volume of the fluid **2** contained in the container **3** can vary depending on the fluid **2** or respective medicament and/or depending on the container **3** and/or depending on the necessary medication or the like.

[0045] Preferably, the container **3** can be replaced or exchanged, wherein the number of containers **3**, which can be used with the same nebulizer **1**, is preferably restricted , e.g., to a total number of four or five containers **3**.

[0046] The container **3** is preferably substantially cylindrical or cartridge-shaped and once the nebulizer **1** has been opened the container **3** can be inserted therein preferably from below and changed if desired. It is preferably of rigid construction, the fluid **2** in particular being held in a collapsible bag **4** in the container **3**.

[0047] The nebulizer **1** preferably comprises a pressure generator **5** for conveying and nebulizing the fluid **2**, particularly in a preset and optionally in an adjustable dosage amount. The nebulizer or pressure generator **5** preferably comprises a holder **6** for releasably holding the container **3**, a drive spring **7** associated to the holder **6**, only partly shown, and/or a blocking element **8** preferably in form of or with a button for preferably manual actuation or depressing, which blocking element **8** can catch and block the holder **6** and can be manually operated to release the holder **6** allowing drive spring **7** to expand. The nebulizer **1** or pressure generator **5** preferably comprises further a conveying element, such as a conveying tube **9**, a non-return valve **10**, a pressure chamber **11** and/or an nozzle **12** for nebulizing the fluid **2** into a mouthpiece **13**. The completely inserted container **3** is fixed or held in the nebulizer **1** via the holder **6** such that the conveying tube **9** penetrates into the container **3**. The holder **6** is preferably constructed so that the container **3** can be exchanged.

[0048] When the drive spring **7** is axially tensioned in the tensioning process the holder **6** with the container **3** and the conveying tube **9** are moved downwards in the drawings and fluid **2** is sucked out of the container **3** into the pressure chamber **11** of the pressure generator **5** through the non-return valve **10**. In this state, the holder **6** is caught by the blocking element **8** so that the drive spring **7** is kept compressed. Then, the nebulizer **1** is in the so-called activated or tensioned state.

[0049] During the subsequent relaxation in the nebulization process, after actuation or pressing of the blocking element **8**, the fluid **2** in the pressure chamber **11** is put under pressure as the conveying tube **9** with its now closed non-return valve **10** is moved back in the pressure chamber **11**, here in the drawings upwards, by the relaxation or force of the drive spring **7** and now acts as a pressing ram or piston. This pressure forces the fluid **2** through the nozzle **12**, whereupon it is nebulized into the aerosol **14**, as shown in FIG. **1**.

[0050] Generally, the nebulizer **1** operates with a spring pressure of 5 to 200 MPa, preferably 10 to 100 MPa on the fluid **2**, and/or with a volume of fluid **2** delivered per stroke of 10 to 50 μl, preferably 10 to 20 μl, most preferably about 15 W. The fluid **2** is converted into or nebulized as aerosol **14**, the droplets of which have an aerodynamic diameter of up to 20 μm, preferably 3 to 10 μm. Preferably, the generated jet spray has an angle of 20° to 160°, preferably 80° to 100°. These values also apply to the nebulizer **1** according to the teaching of the present invention as particularly preferred values.

[0051] A user or patient (not shown) can inhale the aerosol **14**, preferably while an air supply can be sucked into the mouthpiece **13** through at least one optional air supply opening **15**.

[0052] Preferably, the nebulizer **1** or drive spring **7** can be manually activated or tensioned, in particular by actuation of an actuation member.

[0053] The nebulizer **1** preferably comprises an upper housing part **16** and an inner part **17** which is rotatable relative thereto (FIG. **2**) having an upper part **17***a* and a lower part **17***b* (FIG. **1**), while an, in particular, manually operable (lower) housing part **18** is releasable fixed, particularly fitted or held onto the inner part **17**, preferably by means of a retaining element **19**. Preferably, the housing parts **16**, **18** form a housing of the nebulizer **1**. In order to insert and/or replace the container **3** the housing can be opened and/or the housing part **18** can be detached from the nebulizer **1** or its housing.

[0054] The actuation member, preferably the housing part **18**, can be actuated, here rotated relative to the upper housing part **16**, carrying with it or driving the inner part **17**. As a result the drive spring **7** is tensioned in the axial direction by means of a gear or transmission (not shown) formed between the inner part **17**, in particular its upper part **17***a*, and the holder **6** and acting on the holder **6**. During tensioning, the container **3** is moved axially downwards until the container **3** assumes an end position as shown in FIG. **2**. In this activated or tensioned state the drive spring **7** is under tension and can be caught or held by the blocking member **8**. During the nebulizing process the container **3** is moved back into its original position (non-tensioned position or state shown in FIG. **1**) by the drive spring **7**. Thus, the container **3** executes a lifting or stroke movement during the tensioning process and during the nebulizing process.

[0055] The housing part **18** preferably forms a cap-like lower housing part and fits around or over a lower free end portion of the container **3**. As the drive spring **7** is tensioned the container **3** moves with its end portion (further) into the housing part **18** or towards the end face thereof, while an aeration means, such as an axially acting spring **20** arranged in the housing part **18**, comes in contact with base **21** of the container **3** and pierces the container **3** or a base seal thereon with a piercing element **22** when the container **3** makes contact with it for the first time, to allow air in or aeration.

[0056] The nebulizer **1** preferably comprises a counter device **23**, which counts the actuations of the nebulizer **1**, preferably by detecting its tensioning or the rotation of the inner part **17** relative to the upper part **16** of the housing. Preferably, the counter device **23** or an associated lock locks the (further) actuation or use of the nebulizer **1**, e.g., blocks further rotation of the housing part **18**/inner part **17** and, thus, tensioning of the nebulizer **1** or its drive spring **7** and/or blocks actuation of the blocking element **8**, when a certain number of actuations or operations or discharged doses has been reached or exceeded.

[0057] A preferred construction and mode of operation of the inhaler or nebulizer **1** will now be described in more detail with reference to FIGS. **3** to **5**, but emphasizing only essential differences from the nebulizer **1** according to FIGS. **1** & **2**. The remarks relating to FIGS. **1** & **2** thus apply preferably

accordingly or in a similar manner, while any desired combinations of features of the nebulizer **1** according to FIGS. **1** & **2** and the nebulizer **1** described below are possible.

[0058] Preferably, the container **3** is pre-installed. This can be realized in particular as shown in International Patent Application Publication WO 2006/125577 A2 and corresponding U.S. Patent Application Publication 2007/107720 A1, or as described in the following.

[0059] FIG. **3** shows the nebulizer **1** in a delivery state with preferably pre-installed container **3**, which is still closed. In this state, the housing of the nebulizer **1** is not completely closed, in particular the housing part **18** is not completely pushed on the inner part **17**. FIGS. **4** & **5** show the nebulizer **1** in an activated state with the housing completely closed and with the container **3** opened. In FIG. **4**, the nebulizer **1** or drive spring **7** is tensioned, i.e., the container **3** is in its lower position. FIG. **5** shows the nebulizer **1** in a non-tensioned state, e.g., after dispensing or nebulizing of one dose of the fluid **2**; the container **3** is in its upper position.

[0060] The container **3** comprises a fluid outlet **24** for outputting the fluid **2** to be dispensed. In particular, the fluid outlet **24** allows a fluidic connection between the container **3** or its bag **4**, on one hand, and the nebulizer **1**, its pressure generator **5** or the conveying element on the other hand.

[0061] The fluid outlet **24** has an inner closure **25** that is preferably formed by a septum, a membrane, a plastic seal or the like and/or is provided inside the container **3**. Optionally, a second or outer closure **26** can be provided such that successive opening is possible by means of one common element, in particular the conveying element or conveying tube **9** or the like, and/or by piercing.

[0062] Preferably, the first or inner closure **25** is formed or supported by a closure part **27** extending from the outlet or head end of the container **3** into the container **3** or bag **4**. The second or outer closure **26** is preferably located adjacent to the head or axial end of the container **3** and/or held or connected to a flange **28**, which can be formed by the closure part **27** or any other suitable part. However, other constructional solutions are possible.

[0063] In the delivery state according to FIG. **3**, the container **3** has been pre-installed, i.e., inserted into the nebulizer **1**. However, the container **3** or its fluid outlet **24** is not yet opened. In particular, the second closure **26** is already opened, but not the first closure **25**. This is achieved in particular in that the housing of the nebulizer **1** is closed only partly, i.e., not completely, in the delivery state.

[0064] In particular, the container **3** is attached to or held by or secured in the housing part **18**, in particular by a transportation lock **29**, which is preferably arranged within or at the housing part **18**. The transportation lock **29** holds the container **3** preferably temporarily, in particular before attaching the housing part **18** to the nebulizer **1** and/or in the delivery state. In particular, the transportation lock **29** holds the container **3** fixed during the fluidic connection of container **3** and/or during the mechanic connection of container **3**, here with holder **6**. Preferably, the transportation lock **29** holds the container **3** fixed during opening, in particular piercing, the container **3**.

[0065] In the delivery state, in which the nebulizer **1** can be shipped or delivered to the user or is still packed, the nebulizer **1** or the housing part **18** is preferably secured, in particular by means of a securing member **30**, e.g., a banderole, such that the container **3** and/or housing part **18** are held sufficiently spaced from the nebulizer **1** or upper housing part **16** and/or prevented from being completely closed or completely inserted or pushed on the conveying element or tube **9**, the housing or inner housing part **17** or the like and/or such that (complete) opening of the container **3**, namely of the first closure **25**, is prevented.

[0066] Once the security member **30** has been removed a user (not shown) can push the housing part **18** fully on in the axial direction and thereby open the container **3**, i.e., first closure **25**, by inserting the conveying element or conveying tube **9**. FIGS. **4** and **5** show this activated state with the housing part **18** pushed fully on and/or the container **3** open (fluidically connected to the nebulizer **1** or its pressure generator **5** or the conveying element or tube **9**).

[0067] FIG. **4** shows the nebulizer **1** or container **3** in the activated state, the container **3**, i.e., first closure **25**, is open, i.e., the container **3** or its fluid **2** is fluidically connected to the nebulizer **1** or its pressure generator **5**, and the housing part **18** has been pushed fully on in the axial direction. In order to bring the holder **6** into (complete) engagement with the container **3** at the head end and then be able to move the container **3** back and/or forth for the suction/tensioning and pressing strokes, it may be necessary to tension the nebulizer **1** or it drive spring **7** for the first time. During this tensioning process, the holder **6** is moved together with the conveying tube **9** axially towards or into the housing part **18**, thus bringing the holder **6** into (complete) engagement with the container **3** and preferably also moving or pressing the container **3** against the piercing element **22** in the region of the base of the housing part **18** and thereby piercing or opening a venting hole **31** in the container base **21**. FIG. **4** shows the nebulizer **1** in this tensioned and activated state. The holder **6** is engaged with the container **3** and the conveying tube **9** has been fully inserted into the container **3**.

[0068] FIG. **5** shows the nebulizer **1** in the relaxed, untensioned state, i.e., after atomization or discharge of a dose of the fluid **2**. The holder **6** and the container **3** are in the upper position. The holder **6** is still engaged with the container **3** and remains engaged during the further uses of the nebulizer **1**. Further, the container **3** is still open and fluidically connected, i.e., the nebulizer **1** remains activated.

[0069] To prevent unwanted opening of the container **3**, particularly of the first closure **25**, in the delivery state of the nebulizer **1**, and/or to prevent (axial) movement of the container **3** relative to the associated housing part **18** before complete closing of the nebulizer **1**, preferably the transportation lock **29** is provided. By frictional, forcible or interlocking engagement, for example, the transportation lock **29** prevents the container **3** from undesirably moving axially.

[0070] Preferably, the opening of the transportation lock **29** occurs automatically when closing the nebulizer **1** or its housing completely, i.e., when snapping or pushing on the housing part **18** completely towards the upper housing part **16**. During this (preferably linear, axial or telescopic) closing movement, the transportation lock **29** is opened and the container **3** released in axial direction preferably during or after piercing or opening the container **3** and/or preferably during only a last part of the movement and/or just little before the final completely closed position is reached or just when the final completely closed position is reached.

[0071] During the closing movement, the transportation lock **29** is preferably opened by the direct or indirect interaction with or actuation by the housing of the nebulizer **1**, the inner part **17** or its lower part **17*b*** or the like. Preferably, the container **3** and/or first closure **25** are opened as well as the

transportation lock **29** by means of a common actuation and/or component, here the closing movement of the nebulizer **1** or its housing or bottom part **18**.

[0072] FIGS. **4** & **5** show the transportation lock **29** in the open position, i.e., wherein the container **3** is free to move axially.

[0073] In the following, a preferred embodiment of the nebulizer **1** according to the present invention will be described in more detail with reference to the further figures, wherein only essential differences from the nebulizer **1** described above or shown in FIGS. **1** to **5** will be emphasized or described. Thus, the remarks relating to FIGS. **1** to **5** apply preferably accordingly or in a similar manner, while any desired combinations of features are possible.

[0074] FIG. **6** shows the nebulizer **1** in an exploded perspective side view with in a state in which the lower housing part **18** (partly cut open for illustration purposes) with associated container **3** is separated from the upper housing part **16**. The container **3** has not been inserted or pre-installed in the nebulizer **1** yet. In other words, the nebulizer **1** has not been assembled yet and is not in the preferred delivery state yet.

[0075] FIG. **7** shows the nebulizer **1** in a schematic section as well as the container **3** and lower housing part **18** which are still separated from the upper housing part **16** of the nebulizer **1**.

[0076] The nebulizer **1** or its housing or housing part **18** preferably comprises a securing device **32** which may have different functions. The securing device **32** may hold the container **3** such that the container **3** is moveable back and forth within the completely closed housing for conveying the fluid **2**, pressure generation and/or nebulization, wherein the securing device **32** may ensure that the container **3** is inseparable from the housing or housing part **18**. Thus, only complete replacement of the housing part **18** together with the respective container **3** is possible. Alternatively or additionally, the securing device **32** may form the transportation lock **29**. Alternatively or additionally, the securing device **32** may prevent that the used container **3** and/or used housing part **18** can be reconnected to or used with the nebulizer **1** once more.

[0077] When the securing device **32** or transportation lock **29** is closed, the container **3** is held for opening by inserting the conveying element or tube **9**, preferably wherein a press-fit is formed between the conveying element or tube **9** and the container **3** or closure part **27**, and/or for (completely) connecting the container (head) to the holder **6**. In other words, the transportation lock **29** or securing device **32** form preferably a counter-bearing for the container **3** during closing of the nebulizer **1**.

[0078] When the securing device **32** or transportation lock **29** is closed, the container **3** is held spaced from the piercing element **22**.

[0079] The securing device **32** is preferably located or arranged or fixed at or in the housing part **18** as shown in FIGS. **6** and **7**.

[0080] Preferably, the securing device **32** comprises a metal and/or stamped part and/or is formed of a single, unitary part. Preferably, the securing device **32** is made of steel, in particular, spring steel. Preferably, the securing device **32** is produced from sheet material by cutting, stamping or the like and/or by bending. Preferably, the securing device **32** or a part thereof forms a cage, in particular encompassing the container **3** or an end portion thereof, in particular, the container base **21**.

[0081] Preferably, the securing device **32** comprises holding elements **33** and/or locking elements **34**. The elements **33** and/or **34** are preferably designed like arms, fingers, leaves or the like. In particular, the elements **33**, **34** are alternately distributed over the circumference of the container **3**. Preferably, the securing device **32** comprises multiple holding elements **33** and multiple locking elements **34**, in particular three or more holding elements **33** and three or more locking elements **34**. Preferably, the elements **33**, **34** extend at least essentially axially and/or in the direction of the back and forth movement of the container **3** and/or in the direction of the longitudinal or main extension of the nebulizer **1** or main dispensing direction of the aerosol **14**.

[0082] Preferably, the elements **33**, **34** are held by or connected with a base **35** of the securing device **32**, as shown in FIG. **8**. FIG. **8** shows the nebulizer **1** in a schematic side view with already partly mounted housing part **18** and with some cut-away portions. The transportation lock **29** or securing device **32** is still closed or locked, i.e., the container **3** is still securely held so that it cannot axially move (axially means in the direction of the back and forth or stroke movements).

[0083] Preferably, the securing device **32** or base **35** comprises or holds the piercing element **22** for piercing the container **3**, i.e., opening the container base **21** or its venting hole **31** or a respective sealing of the container **3** or the like in the activated and tensioned state, i.e., when the container **3** reaches its lower end position. In the illustrated and preferred embodiment, the piercing element **22** is formed by a respective bending of a spring portion **36** of the securing device **32** or its base **35**. The spring portion **36** can support or facilitate the (complete or final) connection of the container **3** to the holder **6**.

[0084] The securing device **32** or base **35** preferably comprises at least one or multiple fixing portions **37** for fixing the securing device **32** at or in the nebulizer **1** or housing or housing part **18**. In particular, the fixing portions **37** may fix the securing device **32** when it is pressed into the housing part **18** by cooperating with the sidewall of the housing part **18**. However, it is also possible to over-mold the securing device **32**, its base **35**, the fixing portions **37** or the like. Moreover, the securing device **32** could be connected with the housing part **18** or the like in any other suitable manner, in particular, by a separate fixing member, by gluing or the like.

[0085] As already mentioned, the securing device **32** preferably forms the transportation lock **29** for holding the container **3** unmovable in the housing or housing part **18** in the delivery state of the nebulizer and/or before attaching the housing part **18** to the nebulizer **1**. In this situation (in particular in the delivery state), the container **3** or a preferably radially protruding and/or circumferentially extending part or edge **38** thereof, preferably formed at the container base **21**, is held preferably in a form-fit manner and/or between the holding elements **33** and locking elements **34**, in particular between respectively formed or bent end portions **33***a* and **34***a* of the elements **33** and **34**, respectively, as shown in FIGS. **6** to **8**.

[0086] In the illustrated embodiment, the container **3** and/or edge **38** is caught between the end portions **33***a* and **34***a*, preferably alternatively. The holding elements **33** and/or end portions **33***a* grip or extend over the edge **38**, and the locking elements **34** or its end portions **34***a* grip or extend under the edge **38**, so that the edge **38** and container **3** are securely held in between, in particular by form-fit, preventing any axial movement of the container **3** relative to the securing device **32**

and relative to the associated housing part **18** in this state, i.e., with locked transportation lock **29**/securing device **32**.

[0087] Preferably, the end portions **33***a* and/or **34***a* are formed like claws or the like and/or extend preferably radially inwardly.

[0088] Preferably, the elements **33** and/or **34** can flex with its free ends radially outwardly.

[0089] Preferably, the securing device **32** is designed such that the associated container **3** can be connected with the securing device **32** by a respective axial force or movement, wherein the elements **33** and/or **34** flex preferably automatically outwardly as required to receive the container **3** in the locked position as shown in FIGS. **6** to **8**. However, if necessary, a suitable tool (not shown) or the like could be used alternatively or additionally for assembly if necessary.

[0090] For example, the ends of the end portions **33***a* could be inclined such that the container **3** may be inserted into or connected with the securing device **32** by a respective axial movement so that the holding elements **33** flex outwardly to allow passing of edge **38**.

[0091] Preferably, the holding elements **33** or its end portions **33***a* prevent separation of the container **3** from the securing device **32** and, thus, from the associated housing part **18** or the like.

[0092] In the present embodiment, the holding elements **33** extend preferably above the end portions **33***a* and/or form or comprise preferably arm-like guiding and/or locking portions **33***b*. These axial extensions and/or these portions **33***b* extend axially beyond the end portions **33***a* and/or may cooperate with the container **3** or its edge **38** during axial assembly of the container **3** with the securing device **32** such that the holding elements **33** are flexed sufficiently outwardly so that the edge **38** can pass the end portions **33***a* and the container base **21** can be seated on the end portions **34***a* of the locking elements **34**.

[0093] The locking elements **34** preferably comprise actuation portions **34***b* at its free ends extending axially beyond the end portions **34***a*. The actuation portions **34***b* may radially guide the container **3** and/or facilitate insertion of the container **3** or its edge **38** between the free ends of the locking elements **34** although the locking elements **34** are preferably radially inwardly biased as well as the holding elements **33**.

[0094] When, the container **3** is held with its edge **38** between the end portions **33***a*, **34***a*, the transportation lock **29**/securing device **32** is closed, i.e., the container **3** cannot move axially within the housing part **18** or nebulizer **1**.

[0095] For opening the transportation lock **29** or securing device **32**, the locking elements **34** and/or its end portions **34***a* are flexed preferably radially outwardly so that the container **3** can freely move axially, in particular restricted, such that the edge **38** can only move axially within the securing device **32** and/or that the axial movement is restricted (in the drawings upwardly) by the holding elements **33** or its end portions **33***b* and/or such that the container **3** cannot be separated from the securing device **32**. This opening of the transportation lock **29** or securing device **32** will take place when activating the nebulizer **1**, when using the nebulizer **1** for the first time and/or when completely closing the nebulizer **1**. Then, the container **3** can axially move, in particular back and forth and/or with its edge **38** between the end portions **33***a* and the piercing element **22** in the present embodiment. This situation is schematically shown in the schematic section according to FIG. **9** which shows the nebulization with closed housing or housing part **18** and with opened transportation lock **29**/securing device **32**.

[0096] In FIG. **9**, the container **3** is shown in its lower position similar to FIG. **4**, in particular, wherein the container base **21** is in contact with the piercing element **32**. However, the nebulizer **1** is not shown in the tensioned state, i.e., the holder **6** is not in its lower position, i.e., the holder **6** is not yet connected with the upper end or head of the container **3**. Normally, the holder **6** would be connected to the container **3** in this situation with the container **3** in the lower position. In other words, usually the nebulizer **1** or drive spring **7** would be tensioned in the situation with the container **3** being in the lower position.

[0097] Preferably, the container is finally or completely or correctly connected to holder **6** when tensioning the nebulizer **1** or its drive spring **7** for the first time after completely closing the nebulizer **1**. However, it is generally also possible that the nebulizer **1** is in the tensioned state, i.e., the drive spring **7** is already tensioned and the holder **6** is in the lower position, before or during (first) assembly with lower housing part **18**. Consequently, the holder **6** should directly connect with the container **3**, when completely closing the lower housing part **18**, and the situation shown in FIG. **9** should normally not occur.

[0098] In FIG. **9**, the end portions **34***a* are moved radially outwardly in order to open the transportation lock **29** or securing device **32**. This is achieved preferably by flexing the locking elements **34** radially outwardly. This can be achieved in particular by acting on the actuation portions **34***b*.

[0099] Preferably, the transportation lock **29** is opened or the locking elements **34** are flexed outwardly when completely closing the nebulizer **1** or its housing part **18**, in particular by cooperation with or abutment of the inner part **17**, its lower part **17***b*, a retaining part **39** and/or a securing part **40**. The retaining part **39** is preferably arranged at the upper housing part **16** or inner part **17**. The securing part **40** is preferably arranged in the lower housing part **18**.

[0100] The retaining part **39** is connected to the lower or free end of the inner part **17** or its lower part **17***b* in order to hold, bear or support an end (the lower end) of the drive spring **7**. FIGS. **3** to **5** show a preferred construction of the retaining part **39**. It is preferably formed as a ring and/or provided with hooks or the like for interconnection with the inner part **17**. In the preferred embodiment, the retaining element **19** forms a unitary component or portion of the retaining part **39**. However, other constructional solutions are possible.

[0101] In the embodiment shown in FIGS. **3** to **5**, a preferably ring-like securing part **40** opens the transportation lock **29**, in particular flexible arms of the transportation lock **29**, to allow axial movement of the container **3**. This securing part **40** keeps the transportation lock **29** or its flexible arms open when the nebulizer **1** or its housing part **18** has been completely closed. The securing part **40** is pushed axially downwards by abutment of the inner part **17** or retaining part **39** within the housing part **18** when completely closing the nebulizer **1**.

[0102] In the preferred embodiment shown in FIGS. **6** to **15**, and particular in FIG. **9**, the nebulizer **1**, housing part **18** or securing device **32** comprises the preferably ring-like securing part **40** for opening the transportation lock **29**/securing device **32** or its locking elements **34**. In particular, the securing part **40** is pushed axially downwards when closing the nebulizer **1** so that it is moved between the locking ele-

ments **34** or its actuation portions **34***b* and exerts an axial force radially outwards. Preferably, an inclined plane converts the axial or closing movement into an opening or radial movement which forces the actuation portions **34***b* radially outwardly when the securing part **40** is forced axially downwardly, here by abutment of the retaining part **39**, in particular in the axial end position shown in FIG. **9**.

[0103] Preferably, the securing part **40** and/or locking elements **34** or actuation portions **34***b* comprise a respectively inclined guiding surface **41** or the like to convert the axial closing movement or movement of the securing part **40** into the desired radial opening movement of the locking elements **34** or actuation portions **34***b* and, thus, of the end portions **34***a* to open the transportation lock **29**, in particular when the housing has been completely closed or when the housing part **18** has been pushed completely on the nebulizer **1**.

[0104] However, other constructional solutions are possible to realize opening of the transportation lock **29** or securing device **32** or its locking elements **34** or end portions **34***a* when closing the nebulizer **1** or its housing parts **18**.

[0105] In the preferred embodiment, the securing part **40** serves alternatively or additionally another purpose. Namely, the securing part **40** prevents the locking portions **33***b* from moving radially apart or flexing radially outwards before the nebulizer **1** is assembled with its housing part **18** for the first time.

[0106] As already mentioned, the securing device **32** preferably prevents that a container **3** can be connected to or used with the nebulizer **1** once more. In particular, the securing device **32** can prevent a used housing part **18** or used container **3** from being reconnected to the nebulizer **1** once it has been detached from the nebulizer **1**. Thus, the securing device **32** prevents any undesired reuse of the container **3** and/or housing part **18** with its preferably inseparable container **3**.

[0107] In the present embodiment, the undesired reuse is prevented in that the locking portions **33***b* force apart or move apart or radially and/or outwards at least after the used container **3** and/or housing part **18** has been detached from the nebulizer **1** such that the used container **3** and/or housing part **18** cannot be connected to or used with the nebulizer **1** once more. Preferably, the locking portions **33***b* are biased such that the locking portions **33***b* force apart or move radially and/or outwards after release.

[0108] In the preferred embodiment, the locking portions **33***b* are held together or held against moving apart, radially and/or outwards by the securing part **40** (schematically indicated in FIG. **7**) before the container **3** and the associated housing part **18** have been connected to the nebulizer **1** for the first time. In this pre-assembly state, the securing part **40** is located preferably near the free ends of the locking portions **33***b* and/or it encompasses that locking portions **33***b* such that locking portions **33***b* are held sufficiently close together to be inserted with its free ends within the retaining part **39** and/or drive spring **7** when pushing the housing part **18** axially onto the nebulizer **1** or its inner part **17**, in particular lower part **17***b*.

[0109] The securing part **40** may cooperate with the locking portions **33***b* or protrusions **33***c* thereof (shown in FIG. **9**) preferably such that the securing part **40** is held by a preferably radial engagement and/or frictional force in its (upper) position holding the locking portions **33***b* or holding elements **33** together in the pre-assembly state. Later during assembly, in particular during complete closing of the housing or pushing on the lower housing part **18**, the locking portions **33***b* are moved within the retaining part **39** and drive spring **7**, while the securing part **40** is moved axially downwards or towards the securing device **32**, the container base **21** and/or bottom part of the end of the lower housing part **18**. Then, the end position or completely assembled position is reached as shown in FIG. **9**. In this state, the radially biased locking portions **33***b* are held together by the drive spring **7** as the securing part **40** does not hold the locking portions **33***b* together any more.

[0110] Preferably, the securing part **40** has opened the transportation lock **29** or locking elements **34** in the last part of the closing movement or just when completely closing the nebulizer **1** as already mentioned.

[0111] The schematic section of FIG. **10** shows the housing part **18** together with its associated container **3** after it has been used and separated from the nebulizer **1**. The securing part **40** remains preferably in its lower position. The transportation lock **29** is (still) open. The container **3** is shown in its upper position where it is held by the end portions **33***a* of the holding elements **33** when detaching the container **3** from the nebulizer **1**, in particular from the holder **6** and the conveying element or tube **9**.

[0112] FIG. **10** shows that the locking portions **33***b* have been forced apart, in particular due to its biasing or elastic force, here moved radially outwardly with its free ends in particular due to its preferably radial biasing or elastic force. This forced apart position of the locking portions **33***b* blocks reconnection of the container **3** and/or housing part **18** and/or securing device **32** with the nebulizer **1**. Thus, the already used container **3** cannot be reused. Thus, misuse of the container **3** or nebulizer **1** can be prevented.

[0113] The securing part **40** may additionally secure the holding elements **33** or its end portions **33***a* against radial opening when the securing part **40** is in its lower position as shown in FIGS. **9** and **10**. In this case, the securing part **40** contacts the holding elements **33** preferably on the outer side to prevent or restrict any outward flexing. Thus, the securing device **32** or its holding elements **33** or end portions **33***a* are secured against opening so that the container **3** or its edge **38** is securely held within the securing device **32** or the cage formed by the securing device **32** or holding elements **33**.

[0114] In the preferred embodiment, the counter device **23** is arranged preferably at the housing part **18** as schematically shown in FIGS. **7** to **10**. The counter device **23** counts the actuations or operations of the nebulizer **1** or the discharged doses. Preferably, the counter device **23** counts actuations or operations by detecting the rotation of the inner part **17** relative to the upper part **16** of the housing. With other words, the counter device **23** may count the tensioning the nebulizer **1** or its drive spring **7**. However, other constructional solutions are possible.

[0115] Preferably, the counter device **23** comprises a threaded spindle or shaft **42** with an associated, preferably unitary formed drive gear **43**. The counter device **23** preferably comprises further a rider **44** associated to the threaded shaft **42** and cooperating with the threaded shaft **42** such that the rider **44** is axially moved along the threaded shaft **42** as the shaft **42** is rotated.

[0116] The threaded shaft **42** is rotationally supported preferably in the lower housing part **18** and/or extents preferably parallel to the axial or longitudinal direction of the nebulizer **1** and/or to the axial or stroke movement of the container **3**.

[0117] The drive gear **43** is located preferably at an upper end of the threaded shaft **42** and/or housing part **18**, in particular such that it can mesh with a preferably inner teeth **45**

of the housing or upper housing part **16** of the nebulizer **1** in the assembled state, i.e., when the housing of the nebulizer **1** is completely closed, as schematically shown in FIG. **9**.

[0118] The counter device **23** or its rider **44**, in particular the axial position of the rider **44** along the threaded shaft **42**, may show or indicate the number of operations, in particular of tensioning, actuations or doses, which have already been performed or used with the current container **3** or which can still be performed with the current container **3**. This operation number can in particularly been shown by a pointer **46** and/or an associated scale or the like which are visible reasonable through a corresponding window or transparent part of the housing part **18**. It is noted that the number has not be shown precisely. In particular, it may be sufficient that the counter device **23**, the rider **44** or its pointer **46** give a rough indication of the number. For this purpose, it may be sufficient if the scale shows only different coloured areas or regions roughly indicating said number. Further, it is noted that other constructional solutions are possible as well.

[0119] The counter device **23** works preferably mechanically. This allows a very simple and robust construction and a very secure operation.

[0120] The counter device **23** may control or provide preferably locking of the nebulizer **1**, indicating any required container replacement and/or container counting. For this purpose, the monitoring **23** or the rider **44** preferably comprises an actuation part **47** as schematically shown in FIG. **8**. The actuation part **47** is preferably ridge-like and/or extending in axial direction and/or towards the upper housing part **16** and/or upwards.

[0121] The counter device **23** is associated to the respective housing part **18** and, thus, preferably to only one container **3** and counts operations of the nebulizer **1** with the respective container **3**, i.e., counts (only) the number of doses of fluid **2** removed or still removable from this container **3**.

[0122] It is noted that the first container **3** may be pre-installed together with the associated housing part **18** in the delivery state. This pre-installment is optional. Preferably, further separate containers **3** are delivered together with the nebulizer **1**, wherein each container **3** is inseparably connected with an associated housing part **18** and, thus, with an associated counter device **23**. Preferably, the counter device **23** or threaded shaft **42** of each housing part **18** is designed or provided with inhibition or brake means, such that any undesired counting or rotation is prevented before the respective housing part **18** is mounted to the nebulizer **1**.

[0123] The nebulizer **1** preferably comprises a device **48** for counting the number of containers **3** that have been used or still can be used with the nebulizer **1** and/or for indicating or displaying said container numbers and/or symbols indicating container replacement and/or end of use. This device **48** is preferably for monitoring and/or user guidance.

[0124] Preferably, said numbers and/or symbols are visible or shown through a transparent part or window **49** of the nebulizer **1**, in particular located in the upper housing part **16** as schematically indicated in FIG. **6**. In particular, said numbers and/or symbols are shown at a side face of the nebulizer **1**. Other arrangements or constructional solutions are possible.

[0125] FIG. **11** shows the nebulizer **1** without lower housing part **18** and without container **3** in a schematic side view, wherein parts of the upper housing part **16** have been cutaway so that the monitoring or guidance device **48** of the nebulizer **1** is better visible.

[0126] The nebulizer **1** or device **48** preferably comprises a member **50** for indicating or displaying said container number, symbols, a status, and/or user instructions, e.g., relating to container replacement, and/or for controlling locking of the nebulizer **1**. Thus, the member **50** is also called indicator member and/or control member. Preferably, both functions are achieved by the same or one single member **50**. However, it is also possible that the indicator member and the control member are formed by separate parts or multiple parts. Preferably, the following description shall be understood in such a broad sense.

[0127] Preferably, the nebulizer **1** or device **48** comprises a spring **51** for driving or moving, in particular rotating, the member **50**. This spring **51** is shown in FIGS. **7**, **8**, **9** and **11**.

[0128] Preferably, the member **50** is driven or rotated—in particular in multiple steps and/or from an initial (rotational) position to a final (rotational) position—only by spring force or by means of the spring **51**.

[0129] The spring **51** is preferably a helical, sleeve-like, ring-like and/or torsional spring and/or a leg spring. It is preferably located coaxially with and/or adjacent to the driven member **50**.

[0130] The spring **51** is preferably mounted in a biased state so that it applies a rotational force to the member **50**. For this purpose, the spring **51** is supported with one end or leg at the nebulizer **1**, in particular at the upper housing part **16**, and engages with its other end or leg with member **50**, e.g., by abutting a respective shoulder or bearing portion **67** (shown in FIGS. **12** and **13**) of the member **50** or the like.

[0131] FIG. **12** shows a preferred embodiment of the member **50** in a schematic side view. FIG. **13** shows the member **50** in a perspective view.

[0132] The member **50** is preferably formed by a unitary and/or molded part. The member **50** is preferably at least essentially ring-like and forms or comprises a preferably closed ring.

[0133] The member **50** comprises or is provided with numbers **52** indicating said container number, and/or with said symbols **53** for user guidance, in particular for indicating container replacement and/or end of use of the nebulizer **1**. Preferably, the numbers **52** and symbols **53** are shown and/or arranged on the member **50** such that one or more numbers **52** and one or more symbols **53** alternate. In particular, between preferably consecutive numbers **52** one or more symbols **53** are arranged and/or shown such that these symbols **53** indicate e.g., necessary container replacement, opening of the nebulizer **1**, closing of the nebulizer **1** or the like. This may be communicated or indicated by respective arrows, colours, marks or the like as symbols **53**. Further, the last symbol **53** may indicate end of use of the nebulizer **1** or complete locking of the nebulizer **1**, e.g., by an "X" or the like. This symbol **53** may be shown for example when the allowable number of operations or actuations of the nebulizer **1** have been reached or exceeded of the last container **3** that may be used with or in the nebulizer **1**, i.e., indicating total or final locking of the nebulizer **1**. In the present embodiment, preferably a sequence of at least two different symbols **53** is shown between different or consecutive numbers **52**. This sequence of symbols **53** preferably comprises a first symbol **53** (e.g., arrow downwards) indicating opening of the nebulizer **1** for container replacement and a second symbol **53** (e.g., arrow upwards) indicating closure of the nebulizer **1** for completing container replacement. However, it is also possible to show only one, potentially similar or identical symbol **53** between

the different or consecutive numbers **52**, such as one symbol **53** indicating container replacement. Preferably, only one special or end symbol **53**, such as "X", is shown at the end when the allowable number of operations or actuations of the nebulizer **1** has been reached or exceeded for the last container **3** and/or when the nebulizer **1** is finally blocked and/or when no further container **3** can be inserted.

[0134] The member **50** preferably comprises engagement or stop portions **54** which are preferably formed by radial protrusions or the like in the present embodiment. The stop positions **54** are used preferably to allow or realize a stepwise movement or rotation (indexing) of the member **50**.

[0135] The member **50** comprises further preferably blocking portions **55** which extend preferably axially and/or cooperate with the retaining element **19** to selectively lock the nebulizer **1** or housing part **18** against opening, in particular by selectively blocking the retaining element **19** against depressing or radial inward movement.

[0136] The member **50** preferably comprises control portions **56** for controlling or driving an associated lock **57** of the nebulizer **1**. The control portions **56** are formed preferably by protrusions or indentions or inclined guiding surfaces or the like which preferably extend radially and/or which are preferably formed on an outer circumference of the member **50** or its ring portion. However, other arrangements are possible as well.

[0137] The lock **57** is preferably formed by a locking member **58** or a portion **59** thereof, which is preferably tongue-like, leaf-like and/or flexible. FIG. **14** shows in a perspective view the locking member **58**. FIG. **15** shows in other perspective view the locking member **58**.

[0138] The locking member **58** is preferably made of metal and/or formed by plate material and/or a stamped part or the like. The locking member **58** is preferably ring-like and/or sleeve-like.

[0139] The portion **59** is preferably bent or indented or provided with such a form, in particular in radial direction and/or provided with a crimp, corrugation **60** or the like, for cooperating with the member **50** and/or at least one or more or all of the control portions **56**, in particular such that depending on the rotational movement or position of the member **50** the portion **59** is radially flexed, in particular outwards, or not. For example, the control portions **56** are indented or recessed so that a portion **59** is not flexed radially outwards if the respective corrugation **60**, which extends radially inwards from the respective portion **59**, is received in a portion **56** located adjacent to this corrugation **60** on the inner side. If the member **50** is in another rotational portion, the corrugation **60** may abut on the non-recessed outer periphery of member **50** so that the respective portion **59** is flexed outwards and the lock **57** is closed. Thus, the lock **57** is driven or controlled, namely closed and opened, by means of the control member **50**, in particular depending on its rotational position.

[0140] As already mentioned, the device **48** or member **50** is preferably driven by spring force, in the present embodiment by the force of spring **51**. In particular, the member **50** is rotated or indexed stepwise by means of the force of the spring **51**, wherein a ratchet or stop mechanism is provided to ensure the only stepwise moving or rotating of the member **50**. In particular, stop means engage with the stop portions **54** of the member **50**. In the present embodiment, the mechanism or stop means are preferably formed by one or two stop elements **61**. The stop elements **61** are preferably formed like arms and/or by the locking member **58**. The stop elements **61** are preferably elastically flexible to selectively allow a stop portion **54** to pass, i.e., to selectively allow the member **50** to index one step further, or to block a stop portion **54** and, thus, member **50** against further rotation. Preferably, the stop elements **61** are biased into a stopping position such that each stop element **61** extends into the way of movement of the stop portions **24** such that no stop portion **54** can pass the respective stop element **61**.

[0141] Preferably, at least two stop elements **61** are provided and preferably offset such that stop elements **61** can be actuated alternatively to allow the member **50** to index or move further by one step, i.e., by one rotational movement or increment when the stop elements **61** are alternatively actuated, e.g., flexed, in particular in axial and/or radial direction, to allow one stop portion **54** to pass. The stop elements **61** are preferably flexed upwards to allow the respective stop portion **54** to pass. The actuation of the stop elements **61** will be explained in more detail below.

[0142] The stop elements **61** or its free ends may be provided with a broadened abutment or engagement body or surface, in particular by respectively bending the element or arm **61**, by overmolding or the like. Each stop element **61** may be provided with a contact element **61***a* as schematically shown in FIG. **8**. The contact element **61***a* may be formed by overmolding and/or may be schoe-like. The contact element **61** a may form a stop or abutment for the stop portions **54** such that the member **50** is blocked against further rotation by force of spring **51** when the stop element **61** or contact element **61***a* is in the blocking position, here in the lower position shown in FIG. **8** where one stop portion **54** abuts the contact element **61** a and can not pass in circumferential direction. Here, the stop element **61** or contact element **61***a* is moved upwards or axially so that the blocked stop portion **51** can pass and the member **50** can index one step further in circumferential direction.

[0143] In the following, the operation and handling of the nebulizer **1** will be explained in more detail.

[0144] The nebulizer **1** may be delivered with a pre-installed container **3** and pre-attached housing part **18**. In this case, the nebulizer **1** or its housing part **18** is not completely closed so that the container **3** is not yet fluidically connected or opened.

[0145] Alternatively the nebulizer **1** may be delivered with a separate container **3** and housing part **18**. In this case the container **3** and the housing part **18** are preferably pre-assembled, i.e., form a unit that is separate from the nebulizer **1**.

[0146] In any case, the nebulizer **1** is preferably delivered together with multiple containers **3**, e.g., four or five containers **3**, wherein each container **3** is inseparably connected to an associated housing part **18**. These units of containers **3** and housing parts **18** can be exchanged so that the nebulizer **1** can be used with multiple containers **3** one after the other.

[0147] In both cases, the container **3** is preferably held unmoveably at or within the housing part **18** by the closed transportation lock **29** or securing device **39**.

[0148] In both cases, the housing part **18** preferably comprises a coding, e.g., by one or more grooves, protrusions, ribs **62** or the like distributed around the inner circumference of the housing part **18** and/or axially extending, as schematically indicated in FIG. **10**. This coding corresponds to the container **3** or the respective fluid **2** associated to the housing part **18**. The coding matches to a complementary coding at the nebulizer **1**, in particular at the inner part **17** or retaining part **39**, and is preferably formed by respectively arranged and/or

dimensioned indentions, coding portions **63**, such as protrusion, indentions, recesses or the like, in particular formed by or at the retaining ring or part **39**, as schematically shown in FIG. **11**. Only when the codings match, the housing part **18** and, thus, the container **3** can be pre-installed and/or (completely) connected to or with the nebulizer **1**.

[0149] Before (completely) closing the nebulizer **1** or its housing part **18**, the device **48** or indicator member **50** may indicate by a respective symbol **53**, such as an arrow pointing upwards, to completely close the nebulizer **1** or housing part **18**.

[0150] When the housing part **18** is completely closed, the container **3** associated to the housing part **18** is fluidically connected to the nebulizer **1**. This is detected or registered by the nebulizer **1** or device **48**. This detection of the connection of the housing part **18** and, thus, of an associated container **3** is preferably realized mechanically, in particular by actuating one of the stop elements **61** to allow the member **50** to index one step further, i.e., until the other stop element **61** stops further indexing or rotation of the member **50**. In the present embodiment, this registration or actuation is preferably achieved by a protrusion **64** formed at the housing part **18**, in particular at its upper front face, as shown in particular in FIG. **7**. When completely closing nebulizer **1**, the protrusion **64** abuts one associated stop element **61** or contact element **61***a* and consequently flexes the stop element **61** or contact element **61***a* upwards such that it does not stop a corresponding stop portion **54** of the member **50** any more, but allows the member **50** to move or rotate one step further, i.e., until the other stop element **61**, which has not been flexed out of engagement in this state, stops further rotation by stopping a corresponding stop portion **54**, preferably another one of stop portions **54**.

[0151] As already mentioned, the container **3** is preferably inseparable from the housing part **18**, the associated counter device **23** and/or associated securing device **32**. Thus, after connection of a new container **3** with the nebulizer **1**, the associated counter device **23** starts counting of the number of operations or uses of the respective container **3** that have already been performed or still can be performed. This operation number may be indicated or shown by the counter device **23** or its rider **44** or pointer **46** as already mentioned, while the device **48** or member **50** preferably only shows the container number **52**, i.e., the number of containers **3** that have already been used or still can be used with the nebulizer **1**.

[0152] Preferably, the nebulizer **1** is blocked against opening until the current container **3** has been (sufficiently) emptied, and/or until a predetermined number of operations or actuations has been reached or exceeded. This blocking of the nebulizer **1** or its housing part **18** against opening and/or container replacement is preferably achieved by a respective blocking portion **55** of the member **50** located below the retaining element **19** in this state as schematically indicated e.g., in FIG. **9**, such that the retaining element **19** cannot be depressed, i.e., the nebulizer **1** cannot be opened and the housing part **18** cannot be detached.

[0153] When a predetermined number of operations or actuations of the nebulizer **1** has been reached, the nebulizer **1** is blocked against further use with the current container **3**. This blocking is also called first locked state.

[0154] The first locked state is entered preferably by means of the counter device **23**. In particular, the rider **44** or its actuation part **47** cooperate with the device **48** to enter the first locked state, when a predetermined number of operations have been reached or exceeded with the current container **3**. Particularly, the rider **44** or its actuation part **47** reach an upper axial position in this state and actuate a respective stop element **61** or contact element **61***a* that is in blocking position or engagement with a stop portion **54**. Thus, the stop element **61** or contact element **61** a is preferably flexed or deformed such that the previously stopped stop portion **54** can pass and the member **50** is free to index one step further by the force of spring **51**. FIG. **8** shows a situation, in which the rider **44** and actuation part **47** are already near the upper position and near the position to actuate the associated stop element **61** or contact element **61***a*. However, in the state shown in FIG. **8** one stop portion **54** and the member **50** are still blocked against rotating one step further.

[0155] The above indexing of the member **50** by one step leads to the first locked state. In this state, the nebulizer **1** or retaining element **19** is unblocked so that it can be opened. In particular, the blocking portion **55** blocking actuation of the retaining element **19** in the previous state is moved further, so that the retaining element **19** is not blocked any more, but can be actuated or pushed in order to allow detachment of the housing part **18** for container replacement.

[0156] In the first locked state, the nebulizer **1**, device **48** or member **50** indicates preferably by a respective symbol **53**, in particular by an arrow pointing downwards, that container replacement is necessary and/or that the nebulizer **1** is locked against further use with the current container **3**.

[0157] By the above indexing of the member **50** to reach the first locked state, the nebulizer **1** is locked against further use. This is achieved in particular in that the member **50** drives the lock **57** to lock the nebulizer **1** against further actuation, preferably against further tensioning of the drive spring **7** and/or against rotating of the housing part **18**. This is preferably realized in that the rotation of the member **50** flexes the lock **57** or portion **59** of the locking member **58** radially outwards so that the flexed portion **59** leaves its non-locking position, into which it is biased, and locks further rotation of the inner part **17** relative to the upper housing part **16**. This locking is in particularly achieved in that a free end of the portion **59** engages into respective teeth or against respective abutment surfaces formed at the inner surface of the upper housing part **16**. In this respect it is noted that the device **48** is preferably arranged or mounted on inner part **17**, particular on its upper part **17***a*, wherein the preferably ring-like locking member **58** is preferably arranged around the rotatable member **50**. The locking member **58** is preferably secured against rotation relative to the inner part **17** by respective form fit engagement, preferably of the inner part **17** or at least one protrusion **17***c* thereof into a recess **65** of the locking member **58**. In the present embodiment, the recess **65** is preferably formed like a pocket or a portion cut-out of the periphery from one axial side. In particular, the locking member **58** may be provided with two or more recesses **65** as schematically shown in FIGS. **14** and **15**, for engagement of respective protrusions **17***c* or the like, in particular of the associated inner part **17**. However, other constructional solutions are possible as well.

[0158] Consequently, only member **50** is rotatable relative to inner part **17** and, thus, to locking member **58**. However, locking member **58** is rotatable together with inner part **17** relative to upper housing part **16**.

[0159] As already mentioned, the control member **50** is moveable, in particular rotatable, relative to locking member **58**. This relative rotation is meant when any rotation or index-

ing of the control member **50** is mentioned. In this context, it is considered that the device **48** and the locking member **58** are rotated together with the inner part **17**, but this rotation is different as this is the movement for tensioning the energy store, here spring **7**, and/or for delivering or sucking fluid **2** out of the container **3** by in particular axial movement of the conveying element or tube **9**.

[0160] The construction mentioned above, results in that the device **48** is rotated together with the inner part **17** each time the lower housing part **18** is rotated, i.e., when tensioning the drive spring **7**. This rotation is preferably performed in 180° steps. Therefore, the device **48** or indicator member **50** preferably comprises two sets of respective number **52** and/or symbols **53** that are shown alternately through the window **49**.

[0161] Thus, the member **50** preferably comprises two groups of numbers **52** and/or symbols **53**, each group with the respective sequence of numbers **52** and/or symbols **53**, wherein the groups are arranged offset by 180° on the member **50**. This offset correspondence to the rotational angle for each rotational actuation of the lower housing part **18** and inner part **17** for tensioning the nebulizer **1**/drive spring **7**.

[0162] Preferably, the control portions **56** and/or the peripheral parts of the control member **50** in between the portion **56** form an inclined or control plane or surface cooperating with the portion **59** or its cam or corrugation **60** such that the lock **57** or the locking can be actuated alone by the force of the spring **51** acting on the member **50**. In particular, the spring **51** or member **50** drives the lock **57**. Further, the member **50** controls the lock **57** or the locking. As the member **50** also forms an indicator member, the indicator member drives the lock **57** or locking as well.

[0163] In the present embodiment, the locking member **58** is preferably arranged outside or around the control member **50** at least around a cylindrical main part of control member **50**. In particular, the locking member **58** encompasses or covers at least substantially the cylindrical main part of the control member **50**. The locking member **58** preferably comprises two openings **66** (shown in FIGS. **14** and **15**) that are alternately aligned with window **49** depending on the rotational position of inner part **17** and, thus, of the locking member **58** so that the respective number **52** and/or symbol **53** is visible through the window **49** and through locking member **58**.

[0164] In the first locked state, the member **50** is preferably stopped against further rotation by the protrusion **64** where any other part corresponding to the attachment of the housing part **18**. When the housing part **18** is detached from the nebulizer **1** or its upper housing part **16** or inner part **17** for container replacement, this detachment is registered by unblocking the further movement or rotation of the member **50**. In particular, a stop portion **54** of the member **50** which has been stopped by protrusion **64** or the like, can pass after detachment of the housing part **18** so that the member **50** can index one step further. In this further rotational position, the nebulizer **1** is still in its first locked state, i.e., is still locked against further use, in particular against further actuation or tensioning of the drive spring **7**. However, the member **50** may show the next symbol **53**, in particular an arrow pointing upwards, indicating that a new container **3** is connected and/or that a new housing part **18** is connected to the nebulizer **1**. This situation correspondents to the initial situation before first assembly of the nebulizer **1** with the housing part **18** as already described.

[0165] It is noted that the blocking element **8** is preferably blocked against actuation, in particular against release of the holder **6** and drive spring **7** in the first locked state. This actuation locking will also be achieved by the device **48** or member **50**.

[0166] When the housing part **18** and the associated container **3** have been replaced, this is registered by the device **48**, in particular by actuation of the corresponding stop element **61** by means of the protrusion **64**. Then the member **50** indexes one step further and shows the next container number **52**. Then, the lock **57** is reset, i.e., opened or unlocked again. Thus, the nebulizer **1** is unlocked and can be used further with the new container **3**. Simultaneously, the container **3** or housing part **18** is preferably locked again against opening or container replacement, in particular in that the next blocking portion **55** is positioned below retaining element **19** to prevent actuation of the retaining element **19** which is necessary for opening the nebulizer **1**.

[0167] The above sequence can be repeated, i.e., new containers **3** and new housing parts **18** can be used one after the after with the nebulizer **1**, wherein the device **48** or indicator member **50** displays or shows the container number **52** and, preferably, symbols **53** for user guidance, in particular to indicate any necessary container replacement and/or indicating to open and close the nebulizer **1** or the like. The container number **52** relates in particular to the number of containers **3** that have already been used with the nebulizer **1** or still can be used with the nebulizer **1**. In particular, one or more symbols **53** are displayed or shown alternately with the consecutive container numbers **52**. This is realized preferably by a common component, namely indicator member **50**. However, other constructional realizations are possible.

[0168] Further, the display of the container numbers **52** and/or symbols **53** works preferably only mechanically. In particular, the device **48** and/or the lock **57** work only mechanically.

[0169] After a predetermined number of containers **3** have been connected to or with the nebulizer **1**, the nebulizer **1** will be blocked against further container replacement. After using the lastly inserted or connected container **3**, the nebulizer **1** will enter the final locked state, i.e., the second locked state, preferably where the lock **57** or nebulizer **1** is blocked against resetting and/or the nebulizer **1** or housing part **18** is blocked against opening. This second locked state is entered in particular after the predetermined number of operations has been reached or exceeded with the ultimate, current container **3**. Similar to the previous process the counter device **23** or its rider **44** or actuation part **47** actuates the device **48**, in particular the corresponding stop element **61** to allow to index the member **50** one step further into its final rotational position. Thus, the second locked state is entered.

[0170] In the second lock state, the control member **50** cannot be rotated any further. This is realized in the present embodiment in particular in that the bearing portion **67** abuts one protrusion **17***c* of the inner part **17** engaging into one of the recesses **65**. However, other constructional solutions are possible in order to realize the desired rotational stop or blocking for the control member **50** in the final rotational position, i.e., in the second locked state.

[0171] In the second locked state, the device **48** or member **50** does not allow opening of the nebulizer **1** or housing part **18** as it would be in the case in the first locked state. Instead, the member **50** comprises a respectively designed, preferably sufficiently long blocking portion **55** to block the retaining

element **19** further against actuation and, thus, to block the nebulizer **1** against opening and container replacement.

[0172] In the second locked state, the nebulizer **1** can be locked against further actuation, in particular against tensioning of the drive spring **1** and/or rotation of the housing part **18** or inner part **17**. This can be realized by actuating the lock **57**, in particular by flexing portion **59** radially (preferably outwards) by the member **50** or its corresponding control portion **56**. In the second locked state, the nebulizer **1** is preferably locked against any further discharge of fluid **2**, in particular by blocking actuation of the blocking element **8**. This is preferably also realized by device **48**.

[0173] Therefore, the nebulizer **1** cannot be used anymore after the second locked state has been entered. The second locked state is not reversible. In particular, resetting or unlocking of the lock **57** is not possible, but prevented in the second locked state.

[0174] As already outlined above, some general aspects or ideas of the nebulizer **1** according to the preferred embodiment can be summarized as indicated in the following.

[0175] The device **48** preferably comprises only two parts (control member **50** and locking member **58**) or three parts (control member **50**, spring **51** and locking member **58**), but provides multiple functions, in particular displaying of numbers **42** and/or symbols **53** and/or user instructions, locking of the nebulizer **1** against further use, locking of the nebulizer **1** against tensioning, and/or locking of the nebulizer **1** against opening or container replacement.

[0176] The nebulizer **1** may comprise the indicator member **50** for showing numbers, in particular container numbers **52** and alternately symbols **53** indicating container replacement and/or nebulizer opening and/or closing. The indicator member **50** may be moved or rotated stepwise by the force of the spring **51**.

[0177] The indicator member **50** may drive the lock **57** of the nebulizer **1** such that the nebulizer **1** is locked against further use in the first locked state, when he container **3** is replaced, wherein the first locked state is reset by indexing the indicator member **50** and/or resetting the lock **57** if the container **3** and/or housing part **18** have been replaced.

[0178] The indicator member **50** is preferably ring-like.

[0179] The indicator member **50** works or shows the numbers **52** and/or symbols **53** mechanically.

[0180] The nebulizer **1** preferably comprises the lock **57** for locking the nebulizer **1** against further use in the first locked state, in particular when the container **3** is replaced.

[0181] Preferably, the first locked state is reset by resetting the lock **57**, if the container **3** and/or housing part **18** have been replaced. With other words, the lock **57** is preferably resettable and can be used further after container replacement. In particular, an exchange or replacement of the lock **57** is not necessary to reuse the nebulizer **1**.

[0182] The nebulizer **1** preferably comprises the control member **50** for controlling or driving the lock **57**.

[0183] The control member **50** is preferably moved or rotated stepwise by the force of the spring **51**.

[0184] The lock **57** and/or first locked state is preferably blocked against resetting in the second locked state.

[0185] The second locked state is preferably entered when a predetermined number of containers **3** has been used or inserted into the nebulizer **1** and, preferably after a predetermined number of operations has been performed or exceeded with the nebulizer **1** after inserting the last container **3**.

[0186] The control member **50** is preferably ring-shaped.

[0187] Preferably, the control member **50** forms the indicator member or vice versa.

[0188] The control member **50** preferably displays the numbers **52** of containers **3** that have been used or still can be used and/or the symbols **53** indicating containing replacement and/or user guidance or nebulizer handling.

[0189] The control member **50** blocks preferably opening of the nebulizer **1** and/or container replacement until a predetermined number of operations has been reached or exceeded with the current container **3**.

[0190] Preferably, the nebulizer **1** is locked against opening or container replacement, in particular by means of the control member **50**, in the second locked state.

[0191] Preferably, the nebulizer **1** is locked against opening or container replacement, in particular by means of the control member **50**, before the first locked state has been reached.

[0192] Preferably, the lock **57** locks the nebulizer **1** in the first and/or second locked state against conveying fluid **2** into the pressure generator **5** and/or against tensioning of the drive spring **7** of the nebulizer **1** and/or against rotation or turning of the housing part **18** or inner part **17**.

[0193] Preferably, the housing part **18** is replaced each time the container **3** is replaced. In particular, the container **3** is inseparable from the housing part **18** and/or counter device **23** or vice versa.

[0194] The moved apart locking portions **33***b* of the securing device **32** preferably prevent the used and/or detached container **3** from being re-connected to or reused with the nebulizer **1** once more and/or prevent a used or detached housing part **18** from being reconnected to the nebulizer **1** once more.

[0195] Preferably, the housing part **18** can be or is detached or opened for replacing the container **3**.

[0196] Preferably, the securing device **32** is associated to the container **3** preventing a used container **3** from being connected or used with the nebulizer once more.

[0197] FIG. **16** shows in a schematic exploded view a modified embodiment of the nebulizer **1** with a preferred coding of the housing part **18** and of the nebulizer **1**, in particular of the upper part **16** or inner part **17**, preferably by the retaining part **39**, as already been mentioned above. The modified embodiment deals with a preferred realization of the coding.

[0198] In the modified embodiment, the coding of the housing part **18** and, thus, of the container **3** and/or fluid **2**, is realized by at least one insert or coding element **68**, in the present embodiment by two or multiple inserts or coding elements **68**, which are mounted or fixed at or in the housing part **18**.

[0199] In the following, a preferred realization and/or mounting of one or multiple or all coding elements **68** is discussed.

[0200] Preferably, the coding element(s) **68** can be clipped into the housing part **18**. However, other constructional solutions are possible for fixing the coding element(s) **68** at or in the housing part **18**.

[0201] In the present embodiment, the housing part **18** preferably comprises radial shoulders **69** for receiving or holding the coding elements **68**. In particular, the radial shoulders **69** are rib-like. Preferably, the coding element **68** can be received between two spaced shoulders **69**. In particular, the coding element **68** can be pushed axially into the housing part **18**.

[0202] Preferably, the coding element **68** can be arranged at the inner side of the peripheral wall of the housing part **18**. Preferably, the coding element **68** is essentially plate-like

and/or curved for arrangement within the preferably essentially sleeve-like portion of the housing part **18**.

[0203] The coding of the housing part **18** is provided or formed by the one or more coding elements **68**. This coding is associated to the container **3** which is preferably inseparably connected to or with the housing part **18**.

[0204] Further, the nebulizer **1** is also provided with a coding. This coding may be formed by the inner part **17**, the retaining part **39**, the coding portion(s) **63** and/or a key element **70**. Preferably, the key element **70** is ring-like and/or provided with one or more or all coding portion(s) **63**. Preferably, the key element **70**, which is shown in FIG. **16**, forms part of the nebulizer **1** and/or is in particular inseparably mounted or fixable to the nebulizer **1**. Preferably, the key element **70** can be attached to the inner part **17** and/or to the retaining part **39**. Preferably, the key element **70** can be attached to the nebulizer **1** or inner part **17** or retaining part **39** by clipping and/or in any other suitable manner.

[0205] In particular, the key element **70** allows easy coding of the nebulizer **1**.

[0206] Preferably, the key element **70** is inseparable from the nebulizer **1**.

[0207] Preferably, the nebulizer **1** is coded by the peripheral location and/or extension and/or radial extension or dimension, inner or outer contour or the like of the coding portion(s) **63**.

[0208] It is noted that the retaining element **39** and/or the key element **70** can be provided with the coding portion(s) **63**.

[0209] In the illustrated embodiment, the key element **70** can be clipped or attached to the retaining part **39**. For this purpose, the key element **70** preferably comprises at least one or two holding portions **72** which can be axially shifted onto the inner part **17** and/or over the retaining part **39** and/or between radial protrusions, coding portions **63** or the like of the retaining element **39**. In the preferred embodiment, the holding portions **72** are extending essentially in a circumferential direction and/or are relatively rigid and/or support one or more coding portions **63**. Preferably, the key element **70** and/or holding portions **72** are provided with shoulders or noses **73**, preferably extending in circumferential direction and/or located at the circumferential ends of the holding portions **72**, in order to allow fixing or clipping of the key element **70** or holding portions **72** to the nebulizer **1** or inner part **17** or retaining element **39** and/or in between radial protrusions, holding portions **63** or the like of the nebulizer **1**, inner part **17** and/or retaining part **39**. However, other constructional solutions are possible.

[0210] The coding provided by the one or more coding elements **68**, in particular by protrusions and/or ribs **62** and/or indentions and/or grooves **71** of the coding element(s) **68** or the like, is preferably coded by the peripheral location and/or extension and/or radial extension or dimension, inner contour or the like and/or is preferably complementary to the coding provided at the nebulizer **1**, in particular provided by the retaining part **39**, the key element **70** and/or the coding portion(s) **63**, in particular respective protrusions, recesses or the like.

[0211] Only if the codings of the nebulizer **1**, on one hand, and the housing part **18**, on the hand, match can the nebulizer **1** be closed, in particular, by shifting the housing part **18** on the inner part **17**. If the codings do not match, the respective housing part **18** and the associated container **3** cannot be used with the respective nebulizer **1**.

[0212] The possibility to code the nebulizer **1** and/or housing part **18** by means of additional parts, such as the coding elements **68** and/or key element **70**, in particular by attaching or clipping respective parts to the nebulizer **1** and/or housing part **18**, allows in particular a medicament or fluid specific coding in an easy manner and/or allows a specific coding later after producing multiple nebulizers **1** and/or housing parts **18**, in particular independently from production and/or depending on demand.

[0213] As already mentioned, individual features, aspects and/or principles of the embodiments described may also be combined with one another as desired and may be used particularly in the nebulizer according to FIGS. **1** & **5** but also in similar or different nebulizers.

[0214] Unlike freestanding equipment or the like, the proposed nebulizer **1** is preferably designed to be portable, and in particular, is a portable hand-operated device.

[0215] The proposed solution may, however, be used not only in the nebulizers **1** specifically described here but also in other nebulizers or inhalers, e.g., powder inhalers or so-called metered dose inhalers.

[0216] Preferably, the fluid **2** is a liquid, as already mentioned, especially an aqueous pharmaceutical formulation or an ethanolic pharmaceutical formulation. However, it may also be some other pharmaceutical formulation, a suspension or the like.

[0217] According to an alternative embodiment, the fluid **2** may also comprise particles or powder. In this case, instead of the expulsion nozzle **12**, some other kind of supply device may be provided, especially an expulsion opening (not shown) or a supply channel (not shown) for supplying the fluid to or powder or the like into the mouthpiece **13**. The optional air supply opening **15** then serves to supply ambient air preferably in parallel so as to general or allow an airflow through the mouthpiece **13** with a sufficient volume for breathing in or inhaling.

[0218] If necessary, the fluid **2** may also be atomized by means of a propellant gas.

[0219] Preferred ingredients and/or formulations of the preferably medicinal fluid **2** are listed, in particular, in WO 2009/115200 A1 and commonly owned, corresponding U.S. Patent Application Publication 2009/0235924, which is incorporated herewith by reference. In particular, these may be aqueous or non-aqueous solutions, mixtures, formulations containing ethanol or free from solvent, or the like.

What is claimed is:

1. Nebulizer for a fluid, comprising:

a replaceable container containing a fluid,

a device for at least one of counting the number of containers that have been used and the number of containers that still can be used, and

an indicator member for displaying said number,

wherein the indicator member displays said number a number and displays a symbol indicating container replacement.

2. Nebulizer according to claim **1**, further comprising a spring positioned to act on the indicator member, wherein the indicator member is moved or rotated stepwise by the force of the spring.

3. Nebulizer according to claim **1**, further comprising a lock for preventing operation of the nebulizer, wherein the indicator member drives the lock such that the nebulizer is locked against further use in a first locked state when the container needs to be replaced, and wherein the first locked

state is reset by at least one of indexing the indicator member and resetting the lock when the container has been replaced.

4. Nebulizer according to claim **1**, wherein the indicator member is adapted to show different or consecutive numbers alternately with a symbol indicating container replacement.

5. Nebulizer according to claim **1**, wherein indicator member is adapted to show different or consecutive numbers alternately with a sequence of at least two symbols, wherein a first symbol of the sequence indicates opening of the nebulizer for container replacement and another symbol of the sequence indicates closing of the nebulizer to complete container replacement.

6. Nebulizer according to claim **1**, wherein the indicator member is ring-shaped.

7. Nebulizer according to claim **1**, wherein the indicator member is mechanically operated for showing said number and symbol.

8. Nebulizer according to claim **1**, wherein the indicator member is adapted to show a special end symbol when the nebulizer cannot be used anymore or cannot be used with a further container.

9. Nebulizer according to claim **1**, further comprising a housing part which can be opened or separated for replacing the container, and wherein the container is inseparable from the housing part, requiring the housing part to be replaced each time the container is replaced.

10. Nebulizer according to claim **1**, wherein the nebulizer is constructed as an inhaler for a medical aerosol treatment.

11. Nebulizer according to claim **1**, wherein the indicator only mechanically operable.

12. Nebulizer for a fluid, comprising:

a replaceable container containing a fluid,

a device for counting the number of containers that have been used or still can be used,

an indicator member displaying said number, and

a spring member positioned to act on the indicator member,

wherein the indicator member is moved or rotated stepwise by the force of the spring.

13. Nebulizer according to claim **12**, further comprising a lock for preventing operation of the nebulizer, wherein the indicator member drives the lock such that the nebulizer is locked against further use in a first locked state when the container needs to be replaced, and wherein the first locked state is reset by at least one of indexing the indicator member and resetting the lock when the container has been replaced.

14. Nebulizer according to claim **12**, wherein the indicator member is ring-shaped.

15. Nebulizer for a fluid, comprising:

a replaceable container containing the fluid,

a device for counting the number of containers that have been used or still can be used,

an indicator member displaying said number, and

a lock for preventing operation of the nebulizer,

wherein the indicator member drives the lock such that the nebulizer is locked against further use in a first locked state when the container needs to be replaced, and wherein the first locked state is resettable by at least one of indexing the indicator member and resetting the lock when the container has been replaced.

16. Nebulizer according to claim **15**, wherein the indicator member is ring-shaped.

17. Nebulizer for a fluid, comprising:

a replaceable container containing a fluid,

a lock for locking the nebulizer against further use in a first locked state when a container needs to be replaced, the first locked state being resettable by resetting the lock when the container has been replaced,

a control member for controlling or driving the lock, and

a spring adapted for moving or rotating the control member in stepwise manner.

18. Nebulizer according to claim **17**, wherein the lock is locked against resetting in a second locked state once a predetermined number of containers has been used or inserted into the nebulizer.

19. Nebulizer according to claim **18**, wherein the nebulizer is locked against opening or container replacement by means of the control member in the second locked state.

20. Nebulizer according to claim **17**, wherein the nebulizer is locked against opening or container replacement by means of the control member before the first locked state has been reached.

21. Nebulizer according to claim **17**, wherein the lock locks the nebulizer in the first locked state against at least one of conveying fluid into a pressure generator, against tensioning of an energy store and a drive spring.

22. Nebulizer according to claim **17**, wherein the control member is ring-shaped

23. Nebulizer for a fluid, comprising:

a replaceable container containing a fluid,

a lock for locking the nebulizer against further use in a first locked state when the container needs to be replaced, the first locked state being resettable by resetting the lock when the container has been replaced, and

a control member for controlling or driving the lock,

wherein the lock is blocked against resetting when in a second locked state once a predetermined number of containers has been used or inserted into the nebulizer.

24. Nebulizer according to claim **23**, wherein the control member is ring-shaped.

25. Nebulizer according to claim **23**, wherein the control member forms an indicator member for displaying at least one of the number of containers that have been used, the number of containers that still can be used, and a symbol indicating the need for container replacement.

26. Nebulizer according to claim **25**, wherein the indicator member shows a symbol indicating the need for container replacement.

27. Nebulizer according to claim **23**, wherein the control member is adapted to block at least one of opening of the nebulizer and container replacement until a predetermined number of operations has been reached or exceeded.

28. Nebulizer according to claim **23**, wherein the control member is adapted to block at least one of opening of the nebulizer and container replacement until a predetermined number of operations has been reached or exceeded.

29. Nebulizer according to claim **23**, wherein the nebulizer is locked against opening or container replacement by means of the control member before the first locked state has been reached.

30. Nebulizer according to claim **23**, wherein the nebulizer is locked against opening or container replacement by means of the control member in the second locked state.

31. Nebulizer according to claim **23**, wherein the lock locks the nebulizer in the first locked state against at least one of

conveying fluid into a pressure generator tensioning of an energy store and tensioning of a drive spring of the nebulizer.

32. Nebulizer according to claim **31**, further comprising a securing device preventing a used container from being connected to the nebulizer.

33. Nebulizer according to claim **30**, wherein the securing device comprises locking portions on the which move radially or are force apart after the used container is detached from the nebulizer.

34. Nebulizer for a fluid, comprising:

a replaceable container containing a fluid, and

a housing part which can be detached or opened for replacing the container, and

a securing device associated with the container for preventing a used container from being connected to the nebulizer,

wherein the securing device comprises locking portions on the container that are moveable radially outwards at least after the used container has been detached from the nebulizer such that the used container cannot be reconnected to the nebulizer.

35. Nebulizer according to claim **34**, wherein the locking portions are arm-shaped.

36. Nebulizer according to claim **34**, wherein the locking portions are at least partly biased in a radial direction.

37. Nebulizer according to claim **34**, wherein the locking portions are held against moving radially outward by a securing part.

38. Nebulizer according to claim **37**, wherein the securing part is ring-shaped.

39. Nebulizer according to claim **38**, wherein the securing part is movable into a position to free the locking portions when at least one of the container is inserted for the first time and when completely closing the nebulizer or a housing part thereof.

40. Nebulizer according to claim **34**, wherein the securing device is formed of a stamped and unitary part.

41. Nebulizer according to claim **34**, wherein the locking portions are made of metal.

42. Nebulizer according to claim **34**, wherein the securing device is adapted to at least one of prevent detachment of the container from the housing part and prevent reconnection of the housing part to the nebulizer when the housing part has been previously connected.

43. Nebulizer according to claim **34**, wherein the securing device is adapted to inseparably hold the container in the housing part, and wherein the container is moveable back and forth within the nebulizer relative to the housing part during at least one of conveying of the fluid, pressure generation and nebulization.

44. Nebulizer according to claim **34**, wherein the securing device forms a transportation lock for holding the container fixed in the nebulizer in a delivery state, and wherein the transportation lock is openable during or after connection of the container or housing part to the nebulizer.

45. Nebulizer according to claim **34**, further comprising a counter device located at the housing part.

46. Nebulizer according to claim **45**, wherein the counter device is adapted to actuate or trigger at least one of locking of the nebulizer against at least one further use, movement or rotation of the indicator or control member, and actuation of a locking member.

47. Nebulizer according to claim **34**, wherein the housing part is provided with a coding such that the housing part is mountable to the nebulizer only if the coding matches to a complementary coding arranged at the nebulizer.

48. Nebulizer according to claim **47**, wherein the coding is formed at the housing part by at least one coding element that is attached to the housing part by at least one of clipping and inserting.

49. Nebulizer for a fluid, comprising:

a replaceable container containing the fluid, and

a housing part which inseparably holds the container and which is attachable to an upper housing part for connecting the container to the nebulizer,

wherein the housing part comprises a coding such that the housing part can be attached to an upper housing part the nebulizer for connecting the container to the nebulizer only if the coding on the housing matches a coding formed the upper part of the nebulizer,

wherein the coding is formed at the housing part by at least one coding element that is attached to the housing part by inserting, and

wherein the coding of the housing part is coded by the peripheral location thereof.

50. Nebulizer according to claim **49**, wherein the coding is formed by a retaining part or key element provided with one or more coding portions.

51. Nebulizer according to claim **50**, wherein the retaining part or key element is connected to the nebulizer by at least one of clipping and inserting.

52. Nebulizer according to claim **49**, further comprising a drive spring in an inner part and wherein the drive spring is held by a retaining part.

53. Nebulizer according to claim **50**, wherein the retaining part or key element is provided with at least two coding portions extending radially on opposite sides or in opposite directions.

54. Nebulizer according to claim **52**, wherein the retaining part or key element is inseparable from the inner part.

55. Nebulizer according to claim **49**, wherein the at least one coding element is axially pushed into the housing part.

56. Nebulizer according to claim **49**, wherein the at least one coding element is arranged at an inner side of a peripheral wall of the housing part.

57. Nebulizer according to claim **49**, wherein the at least one coding element is essentially plate-shaped or curved for arrangement within an essentially sleeve-shaped portion of the housing part.

58. Nebulizer according to claim **49**, wherein the at least one coding element is inseparable from the housing part.

59. Nebulizer according to claim **49**, wherein the at least one coding element is comprises at least one of protrusions, ribs, indentions or grooves.

60. Nebulizer according to claim **49**, wherein the at least one coding element is comprises at least one groove.

61. Nebulizer according to claim **50**, wherein the housing part comprises means for holding or fixing the at least one coding element.

62. Nebulizer according to claim **61**, wherein the means for holding comprises radial shoulders.

63. Nebulizer according to claim **49**, wherein the housing part comprises rib-shaped radial shoulders for holding or fixing the at least one coding element.

64. Nebulizer according to claim **63**, wherein each coding element is received between two spaced shoulders.

65. Nebulizer according to claim **49**, wherein the at least one coding element is attached to the housing part by clipping.

* * * * *

US005660167A

United States Patent [19]

Ryder

[11] Patent Number: 5,660,167

[45] Date of Patent: Aug. 26, 1997

[54] **DUAL NOZZLE NEBULIZER**

[76] Inventor: **Steven L. Ryder**, 1334 W. Woodcrest Ave., Fullerton, Calif. 92633

[21] Appl. No.: **460,830**

[22] Filed: **Jun. 5, 1995**

Related U.S. Application Data

[63] Continuation of Ser. No. 109,658, Aug. 20, 1993, abandoned, which is a continuation-in-part of Ser. No. 864,483, Apr. 7, 1992, abandoned, which is a continuation-in-part of Ser. No. 650,451, Feb. 4, 1991, abandoned.

[51] **Int. Cl.**[6] **A61M 11/00**

[52] **U.S. Cl.** **128/200.21**; 128/200.14; 128/203.12

[58] **Field of Search** 128/200.21, 200.14, 128/200.18, 203.12, 203.25, 205.11, 205.24; 239/338

[56] **References Cited**

U.S. PATENT DOCUMENTS

1,294,246	2/1919	Dorment	239/338
2,993,652	7/1961	Curry .	
3,525,476	8/1970	Boling	239/338
3,724,454	4/1973	Brown .	
3,809,080	5/1974	Deaton .	
3,836,079	9/1974	Huston	239/74
3,864,326	2/1975	Babington .	
4,007,238	2/1977	Glenn .	
4,054,622	10/1977	Lester	128/200.18 X
4,150,071	4/1979	Pecina .	
4,190,046	2/1980	Virag .	
4,195,044	3/1980	Miller .	
4,206,160	6/1980	Suddendorf	239/338 X
4,231,973	11/1980	Young	239/338 X
4,243,396	1/1981	Cronenberg	128/203.16 X
4,560,519	12/1985	Cerny .	
4,595,002	6/1986	Michaels	128/200.21
4,612,926	9/1986	Bolarsky	128/200.21
4,629,590	12/1986	Bagwell .	
4,674,491	6/1987	Brugger et al. .	
4,911,157	3/1990	Miller .	
5,241,954	9/1993	Glenn .	

FOREIGN PATENT DOCUMENTS

513052	10/1928	Germany	239/338
879737	10/1961	United Kingdom .	

Primary Examiner—V. Millin
Assistant Examiner—William J. Deane, Jr.
Attorney, Agent, or Firm—Swanson & Bratschun, LLC

[57] **ABSTRACT**

A device for entraining a liquid into a carrier gas comprises a hollow cylindrical body having an inlet chamber separated from the interior of the body by a partition. A first nozzle and second nozzle are each supported in the partition and interconnect the inlet chamber and the body interior. A passageway connects a reservoir to the first nozzle so that a first stream of carrier gas flowing through the first nozzle aspirates a liquid within the reservoir and entrains the liquid therein. A second stream of carrier gas flows through the second nozzle and mixes with the first steam in the interior of the body, thereby forming a resultant carrier gas mixture that is lower in liquid concentration than obtainable by having the first nozzle alone. An air inlet opening with an adjustable cover communicates between the interior of the body and its exterior. The air inlet opening is located adjacent the discharge ends of the nozzles to draw air into the resultant carrier gas mixture to dilute the concentration of carrier gas. The enclosure is V-shaped, the reservoir being a separable container that attaches thereto and, when empty, may be detached and replaced with a new reservoir. A drain opening is formed in the enclosure at its lowest point and aligns with a vent opening of the container when the container is fully engaged with the enclosure, thereby maintaining a constant pressure over the liquid in the container and allowing condensed liquid to drain back into the container.

9 Claims, 2 Drawing Sheets

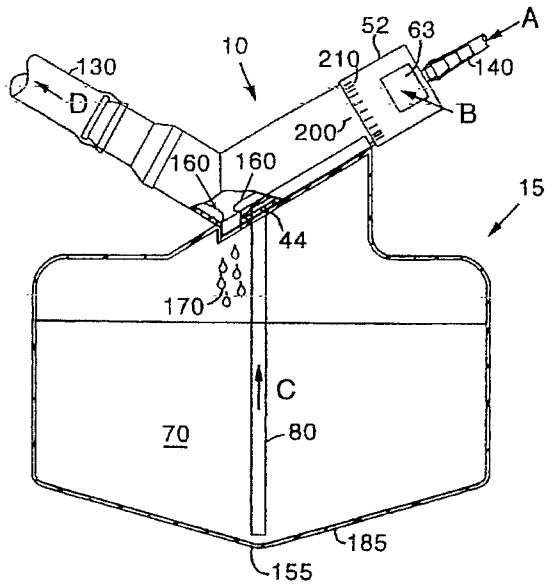

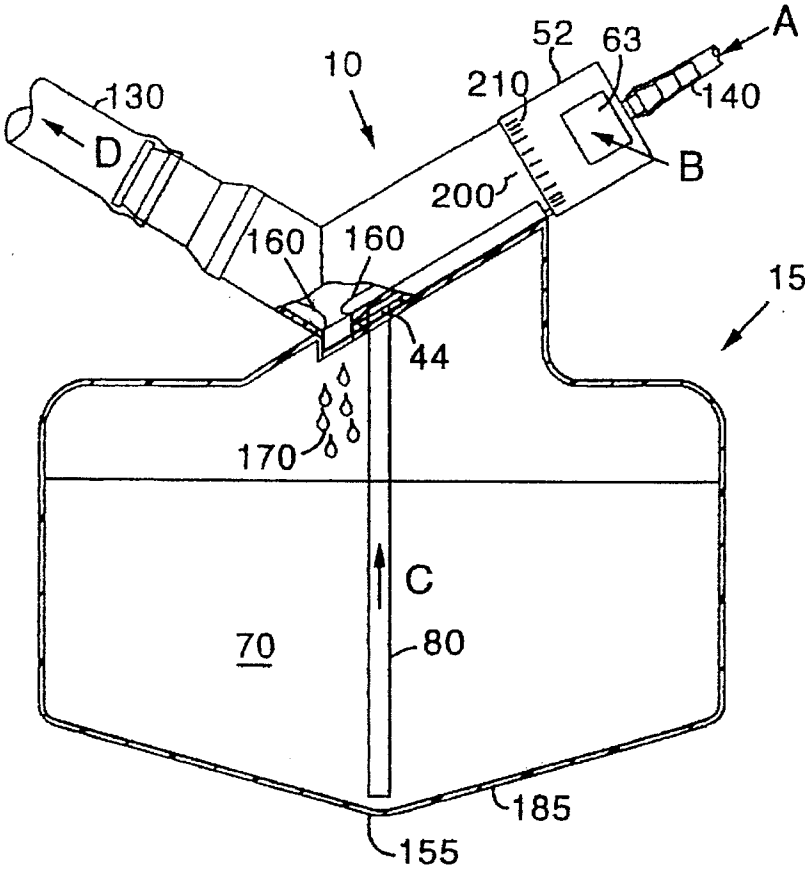
A
52
63
10
210
140
130
D
B
200
160
160
15
44
170
C
70
80
185
155

FIG. 1

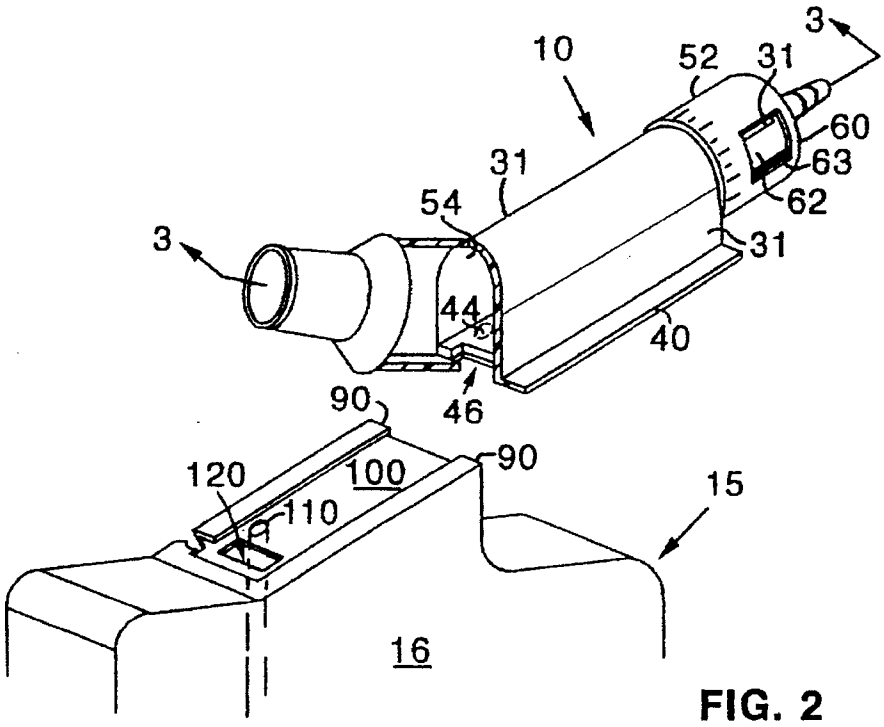
3
10
52
31
60
63
31
62
54
3
31
44
40
46
90
90
120
100
110
15
16

FIG. 2

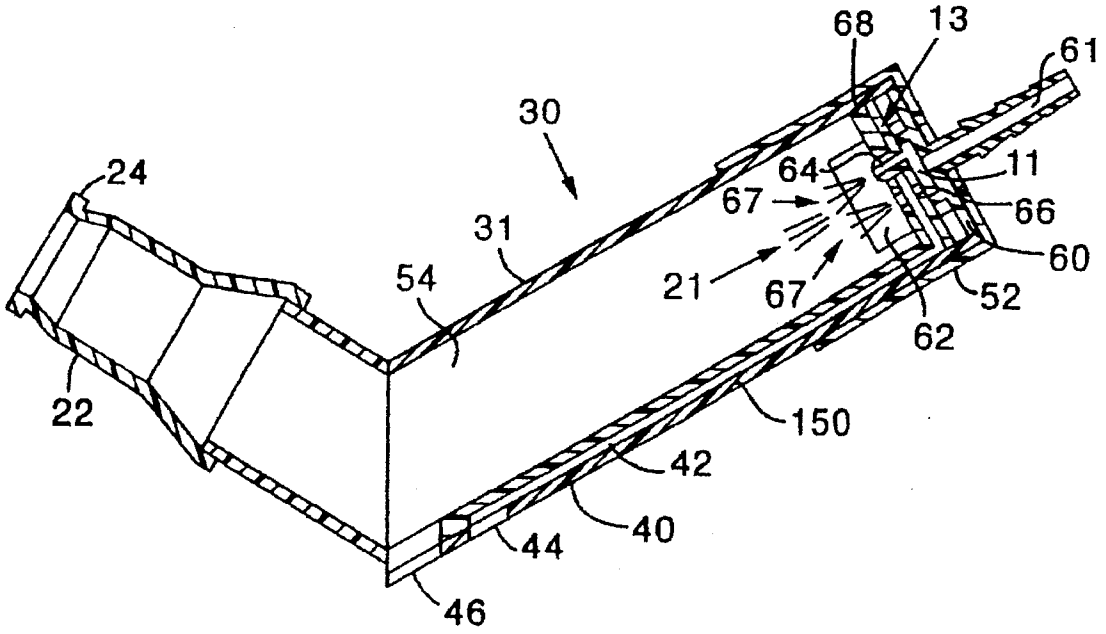
68
13
61
30
24
64
11
67
66
31
60
54
21
67
52
62
22
150
42
40
44
46

FIG. 3

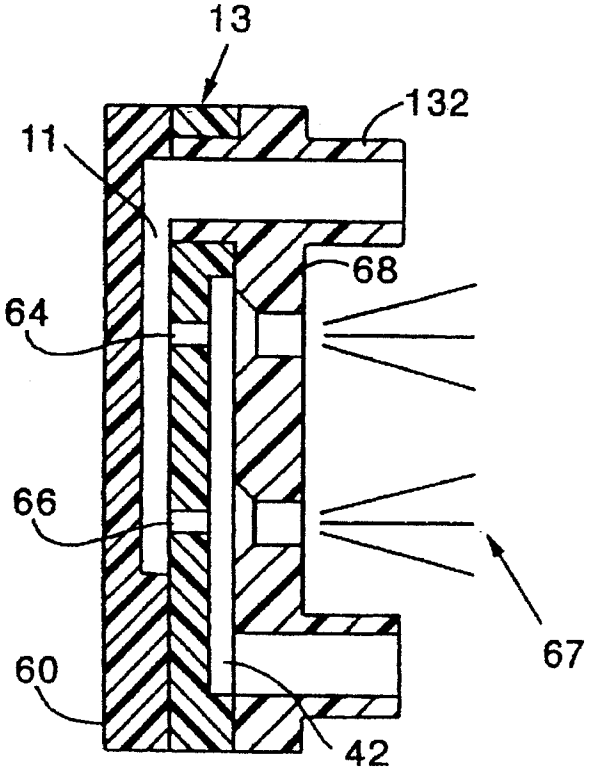
13
132
11
68
64
66
67
60
42

FIG. 4

DUAL NOZZLE NEBULIZER

REFERENCE TO RELATED APPLICATIONS

This is a continuation of application(s) Ser. No. 08/109,658 filed on Aug. 20, 1993, now abandoned, which is a continuation-in-part of application Ser. No. 07/864,483, which was filed Apr. 7, 1992, now abandoned, which was a continuation-in-part of application Ser. No. 650,451, filed Feb. 4, 1991, now abandoned.

FIELD OF THE INVENTION

This invention relates to a device foe atomizing a liquid and more particularly to a medical nebulizers for atomizing a liquid within a flow of pressurized carrier gas.

BACKGROUND OF THE INVENTION

Nebulizers used in medical applications typically entrain a medical liquid or water into a high-velocity flow of pressurized carrier gas, such as oxygen, in order to atomize the liquid into a fine mist or aerosol within the carrier gas. The atomized liquid is entrained and carried in the gas stream through a delivery tube to a patient some distance away for inhalation.

Currently available nebulizers include a housing with a carrier gas input nozzle, a reservoir opening and an output opening. A relatively high velocity flow of carrier gas enters the housing through the carrier gas input nozzle. A reservoir port is located within the housing at the output side of the nozzle, the flow of carrier gas being directed across and slightly towards the reservoir port. Notwithstanding the slightly increased "back pressure" within the enclosure that this non-linear carrier gas flow creates, considerable liquid is still drawn into the flow of carrier gas through the reservoir port by virtue of the relatively low pressure created within the housing by the high velocity flow of carrier gas. The liquid is subsequently atomized into a fine mist and the entrained atomized liquid is carried in the carrier gas stream to the patient.

An additional feature found on many currently available nebulizers is an adjustable air inlet opening in the housing adjacent the carrier gas input nozzle. This opening allows air to be drawn into the housing to be mixed with the carrier gas stream in addition to the liquid to reduce the concentration of carrier gas in the resultant mixture. As the most commonly used carrier gas in medical nebulizers is oxygen and since many patients, such as those suffering from emphysema, cannot or need not be exposed to high concentrations of oxygen, this feature often eliminates a need to initially dilute the oxygen carrier gas with pressurized air. As a result, complicated air pressurizing and mixing apparatus need not be used.

While nebulizers have improved significantly over the years, several significant drawbacks still exist with current nebulizer designs. For example, patients with emphysema are quite sensitive to even moderate concentrations of oxygen inhalation. Air has an approximate oxygen concentration of 21%. With the adjustable air inlet opening, current nebulizer designs produce a minimum oxygen concentration of about 28% in the resultant inhalation mixture, and more frequently produce a minimum oxygen concentration of 30%. Oxygen sensitive patients require an even lower minimum oxygen concentration in the inhalation mixture and, consequently, complicated air pressurizing and mixing apparatus are necessary in order to mix air with the pressurized oxygen before the carrier gas enters the nebulizer. This introduces unwanted complexity and cost to the patient undergoing treatment.

Another significant drawback to current nebulizer design is that the nebulizer is designed to attach to a carrier gas valve fixture on the wall in the patient's room thus making movement of the nebulizer set-up difficult and requiring that the patient be disconnected while being transported.

Another disadvantage with current nebulizer design is the relatively long delivery tube between the nebulizer at the fixed wall carrier gas valve and the patient. this results in low spots in the delivery tube where liquid condensation from the resultant carrier gas mixture accumulates. This condensation must be constantly monitored to prevent occlusion of the tubing resulting in possible loss of oxygen and aerosol flow to the patient. Moreover such condensation in the tubing results in the loss of medication and leads to excessive use of medication.

Accordingly there is a need for a portable nebulizer that entrains a greater amount of air into the inhalation mixture thus controllably allowing for decrease of the concentration of carrier gas and liquid medication and that reduces the amount of liquid waste and the need for constant monitoring of the nebulizer set-up.

SUMMARY OF THE INVENTION

The nebulizer of the present invention comprises a hollow body having an interior and an inlet chamber. The inlet chamber communicates with a source of pressurized carrier gas. At least a pair of nozzles communicate between the interior and the inlet chamber for leading the carrier gas through both of the nozzles from the inlet chamber to the interior of the outlet chamber. At least one of the nozzles is connected by passage means to a source of liquid to be entrained in the carrier gas by the flow of carrier gas through the nozzle. An adjustable air inlet is located adjacent the outlets of the nozzles which provides for controllably adjusting the quantity of air which is drawn into the housing responsive to the Venturi effect of the flow of the carrier gas at the nozzle openings into the outlet chamber.

By introducing the carrier gas into the outlet chamber through more than one nozzle, the pressure in the body is reduced more than in the case of nebulizers of conventional design. This results in the entrainment of more air through the air inlet and with the air inlet fully open the concentration of the carrier gas in the stream exiting the device is reduced to about 26% of the mixture of air and carrier gas. By the same token, while reducing the concentration of carrier gas without reducing the total volume of carrier gas used, the total flow of the gas mixture to the patient is increased.

In another embodiment of the invention, the device incorporates a pair of nozzles both of which are connected to the source of liquid as well as communicating with the carrier gas.

In a preferred embodiment of the invention, the body of the device is tubular and is V-shaped to define low point for the collection of condensation. A drain is provided to remove the condensed liquid from the interior of the device and preferably the drain communicates with the source of liquid for returning the condensed liquid for reuse. The V-shape permits the device to be attached directly to the patient's bed frame or rail and eliminates the need for a separate liquid drainage bag.

DESCRIPTION OF THE DRAWINGS

FIG. 1 is a left side elevation view if the invention, illustrating a reservoir container attached to an enclosure of the invention and a partial cut-away view of the enclosure;

FIG. 2 is a perspective illustration of the invention, illustrating the reservoir container detached from the enclosure of the invention;

FIG. 3 is a cross sectional view of the invention taken, generally along lines 3—3 of FIG. 2; and

FIG. 4 is a sectional view, partially broken away for compactness of illustration, of an embodiment of the invention where all nozzles are in communication with a source of liquid.

DESCRIPTION OF THE INVENTION

FIG. 1–3 illustrate a device **10** for entraining a liquid **70** into a carrier gas **61**. A hollow, cylindrical body **30**, preferably V-shaped, formed of durable plastic material, has top and side walls **31**, an end wall **60** and a bottom wall **150**, which cooperate to define an interior **54**. The interior **54** is open at the opposite end **24**. The open end **24** and the end wall **60** are adapted for connection of a tubulation **140,130** for ingress A (FIG. **1**) of the carrier gas **61** and for the egress D (FIG. **1**) of a dilute stream of carrier and entrained liquid. A partition **13** (FIG. **3**) is spaced from the end wall **60** to define an inlet chamber **11**. A first nozzle **66** and a second nozzle **64**, each supported by the partition **13**, provide fluid communication from the inlet chamber **11** and discharge into the interior **54**. Both of the nozzles **66** and **64** serve to transfer a stream **67** of the carrier gas from the inlet chamber **11** to the interior **54** of the body **30**. A passageway **42** connects the first nozzle **66** to a reservoir **15** containing the liquid **70** so that the stream **67** of carrier gas flowing through the first nozzle **66** causes the aspiration of the liquid **70** into the first nozzle **66** and entrains the liquid **70** into the stream **67** of the carrier gas flowing therethrough. The stream **67** of the carrier gas flowing through the nozzle **64** is combined in the interior **54** of the body **30** with the stream carrying entrained liquid from the nozzle **66**.

It will be understood that the invention is not limited to two nozzles but may employ any number of nozzles as long as at least the first nozzle **66** is interconnected with the reservoir **15** for entrainment of the liquid **70**.

An opening **62** in the wall **31** adjacent the end wall **60** provides communication between the interior **54** at the discharge outlet of the nozzles **64, 66** and the exterior of the body **30** for aspiration B (FIG. **1**) of air for mixing with each stream **67** of carrier gas. A rotatable closure **52** covers the end portion of the body adjacent the end wall **60** and the opening **62**. The closure **52** is provided with a corresponding opening **63** which can be aligned with the opening **62**. Preferably, the closure **52** has formed therein registration marks **210** for aligning with a registration mark **200** on the body **30** to aid in aligning the corresponding openings **62** and **63** for control of the quantity of air drawn into the interior **54**, and hence provides control over the dilution of the carrier gas and entrained liquid in the resultant gas mixture flowing out of the device **10**.

Preferably, the device **10** is separable from the reservoir **15**. A top surface **100** of the reservoir **15** has L-shaped members **90** adapted to slidably receive extensions **40** of the bottom wall **150** of the interior **54** for removably connecting the interior **54** and the reservoir **15**. The reservoir **15** may be discarded when empty and replaced by a new reservoir **15** containing the liquid **70**. The separable reservoir **15** has an enclosed space **16** for storing the liquid **70**. an outlet opening **110** for withdrawing the liquid **70** from the bottom of the enclosed space **16** by suction C (FIG. **1**) through suction tube **80** connected thereto, a vent **120** for maintaining constant pressure above the liquid **70**, and an attachment means **90** for attaching to a securing means **40** of the interior **54**. A bottom wall **150** of the reservoir **15** is sloped such that a low point **155** is formed adjacent to the suction tube **80** to enable continuous suction until most of the liquid **70** has been aspirated. During manufacture of the reservoir **15**, a thin plastic seal, not shown, may be used to form an air-tight seal on the top surface **100** of the reservoir **15** for sterilization purposes, such thin plastic seal being easily peeled off before use.

Preferably the interior **54** has a drain opening **46** therein which, when the reservoir **15** is attached to the interior **54**, aligns with the vent **120** of the reservoir **15** so that condensed liquid **160, 170** will return to the reservoir **15** if the liquid **70** condenses out of the carrier gas plus liquid plus air mixture **21**, and so that a constant pressure will be maintained over the liquid **70** in the reservoir **15**, facilitating the removal of the liquid **15**.

Referring to FIG. **4** where like reference numbers designate like parts, there is illustrated another embodiment of the invention in which liquid is by both of the nozzles **64** and **66**. As shown, the partition **13** defines the inlet chamber **11** as described in connection with FIG. **1**. The carrier gas enters the inlet chamber **11** through a tube **132** which communicates with a source of carrier gas (not shown). A passageway **42** extends through the partition for communication with the bore of both of the nozzles **64** and **66**. The stream **67** of carrier gas through the nozzles causes aspiration of the liquid **70** into both nozzles and entrains the liquid into the stream flowing through both nozzles.

In the preferred mode of the invention, the device **10** is suspended by support means, not shown, to a patient3 s bed. at a lower level then the patient, thereby ensuring that any liquid **160** that is condensed within tube **130** will flow downwardly, through the drain opening **46**, and into the reservoir **15** for recycling. In addition, the interior **54** has a liquid inlet opening **44** which, when the reservoir **15** is attached to the interior **54**, aligns with the outlet opening **110** of the reservoir **15** so that the liquid **70** may be drawn from the enclosed space **16** into the suction tube **80**, through the outlet opening **110** of the reservoir **15** into the liquid inlet opening **44** of the interior **54**, into the passageway **42**, and subsequently into the first nozzle **66** so as to be entrained into the stream **67** of the carrier gas within the first nozzle **66**.

While the invention has been described with reference to a preferred embodiment, it is to be clearly understood by those skilled in the art that the invention is not limited thereto. For example, such nebulizer means may be useful in non-medical applications such as the atomization of other liquids. Thus, the scope of the invention is to be interpreted only in conjunction with the appended claims.

Having described the invention I claim:

1. A device for entraining a liquid into a carrier gas, comprising:

a. a hollow cylindrical body having walls including an end wall which cooperate to define an interior, an open end of said body opposite the end wall, and a partition spaced apart from the end wall cooperating with the end wall to define an inlet chamber;

b. means for connecting the inlet chamber to a source of carrier gas;

c. at least a pair of nozzle bores extending through the partition, one end of each nozzle bore opening to the inlet chamber and an opposite discharge end opening to the interior of said body to carry a stream of said carrier gas through each said nozzle bore for discharge into the interior;

d. means for communicating a source of liquid to be aspirated with at least one of the nozzle bores for aspiration of the liquid;

e. an opening in a wall of the body adjacent the discharge end of the nozzle bores providing communication from the exterior to the interior of said body, a rotatable closure covering an end portion of the body adjacent the end wall and the opening, the closure being provided with a corresponding opening for alignment with the opening and for intermediate positions with the corresponding opening out of alignment with the opening in said body, the opening being situated so that a carrier gas stream exiting the nozzle bores draws exterior air through the opening in the body when the opening is at least partially aligned with the corresponding opening of the closure to dilute the carrier gas, the carrier gas streams being substantially unobstructed as they enter the interior so as to minimize reduction of their velocity in proximity to the opening.

2. The device of claim **1** wherein said means for connection to a source of a liquid to be aspirated comprises a reservoir consisting of a separable container, a top surface of the container being adapted for mounting of said body thereon and a passageway in said body communicating between the reservoir and the bore of at least one of the nozzles.

3. A device containing a liquid for aspiration comprising a hollow body and a reservoir, said reservoir having an enclosed space including a bottom for storing said liquid, an outlet opening for withdrawing said liquid from the bottom of the enclosed space by a suction tube, a vent for maintaining constant pressure above the liquid, and a means for attachment of the reservoir to the hollow body, the hollow body formed as a cylindrical shell having an interior end defining opposing open ends, each said open end formed as a fitting for attachment of a tubulation thereto, the shell supporting a partition adjacent one end to define an inlet chamber adjacent said one end, the partition having a first and a second nozzle, each nozzle having a bore with a first discharge end which opens to the interior of the body and a second opposite end which opens to the inlet chamber for communication between the inlet chamber and the interior of the body, a line extending from the reservoir and opening to the bore of the first nozzle, the shell having a drain communicating with the reservoir and an air inlet opening between the interior of the shell and an exterior of the shell adjacent the discharge end of the nozzles, an adjustable closure for the air inlet movable to positions covering portions of the air inlet, the exterior of the shell having means for cooperation with the attachment means of the reservoir for securing the reservoir to the body so that the drain opening is aligned with the vent of the reservoir, whereby the injection of the carrier gas into the inlet chamber through one of said open ends forces a first stream of carrier gas through the first nozzle causing the entrainment of the liquid delivered to the bore of the first nozzle by reduced pressure in the line and a second stream having no entrainment of the liquid or other obstruction as it exits the second nozzle, the first and second streams and outside air mixing in the interior of the body.

4. The device of claim **1** wherein the bores of at least a pair of the nozzles are in communication with a source of a liquid for entrainment and aspiration in the stream of carrier gas in said nozzles.

5. A device for entraining a liquid into a carrier gas comprising:

a body having a side wall, a closed end and an open end defining an interior wall, the body further including a body opening in the side wall between the opened end and closed ends for admitting air into the body interior;

a first partition in the housing interior proximate the closed end defining an inlet chamber between the closed end and the first partition;

a second partition in the housing interior proximate the first partition defining a liquid delivery passageway between first and second partitions and a mixing chamber between the second partition, the side wall and the open end of the housing;

the first partition including at least two primary nozzles providing fluid communication between the inlet chamber and the mixing chamber, at least one of the primary nozzles extending between the inlet chamber and the liquid delivery passageway, and the second partition including a secondary nozzle axially aligned with each primary nozzle which extends between the inlet chamber and the liquid delivery channel;

means for connecting the inlet chamber to a source of carrier gas; and

means for connecting the liquid delivery channel to a source of liquid to be aspirated.

6. The device of claim **5** further comprising a rotatable closure covering the body and the body opening, the rotatable closure having a closure opening which is rotatable into and out of alignment with the body opening to control the amount of exterior air drawn through the body opening and thereby the extent to which the carrier gas streams are diluted by the exterior air.

7. The device of claim **6** wherein at least one of the carrier gas streams is unobstructed until it passes the body opening.

8. The device of claim **7** wherein the carrier gas streams are at a velocity sufficient to draw in a volume of exterior air to provide for carrier gas concentrations of between about 26% and 100% as the closure opening is brought into and out of alignment with the body opening.

9. A device for entraining a liquid into a carrier gas, comprising:

a. a hollow cylindrical body having walls including an end wall which cooperate to define an interior, an open end of said body opposite the end wall, and a partition spaced apart from the end wall cooperating with the end wall to define an inlet chamber:

b. means for connection of the inlet chamber to a source of carrier gas;

c. means for connection to a source of a liquid to be aspirated;

d. at least a pair of nozzles, each nozzle having a bore extending through the partition, one end of each nozzle bore opening to the inlet chamber and a second opposite discharge end opening to the interior of said body to carry a stream of said carrier gas through each said nozzle for discharge into the interior without obstruction to said stream of said carrier gas in said interior, the bore of at least one of the nozzles being in liquid communication with said means for connection to a source of liquid to be aspirated for entraining the liquid to be aspirated in a carrier gas stream;

e. an opening in a wall of the body adjacent the discharge end of the nozzles providing communication from the exterior to the interior of said body, the opening being positioned to provide a draw of exterior air through the opening for mixing the carrier gas stream and entrained liquid with the exterior air in the body interior to dilute the carrier gas; and

f. a closure covering an end portion of the body adjacent the end wall and the opening, the closure being provided with a corresponding opening for alignment with the opening and for intermediate positions with the corresponding opening out of alignment with the opening in said body, the closure controlling the amount of exterior air entering the interior to vary the concentration of carrier gas.

* * * * *