SUPERINTENDENCIA DE INDUSTRIA Y COMERCIO

RAD: 13-233021- -2 **FECHA**: 2015-04-09 13:57:06
DEP: 2020 DIRECCION DE NUEVAS CREACIONES **EVE:** 378 FASE NACIONAL INCLUIDO CAPITULO I
TRA: 11 PCT-PATENTE DE INVENCION CAPITULOS I Y II **FOLIOS**: 3
ACT: 430 REQUERSOLICITA

DIRECCIÓN DE NUEVAS CREACIONES

2020
Bogotá, D.C.,

Abogado(a)/Señor(a)
JUANITA ACOSTA GÓMEZ

Asunto: Radicación: 13-233021- -2
Trámite: 11
Evento: 378
Actuación: 430
Oficio: 3502
Folios: 3

Patente de Invención	X			Patente de Modelo de Utilidad	
Vía Nacional					
Vía PCT (Fase Nacional)	X	Capítulo I	X	Capítulo II	
No. Solicitud Internacional	PCT/EP2012/053680				
Fecha de Presentación Internacional	02/03/2012				

Como resultado del examen de fondo realizado, con fundamento en el Artículo 45 de la Decisión 486 de la Comisión de la Comunidad Andina, se comunica:

1. Documentos estudiados

Descripción:	Rad. N° 13-233021-00000-0000	01/Octubre/2013
Reivindicaciones:	Rad. N° 13-233021-00000-000	01/Octubre/2013
Dibujos:	Rad. N° 13-233021-00000-000	01/Octubre/2013
Prioridad	ES P201130300	04/Marzo/2011

2. Objeto de la invención

De acuerdo con lo establecido en el numeral 1.2.2.2 del Capítulo Primero del Título X de la Circular Única para efectos del examen de patentabilidad, se tendrá en cuenta la tasa pagada por el solicitante al momento de comenzar el examen para las reivindicaciones adicionales; esto es que cuando la solicitud contenga más de diez (10) reivindicaciones y no se haya pagado la tasa complementaria, sólo se estudiarán las cubiertas por la tasa pagada. Por lo tanto, se estudiaran las reivindicaciones 1 a 17.

Título de la solicitud: “Procedimiento de acceso a la superficie exterior de torres de aerogeneradores y dispositivo de uso con el mismo” (Fl. 1).

El problema planteado en esta solicitud, consiste en la necesidad de un método y una

Superintendencia de Industria y Comercio: Cra 13 No. 27-00 pisos 1, 3, 4, 5, 6, 7 y 10 - PBX: (571) 5870000
E-mail: contactenos@sic.gov.co - Bogotá D.C., Colombia.
Señor ciudadano la entidad le ofrece los siguientes canales para hacer seguimiento a su solicitud así:
Página web: www.sic.gov.co
Centro de atención telefónica en Bogotá: 5920400
Línea gratuita a nivel nacional: 018000 910165
Kiosco Informático Centro Comercial Gran Estación en Bogotá
MINCOMERCIO INDUSTRIA Y TURISMO

plataforma para el acceso a la superficie exterior de un aerogenerador, que permitan evitar el uso de grúas externas que generan altos costos, el uso de andamios que necesitan largos tiempos de implementación, entre otros inconvenientes, los cuales se presentan con los métodos y plataformas convencionales.

Para resolver este problema técnico, la solicitud en estudio propone un procedimiento de acceso a la superficie exterior de torres de aerogeneradores que comprende: fijar un carril perimetral exterior en la superficie de la torre, practicar un orificio por encima de dicho carril, disponer una plataforma de trabajo en la base de la torre, insertar un enrollador de cable en el orificio, elevar la plataforma accionando el enrollador de cable, disponer de unos medios de suspensión y translación horizontal sobre el carril horizontal, conectar la plataforma a dichos medios de suspensión y traslación horizontal, entre otras etapas del proceso. Así como también, presenta el dispositivo por medio del cual se lleva a cabo dicho método.

El objeto de la presente solicitud se relaciona con la Clasificación Internacional de Patentes (CIP): E 04 G 3/28 // 3/30; F 03 D 1/00.

3. Análisis de la Prioridad

Se acepta la reivindicación de prioridad porque ésta solicitud fue presentada dentro del plazo establecido (Art. 9 D 486) y su contenido técnico corresponde con el de la prioridad reivindicada.

4. Reivindicaciones relativas a un uso o a un segundo uso (Art 14 y 21 D 486)

De acuerdo con el artículo 14 de la Decisión 486, los usos no pueden ser objeto de patente. En consecuencia, la reivindicación 17 no contiene materia patentable. Se sugiere al solicitante eliminar dicha reivindicación.

5. Determinación del Estado de la Técnica

Considerando que la fecha de presentación de la solicitud de prioridad es el 04 de marzo de 2011, se buscaron documentos relacionados en el estado de la técnica, con fecha de publicación anterior a ésta.

Consultadas las bases de datos y los archivos con que cuenta la entidad, no se encontró documento alguno que afecte la patentabilidad.

6. Conclusión

De acuerdo con la determinación del estado de la técnica, esta Oficina concluye que el procedimiento de acceso a la superficie exterior de torres de aerogeneradores y el dispositivo por medio del cual se lleva a cabo este procedimiento, reclamados en la solicitud estudiada, contiene características novedosas y que tienen nivel inventivo. Se recuerda al solicitante tener en cuenta las objeciones expuestas en el numeral 4, al momento de dar respuesta a este requerimiento.

Superintendencia de Industria y Comercio: Cra 13 No. 27-00 pisos 1, 3, 4, 5, 6, 7 y 10 - PBX: (571) 5870000
E-mail: contactenos@sic.gov.co - Bogotá D.C., Colombia.
Señor ciudadano la entidad le ofrece los siguientes canales para hacer seguimiento a su solicitud así:
Página web: www.sic.gov.co
Centro de atención telefónica en Bogotá: 5920400
Línea gratuita a nivel nacional: 018000 910165
Kiosco Informático Centro Comercial Gran Estación en Bogotá
MINCOMERCIO INDUSTRIA Y TURISMO

En cumplimiento del artículo 45 de la Decisión 486 de la Comisión de la Comunidad Andina, se le indica que debe dar respuesta dentro del término de sesenta (60) días contados a partir del día siguiente de la fecha de notificación de la presente comunicación. En caso de no dar respuesta al presente requerimiento, o si a pesar de la respuesta subsistieran los impedimentos para la concesión, se denegará la patente.

Se invita al solicitante se sirva indicar, si así lo considera, su renuncia al término faltante de sesenta (60) días para dar respuesta a este requerimiento y presentarla por escrito.

Finalmente, se le recuerda al solicitante que si como respuesta a este requerimiento llegara a modificar el capítulo reivindicatorio y éste contenga más de diez (10) reivindicaciones, no pagará la tasa de modificación voluntaria pero sí la correspondiente al pago por reivindicación adicional.

Notifíquese el presente oficio conforme a lo dispuesto en el numeral 5.2, literal e), del capítulo quinto del título primero de la Circular Única No. 10 de 2001.

JOSÉ LUIS SALAZAR LÓPEZ
Director de Nuevas Creaciones (c)

El anterior requerimiento fue notificado por fijación en lista, de fecha 2015-04-14

Elaboró: Monica Andrea Gutierrez Almonacid
Revisó: Sonia Andrea Diaz Pirazan

Superintendencia de Industria y Comercio: Cra 13 No. 27- 00 pisos 1, 3, 4, 5, 6, 7 y 10 - PBX: (571) 5870000
E-mail: contactenos@sic.gov.co - Bogotá D.C., Colombia.
Señor ciudadano la entidad le ofrece los siguientes canales para hacer seguimiento a su solicitud así:
Página web: www.sic.gov.co
Centro de atención telefónica en Bogotá: 5920400
Línea gratuita a nivel nacional: 018000 910165
Kiosco Informático Centro Comercial Gran Estación en Bogotá
MINCOMERCIO INDUSTRIA Y TURISMO

Search history

Search 1:	TAC=(washing) and PA=(whirpool) (Results 43)
Search 2:	PA=(whirpool) (Results 301)
Search 3:	PR=(BR1020120172682) (Results 0)
Search 4:	TAC=(accesing wind tower) (Results 0)
Search 5:	TAC=(accessing wind tower) (Results 0)
Search 6:	TAC=(platform wind tower) (Results 0)
Search 7:	FT=(platform wind tower) (Results 0)
Search 8:	FT=(platform and wind tower) (Results 138)
Search 9:	FT=(platform and wind tower and acces) (Results 2)
Search 10:	FT=(platform and wind tower and access) (Results 65)
Search 11:	FT=(platform and wind tower and access) (Results 65)

1) Family number: 9964818 (US4687376A)

© PatBase

Title: Multi-reel operational lines laying vessel

Abstract: Source: US4687376A A reel pipelaying vessel having multiple reels for laying operational lines in a wide range of water depths. An operational lines laying device is mounted on the vessel in order to provide supporting means for the simultaneous layout of a plurality of operational lines at a common velocity and in a predetermined relationship to one another. Motive means are interconnected to the multiple reels in order to control the rate of layout. Separate or combined straightening and tensioning devices can be employed for handling the rigid walled pipeline contained within the operational lines. The straightening and tensioning devices can be mounted for pivotal movement with respect to the vessel deck or can be operated in fixed planes with respect to the deck. Six or more operational lines can be simultaneously laid out with the vessel described.

Classifications:
International (IPC 8-9): B65H51/00 E02D15/00 F16L1/14 F16L1/20 F16L1/23 (Advanced/Invention);
B65H51/00 E02D15/00 F16L1/12 (Core/Invention);
F16L (Subclass/Invention)
International (IPC 1-7): B21D3/00 B63B27/24 B63B35/04 B63B35/2 B63B35/44 B65H51/00 B65H54/28 B65H75/48 E02D15/00 F16L1/04 F16L1/12 F16L1/14
CPC: F16L1/202 F16L1/203 F16L1/207 F16L1/23
European: F16L1/20C F16L1/20C2 F16L1/20C8 F16L1/23
US: 242/388.7 242/397.2 242/403 242/54R 254/134.3SC 405/166 405/168 405/168.1 405/168.3 405/168.4 72/161

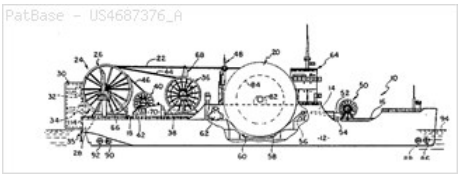

Family:

Publication number	Publication date	Application number	Application date
AU198546413 A1	19860306	AU19850046413	19850819
AU198816627 A1	19880811	AU19880016627	19880525
AU198816628 A1	19880811	AU19880016628	19880525
AU198816629 A1	19880811	AU19880016629	19880525
AU569991 B2	19880225	AU19850046413	19850819
AU593444 B2	19900208	AU19880016628	19880525
AU594575 B2	19900308	AU19880016629	19880525
AU594879 B2	19900315	AU19880016627	19880525
BRPI8504114 A	19860617	BR1985PI04114	19850828
BRPI8600951 A	19870304	BR1986PI00951	19860305
CA1251053 A1	19890314	CA19850485266	19850626
CA1261156 A1	19890926	CA19850577063	19850626
CA1261156 A2	19890926	CA19880577063	19880909
CA1261156 C	19890926	CA19850485266	19850626
CA1261157 A1	19890926	CA19850577064	19850626
CA1261157 A2	19890926	CA19880577064	19880909
CA1261310 A1	19890926	CA19850577062	19850626
CA1261310 A2	19890926	CA19880577062	19880909
DK398585 A	19860301	DK19850003985	19850830
DK398585 A0	19850830	DK19850003985	19850830
ES546567 A1	19870501	ES19850546567	19850830
ES557320 A1	19870901	ES19870557320	19870115
ES8705322 A1	19870716	ES19850546567	19850830
ES8708044 A1	19871116	ES19870557320	19870115
GB2163827 A1	19860305	GB19850020615	19850816
GB2163827 B2	19881229	GB19850020615	19850816
GB2178129 A1	19870204	GB19860004252	19860220
GB2178129 B2	19900328	GB19860004252	19860220
GB2199631 A1	19880713	GB19870030315	19871230
GB2199631 B2	19881214	GB19870030315	19871230
GB2199632 A1	19880713	GB19870030316	19871230
GB2199632 B2	19881214	GB19870030316	19871230
GB2210673 A1	19890614	GB19880028852	19881209
GB2210673 B2	19900328	GB19880028852	19881209
GB2217424 A1	19891025	GB19890007552	19890404
GB2217424 B2	19900328	GB19890007552	19890404
GB8520615 A0	19850925	GB19850020615	19850816
GB8604252 A0	19860326	GB19860004252	19860220
GB8730315 A0	19880203	GB19870030315	19871230
GB8730316 A0	19880203	GB19870030316	19871230
GB8828852 A0	19890118	GB19880028852	19881209
GB8907552 A0	19890517	GB19890007552	19890404
NL8501990 A	19860317	NL19850001990	19850711
NO167727 B	19910826	NO19850003415	19850830
NO167727 C	19911211	NO19850003415	19850830
NO174598 B	19940221	NO19880002166	19880518
NO174598 C	19940601	NO19880002166	19880518
NO853415 A	19860303	NO19850003415	19850830
NO862322 A	19870123	NO19860002322	19860610
NO862322 A0	19860610	NO19860002322	19860610
NO882166 A	19860303	NO19880002166	19880518
NO882166 A0	19880518	NO19880002166	19880518
US4687376 A	19870818	US19840646112	19840831
US4721411 A	19880126	US19870010298	19870202
US4723874 A	19880209	US19870009835	19870202
US4789108 A	19881206	US19870010163	19870202
US4820082 A	19890411	US19870048454	19870511
US4917540 A	19900417	US19880268237	19881107
US4961671 A	19901009	US19900484479	19900226
US4984934 A	19910115	US19880267973	19881107

Priority:

US19840646112 19840831	CA19850485266 19850626	US19850757790 19850722
CA19850577062 19850626	CA19850577063 19850626	CA19850577064 19850626
US19870048454 19870511	GB19850020615 19850816	GB19860004252 19860220
NO19850003415 19850830	US19870010298 19870202	US19870009835 19870202
US19870010163 19870202	AU19850046413 19850819	US19880268238 19881107
NO19880002166 19880518	CA19880577064 19880909	CA19880577062 19880909
US19880268237 19881107	US19900484479 19900226	US19880267973 19881107

CA19880577063 19880909

Assignee(s): (std)**:** SANTA FE INT CORP ; STENA OFFSHORE LTD

Assignee(s): SANTA FE INT TE ALHAMBRA CALIFORNIE VER ST V AM CORP ; SANTA FE INT TE ALHAMBRA CAL CORP ; SANTE FE INT CORP ; CHEMICAL BANK ; RECALDE CARLOS E ; SANTA FE INT

Inventor(s): (std)**:** RECALDE CARLOS E ; RECALDE CARLOS EDUARDO

Inventor(s): CARLOS EDUARDO RECALDE

2) Family number: 11039557 (US5062765A)

© PatBase

Title: HIGH TOWER WIND GENERATING SYSTEM

Abstract: Source: US5062765A A more efficient wind power generation system is afforded by extending tower heights to several hundred meters to operate wind catching rotors and generators aligned with the wind direction at various levels along the tower. With multiple vertically cascaded wind generators and higher velocity winds at higher elevations greater power is produced in a system characterized by a small footprint. This is particularly enhanced by a single mast construction, which is supported by a dynamic guy wire tensioning system to accomodate varying lateral forces primarily caused by the change in direction of wind loads on the tower. The mast is built from modular sections connected together at articulated joints, between which the various rotors are stationed. Thus, the accumulated torques and lateral stresses in the tower are minimized and do not accumulate along the length of the tower thereby to lengthen life expectation and reduce the chances for catastrophic failure in the presence of the higher velocity winds encountered. Also maintenance at such heights necessary where movable parts are present, is enhanced by an internal lift in the mast structure and an uppermost work **platform** with a rotatable lifting crane.

Classifications:
International (IPC 8-9): F03D1/00 F03D11/04 (Advanced/Invention);
F03D1/00 F03D11/00 (Core/Invention)
International (IPC 1-7): F03D1/02 F03D7/02 F03D7/04 F03D9/00
CPC: Y10S415/908 F03D1/00 F03D11/04 F05B2240/40 F05B2240/9121 F05B2240/916 Y02E10/728 Y10T74/18696 Y10T74/19847 Y10T403/32049 Y10T403/32181
European: F03D1/00 F03D11/04
US: 290/44 290/55 403/58 403/74 415/4.3 415/4.5 415/908 416/132B 416/9 464/125 52/114 52/30 52/65 74/412TA 74/424.8R 74/89.15 74/89.38

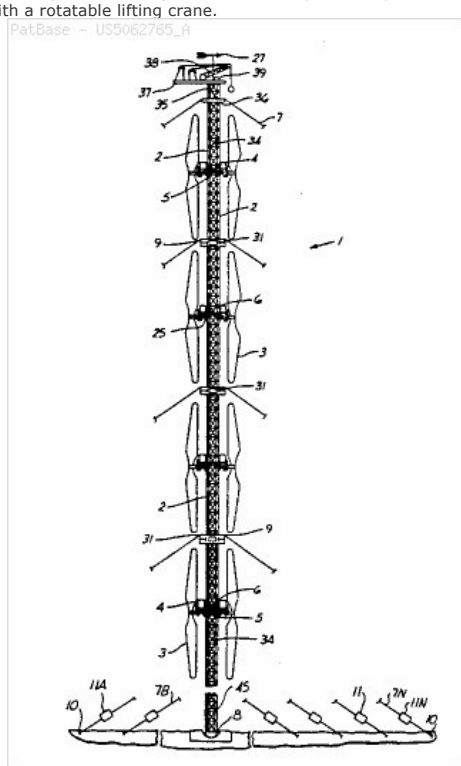

Family:

Publication number	Publication date	Application number	Application date
US5062765 A	19911105	US19900542578	19900625
US5146096 A	19920908	US19910735319	19910724
US5182458 A	19930126	US19920850992	19920312

Priority:
US19900542578 19900625 US19910735319 19910724

Assignee(s): (std): MCCONACHY H REGINALD ; MCCONACHY HARRY R

Inventor(s): (std): MCCONACHY H REGINALD ; MCCONACHY HARRY R

3) Family number: 28253078 (US2002084142A)

Title: GUIDE RAIL CLIMBING LIFTING **PLATFORM** AND METHOD

Abstract: Source: US2002084142A A guide rail system is used to erect towers, to place equipment on towers and for maintenance of towers. The guide rail may be added to existing towers. a climbing lifting **platform** is attached to the guide rails and is used to transport items up and down the tower. The **platform** may also be used to carry up tower sections during erection of the tower.

Classifications:
International (IPC 8-9): B66B9/187 F03D1/00 (Advanced/Invention)
International (IPC 1-7): A63B27/00 B66B9/187
CPC: E04H12/342 F03D1/001 B66B9/187 F05B2230/61 Y02E10/728
European: B66B9/187 F03D1/00B R05B230/610 Y02E10/72N
US: 182/103 182/133 182/19 52/745.01

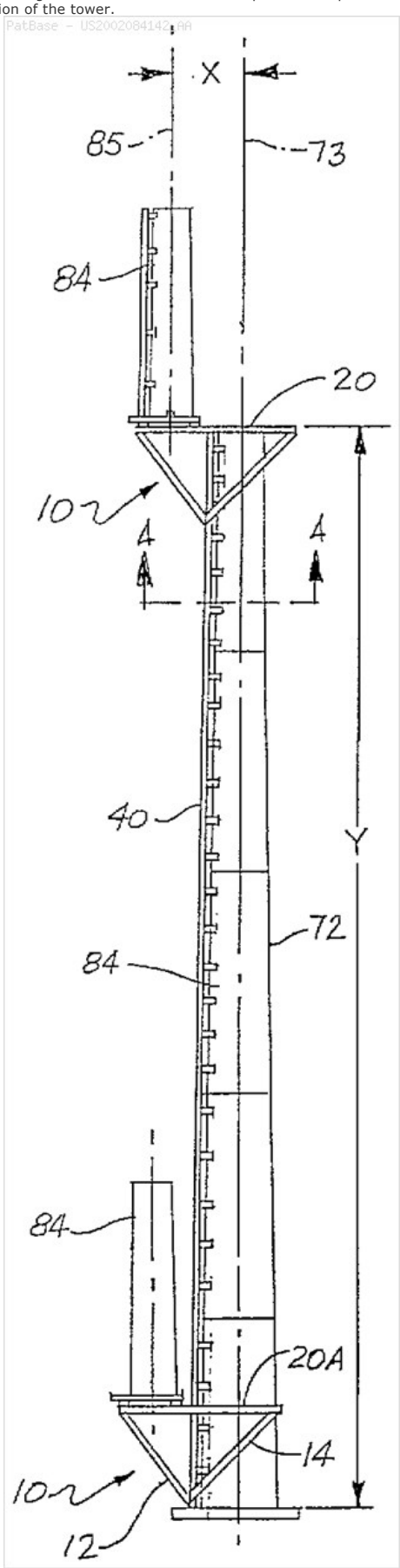

Family:

Publication number	Publication date	Application number	Application date
AT305895 E	20051015	AT20000710007T	20000602

DE60022944 D1	20051110	DE20006022944	20000602
DE60022944 T2	20060323	DE20006022944T	20000602
DK1057770 T3	20060220	DK20000710007T	20000602
EP1057770 A2	20001206	EP20000710007	20000602
EP1057770 A3	20020612	EP20000710007	20000602
EP1057770 B1	20051005	EP20000710007	20000602
ES2248034 T3	20060316	ES20000710007T	20000602
PT1057770 T	20051130	PT20000710007T	20000602
US2002084142 AA	20020704	US20020082878	20020226
US6357549 BA	20020319	US20000586013	20000602

Priority:

US19990137321P 19990603 US20000586013 20000602 US20020082878 20020226

Assignee(s): (std)**:** D H BLATTNER AND SONS INC ; ELGOOD MAYO CORP

Assignee(s): ELGOOD MAYO CORP LANCASTER ; FREDRICKSON RALPH DOUGLAS ; LEISENING BRENT R ; D H BLATTNER AND SONS INC AVON ; DH BLATTNER AND SONS INC ; DIEDRICH CARL W ; BRENNAN DONALD D ; BURKHART GEORGE M

Inventor(s): (std)**:** LEISENRING BRENT R ; LEISENING BRENT R ; FREDRICKSON RALPH DOUGLAS ; DOUGLAS FREDRICKSON RALPH ; DIEDRICH CARL W ; BURKHART GEORGE M ; BRENNAN DONALD D

Designated states: AT BE CH CY DE DK ES FI FR GB GR IE IT LI LU MC NL PT SE

4) Family number: 23246320 (US2004056486A)

© PatBase

Title: WIND FARM

Abstract: Source: US2004056486A The present invention relates to wind farms, so called, comprising at least two wind turbines and in particular to offshore wind farms. In order to provide a wind farm in which transport between separate wind turbines can be effected more safely and with less dependence on weather, at least one cable connection 10 is provided between at least two of the wind turbines 12 of a wind farm, and a vessel 14 is disposed on said cable connection 10.

Classifications:
International (IPC 8-9): B61B12/02 B61B7/00 F03D11/00 F03D11/04 F03D9/00 F03D9/02 H02P9/00 (Advanced/Invention);
F03D11/04 (Advanced/Non-invention);
B61B12/00 B61B7/00 F03D11/00 F03D9/00 H02P9/00 (Core/Invention)
International (IPC 1-7): B61B12/02 B61B7/00 B63B35/44 F03D11/00 F03D11/04 F03D9/00 F03D9/02 H02P9/00
CPC: B61B7/00 F03D11/00 F05B2230/80 F05B2240/95 F05B2240/96 Y02E10/722 Y02E10/72
European: B61B7/00 F03D11/00 R05B230/80 R05B240/95 R05B240/96 Y02E10/72D Y02E10/72H Y02E10/72N
US: 104/112 104/173.1 104/18 104/249 104/251 290/44

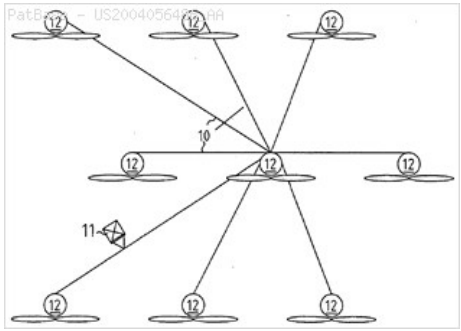

Family:

Publication number	Publication date	Application number	Application date
AT327132 E	20060615	AT20010965267T	20010908
AU2001285938 AA	20020429	AU20010285938	20010908
AU2001285938 BB	20060119	AU20010285938	20010908
AU2001285938 BI	20060223	AU20010285938	20010908
AU200185938 A5	20020429	AU20010085938D	20010908
BRPI0114687 A	20040113	BR2001PI14687	20010908
BRPI0114687 B1	20100727	BR2001PI14687	20010908
CA2425529 AA	20030411	CA20012425529	20010908
CA2425529 C	20060214	CA20012425529	20010908
CN100430280 C	20081105	CN20018017530	20010908
CN1469825 A	20040121	CN20018017530	20010908
DE10051513 A1	20020425	DE20001051513	20001017
DE50109899 D1	20060629	DE20015009899	20010908
DK1328429 T3	20060918	DK20010965267T	20010908
EP1328429 A1	20030723	EP20010965267	20010908
EP1328429 B1	20060524	EP20010965267	20010908
ES2261461 T3	20061116	ES20010965267T	20010908
IN00546CN2003 A	20050415	IN2003CN00546	20030416
IN201554 B	20070223	IN2003CN00546	20030416
JP2004511706 T2	20040415	JP20020535941T	20010908
KR100638081 B1	20061024	KR20037005307	20030416
KR20030036935 A	20030509	KR20037005307	20030416
PT1328429 T	20060831	PT20010965267T	20010908
TR200300480 T2	20030922	TR20030000480T	20010908
US2004056486 AA	20040325	US20030399574	20030919
US7337726 BB	20080304	US20030399574	20030919
WO0232739 A1	20020425	WO2001EP10391	20010908

Priority:
DE20001051513 20001017 WO2001EP10391 20010908 DE20015009899 20010908

Assignee(s): (std): ALOYS WOBBEN ; WOBBEN ALOYS

Inventor(s): (std): WOBBEN ALOYS ; ALOYS WOBBEN

Agent(s): SEED IP LAW GROUP PLLC

Designated states: AE AG AL AM AT AU AZ BA BB BE BF BG BJ BR BY BZ CA CF CG CH CI CM CN CO CR CU CY CZ DE DK DM DZ EE ES FI FR GA GB GD GE GH GM GN GQ GR GW HR HU ID IE IL IN IS IT JP KE KG KP KR KZ LC LI LK LR LS LT LU LV MA MC MD MG MK ML MN MR MW MX MZ NE NL NO NZ PL PT RO RU SD SE SG SI SK SL SN SZ TD TG TJ TM TR TT TZ UA UG US UZ VN YU ZA ZW

5) Family number: 23132122 (WO0238953A2)

© PatBase

Title: **WIND** **TOWER** WITH LADDERS AND **PLATFORMS**

Abstract: A ladder assembly for a tower for a wind power generation.

Classifications:
International (IPC 8-9): E06C9/02 F03D1/00 (Advanced/Invention)
International (IPC 1-7): E04G1/24 F03D
CPC: E06C9/02 F03D1/003 Y02E10/72
European: E06C9/02 F03D1/00C Y02E10/72

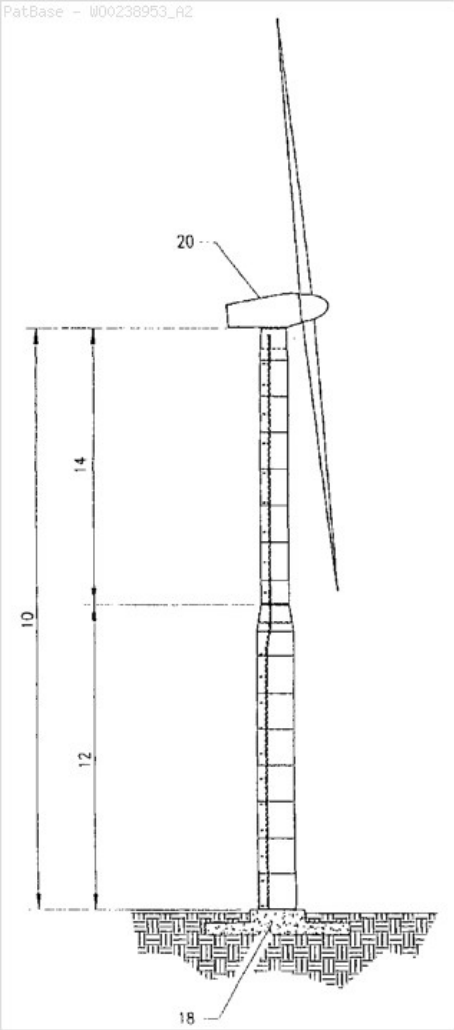

Family:

Publication number	Publication date	Application number	Application date
AU2002225600 AA	20020521	AU20020225600	20011109
WO0238953 A2	20020516	WO2001US42932	20011109
WO0238953 A3	20030501	WO2001US42932	20011109

Priority:

US20000716123 20001109 WO2001US42932 20011109

Assignee(s): (std)**:** BEAIRD IND INC

Assignee(s): BEAIRD INDUSTRIES INC

Inventor(s): (std)**:** MALISZEWSKI LEONARD P ; LASHLEY PATRICK C

Inventor(s): PATRICK C LASHLEY ; LEONARD P MALISZEWSKI

Designated states: AE AG AL AM AT AU AZ BA BB BE BF BG BJ BR BY BZ CA CF CG CH CI CM CN CO CR CU CY CZ DE DK DM DZ EC EE ES FI FR GA GB GD GE GH GM GN GQ GR GW HR HU ID IE IL IN IS IT JP KE KG KP KR KZ LC LK LR LS LT LU LV MA MC MD MG MK ML MN MR MW MX MZ NE NL NO NZ OM PH PL PT RO RU SD SE SG SI SK SL SN SZ TD TG TJ TM TR TT TZ UA UG UZ VN YU ZA ZW

6) Family number: 23132074 (US6532700B) © PatBase

Title: Flange with cut for **wind** **tower**

Abstract: Source: US6532700B A flange for making a tower for a wind generator made up of a plurality of cylindrical segments, at least one conical transition rings, a plurality of L-shaped flanges having L cuts and a T-shaped flange.

Classifications:
International (IPC 8-9): E04H12/08 E04H12/34 F03D11/04 (Advanced/Invention)
International (IPC 1-7): E04H12/00 E04H12/08
CPC: E04H12/085 E04H12/34 F03D11/04 Y02E10/728
European: E04H12/08F E04H12/34 F03D11/04 Y02E10/72N
US: 174/45R 290/44 343/875 52/40 52/400 52/848

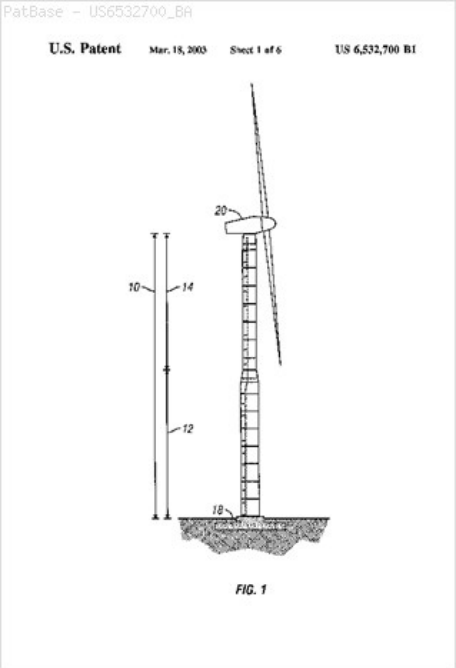

Family:

Publication number	Publication date	Application number	Application date
AU2002217766 AA	20020521	AU20020217766	20011109
US6532700 BA	20030318	US20000716122	20001109
WO0238891 A1	20020516	WO2001US42930	20011109

Priority:
US20000716122 20001109 WO2001US42930 20011109

Assignee(s): (std): BEAIRD IND INC
Assignee(s): BEAIRD INDUSTRIES ; BEAIRD INDUSTRIES INC ; SANDSTONE ENTERPRISES LLC ; BEAIRD CO LTD ; BEAIRD IND
Inventor(s): (std): LASHLEY PATRICK C ; MALISZEWSKI LEONARD P
Inventor(s): PATRICK C LASHLEY ; LEONARD P MALISZEWSKI
Designated states: AE AG AL AM AT AU AZ BA BB BE BF BG BJ BR BY BZ CA CF CG CH CI CM CN CO CR CU CY CZ DE DK DM DZ EC EE ES FI FR GA GB GD GE GH GM GN GQ GR GW HR HU ID IE IL IN IS IT JP KE KG KP KR KZ LC LK LR LS LT LU LV MA MC MD MG MK ML MN MR MW MX MZ NE NL NO NZ OM PH PL PT RO RU SD SE SG SI SK SL SN SZ TD TG TJ TM TR TT TZ UA UG UZ VN YU ZA ZW

7) Family number: 23132072 (US6470645B) © PatBase

Title: Method for making and erecting a **wind** **tower**

Abstract: Source: US6470645B A method for making a tower for a wind generator made up of a plurality of cylindrical segments, a plurality of transition rings with at least one being frustro-conical, a plurality of L-shaped flanges and a T-shaped flange.

Classifications:
International (IPC 8-9): E04H12/08 E04H12/34 F03D11/04 (Advanced/Invention)
International (IPC 1-7): E04H12/08
CPC: E04H12/085 E04H12/34 F03D11/04 F03D11/045 F05B2240/912 Y02E10/728
European: E04H12/08F E04H12/34 F03D11/04 F03D11/04B R05B240/912 Y02E10/72N
US: 52/40 52/745.18

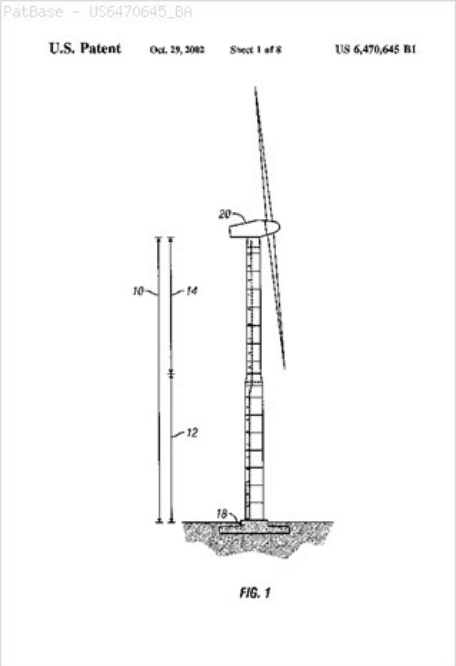

Family:

Publication number	Publication date	Application number	Application date
AU2002219784 AA	20020521	AU20020219784	20011109
US6470645 BA	20021029	US20000716118	20001109
WO0238890 A1	20020516	WO2001US42929	20011109

Priority:
US20000716118 20001109 WO2001US42929 20011109

Assignee(s): (std): BEAIRD IND INC
Assignee(s): BEAIRD INDUSTRIES ; BEAIRD INDUSTRIES INC ; SANDSTONE ENTERPRISES LLC ; BEAIRD CO LTD ; BEAIRD IND
Inventor(s): (std): LASHLEY PATRICK C ; MALISZEWSKI LEONARD P
Inventor(s): PATRICK C LASHLEY ; LEONARD P MALISZEWSKI
Designated states: AE AG AL AM AT AU AZ BA BB BE BF BG BJ BR BY BZ CA CF CG CH CI CM CN CO CR CU CY CZ DE DK DM DZ EC EE ES FI FR GA GB GD GE GH GM GN GQ GR GW HR HU ID IE IL IN IS IT JP KE KG KP KR KZ LC LK LR LS LT LU LV MA MC MD MG MK ML MN MR MW MX MZ NE NL NO NZ OM PH PL PT RO RU SD SE SG SI SK SL SN SZ TD TG TJ TM TR TT TZ UA UG UZ VN YU ZA ZW

8) Family number: 23132121 (US6467233B)

© PatBase

Title: **Wind tower**

Abstract: Source: US6467233B A tower for a wind generator made up of a plurality of sections to which are affixed a plurality of transition rings, at least one being conical in shape, a plurality of L-shaped flanges and a T-shaped flange.

Classifications:
International (IPC 8-9): F03D11/04 (Advanced/Invention)
International (IPC 1-7): E04H12/00 E04H12/34 F03D1/06
CPC: E04H12/085 F03D11/04 F05B2240/912 Y02E10/721 Y02E10/728
European: E04H12/08F F03D11/04 R05B240/912 Y02E10/72B Y02E10/72N
US: 290/44 290/55 415/208.1 52/170 52/245 52/725 52/726.4 52/736.1 52/736.2 52/831 52/848 527/201

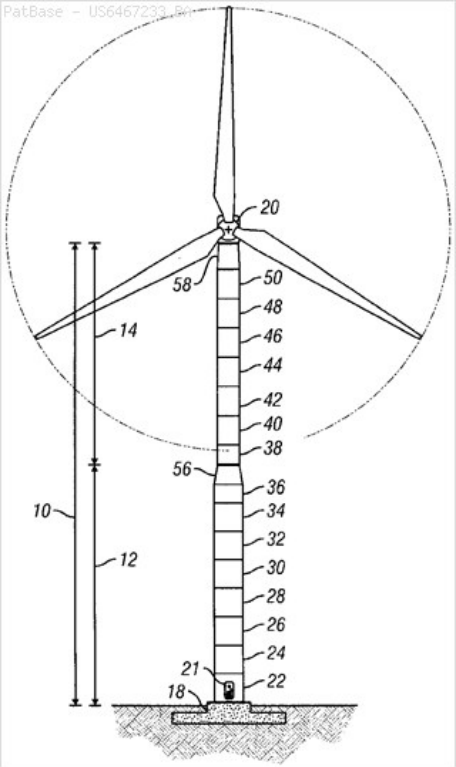

Family:

Publication number	Publication date	Application number	Application date
AU2002225599 AA	20020521	AU20020225599	20011109
US6467233 BA	20021022	US20000711211	20001109
WO0238952 A2	20020516	WO2001US42931	20011109
WO0238952 A3	20020801	WO2001US42931	20011109

Priority:
US20000711211 20001109 WO2001US42931 20011109

Assignee(s): (std): BEAIRD IND INC

Assignee(s): BEAIRD INDUSTRIES ; BEAIRD INDUSTRIES INC ; SANDSTONE ENTERPRISES LLC ; BEAIRD CO LTD ; BEAIRD IND

Inventor(s): (std): MALISZEWSKI LEONARD P ; LASHLEY PATRICK C

Inventor(s): PATRICK C LASHLEY ; LEONARD P MALISZEWSKI

Designated states: AE AG AL AM AT AU AZ BA BB BE BF BG BJ BR BY BZ CA CF CG CH CI CM CN CO CR CU CY CZ DE DK DM DZ EC EE ES FI FR GA GB GD GE GH GM GN GQ GR GW HR HU ID IE IL IN IS IT JP KE KG KP KR KZ LC LK LR LS LT LU LV MA MC MD MG MK ML MN MR MW MX MZ NE NL NO NZ OM PH PL PT RO RU SD SE SG SI SK SL SN SZ TD TG TJ TM TR TT TZ UA UG UZ VN YU ZA ZW

9) Family number: 30054114 (US2006120809A)

© PatBase

Title: METHOD AND CRANE FOR INSTALLING, MAINTAINING AND DECOMMISSIONING WIND TURBINES

Abstract: Source: US2006120809A Method and apparatus for installing, maintaining and decommissioning wind turbines, both onshore and offshore, comprises a crane having extendable legs that allow it to climb a tower that it is erecting in sections by engaging the tower by friction or mechanical interference. The crane may carry the wind turbine nacelle on its upper members during construction of the tower and may be fitted with a crane for handling tower sections, or it may carry an "A" crane for lifting the nacelle and its components once the tower is complete or for constructing heavy maintenance. The crane may be fitted with various lifting and handling means to facilitate maintenance or the installation, maintenance or removal or airfoil rotor blades.

Classifications:
International (IPC 8-9): E21B17/01 F03D1/00 (Advanced/Invention)
International (IPC 1-7): F03D1/00
CPC: E02B2017/0091 E02D27/42 F03D1/001 F03D11/045 F05B2230/6102 F05B2240/916 F05B2240/95 Y02E10/726 Y02E10/727 Y02E10/728
European: E02D27/42 F03D1/00B F03D11/04B P02B17/00M R05B230/6102 R05B240/916 R05B240/95 Y02E10/72J Y02E10/72L Y02E10/72N
US: 405/195.1 405/195.100P

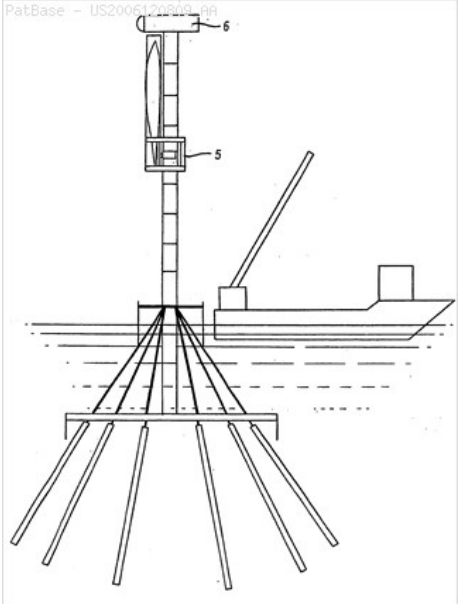

Family:

Publication number	Publication date	Application number	Application date
AT410593 E	20081015	AT20030732666T	20030527
AU2003240049 AA	20031212	AU20030240049	20030527
DE60323977 D1	20081120	DE20036023977	20030527
DK1518053 T3	20100125	DK20030732666T	20030527
EP1518053 A1	20050330	EP20030732666	20030527
EP1518053 B1	20081008	EP20030732666	20030527
ES2316768 T3	20090416	ES20030732666T	20030527
GB200212258 A0	20020710	GB20020012258	20020528
GB200219994 A0	20021009	GB20020019994	20020829
GB200227870 A0	20030108	GB20020027870	20021129
PT1518053 T	20090109	PT20030732666T	20030527
US2006120809 AA	20060608	US20030516062	20030527
WO03100248 A1	20031204	WO2003GB02287	20030527

Priority:

GB20020012258 20020528 GB20020019994 20020829 GB20020027870 20021129 WO2003GB02287 20030527

Assignee(s): (std): BOREAS CONSULTANTS LTD ; INGRAM JAMES ; ITI SCOTLAND LTD ; MCINTYRE STUART ; WILLIS STEWART KENYON ; WILLIS STEWART K

Assignee(s): OREADA LTD ; SILICON VALLEY BANK ; ITI SCOTLAND ; ITI SCOTLAND LIMITED ; ALTERNATIVE ENERGY RESOURCES INC ; ATKINS BOREAS CONSULTANTS LTD ; ATKINS LTD ; BOREAS CONSULTANTS LIMITED

Inventor(s): (std): INGRAM JAMES ; MCINTYRE STUART ; WILLIS STEWART ; WILLIS STEWART K ; WILLIS STEWART KENYON

Inventor(s): STEWART KENYON WILLIS ; STUART MCINTYRE ; JAMES INGRAM

Agent(s): BINGHAM IAN MARK; KIRKPATRICK AND LOCKHART NICHOLSON GRAHAM LLP

Designated states: AE AG AL AM AT AU AZ BA BB BE BF BG BJ BR BY BZ CA CF CG CH CI CM CN CO CR CU CY CZ DE DK DM DZ EC EE ES FI FR GA GB GD GE GH GM GN GQ GR GW HR HU ID IE IL IN IS IT JP KE KG KP KR KZ LC LI LK LR LS LT LU LV MA MC MD MG MK ML MN MR MW MX MZ NE NL NO NZ OM PH PL PT RO RU SD SE SG SI SK SL SN SZ TD TG TJ TM TN TR TT TZ UA UG US UZ VN YU ZA ZM ZW

10) Family number: 31303397 (US2004220753A)

© PatBase

Title: Home-land intelligent system's technology "H-LIST"

Abstract: Source: US2004220753A A mobile home-land intelligent system's technology "H-LIST" for monitoring suspicious terrorist activities and for tracking biological and chemical gases, and explosives, including detection of stationary and portable weapons of mass destruction such that are likely carried on the body of a terrorist person or suicide bombers, or that are likely planted in a parked vehicle or carried inside a moving vehicle, wherein a sensory **platform** is made effective in a jacket worn by officers, security officers, bus drivers, hostesses and the like for sensing deadly gases and explosives while patrolling a defined and assigned vicinity. A receptor is attached on a waist belt worn by at least security personnel and connected to the sensory jacket output connection by at least a wireless means for empowering the sensory **platform** on the outfit and for receiving signal communication wirelessly indicative of detecting a sensed agent. Detected signals are transported wirelessly through radio frequency signals to a central security monitoring station to enable initiating for at least a backup security personnel or agents to the vicinity of the detection. The sensors are multifunctional and coded to recognize wavelike pattern of gases and explosives through generated radio wave frequencies from a transmitter and modulated by a frequency-modulating receiver.

Classifications:
International (IPC 8-9): G01N33/00 G08B21/00 (Advanced/Invention)
International (IPC 1-7): G01N31/00 G06F19/00
CPC: G01N33/0057 G01N33/0075
European: G01N33/00D2D4M G01N33/00D2G1
US: 340/506 340/539.12 340/540 340/541 340/573.1 340/632 702/32 702/32P

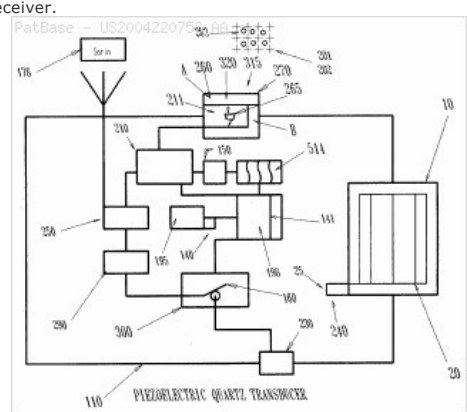

Family:

Publication number	Publication date	Application number	Application date
US2004220753 AA	20041104	US20030660473	20030912
US7271720 BB	20070918	US20030660473	20030912

Priority:

US20020426800P 20021118 US20030660473 20030912

Assignee(s): (std)**:** TABE JOSEPH

Inventor(s): (std)**:** TABE JOSEPH