PatBase - Search results 06 March 2018

Search query (3): [SP]: cross-reference to prior applicationthis application is a 371 national stage application of pct international application no. pct/se2014/050589 filed may 15, 2014, which is incorporated herein in its entirety.technical fieldthe present disclosure relates to an absorbent product, such as a panty liner. the absorbent product includes a liquid-permeable top layer, a liquid-impermeable bottom layer and an absorbent core arranged between the top layer and the bottom layer. the absorbent core includes an absorbent material with absorbent characteristics and a superabsorbent material. the product has a first extension in a longitudinal direction and a second extension in a transverse direction. the product has a longitudinal central line extending through the product and located between a first longitudinal portion and a second longitudinal portion of the product. the first and second longitudinal portions are symmetrical about the longitudinal central line. the product has a head portion, an intermediate portion and a rear portion extending in a longitudinal direction of the product. the product has an outer contour having a shape resembling an hourglass, wherein the intermediate portion includes an area with a smaller width than any area in the head portion and rear portion respectively. the core extends in the longitudinal direction and transverse direction of the product and has an outer contour that is asymmetrical with the outer contour of the product.backgroundpanty liners are absorbent products that are used to absorb small amounts of bodily fluids such as urine and blood. panty liners are smaller in size than sanitary towels or incontinence pads and are intended to be used for everyday freshness and to protect lingerie, i.e. briefs. there are several kind of briefs on the market today: traditional briefs that have a crotch portion that is relatively broad, hipster-type of briefs that have a relatively narrow crotch portion and thong-type briefs that have a very narrow crotch portion followed by an even narrower rear portion so as to expose all or significant portion of the buttocks of the user. due to many different brief models it has been difficult in the prior art to optimize the shape and size of the panty liners such that a reliable protection is obtained while the panty liner is comfortable and discreet to wear.there have been several attempts in the prior art to solve problems with adapting the absorbent products to thong-type briefs. ep1757257 a2 and ep 1138294, respectively, disclose panty liners comprising a core which is adaptable to thong-type briefs. however, while these products may be adaptable to thong-type briefs, they do not provide an optimal comfort and feeling of secure protection when used with traditional briefs or with hipster-type briefs, since neither the shape of the absorbent product itself nor the shape of the core conforms to the anatomy of the user or is shaped to be adapted to that kind of underwear. thus, there is a need for an absorbent product that can be worn with different types of underwear while optimal comfortability and protection can be provided.summaryit is desired to provide an obtained absorbent product, such as a panty liner, where the previously mentioned problems are avoided. it is also desired to provide an absorbent product that can be worn with different types of underwear while optimal comfortability and protection can be provided.as used herein, the term "panty liner" means an absorbent product which is used for feminine hygiene and which is narrower than sanitary napkins. panty liners absorb less liquid than sanitary napkins and are thus aimed for light bodily discharge and for everyday cleanliness. the product disclosed herein includes a liquid-permeable top layer, a liquid-impermeable bottom layer and an absorbent core arranged between the top layer and the bottom layer. the absorbent core includes an absorbent material with absorbent characteristics and a superabsorbent material. the product has a first extension in a longitudinal direction and a second extension in a transverse direction. the product has a longitudinal central line extending through the product and located between a first longitudinal portion and a second longitudinal portion of the product. the first and second longitudinal portions are symmetrical about the longitudinal central line. the product has a head portion, an intermediate portion and a rear portion extending in a longitudinal direction of the product. the product has an outer contour having a shape resembling an hourglass, wherein the intermediate portion includes an area with a smaller width than any area in the head portion and rear portion, respectively. the core extends in the longitudinal direction and transverse direction of the product and has an outer contour that is asymmetrical with the outer contour of the product.the head portion of the product includes: a foremost point of the product in the longitudinal direction at the point where the central line of the product crosses the outer contour of the producta first product width extending between two opposing outermost points on the outer contour of the product in the transverse direction, the first product width being the broadest in the product anda first core width extending between two opposing outermost points of the outer contour of the core in the transverse direction, the first core width being the broadest in the core.the head portion transitions to the intermediate portion at intermediate transition points of the product and second transition points of the core. the core has a second core width in the transverse direction extending between two opposing second transition points of the core, the second width being smaller than the first core width.the intermediate portion of the product includes: a second product width extending between two opposing points in the area of the product having the smallest width, which second product width is longitudinally distanced from the second core width anda third core width extending between two opposing outermost points of the intermediate portion of the core, the third core width being broader than the second core width.the intermediate portion transitions to the rear portion at rear transition points of the product and at third transition points of the core.the rear portion of the product includes: a third product width which is broader than the second product width,a rear portion of the core tapering towards a rear end point which is longitudinally distanced from the rear end point of the product, and whereina point on the outer contour of the product, which has the largest distance to the outer contour of the core.by the feature of a point on the outer contour of the product having the largest distance to the outer contour of the core is meant that a perpendicular line that crosses a tangent of the point on the outer contour of the product and which perpendicular line crosses a point on the outer contour of the core has a largest distance in the rear portion of the product.one advantage with an absorbent product with the described shape is that it is suitable for use with most types of briefs, for instance thong-type briefs, traditional briefs and hipster-type briefs while optimal comfort and conformance to the wearer's body can be provided.the shape of the absorbent product has been found to fit the various widths of the crotch portions of for instance thong-type briefs, traditional briefs and hipster-type briefs while still providing a good absorption capacity, good coverage of the crotch portion of the underwear to avoid the undergarment to become soiled during use and comfort due to the shape of the core together with the shape of the complete product. the outer contour of the product follows the curvature of the crotch portion of the briefs. in the case of thong-type briefs or briefs with a tapering or narrow rear crotch portion, the shape of the product allows the rear portion of the product to be folded round the edges of the briefs, similar to a product with wings, in order to secure the product to the briefs. in the traditional briefs the absorbent product covers the crotch portion, while in the hipster-type briefs the absorbent product may extend out to the edges and beyond the edges of the crotch portion of many hipster-type briefs.the core, having an asymmetrical shape compared with the shape of the outer contour of the product, i.e. which is not resembling an hourglass shape, is designed to follow the shape of the body and fit snugly between the thighs of the user. the absorbent product according to embodiments described herein, besides being suitable to wear with all kinds of briefs, protects the briefs from getting wet and is comfortable to the skin.the ratio of the thickness between the edge area of the product and the core is from 1:35 to 1:3. the thickness of the core is from 1.5 to 3.4 mm, or from 2.2 to 3.0 mm and the thickness of the edge area of the product is 0.1 to 0.3 mm. an absorbent product according to embodiments described herein has a high absorption capacity while being soft and comfortable against the skin of a user. the thin edge area ensures that it is easy to fold the edge area around the crotch portion of the briefs if necessary, it is less noticeable and due to its thinness creates high comfort to the wearer.a shape resembling an hourglass is a shape which is wide at the ends of the product and narrows towards the middle of the product. the shape resembling an hourglass may be a symmetric or essentially symmetric shape wide at its ends and narrow in the middle. the outer contour of the produ

Results: 20

Search history

Search 1: PN=(WO2015174896) (Results 1)

Search 2: [SP]: 1. an absorbent product comprising: a liquid-permeable top layera liquid-impermeable bottom layeran absorbent core arranged between the top layer and the bottom layer, the absorbent core comprising an absorbent material with absorbent characteristics and a superabsorbent materiala first extension in a longitudinal directiona second extension in a transverse directiona longitudinal central line extending through the absorbent product and located between a first longitudinal portion and a second longitudinal portion of the absorbent product, which first and second longitudinal portions are symmetrical about the longitudinal central linea head product portion, an intermediate product portion and a rear product portion extending in a longitudinal direction of the absorbent product, wherein the intermediate product portion comprises an area with a smaller width than any area in the head product portion and rear product portion, respectively andan outer product contour having a shape resembling an hourglass,wherein the core extends in the longitudinal direction and transverse direction of the absorbent product and has an outer core contour of the core that is asymmetrical with the outer product contourwherein the head product portion comprises: a foremost product point of the absorbent product in the longitudinal direction at the point where the central line of the absorbent product crosses the outer product contoura first product width extending between two opposing outermost product points on the outer product contour in the transverse direction, the first product width being the greatest width in the absorbent producta first core width extending between two opposing outermost core points of the outer core contour in the transverse direction, the first core width being the greatest width in the core,wherein the head product portion transitions to the intermediate product portion at two opposing intermediate product transition points on the outer product contour and two opposing intermediate core transition points on the outer core contour,wherein the core has a second core width in transverse direction extending between the two opposing intermediate core transition points, the second core width being smaller than the first core width,wherein the intermediate product portion comprises: a second product width extending between two opposing innermost product points on the outer product contour in the transverse direction, the second product width being the smallest width, which second product width is longitudinally distanced from the second core width anda third core width extending between two opposing outermost intermediate core points on the outer core contour of the intermediate core portion, the third core width being the greatest width in the absorbent core rearward of the second core widthwherein the intermediate product portion transitions to the rear product portion at rear product transition points on the outer product contour and rear core

transition points on the outer core contour,wherein the rear product portion comprises: a third product width which has the greatest width in the absorbent product rearward of the second product width anda rear core portion tapering towards a rear core end point, which is the point along the outer core contour the most rearward in the longitudinal direction and which is longitudinally distanced from a rear product end point of the absorbent product, which is the point along the outer product contour the most rearward in the longitudinal direction,wherein the rear product portion contains a point on the outer product contour, which has the largest distance to the outer core contour, andwherein the third core width is longitudinally closer to the second product width than to the third product width. 2. the absorbent product according to claim 1, wherein a ratio of a thickness of an edge area of the absorbent product between the outer product contour and outer core contour and a thickness of the core is from 1:35 to 1:3. 3. the absorbent product according to claim 2, wherein the thickness of the core is from 1.5 to 3.4 mm and the thickness of the edge area of the absorbent product is 0.1 to 0.3 mm. 4. the absorbent product according to claim 1, wherein the outer product contour is an asymmetrical hourglass-shaped contour, wherein the outer product contour comprises, in the intermediate product portion, a first concave arch-shaped portion having a first radius which transitions to a second arch-shaped portion having a second radius, and wherein the first radius is smaller than the second radius. 5. the absorbent product according to claim 1, wherein the top layer comprises a nonwoven material, being a spunbond material comprising polypropylene fibres. 6. the absorbent product according to claim 1, wherein the head core portion comprises, in the respective first and second longitudinal portions, mirror imaged: a. first circular segment portions extending in a longitudinally forward direction of the core from a core transverse transition point, located on the central line between the first circular segment portions, in an acute angle beta between the central line and a tangent at the core transverse transition point in respect of the circular segment portion andb. first edge lines, to which the circular segment portions transition, tapering towards the intermediate core portion and towards the central line of the core in an angle a being from 15-45 degrees, wherein the first edge lines taper to the intermediate core transition points located between the head core portion and the intermediate core portion. 7. the absorbent product according to claim 1, wherein the intermediate core portion comprises, in the respective first and second longitudinal portions, mirror imaged first convex edge portions extending between the intermediate core transition points and the outer core transition points which are located between the intermediate core portion and the rear core portion, wherein the convex edge portions have a length of from 50-60 percent of the total length of the central line and have a maximum height of the arch in the transverse direction of the core of from 1-10 mm. 8. the absorbent product according to claim 1, wherein the rear core portion comprises second edge lines tapering towards the rear core end point and the central line of the core in an angle gamma being from 3-15 degrees, and wherein the second edge lines taper to a second edge line transition point from which the second edge lines transition to a semi-circular or circular segment rear end portion that joins the second edge lines together. 9. the absorbent product according to claim 1, wherein a total length of the absorbent product between the foremost product point and the rear product end point is from 130 to 175 mm. 10. the absorbent product according to claim 1, wherein a longitudinal extension of the head product portion is about ? of an extension of the absorbent product along the central line, a longitudinal extension of the intermediate product portion is about ? of the extension of the absorbent product along the central line and a longitudinal extension of the rear product portion is about ? of the extension of the absorbent product along the central line. 11. the absorbent product according to claim 1, wherein a longitudinal extension of the head product portion along the central line is from 40 to 50 mm, a longitudinal extension of the intermediate product portion along the central line is about 45-60 mm and a longitudinal extension of the rear product portion along the central line is about 40-50 mm of the extension of the absorbent product. 12. the absorbent product according to claim 1, wherein the first product width of the absorbent product in the head product portion is from 64-72 mm. 13. the absorbent product according to claim 1, wherein the second product width in the intermediate product portion is from 42-50 mm. 14. the absorbent product according to claim 1, wherein the third product width in the rear product portion of the absorbent product is from 55 to 63 mm. 15. the absorbent product according to claim 1, wherein the superabsorbent material in the core is in an amount from 10 to 30 percent by weight of the total weight of the core. 16. the absorbent product according to claim 1, wherein the core has a density from about 100 to 180 kg/m3. 17. the absorbent product according to claim 1, wherein the core comprises cellulosic fluff pulp, tissue, absorbent foam materials or absorbent nonwoven materials as the absorbent material. 18. the absorbent product according to claim 1, wherein an area of the absorbent product in which the core is positioned is embossed with a pattern that principally follows the design of the core. 19. the absorbent product according to claim 1, wherein the bottom layer comprises a sprayed adhesive coating on the side facing away from the body facing side of the absorbent product on which a release paper is attached. (Results 0)

Search 3: [SP]: cross-reference to prior applicationthis application is a 371 national stage application of pct international application no. pct/se2014/050589 filed may 15, 2014, which is incorporated herein in its entirety.technical fieldthe present disclosure relates to an absorbent product, such as a panty liner. the absorbent product includes a liquid-permeable top layer, a liquid-impermeable bottom layer and an absorbent core arranged between the top layer and the bottom layer. the absorbent core includes an absorbent material with absorbent characteristics and a superabsorbent material. the product has a first extension in a longitudinal direction and a second extension in a transverse direction. the product has a longitudinal central line extending through the product and located between a first longitudinal portion and a second longitudinal portion of the product. the first and second longitudinal portions are symmetrical about the longitudinal central line. the product has a head portion, an intermediate portion and a rear portion extending in a longitudinal direction of the product. the product has an outer contour having a shape resembling an hourglass, wherein the intermediate portion includes an area with a smaller width than any area in the head portion and rear portion respectively. the core extends in the longitudinal direction and transverse direction of the product and has an outer contour that is asymmetrical with the outer contour of the product.backgroundpanty liners are absorbent products that are used to absorb small amounts of bodily fluids such as urine and blood. panty liners are smaller in size than sanitary towels or incontinence pads and are intended to be used for everyday freshness and to protect lingerie, i.e. briefs. there are several kind of briefs on the market today: traditional briefs that have a crotch portion that is relatively broad, hipster-type of briefs that have a relatively narrow crotch portion and thong-type briefs that have a very narrow crotch portion followed by an even narrower rear portion so as to expose all or significant portion of the buttocks of the user. due to many different brief models it has been difficult in the prior art to optimize the shape and size of the panty liners such that a reliable protection is obtained while the panty liner is comfortable and discreet to wear.there have been several attempts in the prior art to solve problems with adapting the absorbent products to thong-type briefs. ep1757257 a2 and ep 1138294, respectively, disclose panty liners comprising a core which is adaptable to thong-type briefs. however, while these products may be adaptable to thong-type briefs, they do not provide an optimal comfort and feeling of secure protection when used with traditional briefs or with hipster-type briefs, since neither the shape of the absorbent product itself nor the shape of the core conforms to the anatomy of the user or is shaped to be adapted to that kind of underwear. thus, there is a need for an absorbent product that can be worn with different types of underwear while optimal comfortability and protection can be provided.summaryit is desired to provide an obtained absorbent product, such as a panty liner, where the previously mentioned problems are avoided. it is also desired to provide an absorbent product that can be worn with different types of underwear while optimal comfortability and protection can be provided.as used herein, the term "panty liner" means an absorbent product which is used for feminine hygiene and which is narrower than sanitary napkins. panty liners absorb less liquid than sanitary napkins and are thus aimed for light bodily discharge and for everyday cleanliness. the product disclosed herein includes a liquid-permeable top layer, a liquid-impermeable bottom layer and an absorbent core arranged between the top layer and the bottom layer. the absorbent core includes an absorbent material with absorbent characteristics and a superabsorbent material. the product has a first extension in a longitudinal direction and a second extension in a transverse direction. the product has a longitudinal central line extending through the product and located between a first longitudinal portion and a second longitudinal portion of the product. the first and second longitudinal portions are symmetrical about the longitudinal central line. the product has a head portion, an intermediate portion and a rear portion extending in a longitudinal direction of the product. the product has an outer contour having a shape resembling an hourglass, wherein the intermediate portion includes an area with a smaller width than any area in the head portion and rear portion, respectively. the core extends in the longitudinal direction and transverse direction of the product and has an outer contour that is asymmetrical with the outer contour of the product.the head portion of the product includes: a foremost point of the product in the longitudinal direction at the point where the central line of the product crosses the outer contour of the producta first product width extending between two opposing outermost points on the outer contour of the product in the transverse direction, the first product width being the broadest in the product anda first core width extending between two opposing outermost points of the outer contour of the core in the transverse direction, the first core width being the broadest in the core.the head portion transitions to the intermediate portion at intermediate transition points of the product and second transition points of the core. the core has a second core width in the transverse direction extending between two opposing second transition points of the core, the second width being smaller than the first core width.the intermediate portion of the product includes: a second product width extending between two opposing points in the area of the product having the smallest width, which second product width is longitudinally distanced from the second core width anda third core width extending between two opposing outermost points of the intermediate portion of the core, the third core width being broader than the second core width.the intermediate portion transitions to the rear portion at rear transition points of the product and at third transition points of the core.the rear portion of the product includes: a third product width which is broader than the second product width,a rear portion of the core tapering towards a rear end point which is longitudinally distanced from the rear end point of the product, and whereina point on the outer contour of the product, which has the largest distance to the outer contour of the core.by the feature of a point on the outer contour of the product having the largest distance to the outer contour of the core is meant that a perpendicular line that crosses a tangent of the point on the outer contour of the product and which perpendicular line crosses a point on the outer contour of the core has a largest distance in the rear portion of the product.one advantage with an absorbent product with the described shape is that it is suitable for use with most types of briefs, for instance thong-type briefs, traditional briefs and hipster-type briefs while optimal comfort and conformance to the wearer's body can be provided.the shape of the absorbent product has been found to fit the various widths of the crotch portions of for instance thong-type briefs, traditional briefs and hipster-type briefs while still providing a good absorption capacity, good coverage of the crotch portion of the underwear to avoid the undergarment to become soiled during use and comfort due to the shape of the core together with the shape of the complete product. the outer contour of the product follows the curvature of the crotch portion of the briefs. in the case of thong-type briefs or briefs with a tapering or narrow rear crotch portion, the shape of the product allows the rear portion of the product to be folded round the edges of the briefs, similar to a product with wings, in order to secure the product to the briefs. in the traditional briefs the absorbent product covers the crotch portion, while in the hipster-type briefs the absorbent product may extend out to the edges and beyond the

edges of the crotch portion of many hipster-type briefs.the core, having an asymmetrical shape compared with the shape of the outer contour of the product, i.e. which is not resembling an hourglass shape, is designed to follow the shape of the body and fit snugly between the thighs of the user. the absorbent product according to embodiments described herein, besides being suitable to wear with all kinds of briefs, protects the briefs from getting wet and is comfortable to the skin.the ratio of the thickness between the edge area of the product and the core is from 1:35 to 1:3. the thickness of the core is from 1.5 to 3.4 mm, or from 2.2 to 3.0 mm and the thickness of the edge area of the product is 0.1 to 0.3 mm. an absorbent product according to embodiments described herein has a high absorption capacity while being soft and comfortable against the skin of a user. the thin edge area ensures that it is easy to fold the edge area around the crotch portion of the briefs if necessary, it is less noticeable and due to its thinness creates high comfort to the wearer.a shape resembling an hourglass is a shape which is wide at the ends of the product and narrows towards the middle of the product. the shape resembling an hourglass may be a symmetric or essentially symmetric shape wide at its ends and narrow in the middle. the outer contour of the produ (Results 20)

1) Family number: 60818099 (US2017071799A) © PatBase

Title: ABSORBENT PRODUCT

Abstract: Source: US2017071799A An absorbent product including a liquid-permeable top layer, a liquid-impermeable bottom layer and an absorbent core arranged between the top layer and the bottom layer is disclosed. The absorbent product has a head product portion, an intermediate product portion and a rear product portion extending in a longitudinal direction of the absorbent product. The absorbent product has an outer contour having a shape resembling an hourglass, wherein the intermediate product portion includes an area with a smaller width than any area in the head product portion and rear product portion, respectively, and wherein the core extends in the longitudinal direction and transverse direction of the absorbent product and has an outer contour that is asymmetrical with the outer contour of the absorbent product.

Classifications:
International (IPC 8-9): A61F13/15 A61F13/45 A61F13/472 A61F13/511 A61F13/514 A61F13/53 A61F13/531 A61F13/533
A61F13/56 (Advanced/Invention);
A61F13/472 A61F13/531 (Advanced/Non-invention);
A61F13/45 A61F13/472 A61F13/531 (Core/Invention)
CPC: A61F13/53 A61F13/15203 A61F13/51121 A61F13/51405 A61F13/5605 A61F2013/530481 A61F2013/15373 A61F2013/5307 A61F2013/15422 A61F2013/530007 A61F2013/530802 A61F13/47245 A61F13/45 A61F13/472
US: 604/369

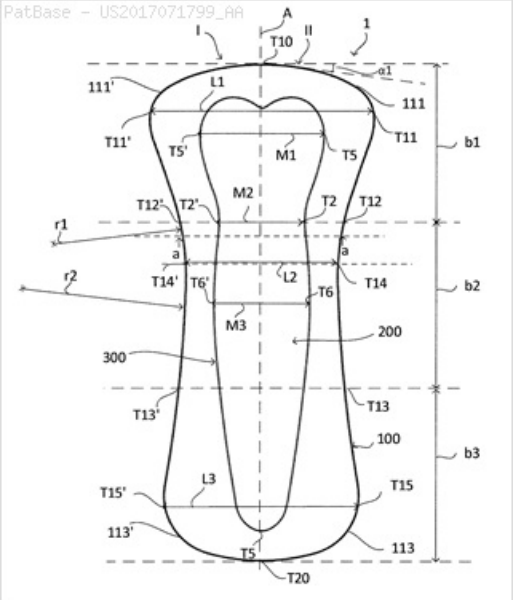

Family:

Publication number	Publication date	Application number	Application date
AU2014394158 AA	20151119	AU20140394158	20140515
AU2014394158 BB	20170202	AU20140394158	20140515
BR112016026078 A2	20170815	BR20161126078	20140515
CN106456397 A	20170222	CN201480078648	20140515
CO20160005096 A2	20170310	CO20160005096	20161207
EP3142618 A1	20170322	EP20140891809	20140515
EP3142618 A4	20171101	EP20140891809	20140515
IN201617041366 A	20170303	IN201617041366	20161202
JP2017515571 T2	20170615	JP20160567037T	20140515
MX2016014611 A1	20170306	MX20160014611	20140515
RU2644100 C1	20180207	RU20160147942	20140515
TH167386 A	20170907	TH20161006714	20140515
US2017071799 AA	20170316	US20140308849	20140515
US9889049 BB	20180213	US20140308849	20140515
WO15174896 A1	20151119	WO2014SE50589	20140515

Priority:
WO2014SE50589 20140515

Probable Assignee: SCA HYGIENE PRODUCTS AB

Assignee(s): (std): SCA HYGIENE PROD AB ; SCA HYGIENE PRODUCTS AB

Inventor(s): (std): ANGELICA BURVALL ; BURVALL ANGELICA ; HOERLE MAGDALENA ; HORLE MAGDALENA ; MAGDALENA HOERLE

Agent(s): WATERMARK PATENT AND TRADE MARKS ATTORNEYS; WATERMARK INTELLECTUAL PROPERTY PTY LTD; JOSE ANDRES RINCON USCATEGUI; ZACCO SWEDEN AB; OOO YURIDICHESKAYA GORODISSKIJ I PARTNERY FA; DRINKER BIDDLE AND REATH LLP; ZACCO SWEDEN AB ET AL

Designated states: AE AG AL AM AO AT AU AZ BA BB BE BF BG BH BJ BN BR BW BY BZ CA CF CG CH CI CL CM CN CO CR CU CY CZ DE DK DM DO DZ EC EE EG ES FI FR GA GB GD GE GH GM GN GQ GR GT GW HN HR HU ID IE IL IN IR IS IT JP KE KG KM KN KP KR KZ LA LC LI LK LR LS LT LU LV LY MA MC MD ME MG MK ML MN MR MT MW MX MY MZ NA NE NG NI NL NO NZ OM PA PE PG PH PL PT QA RO RS RU RW SA SC SD SE SG SI SK SL SM SN ST SV SY SZ TD TG TH TJ TM TN TR TT TZ UA UG US UZ VC VN ZA ZM ZW

Legal status (INPADOC)

View legal status timeline

Patent	Date recorded	Event group	Code	Event	Details
AU2014394158 AA	20151119	LSPB	+	published /	

				reissued	
AU2014394158 AA	20170601	LSGT	+FGA	LETTERS PATENT SEALED OR GRANTED (STANDARD PATENT)	
AU2014394158 BB	20170202	LSGT	+	granted / extensions (spc, cpc, pte)	
AU2014394158 BB	20340515	PEXP		Calculated Patent Term Expiry	
CN106456397 A	20170222	LSPB	+	published / reissued	
CN106456397 A	20170222	LSPB	+C06	PUBLICATION	
CO20160005096 A2	20170310	LSPB	+	published / reissued	
EP3142618 A1	20170322	LSPB	+	published / reissued	
EP3142618 A1	20170322	LSES	+17P	REQUEST FOR EXAMINATION FILED	EFFECTIVE DATE : 20161107
EP3142618 A4	20171101	LSES	+A4	DESPATCH OF SUPPLEMENTARY SEARCH REPORT	EFFECTIVE DATE : 20171004
EP3142618 A4	20171101	LSRE	RIC1	CLASSIFICATION (CORRECTION)	CLASSIFICATIONSCHEME : IPC CLASSIFICATIONSYMBOL : A61F 13/531 20060101ALI20170927BHEP
EP3142618 A4	20171101	LSRE	RIC1	CLASSIFICATION (CORRECTION)	CLASSIFICATIONSCHEME : IPC CLASSIFICATIONSYMBOL : A61F 13/472 20060101ALI20170927BHEP
EP3142618 A4	20171101	LSRE	RIC1	CLASSIFICATION (CORRECTION)	CLASSIFICATIONSCHEME : IPC CLASSIFICATIONSYMBOL : A61F 13/45 20060101AFI20170927BHEP
IN201617041366 A	20170303	LSPB	+	published / reissued	
JP2017515571 T2	20170615	LSPB	+	published / reissued	
JP2017515571 T2	20170925	LSES	-A131	NOTIFICATION OF REASONS FOR REFUSAL	TEXT : JAPANESE INTERMEDIATE CODE: A131 EFFECTIVE DATE : 20170925
JP2017515571 T2	20171218	LSRE	A521	WRITTEN AMENDMENT	TEXT : JAPANESE INTERMEDIATE CODE: A523 EFFECTIVE DATE : 20171218
MX2016014611 A1	20170306	LSPB	+	published / reissued	
RU2644100 C1	20180207	LSGT	+	granted / extensions (spc, cpc, pte)	
RU2644100 C1	20340515	PEXP		Calculated Patent Term Expiry	
TH167386 A	20170907	LSPB	+	published / reissued	
US2017071799 AA	20170316	LSPB	+	published / reissued	
US2017071799 AA	20161104	LSAS	AS	ASSIGNMENT	PARTYTYPE : OWNER OWNER : SCA HYGIENE PRODUCTS AB, SWEDEN OLDPARTY : ASSIGNMENT OF ASSIGNORS INTEREST; ASSIGNORS:HOERLE, MAGDALENA; BURVALL, ANGELICA; SIGNING DATES FROM 20160901 TO 20160905; REEL/FRAME:040221/0510
US2017071799 AA	20170407	LSES	NFA1	Non Final Action Mailed	
US2017071799 AA	20171019	LSES	+NAM1	Notice of Allowance Mailed -- Application Received in	

				Office of Publications	
US2017071799 AA	20171201	LSFE	-AWA4	Awaiting TC Resp., Issue Fee Not Paid	
US2017071799 AA	20171229	LSFE	+PPR1	Publications -- Issue Fee Payment Received	
US2017071799 AA	20180102	LSFE	+PPV1	Publications -- Issue Fee Payment Verified	
US9889049 BB	20180213	LSGT	+	granted / extensions (spc, cpc, pte)	
US9889049 BB	20340515	PEXP		Calculated Patent Term Expiry	
WO15174896 A1	20151119	LSPB	+	published / reissued	
WO15174896 A1	20161104	LSNP	+WWE	WIPO INFORMATION: ENTRY INTO NATIONAL PHASE	REF DOCUMENT NUMBER : 15308849 COUNTRY OF REF DOCUMENT : US
WO15174896 A1	20161107	LSNP	ENP	ENTRY INTO THE NATIONAL PHASE IN:	REF DOCUMENT NUMBER : 2016567037 COUNTRY OF REF DOCUMENT : JP KIND CODE OF REF DOCUMENT : A DESIGNATED STATE(S) :
WO15174896 A1	20161115	LSNE	NENP	NON-ENTRY INTO THE NATIONAL PHASE IN:	REF COUNTRY CODE : DE
WO15174896 A1	20161117	LSNP	ENP	ENTRY INTO THE NATIONAL PHASE IN:	REF DOCUMENT NUMBER : 2014394158 COUNTRY OF REF DOCUMENT : AU DATE OF REF DOCUMENT : 20140515 KIND CODE OF REF DOCUMENT : A DESIGNATED STATE(S) :
WO15174896 A1	20161215	LSNP	ENP	ENTRY INTO THE NATIONAL PHASE IN:	REF DOCUMENT NUMBER : 2016147942 COUNTRY OF REF DOCUMENT : RU KIND CODE OF REF DOCUMENT : A DESIGNATED STATE(S) :
WO15174896 A1	20170815	LSNP	ENP	ENTRY INTO THE NATIONAL PHASE IN:	REF DOCUMENT NUMBER : 112016026078 COUNTRY OF REF DOCUMENT : BR KIND CODE OF REF DOCUMENT : A2 DESIGNATED STATE(S) : EFFECTIVE DATE : 20161108

2) Family number: 60818101 (US2017071798A) © PatBase

Title: ABSORBENT CORE

Abstract: Source: US2017071798A An absorbent core, intended for use in an absorbent product such as a panty liner, is disclosed, comprising an absorbent material and a superabsorbent material. The core has a first extension in a longitudinal direction and a second extension in a transverse direction, and a longitudinal central line extending through the core, located between a first longitudinal portion and a second longitudinal portion. The first and second longitudinal portions are symmetric about the longitudinal central line. The core has a head portion, an intermediate portion and a rear portion extending in a longitudinal direction of the core. The head portion includes mirror imaged first circular segment portions and first edge lines to which the circular segment portions transition. The intermediate portion includes mirror imaged first convex edge portions. The rear portion includes second edge lines tapering towards a rear end and the central line of the core in an angle.

Classifications:
International (IPC 8-9): A61F13/15 A61F13/45 A61F13/472 A61F13/53 A61F13/531 B29C43/24 (Advanced/Invention);
A61F13/47 B29K1/00 B29L31/48 (Advanced/Non-invention);
A61F13/45 (Core/Invention)
CPC: A61F13/53 A61F13/15617 A61F13/15804 B29C43/24 A61F2013/530481 A61F2013/530007 A61F2013/530802 A61F2013/4708 A61F13/47245 B29K2001/00 B29L2031/4878 A61F13/45 A61F13/472
US: 604/369

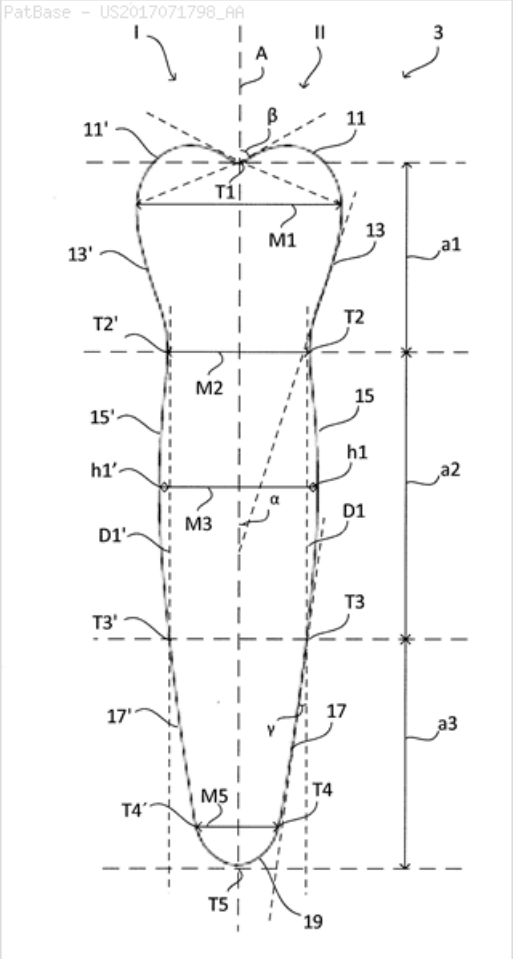

Family:

Publication number	Publication date	Application number	Application date
AU2014394157 AA	20151119	AU20140394157	20140515
AU2014394157 BB	20170112	AU20140394157	20140515
BR112016026077 A2	20170815	BR20161126077	20140515
CN106456398 A	20170222	CN201480078691	20140515
CO20160005094 A2	20170310	CO20160005094	20161207
EP3142619 A1	20170322	EP20140892150	20140515
EP3142619 A4	20171122	EP20140892150	20140515
IN201617041711 A	20170310	IN201617041711	20161206
JP2017518795 T2	20170713	JP20160566956T	20140515
MX2016014608 A1	20170220	MX20160014608	20140515
RU2643607 C1	20180202	RU20160148184	20140515
TH167385 A	20170907	TH20161006713	20140515
US2017071798 AA	20170316	US20140308847	20140515
US9889048 BB	20180213	US20140308847	20140515
WO15174895 A1	20151119	WO2014SE50588	20140515

Priority:

WO2014SE50588 20140515

Probable Assignee: SCA HYGIENE PRODUCTS AB

Assignee(s): (std): SCA HYGIENE PROD AB ; SCA HYGIENE PRODUCTS AB

Inventor(s): (std): ANGELICA BURVALL ; HORLE MAGDALENA ; MAGDALENA HOERLE ; HOERLE MAGDALENA ; BURVALL ANGELICA

Inventor(s): HA RLE MAGDALENA

Agent(s): WATERMARK PATENT AND TRADE MARKS ATTORNEYS; WATERMARK INTELLECTUAL PROPERTY PTY LTD; JOSE ANDRES RINCON USCATEGUI; ZACCO SWEDEN AB; OOO YURIDICHESKAYA GORODISSKIJ I PARTNERY FA; DRINKER BIDDLE AND REATH LLP; ZACCO SWEDEN AB ET AL

Designated states: AE AG AL AM AO AT AU AZ BA BB BE BF BG BH BJ BN BR BW BY BZ CA CF CG CH CI CL CM CN CO CR CU CY CZ DE DK DM DO DZ EC EE EG ES FI FR GA GB GD GE GH GM GN GQ GR GT GW HN HR HU ID IE IL IN IR IS IT JP KE KG KM KN KP KR KZ LA LC LI LK LR LS LT LU LV LY MA MC MD ME MG MK ML MN MR MT MW MX MY MZ NA NE NG NI NL NO NZ OM PA PE PG PH PL PT QA RO RS RU RW SA SC SD SE SG SI SK SL SM SN ST SV SY SZ TD TG TH TJ TM TN TR TT TZ UA UG US UZ VC VN ZA ZM ZW

Legal status (INPADOC)

View legal status timeline

Patent	Date recorded	Event group	Code	Event	Details
AU2014394157 AA	20151119	LSPB	+	published / reissued	
AU2014394157 AA	20170511	LSGT	+FGA	LETTERS PATENT SEALED OR GRANTED (STANDARD PATENT)	
AU2014394157 BB	20170112	LSGT	+	granted / extensions (spc, cpc, pte)	
AU2014394157 BB	20340515	PEXP		Calculated Patent Term Expiry	
CN106456398 A	20170222	LSPB	+	published / reissued	
CN106456398 A	20170222	LSPB	+C06	PUBLICATION	
CO20160005094 A2	20170310	LSPB	+	published / reissued	
EP3142619 A1	20170322	LSPB	+	published / reissued	
EP3142619 A1	20170322	LSES	+17P	REQUEST FOR EXAMINATION FILED	EFFECTIVE DATE : 20161107
EP3142619 A4	20171122	LSES	+A4	DESPATCH OF SUPPLEMENTARY SEARCH REPORT	EFFECTIVE DATE : 20171024
EP3142619 A4	20171122	LSRE	RIC1	CLASSIFICATION (CORRECTION)	CLASSIFICATIONSCHEME : IPC CLASSIFICATIONSYMBOL : A61F 13/531 20060101ALI20171018BHEP
EP3142619 A4	20171122	LSRE	RIC1	CLASSIFICATION (CORRECTION)	CLASSIFICATIONSCHEME : IPC CLASSIFICATIONSYMBOL : A61F 13/45 20060101AFI20171018BHEP
EP3142619 A4	20171122	LSRE	RIC1	CLASSIFICATION (CORRECTION)	CLASSIFICATIONSCHEME : IPC CLASSIFICATIONSYMBOL : A61F 13/472 20060101ALI20171018BHEP
IN201617041711 A	20170310	LSPB	+	published / reissued	
JP2017518795 T2	20170713	LSPB	+	published / reissued	
JP2017518795 T2	20171030	LSES	-A131	NOTIFICATION OF REASONS FOR REFUSAL	TEXT : JAPANESE INTERMEDIATE CODE: A131 EFFECTIVE DATE : 20171030
JP2017518795 T2	20180130	LSRE	A521	WRITTEN AMENDMENT	TEXT : JAPANESE INTERMEDIATE CODE: A523 EFFECTIVE DATE : 20180130
MX2016014608 A1	20170220	LSPB	+	published / reissued	
RU2643607 C1	20180202	LSGT	+	granted / extensions (spc, cpc, pte)	
RU2643607 C1	20340515	PEXP		Calculated Patent Term Expiry	
TH167385 A	20170907	LSPB	+	published / reissued	

US2017071798 AA	20170316	LSPB	+	published / reissued	
US2017071798 AA	20161104	LSAS	AS	ASSIGNMENT	PARTYTYPE : OWNER OWNER : SCA HYGIENE PRODUCTS AB, SWEDEN OLDPARTY : ASSIGNMENT OF ASSIGNORS INTEREST; ASSIGNORS:HOERLE, MAGDALENA; BURVALL, ANGELICA; SIGNING DATES FROM 20160901 TO 20160905; REEL/FRAME:040221/0333
US2017071798 AA	20170517	LSES	NFA1	Non Final Action Mailed	
US2017071798 AA	20171024	LSES	+ALW2	Allowed -- Notice of Allowance Not Yet Mailed	
US2017071798 AA	20171025	LSES	+NAM1	Notice of Allowance Mailed -- Application Received in Office of Publications	
US2017071798 AA	20171104	LSFE	-AWA4	Awaiting TC Resp., Issue Fee Not Paid	
US2017071798 AA	20171108	LSES	+NAM1	Notice of Allowance Mailed -- Application Received in Office of Publications	
US2017071798 AA	20171130	LSFE	-AWA4	Awaiting TC Resp., Issue Fee Not Paid	
US2017071798 AA	20171221	LSES	+NAM1	Notice of Allowance Mailed -- Application Received in Office of Publications	
US2017071798 AA	20171229	LSFE	+PPR1	Publications -- Issue Fee Payment Received	
US2017071798 AA	20180102	LSFE	+PPV1	Publications -- Issue Fee Payment Verified	
US9889048 BB	20180213	LSGT	+	granted / extensions (spc, cpc, pte)	
US9889048 BB	20340515	PEXP		Calculated Patent Term Expiry	
WO15174895 A1	20151119	LSPB	+	published / reissued	
WO15174895 A1	20161020	LSNP	ENP	ENTRY INTO THE NATIONAL PHASE IN:	REF DOCUMENT NUMBER : 2014394157 COUNTRY OF REF DOCUMENT : AU DATE OF REF DOCUMENT : 20140515 KIND CODE OF REF DOCUMENT : A DESIGNATED STATE(S) :
WO15174895 A1	20161104	LSNP	+WWE	WIPO INFORMATION: ENTRY INTO NATIONAL PHASE	REF DOCUMENT NUMBER : 15308847 COUNTRY OF REF DOCUMENT : US
WO15174895 A1	20161107	LSNP	ENP	ENTRY INTO THE NATIONAL PHASE IN:	REF DOCUMENT NUMBER : 2016566956 COUNTRY OF REF DOCUMENT : JP KIND CODE OF REF DOCUMENT : A DESIGNATED STATE(S) :
WO15174895 A1	20161115	LSNE	NENP	NON-ENTRY INTO THE NATIONAL PHASE IN:	REF COUNTRY CODE : DE
WO15174895 A1	20161215	LSNP	ENP	ENTRY INTO THE NATIONAL PHASE IN:	REF DOCUMENT NUMBER : 2016148184 COUNTRY OF REF DOCUMENT : RU KIND CODE OF REF DOCUMENT : A DESIGNATED STATE(S) :

WO15174895 A1	20170815	LSNP	ENP	ENTRY INTO THE NATIONAL PHASE IN:	REF DOCUMENT NUMBER : 112016026077 COUNTRY OF REF DOCUMENT : BR KIND CODE OF REF DOCUMENT : A2 DESIGNATED STATE(S) : EFFECTIVE DATE : 20161108

3) Family number: 13467066 (US6908456B) © PatBase

Title: Absorbent article with main absorbing part in front portion

Abstract: Source: US6908456B The invention relates to an absorbent product with a longitudinal direction and a transverse direction, two side edges extending essentially in the longitudinal direction, a front portion, a rear portion, a first surface and a second surface, and an absorption body arranged between the first surface and the second surface. The absorbent product is essentially triangular in shape, the front portion being wider than the rear portion. The absorption body also has a main absorption part which is shaped and positioned in such a manner in the plane of the product that at least 85 percent of the total absorption capacity of the product is in the front three quarters of the length of the product and at least 70 percent of the absorption capacity is found in the front half of the product.

Classifications:
International (IPC 8-9): A61F13/15 A61F13/472 A61F13/535 A61L15/16 (Advanced/Invention);
A61F13/15 A61L15/16 (Core/Invention)
International (IPC 1-7): A61F13/15 A61F13/472 A61F13/53 A61F13/535 A61L15/16
CPC: A61F13/47254 A61F13/476 A61F13/532 A61F13/535
European: A61F13/472C1B A61F13/476 A61F13/532 A61F13/535
US: 604/385.01 604/385.03 604/385.04 604/385.101

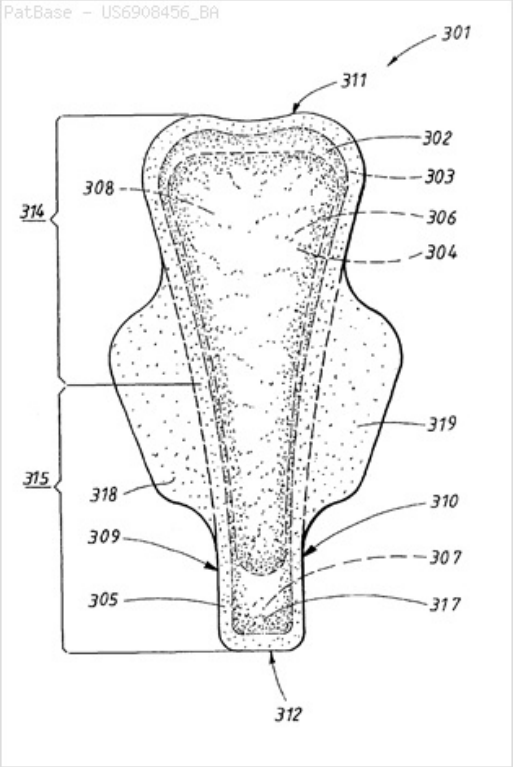

Family:

Publication number	Publication date	Application number	Application date
AR026440 AA	20030212	AR2000P105958	20001110
AT291406 E	20050415	AT20000978177T	20001117
AU200115662 A1	20010530	AU20010015662	20001117
AU200115662 A5	20010530	AU20010015662D	20001117
CL2000003190 A1	20011108	CL20000003190	20001117
CO5180602 A1	20020730	CO20000087791	20001117
DE60018976 D1	20050428	DE20006018976	20001117
DE60018976 T2	20060323	DE20006018976T	20001117
DE60018976 T8	20060608	DE20006018976T	20001117
DK1244408 T3	20050711	DK20000978177T	20001117
EP1244408 A1	20021002	EP20000978177	20001117
EP1244408 B1	20050323	EP20000978177	20001117
ES2239049 T3	20050916	ES20000978177T	20001117
FR2801195 A3	20010525	FR20000014898	20001117
FR2801195 B3	20011102	FR20000014898	20001117
MXPA02003878 A1	20021023	MX2002PA03878	20001117
PE06532001 A1	20010622	PE20000001161	20001030
PL206555 B1	20100831	PL20000355509	20001117
PL355509 A1	20040504	PL20000355509	20001117
RU2002116219 A	20040227	RU20020116219	20001117
RU2259810 C2	20050910	RU20020116219	20001117
SE9904198 A	20010519	SE19990004198D	19991118
SE9904198 A0	19991118	SE19990004198	19991118
SE9904198 L	20010519	SE19990004198	19991118
SK200200502 A5	20020806	SK20020000502	20001117
TNSN00220 A1	20030403	TN2000SN00220	20001117
TNSN00220 A1	20020530	TN2000SN00220	20001117
US6908456 BA	20050621	US20020130424	20020710
WO0135888 A1	20010525	WO2000SE02258	20001117

Priority:

SE19990004198 19991118 WO2000SE02258 20001117

Probable Assignee: SCA HYGIENE PRODUCTS AB

Assignee(s): (std): DREVIK SOLGUN ; SCA HYGIENE PROD AB ; SCA HYGIENE PRODUCTS AB

Assignee(s): SCA HYGIENE PRODUCTS AB GOETEBORG GOTENBURG ; SCA HYGIENE PRODUCTS S AB

Inventor(s): (std): DREVIK SOL GUN ; SOLGUN DREVIK ; DREVIK SOLGUN

Inventor(s): DREVIK SOL'GUN

Agent(s): HARNECKER; ERNESTO CAVELIER; BURNS DOANE SWECKER AND MATHIS LLP

Designated states: AE AG AL AM AT AU AZ BA BB BE BF BG BJ BR BY BZ CA CF CG CH CI CM CN CR CU CY CZ DE DK DM DZ EE ES FI FR GA GB GD GE GH GM GN GR GW HR HU ID IE IL IN IS IT JP KE KG KP KR KZ LC LI LK LR LS LT LU LV MA MC MD MG MK ML MN MR MW MX MZ NE NL NO NZ PL PT RO RU SD SE SG SI SK SL SN SZ TD TG TJ TM TR TT TZ UA UG US UZ VN YU ZA ZW

Legal status (INPADOC)

View legal status timeline

Patent	Date recorded	Event group	Code	Event	Details
AR026440 AA	20030212	LSPB	+	published / reissued	
AR026440 AA	20040205	LSWD	-FB	SUSPENSION OF GRANTING PROCEDURE	
AT291406 E	20050415	LSGT	+	granted / extensions (spc, cpc, pte)	
AT291406 E	20050915	LSLE	-RER	CEASED AS TO PARAGRAPH 5 LIT. 3 LAW INTRODUCING PATENT TREATIES	
AT291406 E	20201117	PEXP		Calculated Patent Term Expiry	
AU200115662 A1	20010530	LSPB	+	published / reissued	
CL2000003190 A1	20011108	LSPB	+	published / reissued	
CO5180602 A1	20020730	LSPB	+	published / reissued	
CO5180602 A1	20060228	LSGT	+FG	APPLICATION GRANTED	
DE60018976 D1	20060511	LSGT	+8364	NO OPPOSITION DURING TERM OF OPPOSITION	
DE60018976 T2	20060323	LSGT	+	granted / extensions (spc, cpc, pte)	
DE60018976 T2	20201117	PEXP		Calculated Patent Term Expiry	
DK1244408 T3	20050711	LSGT	+	granted / extensions (spc, cpc, pte)	
DK1244408 T3	20201117	PEXP		Calculated Patent Term Expiry	
EP1244408 A1	20021002	LSPB	+	published / reissued	
EP1244408 A1	20021002	LSES	+17P	REQUEST FOR EXAMINATION FILED	EFFECTIVE DATE : 20020410
EP1244408 A1	20040526	LSES	+17Q	FIRST EXAMINATION REPORT	EFFECTIVE DATE : 20040414
EP1244408 A1	20170131	LSFE	+PGFP	POSTGRANT: ANNUAL FEES PAID TO NATIONAL OFFICE	COUNTRY OF REF DOCUMENT : DE PAYMENT DATE : 20161108 YEAR OF FEE PAYMENT : 17
EP1244408 B1	20050323	LSGT	+	granted / extensions (spc, cpc, pte)	
EP1244408 B1	20050323	LSLE	-PG25	LAPSED IN A CONTRACTING STATE ANNOUNCED VIA POSTGRANT INFORM. FROM NAT. OFFICE TO EPO	COUNTRY OF REF DOCUMENT : AT NOTIFICATIONOFLAPSE : LAPSE BECAUSE OF FAILURE TO SUBMIT A TRANSLATION OF THE DESCRIPTION OR TO PAY THE FEE WITHIN THE PRESCRIBED TIME-LIMIT LAPSED DATE : 20050323
EP1244408 B1	20050323	LSLE	-PG25	LAPSED IN A CONTRACTING STATE ANNOUNCED VIA POSTGRANT INFORM. FROM NAT. OFFICE TO EPO	COUNTRY OF REF DOCUMENT : BE NOTIFICATIONOFLAPSE : LAPSE BECAUSE OF FAILURE TO SUBMIT A TRANSLATION OF THE DESCRIPTION OR TO PAY THE FEE WITHIN THE PRESCRIBED TIME-LIMIT LAPSED DATE : 20050323

EP1244408 B1	20050323	LSLE	-PG25	LAPSED IN A CONTRACTING STATE ANNOUNCED VIA POSTGRANT INFORM. FROM NAT. OFFICE TO EPO	COUNTRY OF REF DOCUMENT : CH NOTIFICATIONOFLAPSE : LAPSE BECAUSE OF FAILURE TO SUBMIT A TRANSLATION OF THE DESCRIPTION OR TO PAY THE FEE WITHIN THE PRESCRIBED TIME-LIMIT LAPSED DATE : 20050323
EP1244408 B1	20050323	LSLE	-PG25	LAPSED IN A CONTRACTING STATE ANNOUNCED VIA POSTGRANT INFORM. FROM NAT. OFFICE TO EPO	COUNTRY OF REF DOCUMENT : FI NOTIFICATIONOFLAPSE : LAPSE BECAUSE OF FAILURE TO SUBMIT A TRANSLATION OF THE DESCRIPTION OR TO PAY THE FEE WITHIN THE PRESCRIBED TIME-LIMIT LAPSED DATE : 20050323
EP1244408 B1	20050323	LSLE	-PG25	LAPSED IN A CONTRACTING STATE ANNOUNCED VIA POSTGRANT INFORM. FROM NAT. OFFICE TO EPO	COUNTRY OF REF DOCUMENT : LI NOTIFICATIONOFLAPSE : LAPSE BECAUSE OF FAILURE TO SUBMIT A TRANSLATION OF THE DESCRIPTION OR TO PAY THE FEE WITHIN THE PRESCRIBED TIME-LIMIT LAPSED DATE : 20050323
EP1244408 B1	20050323	LSLE	-PG25	LAPSED IN A CONTRACTING STATE ANNOUNCED VIA POSTGRANT INFORM. FROM NAT. OFFICE TO EPO	COUNTRY OF REF DOCUMENT : TR NOTIFICATIONOFLAPSE : LAPSE BECAUSE OF FAILURE TO SUBMIT A TRANSLATION OF THE DESCRIPTION OR TO PAY THE FEE WITHIN THE PRESCRIBED TIME-LIMIT LAPSED DATE : 20050323
EP1244408 B1	20050323	LSGT	REG	REFERENCE TO A NATIONAL CODE	REF COUNTRY CODE : GB REF LEGAL EVENT CODE : FG4D
EP1244408 B1	20050331	LSNP	REG	REFERENCE TO A NATIONAL CODE	REF COUNTRY CODE : CH REF LEGAL EVENT CODE : EP
EP1244408 B1	20050420	LSGT	REG	REFERENCE TO A NATIONAL CODE	REF COUNTRY CODE : IE REF LEGAL EVENT CODE : FG4D
EP1244408 B1	20050623	LSLE	-PG25	LAPSED IN A CONTRACTING STATE ANNOUNCED VIA POSTGRANT INFORM. FROM NAT. OFFICE TO EPO	COUNTRY OF REF DOCUMENT : GR NOTIFICATIONOFLAPSE : LAPSE BECAUSE OF FAILURE TO SUBMIT A TRANSLATION OF THE DESCRIPTION OR TO PAY THE FEE WITHIN THE PRESCRIBED TIME-LIMIT LAPSED DATE : 20050623
EP1244408 B1	20050907	LSLE	-PG25	LAPSED IN A CONTRACTING STATE ANNOUNCED VIA POSTGRANT INFORM. FROM NAT. OFFICE TO EPO	COUNTRY OF REF DOCUMENT : PT NOTIFICATIONOFLAPSE : LAPSE BECAUSE OF FAILURE TO SUBMIT A TRANSLATION OF THE DESCRIPTION OR TO PAY THE FEE WITHIN THE PRESCRIBED TIME-LIMIT LAPSED DATE : 20050907
EP1244408 B1	20050916	LSGT	REG	REFERENCE TO A NATIONAL CODE	REF COUNTRY CODE : ES REF LEGAL EVENT CODE : FG2A REF DOCUMENT NUMBER : 2239049 COUNTRY OF REF DOCUMENT : ES KIND CODE OF REF DOCUMENT : T3 DESIGNATED STATE(S) :
EP1244408 B1	20050930	LSLE	REG	REFERENCE TO A NATIONAL CODE	REF COUNTRY CODE : CH REF LEGAL EVENT CODE : PL
EP1244408 B1	20051117	LSLE	-PG25	LAPSED IN A CONTRACTING STATE ANNOUNCED VIA POSTGRANT INFORM. FROM NAT. OFFICE TO EPO	COUNTRY OF REF DOCUMENT : CY NOTIFICATIONOFLAPSE : LAPSE BECAUSE OF FAILURE TO SUBMIT A TRANSLATION OF THE DESCRIPTION OR TO PAY THE FEE WITHIN THE PRESCRIBED TIME-LIMIT LAPSED DATE : 20051117
EP1244408 B1	20051117	LSLE	-PG25	LAPSED IN A CONTRACTING STATE ANNOUNCED VIA POSTGRANT INFORM. FROM NAT. OFFICE TO EPO	COUNTRY OF REF DOCUMENT : IE NOTIFICATIONOFLAPSE : LAPSE BECAUSE OF NON-PAYMENT OF DUE FEES LAPSED DATE : 20051117

EP1244408 B1	20051118	LSLE	-PG25	LAPSED IN A CONTRACTING STATE ANNOUNCED VIA POSTGRANT INFORM. FROM NAT. OFFICE TO EPO	COUNTRY OF REF DOCUMENT : ES NOTIFICATIONOFLAPSE : LAPSE BECAUSE OF NON-PAYMENT OF DUE FEES LAPSED DATE : 20051118
EP1244408 B1	20051118	LSLE	-PG25	LAPSED IN A CONTRACTING STATE ANNOUNCED VIA POSTGRANT INFORM. FROM NAT. OFFICE TO EPO	COUNTRY OF REF DOCUMENT : SE NOTIFICATIONOFLAPSE : LAPSE BECAUSE OF NON-PAYMENT OF DUE FEES LAPSED DATE : 20051118
EP1244408 B1	20051130	LSLE	-PG25	LAPSED IN A CONTRACTING STATE ANNOUNCED VIA POSTGRANT INFORM. FROM NAT. OFFICE TO EPO	COUNTRY OF REF DOCUMENT : LU NOTIFICATIONOFLAPSE : LAPSE BECAUSE OF NON-PAYMENT OF DUE FEES LAPSED DATE : 20051130
EP1244408 B1	20051130	LSLE	-PG25	LAPSED IN A CONTRACTING STATE ANNOUNCED VIA POSTGRANT INFORM. FROM NAT. OFFICE TO EPO	COUNTRY OF REF DOCUMENT : MC NOTIFICATIONOFLAPSE : LAPSE BECAUSE OF NON-PAYMENT OF DUE FEES LAPSED DATE : 20051130
EP1244408 B1	20060315	LSGT	+26N	NO OPPOSITION FILED	EFFECTIVE DATE : 20051227
EP1244408 B1	20060601	LSLE	-PG25	LAPSED IN A CONTRACTING STATE ANNOUNCED VIA POSTGRANT INFORM. FROM NAT. OFFICE TO EPO	COUNTRY OF REF DOCUMENT : NL NOTIFICATIONOFLAPSE : LAPSE BECAUSE OF NON-PAYMENT OF DUE FEES LAPSED DATE : 20060601
EP1244408 B1	20060725	LSLE	-EUG	SE: EUROPEAN PATENT HAS LAPSED	REF COUNTRY CODE : EP
EP1244408 B1	20060801	LSLE	-NLV4	NL: LAPSED OR ANULLED DUE TO NON-PAYMENT OF THE ANNUAL FEE	REF COUNTRY CODE : EP EFFECTIVE DATE : 20060601
EP1244408 B1	20060906	LSLE	REG	REFERENCE TO A NATIONAL CODE	REF COUNTRY CODE : IE REF LEGAL EVENT CODE : MM4A
EP1244408 B1	20070216	LSLE	REG	REFERENCE TO A NATIONAL CODE	REF COUNTRY CODE : ES REF LEGAL EVENT CODE : FD2A EFFECTIVE DATE : 20051118
EP1244408 B1	20090331	LSFE	+PGFP	POSTGRANT: ANNUAL FEES PAID TO NATIONAL OFFICE	COUNTRY OF REF DOCUMENT : IT PAYMENT DATE : 20081125 YEAR OF FEE PAYMENT : 9
EP1244408 B1	20100129	LSFE	+PGFP	POSTGRANT: ANNUAL FEES PAID TO NATIONAL OFFICE	COUNTRY OF REF DOCUMENT : DK PAYMENT DATE : 20091125 YEAR OF FEE PAYMENT : 10
EP1244408 B1	20100730	LSFE	+PGFP	POSTGRANT: ANNUAL FEES PAID TO NATIONAL OFFICE	COUNTRY OF REF DOCUMENT : FR PAYMENT DATE : 20100527 YEAR OF FEE PAYMENT : 10
EP1244408 B1	20110331	LSLE	-PG25	LAPSED IN A CONTRACTING STATE ANNOUNCED VIA POSTGRANT INFORM. FROM NAT. OFFICE TO EPO	COUNTRY OF REF DOCUMENT : IT NOTIFICATIONOFLAPSE : LAPSE BECAUSE OF NON-PAYMENT OF DUE FEES LAPSED DATE : 20091117
EP1244408 B1	20110711	LSLE	REG	REFERENCE TO A NATIONAL CODE	REF COUNTRY CODE : DK REF LEGAL EVENT CODE : EBP
EP1244408 B1	20110819	LSLE	REG	REFERENCE TO A NATIONAL CODE	REF COUNTRY CODE : FR REF LEGAL EVENT CODE : ST EFFECTIVE DATE : 20110801
EP1244408 B1	20111031	LSLE	-PG25	LAPSED IN A CONTRACTING STATE ANNOUNCED VIA POSTGRANT INFORM. FROM NAT. OFFICE TO EPO	COUNTRY OF REF DOCUMENT : FR NOTIFICATIONOFLAPSE : LAPSE BECAUSE OF NON-PAYMENT OF DUE FEES LAPSED DATE : 20101130
EP1244408 B1	20111031	LSLE	-PG25	LAPSED IN A CONTRACTING STATE ANNOUNCED VIA POSTGRANT INFORM. FROM NAT. OFFICE TO EPO	COUNTRY OF REF DOCUMENT : DK NOTIFICATIONOFLAPSE : LAPSE BECAUSE OF NON-PAYMENT OF DUE FEES LAPSED DATE : 20101130
EP1244408 B1	20170131	LSFE	+PGFP	POSTGRANT: ANNUAL FEES PAID TO	COUNTRY OF REF DOCUMENT : GB PAYMENT DATE : 20161116

				NATIONAL OFFICE	YEAR OF FEE PAYMENT : 17
EP1244408 B1	20180131	LSFE	+PGFP	POSTGRANT: ANNUAL FEES PAID TO NATIONAL OFFICE	COUNTRY OF REF DOCUMENT : DE PAYMENT DATE : 20171114 YEAR OF FEE PAYMENT : 18
EP1244408 B1	20201117	PEXP		Calculated Patent Term Expiry	
ES2239049 T3	20050916	LSGT	+	granted / extensions (spc, cpc, pte)	
ES2239049 T3	20201117	PEXP		Calculated Patent Term Expiry	
FR2801195 A3	20010525	LSPB	+	published / reissued	
FR2801195 B3	20011102	LSGT	+	granted / extensions (spc, cpc, pte)	
FR2801195 B3	20061117	PEXP		Calculated Patent Term Expiry	
MXPA02003878 A1	20021023	LSPB	+	published / reissued	
MXPA02003878 A1	20090703	LSGT	+FG	GRANT OR REGISTRATION	
PE06532001 A1	20010622	LSPB	+	published / reissued	
PE06532001 A1	20030530	LSRV	-FC	REFUSAL	
PL206555 B1	20100831	LSGT	+	granted / extensions (spc, cpc, pte)	
PL206555 B1	20110429	LSRE	RECP	RECTIFICATIONS OF PATENT SPECIFICATION	
PL355509 A1	20040504	LSPB	+	published / reissued	
RU2002116219 A	20040227	LSPB	+	published / reissued	
RU2259810 C2	20050910	LSGT	+	granted / extensions (spc, cpc, pte)	
RU2259810 C2	20201117	PEXP		Calculated Patent Term Expiry	
SE9904198 A	20010519	LSPB	+	published / reissued	
SE9904198 A	20031216	LSLE	-NAV	PATENT APPLICATION HAS LAPSED	
SE9904198 L	20031216	LSLE	-NAV	PATENT APPLICATION HAS LAPSED	
SK200200502 A5	20020806	LSPB	+	published / reissued	
TNSN00220 A1	20020530	LSPB	+	published / reissued	
TNSN00220 A1	20030403	LSPB	+	published / reissued	
US6908456 BA	20050621	LSGT	+	granted / extensions (spc, cpc, pte)	
US6908456 BA	20020710	LSAS	AS	ASSIGNMENT	PARTYTYPE : OWNER OWNER : SCA HYGIENE PRODUCTS AB, SWEDEN OLDPARTY : ASSIGNMENT OF ASSIGNORS INTEREST; ASSIGNOR:DREVIK, SOLGUN; REEL/FRAME:013074/0545 EFFECTIVE DATE : 20020521
US6908456 BA	20050601	LSGT	PAT1	Patented Case	
US6908456 BA	20081122	LSFE	+FPAY	FEE PAYMENT	YEAR OF FEE PAYMENT : 4
US6908456 BA	20121213	LSFE	+FPAY	FEE PAYMENT	YEAR OF FEE PAYMENT : 8
US6908456 BA	20161208	LSFE	+FPAY	FEE PAYMENT	YEAR OF FEE PAYMENT : 12
US6908456 BA	20230819	PEXP		Calculated Patent Term Expiry (PTA 405 days)	
WO0135888 A1	20010525	LSPB	+	published / reissued	
WO0135888 A1	20020410	LSNP	+WWE	WIPO INFORMATION: ENTRY INTO NATIONAL PHASE	REF DOCUMENT NUMBER : 2000978177 COUNTRY OF REF DOCUMENT : EP
WO0135888 A1	20020412	LSNP	+WWE	WIPO INFORMATION: ENTRY INTO	REF DOCUMENT NUMBER : 5022002 COUNTRY OF REF DOCUMENT : SK

				NATIONAL PHASE	
WO0135888 A1	20020418	LSNP	+WWE	WIPO INFORMATION: ENTRY INTO NATIONAL PHASE	REF DOCUMENT NUMBER : PA/A/2002/003878 COUNTRY OF REF DOCUMENT : MX
WO0135888 A1	20020618	LSNP	ENP	ENTRY INTO THE NATIONAL PHASE IN:	REF DOCUMENT NUMBER : 2002 2002116219 COUNTRY OF REF DOCUMENT : RU KIND CODE OF REF DOCUMENT : A DESIGNATED STATE(S) :
WO0135888 A1	20020710	LSNP	+WWE	WIPO INFORMATION: ENTRY INTO NATIONAL PHASE	REF DOCUMENT NUMBER : 10130424 COUNTRY OF REF DOCUMENT : US
WO0135888 A1	20021002	LSPB	+WWP	WIPO INFORMATION: PUBLISHED IN NATIONAL OFFICE	REF DOCUMENT NUMBER : 2000978177 COUNTRY OF REF DOCUMENT : EP
WO0135888 A1	20021031	LSWD	REG	REFERENCE TO NATIONAL CODE	REF COUNTRY CODE : DE REF LEGAL EVENT CODE : 8642
WO0135888 A1	20050323	LSGT	+WWG	WIPO INFORMATION: GRANT IN NATIONAL OFFICE	REF DOCUMENT NUMBER : 2000978177 COUNTRY OF REF DOCUMENT : EP

4) Family number: 15316062 (US5792129A) © PatBase

Title: Sanitary napkin

Abstract: Source: US5792129A PCT No. PCT/SE94/00933 Sec. 371 Date Mar. 20, 1996 Sec. 102(e) Date Mar. 20, 1996 PCT Filed Oct. 6, 1994 PCT Pub. No. WO95/09592 PCT Pub. Date Apr. 13, 1995The present invention relates to a sanitary napkin or like absorbent article, such as a sanitary pantie or incontinence guard, comprising an absorbent body (8) which is enclosed between a fluid-permeable (15) and a fluid-impermeable casing sheet (17). According to the invention, the absorbent body (8) comprises a primary absorbent body (9) having the capacity to absorb all fluid discharged from a user over an intended article use period, and a secondary absorbent body (10) whose area is at least 50 percent larger than the area of the primary absorbent body.

Classifications:
International (IPC 8-9): A61F13/15 A61F13/534
A61F13/72 (Advanced/Invention);
A61F13/15 A61F13/56 (Core/Invention)
International (IPC 1-7): A41B9/04 A41B9/04 A61F13/15 A61F13/46
CPC: A61F13/472 A61F13/47245 A61F13/47254 A61F13/47263 A61F13/47272 A61F13/49011 A61F13/491 A61F13/496 A61F13/51478 A61F13/534 A61F13/535 A61F13/53704 A61F13/72 A61F2013/49026 A61F2013/49031 A61F2013/51409 A61F2013/51411 A61F2013/53734 A61F2013/53782 A61F2013/53786
European: A61F13/472 A61F13/472C1 A61F13/472C1B A61F13/472D A61F13/472E A61F13/491 A61F13/496 A61F13/535 A61F13/72 K61F13/49D2B K61F13/49D2H2A K61F13/49D2H3 K61F13/514A4 K61F13/514A4A K61F13/514C2 K61F13/534 K61F13/537A K61F13/537B5C K61F13/537E4 K61F13/537E5
US: 604/378 604/385.23 604/387

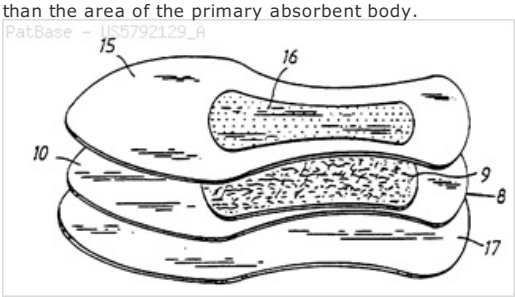

Family:

Publication number	Publication date	Application number	Application date
AT189597 E	20000215	AT19940929088T	19941006
AU199478273 A1	19950501	AU19940078273	19941006
AU686244 B2	19980205	AU19940078273	19941006
CA2172057 AA	19960318	CA19942172057	19941006
CO4290336 A1	19960417	CO19940045733	19941006
CZ288268 B6	20010516	CZ19960000985	19941006
CZ9600985 A3	19960717	CZ19960000985	19941006
DE69423011 D1	20000316	DE19946023011	19941006
DE69423011 T2	20000914	DE19946023011T	19941006
DK0776186 T3	20000724	DK19940929088T	19941006
EP0776186 A1	19970604	EP19940929088	19941006
EP0776186 B1	20000209	EP19940929088	19941006
ES2145156 T3	20000701	ES19940929088T	19941006
GB2282541 A1	19950412	GB19940018770	19940916
GB2282541 B2	19971008	GB19940018770	19940916
GB9418770 A0	19941102	GB19940018770	19940916
HU76696 A2	19971028	HU19960000849	19941006
HU9600849 A0	19960528	HU19960000849	19941006
JP9504195 T2	19970428	JP19950510762T	19941006
NZ274287 A	19980226	NZ19940274287	19941006
PL176086 B1	19990430	PL19940313784	19941006
PL313784 A1	19960722	PL19940313784	19941006
SE507964 C2	19980803	SE19930003284	19931007
SE9303284 A	19950408	SE19930003284	19931007
SE9303284 A0	19931007	SE19930003284	19931007
SE9303284 L	19950408	SE19930003284	19931007
SK282417 B6	20020107	SK19960000377	19941006
SK37796 A3	19970205	SK19960000377	19941006
TNSN94098 A1	19950425	TN1994SN00098	19941005
US5792129 A	19980811	US19960604974	19960320
WO9509592 A1	19950413	WO1994SE00933	19941006
WO9509592 C1	20010426	WO1994SE00933	19941006
ZA9407085 A	19950503	ZA19940007085	19940914

Priority:

SE19930003284 19931007 WO1994SE00933 19941006

Probable Assignee: SCA HYGIENE PRODUCTS AKTIEBOLAG

Assignee(s): (std): HANSSON ROY ; JOHANSSON KERSTIN ; M TM LNLYCKE AB ; MOELNLYCKE AB ; SCA HYGIENE PROD AB ; SCA HYGIENE PRODUCTS AKTIEBOLA ; SCA HYGIENE PRODUCTS AKTIEBOLAG ; SCA HYGIENE PRODUCTS AB ; SCA MOELNLYCKE AB

Assignee(s): SCA HYGIENE PRODUCTS AB GOETEBORG ; SCA MOLNLYCKE AB ; SCA HYGIENE PRODUCTS AKTIEBOLAGS ; SCA HYGIENE PRODUCTS AKTIENBOLAGS ; SCA HYGIENE PRODUCTS AKTIENBOLAG ; MOLNLYCKE AB ; MOLNLYCKE ABS

Inventor(s): (std): HANSSON ROY ; JOHANSSON KERSTIN ; KERSTIN JOHANSSON ; ROY HANSSON

Agent(s): WATERMARK PATENT AND TRADE MARKS ATTORNEYS; WATERMARK INTELLECTUAL PROPERTY PTY LTD; FETHERSTONHAUGH AND CO; ERNESTO CAVELIER

Designated states: AT AU BE CA CH CZ DE DK ES FR GB GR HU IE IT JP LI LU MC NL NZ PL PT SE SK US

Legal status (INPADOC)

View legal status timeline

Patent	Date recorded	Event group	Code	Event	Details
AT189597 E	20000215	LSGT	+	granted / extensions (spc, cpc, pte)	
AT189597 E	20141006	PEXP		Calculated Patent Term Expiry	
AU199478273 A1	19950501	LSPB	+	published / reissued	
AU686244 B2	19980205	LSGT	+	granted / extensions (spc, cpc, pte)	
AU686244 B2	20141006	PEXP		Calculated Patent Term Expiry	
CA2172057 AA	19960318	LSPB	+	published / reissued	
CA2172057 AA	20021007	LSLE	-FZDE	DEAD	
CO4290336 A1	19960417	LSPB	+	published / reissued	
CZ288268 B6	20010516	LSGT	+	granted / extensions (spc, cpc, pte)	
CZ288268 B6	20030618	LSLE	-MM4A	Lapse of patent due to failure of payment of fees	EFFECTIVE DATE : 20021006
CZ288268 B6	20141006	PEXP		Calculated Patent Term Expiry	
CZ9600985 A3	19960717	LSPB	+	published / reissued	
DE69423011 T2	20000914	LSGT	+	granted / extensions (spc, cpc, pte)	
DE69423011 T2	20141006	PEXP		Calculated Patent Term Expiry	
DK0776186 T3	20000724	LSGT	+	granted / extensions (spc, cpc, pte)	
DK0776186 T3	20141006	PEXP		Calculated Patent Term Expiry	
EP0776186 A1	19970604	LSPB	+	published / reissued	
EP0776186 A1	19970604	LSES	+17P	REQUEST FOR EXAMINATION FILED	EFFECTIVE DATE : 19960330
EP0776186 A1	19971112	LSES	+17Q	FIRST EXAMINATION REPORT	EFFECTIVE DATE : 19970926
EP0776186 A1	19990922	LSAS	RAP1	TRANSFER OF RIGHTS OF AN APPLICATION	PARTYTYPE : OWNER OWNER : SCA HYGIENE PRODUCTS AB
EP0776186 B1	20000209	LSGT	+	granted / extensions (spc, cpc, pte)	
EP0776186 B1	20000209	LSLE	-PG25	LAPSED IN A CONTRACTING STATE ANNOUNCED VIA POSTGRANT INFORM. FROM NAT. OFFICE TO EPO	COUNTRY OF REF DOCUMENT : GR NOTIFICATIONOFLAPSE : LAPSE BECAUSE OF NON-PAYMENT OF DUE FEES LAPSED DATE : 20000209
EP0776186 B1	20000209	LSLE	-PG25	LAPSED IN A CONTRACTING STATE ANNOUNCED VIA POSTGRANT INFORM. FROM NAT. OFFICE TO EPO	COUNTRY OF REF DOCUMENT : AT NOTIFICATIONOFLAPSE : LAPSE BECAUSE OF FAILURE TO SUBMIT A TRANSLATION OF THE DESCRIPTION OR TO PAY THE FEE WITHIN THE PRESCRIBED TIME-LIMIT LAPSED DATE : 20000209
EP0776186 B1	20000209	LSLE	-PG25	LAPSED IN A CONTRACTING STATE ANNOUNCED VIA POSTGRANT INFORM. FROM NAT. OFFICE TO EPO	COUNTRY OF REF DOCUMENT : BE NOTIFICATIONOFLAPSE : LAPSE BECAUSE OF FAILURE TO SUBMIT A TRANSLATION OF THE DESCRIPTION OR TO PAY THE FEE WITHIN THE PRESCRIBED TIME-LIMIT LAPSED DATE : 20000209
EP0776186 B1	20000209	LSLE	-PG25	LAPSED IN A CONTRACTING STATE ANNOUNCED VIA POSTGRANT INFORM. FROM NAT. OFFICE TO EPO	COUNTRY OF REF DOCUMENT : CH NOTIFICATIONOFLAPSE : LAPSE BECAUSE OF FAILURE TO SUBMIT A TRANSLATION OF THE DESCRIPTION OR TO PAY THE FEE WITHIN THE PRESCRIBED TIME-LIMIT LAPSED DATE : 20000209
EP0776186 B1	20000209	LSLE	-PG25	LAPSED IN A	COUNTRY OF REF DOCUMENT : LI

				CONTRACTING STATE ANNOUNCED VIA POSTGRANT INFORM. FROM NAT. OFFICE TO EPO	NOTIFICATIONOFLAPSE : LAPSE BECAUSE OF FAILURE TO SUBMIT A TRANSLATION OF THE DESCRIPTION OR TO PAY THE FEE WITHIN THE PRESCRIBED TIME-LIMIT LAPSED DATE : 20000209
EP0776186 B1	20000215	LSNP	REG	REFERENCE TO A NATIONAL CODE	REF COUNTRY CODE : CH REF LEGAL EVENT CODE : EP
EP0776186 B1	20000503	LSGT	REG	REFERENCE TO A NATIONAL CODE	REF COUNTRY CODE : IE REF LEGAL EVENT CODE : FG4D
EP0776186 B1	20000509	LSLE	-PG25	LAPSED IN A CONTRACTING STATE ANNOUNCED VIA POSTGRANT INFORM. FROM NAT. OFFICE TO EPO	COUNTRY OF REF DOCUMENT : PT NOTIFICATIONOFLAPSE : LAPSE BECAUSE OF FAILURE TO SUBMIT A TRANSLATION OF THE DESCRIPTION OR TO PAY THE FEE WITHIN THE PRESCRIBED TIME-LIMIT LAPSED DATE : 20000509
EP0776186 B1	20000701	LSGT	REG	REFERENCE TO A NATIONAL CODE	REF COUNTRY CODE : ES REF LEGAL EVENT CODE : FG2A REF DOCUMENT NUMBER : 2145156 COUNTRY OF REF DOCUMENT : ES KIND CODE OF REF DOCUMENT : T3 DESIGNATED STATE(S) :
EP0776186 B1	20000815	LSLE	REG	REFERENCE TO A NATIONAL CODE	REF COUNTRY CODE : CH REF LEGAL EVENT CODE : PL
EP0776186 B1	20001006	LSLE	-PG25	LAPSED IN A CONTRACTING STATE ANNOUNCED VIA POSTGRANT INFORM. FROM NAT. OFFICE TO EPO	COUNTRY OF REF DOCUMENT : IE NOTIFICATIONOFLAPSE : LAPSE BECAUSE OF NON-PAYMENT OF DUE FEES LAPSED DATE : 20001006
EP0776186 B1	20010103	LSOP	-26	OPPOSITION FILED	PARTYTYPE : OPPONENT OPPONENT : PAUL HARTMANN AKTIENGESELLSCHAFT EFFECTIVE DATE : 20001108
EP0776186 B1	20010110	LSOP	-26	OPPOSITION FILED	PARTYTYPE : OPPONENT OPPONENT : PAUL HARTMANN AKTIENGESELLSCHAFT EFFECTIVE DATE : 20001108
EP0776186 B1	20010110	LSOP	-26	OPPOSITION FILED	PARTYTYPE : OPPONENT OPPONENT : KIMBERLY-CLARK WORLDWIDE, INC. EFFECTIVE DATE : 20001109
EP0776186 B1	20010301	LSOP	-NLR1	NL: OPPOSITION HAS BEEN FILED WITH THE EPO	PARTYTYPE : OPPONENT REF COUNTRY CODE : EP OPPONENT : PAUL HARTMANN AKTIENGESELLSCHAFT
EP0776186 B1	20010301	LSOP	-NLR1	NL: OPPOSITION HAS BEEN FILED WITH THE EPO	PARTYTYPE : OPPONENT REF COUNTRY CODE : EP OPPONENT : KIMBERLY-CLARK WORLDWIDE, INC.
EP0776186 B1	20010808	LSLE	REG	REFERENCE TO A NATIONAL CODE	REF COUNTRY CODE : IE REF LEGAL EVENT CODE : MM4A
EP0776186 B1	20100129	LSFE	+PGFP	POSTGRANT: ANNUAL FEES PAID TO NATIONAL OFFICE	COUNTRY OF REF DOCUMENT : DE PAYMENT DATE : 20091027 YEAR OF FEE PAYMENT : 16
EP0776186 B1	20100129	LSFE	+PGFP	POSTGRANT: ANNUAL FEES PAID TO NATIONAL OFFICE	COUNTRY OF REF DOCUMENT : DK PAYMENT DATE : 20091027 YEAR OF FEE PAYMENT : 16
EP0776186 B1	20100129	LSFE	+PGFP	POSTGRANT: ANNUAL FEES PAID TO NATIONAL OFFICE	COUNTRY OF REF DOCUMENT : ES PAYMENT DATE : 20091022 YEAR OF FEE PAYMENT : 16
EP0776186 B1	20100129	LSFE	+PGFP	POSTGRANT: ANNUAL FEES PAID TO NATIONAL OFFICE	COUNTRY OF REF DOCUMENT : SE PAYMENT DATE : 20091026 YEAR OF FEE PAYMENT : 16
EP0776186 B1	20100224	LSRV	-27W	PATENT REVOKED	EFFECTIVE DATE : 20091018
EP0776186 B1	20100430	LSFE	+PGFP	POSTGRANT: ANNUAL	COUNTRY OF REF DOCUMENT : FR

				FEES PAID TO NATIONAL OFFICE	PAYMENT DATE : 20091110 YEAR OF FEE PAYMENT : 16
EP0776186 B1	20100430	LSFE	+PGFP	POSTGRANT: ANNUAL FEES PAID TO NATIONAL OFFICE	COUNTRY OF REF DOCUMENT : IT PAYMENT DATE : 20091022 YEAR OF FEE PAYMENT : 16
EP0776186 B1	20110131	LSFE	+PGFP	POSTGRANT: ANNUAL FEES PAID TO NATIONAL OFFICE	COUNTRY OF REF DOCUMENT : NL PAYMENT DATE : 20101015 YEAR OF FEE PAYMENT : 17
EP0776186 B1	20141006	PEXP		Calculated Patent Term Expiry	
ES2145156 T3	20000701	LSGT	+	granted / extensions (spc, cpc, pte)	
ES2145156 T3	20000701	LSGT	+FG2A	DEFINITIVE PROTECTION	REF DOCUMENT NUMBER : 776186 COUNTRY OF REF DOCUMENT : ES
ES2145156 T3	20141006	PEXP		Calculated Patent Term Expiry	
GB2282541 A1	19950412	LSPB	+	published / reissued	
GB2282541 B2	19971008	LSGT	+	granted / extensions (spc, cpc, pte)	
GB2282541 B2	20110525	LSLE	-PCNP	PATENT CEASED THROUGH NON-PAYMENT OF RENEWAL FEE	EFFECTIVE DATE : 20100916
GB2282541 B2	20140916	PEXP		Calculated Patent Term Expiry	
HU76696 A2	19971028	LSPB	+	published / reissued	
HU9600849 A0	20020228	LSRV	DFC4	CANCELLATION OF TEMPORARY PROT. DUE TO REFUSAL	
JP9504195 T2	19970428	LSPB	+	published / reissued	
JP9504195 T2	20040603	LSRE	A521	WRITTEN AMENDMENT	TEXT : JAPANESE INTERMEDIATE CODE: A523 EFFECTIVE DATE : 20040514
JP9504195 T2	20040713	LSRV	-A02	DECISION OF REFUSAL	TEXT : JAPANESE INTERMEDIATE CODE: A02 EFFECTIVE DATE : 20040713
NZ274287 A	19980226	LSPB	+	published / reissued	
NZ274287 A	20011026	LSFE	+RENW	RENEWAL (RENEWAL FEES ACCEPTED)	
NZ274287 A	20041029	LSFE	+RENW	RENEWAL (RENEWAL FEES ACCEPTED)	
NZ274287 A	20071026	LSFE	+RENW	RENEWAL (RENEWAL FEES ACCEPTED)	
NZ274287 A	20141031	LSLE	-EXPY	PATENT EXPIRED	
PL176086 B1	19990430	LSGT	+	granted / extensions (spc, cpc, pte)	
PL176086 B1	20131129	LSLE	-LAPS	DECISIONS ON THE LAPSE OF THE PROTECTION RIGHTS	EFFECTIVE DATE : 20121006
PL313784 A1	19960722	LSPB	+	published / reissued	
SE507964 C2	19980803	LSGT	+	granted / extensions (spc, cpc, pte)	
SE507964 C2	20131007	PEXP		Calculated Patent Term Expiry	
SE9303284 A	19950408	LSPB	+	published / reissued	
SK282417 B6	20020107	LSGT	+	granted / extensions (spc, cpc, pte)	
SK282417 B6	20110706	LSLE	-MM4A	PATENT LAPSED DUE TO NON-PAYMENT OF MAINTENANCE FEES	EFFECTIVE DATE : 20101006
SK282417 B6	20141006	PEXP		Calculated Patent Term Expiry	
SK37796 A3	19970205	LSPB	+	published / reissued	
TNSN94098 A1	19950425	LSPB	+	published / reissued	

US5792129 A	19980811	LSGT	+	granted / extensions (spc, cpc, pte)	
US5792129 A	19960322	LSAS	AS	ASSIGNMENT	PARTYTYPE : OWNER OWNER : MOLNLYCKE AB, SWEDEN OLDPARTY : ASSIGNMENT OF ASSIGNORS INTEREST; ASSIGNORS:JOHANSSON, KERSTIN; HANSSON, ROY; REEL/FRAME:008002/0032 EFFECTIVE DATE : 19960306
US5792129 A	19980806	LSGT	PAT1	Patented Case	
US5792129 A	19990222	LSAS	AS	ASSIGNMENT	PARTYTYPE : OWNER OWNER : SCA HYGIENE PRODUCTS AKTIENBOLAG, SWEDEN OLDPARTY : CHANGE OF NAME; ASSIGNOR:SCA MOLNLYKE AB; REEL/FRAME:009773/0264 EFFECTIVE DATE : 19980716
US5792129 A	19990223	LSAS	AS	ASSIGNMENT	PARTYTYPE : OWNER OWNER : SCA HYGIENE PRODUCTS AKTIEBOLAG, SWEDEN OLDPARTY : CHANGE OF NAME; ASSIGNOR:SCA MOLNLYCKE AB; REEL/FRAME:009773/0259 EFFECTIVE DATE : 19980716
US5792129 A	20020204	LSFE	+FPAY	FEE PAYMENT	YEAR OF FEE PAYMENT : 4
US5792129 A	20060207	LSFE	+FPAY	FEE PAYMENT	YEAR OF FEE PAYMENT : 8
US5792129 A	20100111	LSFE	+FPAY	FEE PAYMENT	YEAR OF FEE PAYMENT : 12
US5792129 A	20160320	PEXP		Calculated Patent Term Expiry	
WO9509592 A1	19950413	LSPB	+	published / reissued	
WO9509592 A1	19960314	LSNP	+WWE	WIPO INFORMATION: ENTRY INTO NATIONAL PHASE	REF DOCUMENT NUMBER : 274287 COUNTRY OF REF DOCUMENT : NZ
WO9509592 A1	19960318	LSNP	+WWE	WIPO INFORMATION: ENTRY INTO NATIONAL PHASE	REF DOCUMENT NUMBER : 2172057 COUNTRY OF REF DOCUMENT : CA
WO9509592 A1	19960320	LSNP	+WWE	WIPO INFORMATION: ENTRY INTO NATIONAL PHASE	REF DOCUMENT NUMBER : 08604974 COUNTRY OF REF DOCUMENT : US
WO9509592 A1	19960322	LSNP	+WWE	WIPO INFORMATION: ENTRY INTO NATIONAL PHASE	REF DOCUMENT NUMBER : 37796 COUNTRY OF REF DOCUMENT : SK
WO9509592 A1	19960330	LSNP	+WWE	WIPO INFORMATION: ENTRY INTO NATIONAL PHASE	REF DOCUMENT NUMBER : 1994929088 COUNTRY OF REF DOCUMENT : EP
WO9509592 A1	19960403	LSNP	+WWE	WIPO INFORMATION: ENTRY INTO NATIONAL PHASE	REF DOCUMENT NUMBER : PV1996-985 COUNTRY OF REF DOCUMENT : CZ
WO9509592 A1	19960717	LSPB	+WWP	WIPO INFORMATION: PUBLISHED IN NATIONAL OFFICE	REF DOCUMENT NUMBER : PV1996-985 COUNTRY OF REF DOCUMENT : CZ
WO9509592 A1	19970604	LSPB	+WWP	WIPO INFORMATION: PUBLISHED IN NATIONAL OFFICE	REF DOCUMENT NUMBER : 1994929088 COUNTRY OF REF DOCUMENT : EP
WO9509592 A1	20000209	LSGT	+WWG	WIPO INFORMATION: GRANT IN NATIONAL OFFICE	REF DOCUMENT NUMBER : 1994929088 COUNTRY OF REF DOCUMENT : EP
WO9509592 C1	20010426	LSRE	CR1	CORRECTION OF ENTRY IN SECTION I	
WO9509592 C1	20010516	LSGT	+WWG	WIPO INFORMATION: GRANT IN NATIONAL OFFICE	REF DOCUMENT NUMBER : PV1996-985 COUNTRY OF REF DOCUMENT : CZ
ZA9407085 A	19950503	LSGT	+	granted / extensions (spc, cpc, pte)	
ZA9407085 A	20140913	PEXP		Calculated Patent Term Expiry	

5) Family number: 15496728 (EP1138294A1) © PatBase

Title: Thong pantiliner with flaps

Abstract: Source: EP1138294A1 A pantiliner for use with thong underwear is disclosed and claimed. The pantiliner includes a pair of flaps extending from each side of the posterior portion of the pantiliner, at least one of said flaps being adjacent to the posterior end of the pantiliner.

Classifications:
International (IPC 8-9): A61F13/15 A61F13/476 A61F13/496
A61F13/56 (Advanced/Invention);
A61F13/476 (Advanced/Non-invention);
A61F13/15 (Core/Invention)
International (IPC 1-7): A61F13/15 A61F13/476 A61F13/496 A61F13/56
CPC: A61F13/47254 A61F13/476
European: A61F13/472C1B A61F13/476

PatBase - EP1138294_A1

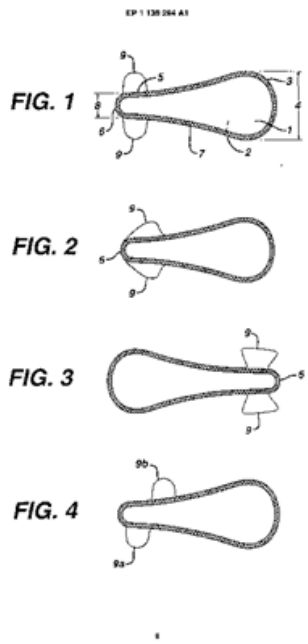

Family:

Publication number	Publication date	Application number	Application date
AR025336 AA	20021120	AR2000P104302	20000818
AT279893 E	20041115	AT20000117559T	20000815
AU200053422 A1	20011004	AU20000053422	20000815
AU200053422 A5	20011004	AU20000053422D	20000815
AU781484 B2	20050526	AU20000053422	20000815
BRPI0003883 A	20011127	BR2000PI03883	20000830
CA2318699 AA	20010929	CA20002318699	20000913
CN1204863 C	20050608	CN20001026255	20000825
CN1315168 A	20011003	CN20001026255	20000825
CO5121077 A1	20020130	CO20000062275	20000818
DE60015068 D1	20041125	DE20006015068	20000815
DE60015068 T2	20060216	DE20006015068T	20000815
DE60015068 T3	20090813	DE20006015068T	20000815
EP1138294 A1	20011004	EP20000117559	20000815
EP1138294 B1	20041020	EP20000117559	20000815
EP1138294 B2	20080611	EP20000117559	20000815
ES2230013 T3	20050501	ES20000117559T	20000815
ES2230013 T5	20081201	ES20000117559T	20000815
HK1040902 A1	20050708	HK20020102473	20020403
IN00459CA2000 A	20060217	IN2000CA00459	20000814
IN206858 B	20070518	IN2000CA00459	20000814
KR20010093621 A	20011029	KR20000049596	20000825
MXPA00008217 A1	20020424	MX2000PA08217	20000821
NZ506339 A	20020531	NZ20000506339	20000815
PT1138294 T	20050131	PT20000117559T	20000815
RU2000121928 A	20020827	RU20000121928	20000815
RU2257187 C2	20050727	RU20000121928	20000815
ZA200004163 A	20020215	ZA20000004163	20000815

Priority:

CA20002318699 20000913 US20000538010 20000329

Probable Assignee: MCNEIL PPC INC

Assignee(s): (std): MCNEIL PPC INC ; JOHNSON AND JOHNSON

Assignee(s): LUZANO JAMES ; MC NEIL PPC INC ; HAARER JUTTA S ; PROGLHOF IGOR PHILIP PASSOS ; NEUMANN DE CAMACHO MARIA MONIKA ; RIBEIRO DE CARVALHO ANTONIO CARLOS

Inventor(s): (std): ACR DEKAVALUE ; ANTONIO CARLOS RIBEIRO DE CARVALHO ; ANTONIO CARLOS RIBEIRO DE CARVOLHO ; CAMACHO MARIA MONIKA NEUMANN D ; CAMACHO MARIA MONIKA NEUMANN DE ; CARLOS RIBEIRO DE

CARVALHO ANT ; CARVALHO ANTONIO CARLOS RIBEIR ; CARVALHO ANTONIO CARLOS RIBEIRO DE ; CARVOLHO ANTONIO CARLOS RIBEIR ; DEKAMAJO M N N ; DEKAMAJO N N N ; DEKAVALUE A C R ; HAARER JUTTA S ; HAR J S ; IGOR PHILIP PASSOS PROGHLOF ; IGOR PHILIP PASSOS PROGLHOF ; JAMES LUZANO ; JS HAR ; JUTTA S HAARER ; LUZANO JAMES ; MARIA MONIKA NEUMANN DE CAMACHO ; MNN DEKAMAJO ; MONIKA NEUMANN DE CAMACHO MARI ; NEUMANN DE CAMACHO MARIA MONIK ; NEUMANN DE CAMACHO MARIA MONIKA ; NEUMANN DI KAMASHO MARIJA MONIKA ; NNN DEKAMAJO ; PHILIP PASSOS PROGLHOF IGOR ; PROGHLOF IGOR PHILIP PASSOS ; PROGLHOF IGOR PHILIP PASSOS ; PROGLHOF JAMES ; RIBEIRO DE CARVALHO ANTONIO CA ; RIBEIRO DE CARVALHO ANTONIO CARLOS ; RIBEIRO DE CARVOLHO ANTONIO CA ; RIBEJRO DI KARVAL O ANTONIO KARLOS ; RIBEJRO DI KARVAL O ANTONIO KA ; PASSOSPROGLHOF IGOR PHILIP ; PASSOS PROGL JUF IGOR FILIP ; NEUMANN DI KAMASHO MARIJA MONI ; PASSOS PROGHLOF IGOR PHILIP ; PASSOS PROGLHOF IGOR PHILIP ; LUZANO DZHEJMS ; KHARER DZHUTTA S ; DECARVALHO ANTONIO CARLOS RIBEIRO

Inventor(s): DE CARVALHO ANTONIO CARLOS RIBEIRO ; DE CAMACHO MARIA MONIKA NEUMANN ; CAMACHO DE NEUMANN MONIKA MARIA ; ANTONIO CARLOS RIBEIRO DECARVALHO ; A C R DEKAVALUE ; IGOR PHILIP PASSOSPROGLHOF ; PASSOS PROGL'JUF IGOR' FILIP ; M N N DEKAMAJO ; RIBEJRO DI KARVAL'O ANTONIO KARLOS ; N N N DEKAMAJO ; J S HAR ; DOS CAMPOS

Agent(s): SHELSTON IP; SHELSTON IP PTY LTD; SMART AND BIGGAR; IGNACIO ESCOBAR URIBE; METTEN KARL HEINZ ET AL

Designated states: AT BE CH CY DE DK ES FI FR GB GR IE IT LI LU MC NL PT SE

Legal status (INPADOC)

View legal status timeline

Patent	Date recorded	Event group	Code	Event	Details
AR025336 AA	20021120	LSPB	+	published / reissued	
AR025336 AA	20050318	LSGT	+FG	GRANT, REGISTRATION	
AT279893 E	20041115	LSGT	+	granted / extensions (spc, cpc, pte)	
AT279893 E	20050415	LSLE	-RER	CEASED AS TO PARAGRAPH 5 LIT. 3 LAW INTRODUCING PATENT TREATIES	
AT279893 E	20200815	PEXP		Calculated Patent Term Expiry	
AU200053422 A1	20011004	LSPB	+	published / reissued	
AU781484 B2	20050526	LSGT	+	granted / extensions (spc, cpc, pte)	
AU781484 B2	20200815	PEXP		Calculated Patent Term Expiry	
BRPI0003883 A	20011127	LSPB	+	published / reissued	
BRPI0003883 A	20071030	LSES	B07A	TECHNICAL EXAMINATION (OPINION): PUBLICATION OF TECHNICAL EXAMINATION (OPINION)	
BRPI0003883 A	20080520	LSRV	B09B	DECISION: REFUSAL	TEXT : INDEFIRO O PRESENTE PEDIDO COM BASE NO(S) ART.(S) 8O EM VISTA DO(S) ART.(S) 13 DA LEI DA PROPRIEDADE INDUSTRIAL NO 9.279 DE 14/05/1996.
CA2318699 AA	20010929	LSPB	+	published / reissued	
CA2318699 AA	20050826	LSES	+EEER	EXAMINATION REQUEST	
CA2318699 AA	20080606	LSLE	-FZDE	DEAD	
CN1204863 C	20050608	LSGT	+	granted / extensions (spc, cpc, pte)	
CN1204863 C	20050608	LSGT	+C14	GRANT OF PATENT OR UTILITY MODEL	
CN1204863 C	20131030	LSLE	-C17	CESSATION OF PATENT RIGHT	
CN1204863 C	20200825	PEXP		Calculated Patent Term Expiry	
CN1315168 A	20011003	LSPB	+	published / reissued	
CN1315168 A	20011003	LSPB	+C06	PUBLICATION	
CO5121077 A1	20020130	LSPB	+	published / reissued	
DE60015068 D1	20081218	LSOP	-8363	OPPOSITION AGAINST THE PATENT	

DE60015068 D1	20081218	LSOP	+8366	RESTRICTED MAINTAINED AFTER OPPOSITION PROCEEDINGS	
DE60015068 T2	20060216	LSGT	+	granted / extensions (spc, cpc, pte)	
DE60015068 T2	20200815	PEXP		Calculated Patent Term Expiry	
DE60015068 T3	20090813	LSGT	+	granted / extensions (spc, cpc, pte)	
DE60015068 T3	20200815	PEXP		Calculated Patent Term Expiry	
EP1138294 A1	20011004	LSPB	+	published / reissued	
EP1138294 A1	20020605	LSES	+17P	REQUEST FOR EXAMINATION FILED	EFFECTIVE DATE : 20020328
EP1138294 A1	20020626	LSFE	+AKX	PAYMENT OF DESIGNATION FEES	TEXT : AT BE CH CY DE DK ES FI FR GB GR IE IT LI LU MC NL PT SE
EP1138294 A1	20030709	LSES	+17Q	FIRST EXAMINATION REPORT	EFFECTIVE DATE : 20030521
EP1138294 A1	20040421	LSAS	RAP1	TRANSFER OF RIGHTS OF AN APPLICATION	PARTYTYPE : OWNER OWNER : MCNEIL-PPC, INC.
EP1138294 B1	20041020	LSGT	+	granted / extensions (spc, cpc, pte)	
EP1138294 B1	20041020	LSLE	-PG25	LAPSED IN A CONTRACTING STATE ANNOUNCED VIA POSTGRANT INFORM. FROM NAT. OFFICE TO EPO	COUNTRY OF REF DOCUMENT : AT NOTIFICATIONOFLAPSE : LAPSE BECAUSE OF FAILURE TO SUBMIT A TRANSLATION OF THE DESCRIPTION OR TO PAY THE FEE WITHIN THE PRESCRIBED TIME-LIMIT LAPSED DATE : 20041020
EP1138294 B1	20041020	LSLE	-PG25	LAPSED IN A CONTRACTING STATE ANNOUNCED VIA POSTGRANT INFORM. FROM NAT. OFFICE TO EPO	COUNTRY OF REF DOCUMENT : BE NOTIFICATIONOFLAPSE : LAPSE BECAUSE OF FAILURE TO SUBMIT A TRANSLATION OF THE DESCRIPTION OR TO PAY THE FEE WITHIN THE PRESCRIBED TIME-LIMIT LAPSED DATE : 20041020
EP1138294 B1	20041020	LSLE	-PG25	LAPSED IN A CONTRACTING STATE ANNOUNCED VIA POSTGRANT INFORM. FROM NAT. OFFICE TO EPO	COUNTRY OF REF DOCUMENT : FI NOTIFICATIONOFLAPSE : LAPSE BECAUSE OF FAILURE TO SUBMIT A TRANSLATION OF THE DESCRIPTION OR TO PAY THE FEE WITHIN THE PRESCRIBED TIME-LIMIT LAPSED DATE : 20041020
EP1138294 B1	20041020	LSGT	REG	REFERENCE TO A NATIONAL CODE	REF COUNTRY CODE : GB REF LEGAL EVENT CODE : FG4D
EP1138294 B1	20041029	LSNP	REG	REFERENCE TO A NATIONAL CODE	REF COUNTRY CODE : CH REF LEGAL EVENT CODE : EP
EP1138294 B1	20041117	LSGT	REG	REFERENCE TO A NATIONAL CODE	REF COUNTRY CODE : IE REF LEGAL EVENT CODE : FG4D
EP1138294 B1	20050120	LSLE	-PG25	LAPSED IN A CONTRACTING STATE ANNOUNCED VIA POSTGRANT INFORM. FROM NAT. OFFICE TO EPO	COUNTRY OF REF DOCUMENT : DK NOTIFICATIONOFLAPSE : LAPSE BECAUSE OF FAILURE TO SUBMIT A TRANSLATION OF THE DESCRIPTION OR TO PAY THE FEE WITHIN THE PRESCRIBED TIME-LIMIT LAPSED DATE : 20050120
EP1138294 B1	20050120	LSLE	-PG25	LAPSED IN A CONTRACTING STATE ANNOUNCED VIA POSTGRANT INFORM. FROM NAT. OFFICE TO EPO	COUNTRY OF REF DOCUMENT : GR NOTIFICATIONOFLAPSE : LAPSE BECAUSE OF FAILURE TO SUBMIT A TRANSLATION OF THE DESCRIPTION OR TO PAY THE FEE WITHIN THE PRESCRIBED TIME-LIMIT LAPSED DATE : 20050120
EP1138294 B1	20050120	LSLE	-PG25	LAPSED IN A CONTRACTING STATE ANNOUNCED VIA POSTGRANT INFORM.	COUNTRY OF REF DOCUMENT : SE NOTIFICATIONOFLAPSE : LAPSE BECAUSE OF FAILURE TO SUBMIT A TRANSLATION OF THE

				FROM NAT. OFFICE TO EPO	DESCRIPTION OR TO PAY THE FEE WITHIN THE PRESCRIBED TIME-LIMIT LAPSED DATE : 20050120
EP1138294 B1	20050501	LSGT	REG	REFERENCE TO A NATIONAL CODE	REF COUNTRY CODE : ES REF LEGAL EVENT CODE : FG2A REF DOCUMENT NUMBER : 2230013 COUNTRY OF REF DOCUMENT : ES KIND CODE OF REF DOCUMENT : T3 DESIGNATED STATE(S) :
EP1138294 B1	20050708	LSGT	REG	REFERENCE TO A NATIONAL CODE	REF COUNTRY CODE : HK REF LEGAL EVENT CODE : GR REF DOCUMENT NUMBER : 1040902 COUNTRY OF REF DOCUMENT : HK
EP1138294 B1	20050815	LSLE	-PG25	LAPSED IN A CONTRACTING STATE ANNOUNCED VIA POSTGRANT INFORM. FROM NAT. OFFICE TO EPO	COUNTRY OF REF DOCUMENT : IE NOTIFICATIONOFLAPSE : LAPSE BECAUSE OF NON-PAYMENT OF DUE FEES LAPSED DATE : 20050815
EP1138294 B1	20050815	LSLE	-PG25	LAPSED IN A CONTRACTING STATE ANNOUNCED VIA POSTGRANT INFORM. FROM NAT. OFFICE TO EPO	COUNTRY OF REF DOCUMENT : LU NOTIFICATIONOFLAPSE : LAPSE BECAUSE OF NON-PAYMENT OF DUE FEES LAPSED DATE : 20050815
EP1138294 B1	20050815	LSLE	-PG25	LAPSED IN A CONTRACTING STATE ANNOUNCED VIA POSTGRANT INFORM. FROM NAT. OFFICE TO EPO	COUNTRY OF REF DOCUMENT : CY NOTIFICATIONOFLAPSE : LAPSE BECAUSE OF FAILURE TO SUBMIT A TRANSLATION OF THE DESCRIPTION OR TO PAY THE FEE WITHIN THE PRESCRIBED TIME-LIMIT LAPSED DATE : 20050815
EP1138294 B1	20050831	LSLE	-PG25	LAPSED IN A CONTRACTING STATE ANNOUNCED VIA POSTGRANT INFORM. FROM NAT. OFFICE TO EPO	COUNTRY OF REF DOCUMENT : MC NOTIFICATIONOFLAPSE : LAPSE BECAUSE OF NON-PAYMENT OF DUE FEES LAPSED DATE : 20050831
EP1138294 B1	20050914	LSOP	-26	OPPOSITION FILED	PARTYTYPE : OPPONENT OPPONENT : SCA HYGIENE PRODUCTS AB EFFECTIVE DATE : 20050705
EP1138294 B1	20051101	LSOP	-NLR1	NL: OPPOSITION HAS BEEN FILED WITH THE EPO	PARTYTYPE : OPPONENT REF COUNTRY CODE : EP OPPONENT : SCA HYGIENE PRODUCTS AB
EP1138294 B1	20060517	LSLE	REG	REFERENCE TO A NATIONAL CODE	REF COUNTRY CODE : IE REF LEGAL EVENT CODE : MM4A
EP1138294 B1	20060803	LSFE	+PGFP	POSTGRANT: ANNUAL FEES PAID TO NATIONAL OFFICE	COUNTRY OF REF DOCUMENT : NL PAYMENT DATE : 20060803 YEAR OF FEE PAYMENT : 7
EP1138294 B1	20060803	LSFE	+PGFP	POSTGRANT: ANNUAL FEES PAID TO NATIONAL OFFICE	COUNTRY OF REF DOCUMENT : PT PAYMENT DATE : 20060803 YEAR OF FEE PAYMENT : 7
EP1138294 B1	20060815	LSFE	+PGFP	POSTGRANT: ANNUAL FEES PAID TO NATIONAL OFFICE	COUNTRY OF REF DOCUMENT : CH PAYMENT DATE : 20060815 YEAR OF FEE PAYMENT : 7
EP1138294 B1	20071030	LSAS	REG	REFERENCE TO A NATIONAL CODE	PARTYTYPE : OWNER REF COUNTRY CODE : CH OWNER : MCNEIL-PPC, INC. REF LEGAL EVENT CODE : PFA OLDPARTY : MCNEIL-PPC, INC.#GRANDVIEW ROAD#SKILLMAN NJ 08558 (US) -TRANSFER TO- MCNEIL-PPC, INC.#GRANDVIEW ROAD#SKILLMAN NJ 08558 (US)
EP1138294 B1	20080229	LSLE	REG	REFERENCE TO A NATIONAL CODE	REF COUNTRY CODE : PT REF LEGAL EVENT CODE : MM4A TEXT : LAPSE DUE TO NON-PAYMENT OF FEES EFFECTIVE DATE : 20080215
EP1138294 B1	20080415	LSLE	REG	REFERENCE TO A	REF COUNTRY CODE : CH

				NATIONAL CODE	REF LEGAL EVENT CODE : PL
EP1138294 B1	20080430	LSLE	-PG25	LAPSED IN A CONTRACTING STATE ANNOUNCED VIA POSTGRANT INFORM. FROM NAT. OFFICE TO EPO	COUNTRY OF REF DOCUMENT : CH NOTIFICATIONOFLAPSE : LAPSE BECAUSE OF NON-PAYMENT OF DUE FEES LAPSED DATE : 20070831
EP1138294 B1	20080430	LSLE	-PG25	LAPSED IN A CONTRACTING STATE ANNOUNCED VIA POSTGRANT INFORM. FROM NAT. OFFICE TO EPO	COUNTRY OF REF DOCUMENT : LI NOTIFICATIONOFLAPSE : LAPSE BECAUSE OF NON-PAYMENT OF DUE FEES LAPSED DATE : 20070831
EP1138294 B1	20080430	LSLE	-PG25	LAPSED IN A CONTRACTING STATE ANNOUNCED VIA POSTGRANT INFORM. FROM NAT. OFFICE TO EPO	COUNTRY OF REF DOCUMENT : NL NOTIFICATIONOFLAPSE : LAPSE BECAUSE OF NON-PAYMENT OF DUE FEES LAPSED DATE : 20080301
EP1138294 B1	20080501	LSLE	-NLV4	NL: LAPSED OR ANULLED DUE TO NON-PAYMENT OF THE ANNUAL FEE	REF COUNTRY CODE : EP EFFECTIVE DATE : 20080301
EP1138294 B1	20080530	LSLE	-PG25	LAPSED IN A CONTRACTING STATE ANNOUNCED VIA POSTGRANT INFORM. FROM NAT. OFFICE TO EPO	COUNTRY OF REF DOCUMENT : PT NOTIFICATIONOFLAPSE : LAPSE BECAUSE OF NON-PAYMENT OF DUE FEES LAPSED DATE : 20080215
EP1138294 B1	20200815	PEXP		Calculated Patent Term Expiry	
EP1138294 B2	20080611	LSGT	+	granted / extensions (spc, cpc, pte)	
EP1138294 B2	20080611	LSRE	27A	MAINTAINED AS AMENDED	EFFECTIVE DATE : 20080611
EP1138294 B2	20081201	LSRE	REG	REFERENCE TO A NATIONAL CODE	REF COUNTRY CODE : ES REF LEGAL EVENT CODE : DC2A DATE OF REF DOCUMENT : 20080818 KIND CODE OF REF DOCUMENT : T5 DESIGNATED STATE(S) :
EP1138294 B2	20111130	LSFE	+PGFP	POSTGRANT: ANNUAL FEES PAID TO NATIONAL OFFICE	COUNTRY OF REF DOCUMENT : GB PAYMENT DATE : 20110810 YEAR OF FEE PAYMENT : 12
EP1138294 B2	20111130	LSFE	+PGFP	POSTGRANT: ANNUAL FEES PAID TO NATIONAL OFFICE	COUNTRY OF REF DOCUMENT : DE PAYMENT DATE : 20110810 YEAR OF FEE PAYMENT : 12
EP1138294 B2	20111130	LSFE	+PGFP	POSTGRANT: ANNUAL FEES PAID TO NATIONAL OFFICE	COUNTRY OF REF DOCUMENT : FR PAYMENT DATE : 20110818 YEAR OF FEE PAYMENT : 12
EP1138294 B2	20111130	LSFE	+PGFP	POSTGRANT: ANNUAL FEES PAID TO NATIONAL OFFICE	COUNTRY OF REF DOCUMENT : ES PAYMENT DATE : 20110915 YEAR OF FEE PAYMENT : 12
EP1138294 B2	20111230	LSFE	+PGFP	POSTGRANT: ANNUAL FEES PAID TO NATIONAL OFFICE	COUNTRY OF REF DOCUMENT : IT PAYMENT DATE : 20110812 YEAR OF FEE PAYMENT : 12
EP1138294 B2	20130424	LSLE	-GBPC	GB: EUROPEAN PATENT CEASED THROUGH NON-PAYMENT OF RENEWAL FEE	REF COUNTRY CODE : EP EFFECTIVE DATE : 20120815
EP1138294 B2	20130517	LSLE	REG	REFERENCE TO A NATIONAL CODE	REF COUNTRY CODE : FR REF LEGAL EVENT CODE : ST EFFECTIVE DATE : 20130430
EP1138294 B2	20130531	LSLE	-PG25	LAPSED IN A CONTRACTING STATE ANNOUNCED VIA POSTGRANT INFORM. FROM NAT. OFFICE TO EPO	COUNTRY OF REF DOCUMENT : IT NOTIFICATIONOFLAPSE : LAPSE BECAUSE OF NON-PAYMENT OF DUE FEES LAPSED DATE : 20120815
EP1138294 B2	20130731	LSLE	-PG25	LAPSED IN A CONTRACTING STATE ANNOUNCED VIA POSTGRANT INFORM. FROM NAT. OFFICE TO EPO	COUNTRY OF REF DOCUMENT : DE NOTIFICATIONOFLAPSE : LAPSE BECAUSE OF NON-PAYMENT OF DUE FEES LAPSED DATE : 20130301

EP1138294 B2	20130731	LSLE	-PG25	LAPSED IN A CONTRACTING STATE ANNOUNCED VIA POSTGRANT INFORM. FROM NAT. OFFICE TO EPO	COUNTRY OF REF DOCUMENT : GB NOTIFICATIONOFLAPSE : LAPSE BECAUSE OF NON-PAYMENT OF DUE FEES LAPSED DATE : 20120815
EP1138294 B2	20130830	LSLE	-PG25	LAPSED IN A CONTRACTING STATE ANNOUNCED VIA POSTGRANT INFORM. FROM NAT. OFFICE TO EPO	COUNTRY OF REF DOCUMENT : FR NOTIFICATIONOFLAPSE : LAPSE BECAUSE OF NON-PAYMENT OF DUE FEES LAPSED DATE : 20120831
EP1138294 B2	20130926	LSDW	REG	REFERENCE TO A NATIONAL CODE	REF COUNTRY CODE : DE REF LEGAL EVENT CODE : R119 REF DOCUMENT NUMBER : 60015068 COUNTRY OF REF DOCUMENT : DE EFFECTIVE DATE : 20130301
EP1138294 B2	20131030	LSLE	REG	REFERENCE TO A NATIONAL CODE	REF COUNTRY CODE : ES REF LEGAL EVENT CODE : FD2A EFFECTIVE DATE : 20131030
EP1138294 B2	20131031	LSLE	-PG25	LAPSED IN A CONTRACTING STATE ANNOUNCED VIA POSTGRANT INFORM. FROM NAT. OFFICE TO EPO	COUNTRY OF REF DOCUMENT : ES NOTIFICATIONOFLAPSE : LAPSE BECAUSE OF NON-PAYMENT OF DUE FEES LAPSED DATE : 20120816
EP1138294 B2	20200815	PEXP		Calculated Patent Term Expiry	
ES2230013 T3	20050501	LSGT	+	granted / extensions (spc, cpc, pte)	
ES2230013 T3	20200815	PEXP		Calculated Patent Term Expiry	
HK1040902 A1	20050708	LSGT	+	granted / extensions (spc, cpc, pte)	
HK1040902 A1	20090327	LSLE	-PC	PATENT CEASED (I.E. PATENT HAS LAPSED DUE TO THE FAILURE TO PAY THE RENEWAL FEE)	EFFECTIVE DATE : 20080815
HK1040902 A1	20220403	PEXP		Calculated Patent Term Expiry	
IN00459CA2000 A	20060217	LSPB	+	published / reissued	
IN206858 B	20070518	LSGT	+	granted / extensions (spc, cpc, pte)	
IN206858 B	20200814	PEXP		Calculated Patent Term Expiry	
KR20010093621 A	20011029	LSPB	+	published / reissued	
KR20010093621 A	20050816	LSES	A201	REQUEST FOR EXAMINATION	
KR20010093621 A	20060831	LSES	-E902	NOTIFICATION OF REASON FOR REFUSAL	
KR20010093621 A	20070223	LSRV	-E601	DECISION TO REFUSE APPLICATION	
MXPA00008217 A1	20020424	LSPB	+	published / reissued	
NZ506339 A	20020531	LSPB	+	published / reissued	
NZ506339 A	20020927	LSGT	+PSEA	PATENT SEALED	
NZ506339 A	20040827	LSFE	+RENW	RENEWAL (RENEWAL FEES ACCEPTED)	
PT1138294 T	20050131	LSGT	+	granted / extensions (spc, cpc, pte)	
PT1138294 T	20200815	PEXP		Calculated Patent Term Expiry	
RU2000121928 A	20020827	LSPB	+	published / reissued	
RU2257187 C2	20050727	LSGT	+	granted / extensions (spc, cpc, pte)	
RU2257187 C2	20100720	LSLE	-MM4A	THE PATENT IS INVALID DUE TO NON-PAYMENT OF FEES	EFFECTIVE DATE : 20070816

RU2257187 C2	20200815	PEXP		Calculated Patent Term Expiry
ZA200004163 A	20020215	LSGT	+	granted / extensions (spc, cpc, pte)
ZA200004163 A	20200814	PEXP		Calculated Patent Term Expiry

6) Family number: 17003195 (DE29915071U1) © PatBase

Title: Lady hygiene insert

Abstract: Source: DE29915071U1 (Claim 1) 1. Damenhygieneeinlage in Streifenform mit einem vorderen Endabschnitt (10), einem bei Benutzung im Genitalbereich zur Koerperanlage kommenden mittleren Kernabschnitt (12) und einem bei Benutzung im unteren Gesaessbereich zur Koerperanlage kommenden hinteren Endabschnitt (14), wobei zumindest der Kernabschnitt vorderseitig aus einem saugfaehigen Material zum Aufnehmen von Koerperfluessigkeit besteht, dadurch gekennzeichnet, dass der hintere Endabschnitt (14) fuer ein Versenken im Gesaessfurchenbereich schmaler als der Kernabschnitt (12) ausgebildet ist.

Machine translation: (Claim 1) 1 Feminine hygiene liner in strip form with a front end portion (10), one in use in the genital area to Koerperanlage coming middle core section (12) and one for use in the lower Gesaessbereich to Koerperanlage coming back end (14), wherein at least the core portion of the front end to of an absorbent material record consists of body fluids, characterized in that the rear end portion (14) for an immersion in trained Gesaessfurchenbereich is narrower than the core portion (12).

Classifications:
International (IPC 8-9)**:** A61F13/15 (Advanced/Invention)
International (IPC 1-7)**:** A61F13/15
CPC: A61F13/47254 A61F2013/4708
European: A61F13/472C1B K61F13/47D

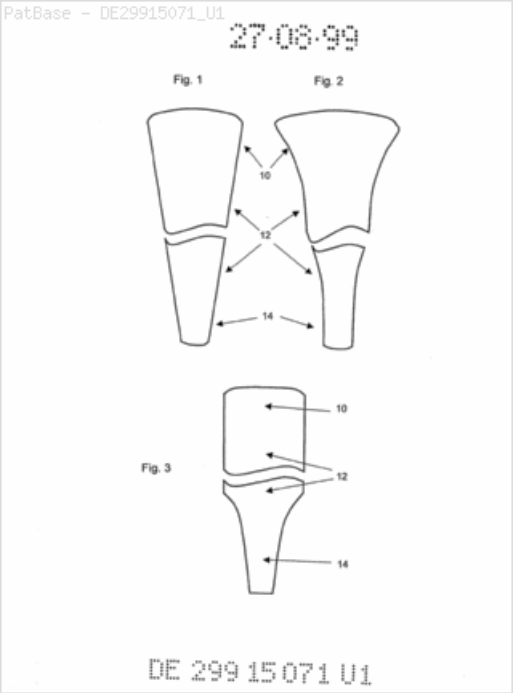

Family:

Publication number	Publication date	Application number	Application date
DE29915071 U1	20000113	DE19992015071U	19990827

Priority:
DE19992015071U 19990827

Probable Assignee: SEIFFERT ANNETT
Assignee(s): (std)**:** SEIFFERT ANNETT

Legal status (INPADOC)

View legal status timeline

Patent	Date recorded	Event group	Code	Event	Details
DE29915071 U1	20000113	LSGT	+	granted / extensions (spc, cpc, pte)	
DE29915071 U1	20000217	LSGT	R207	UTILITY MODEL SPECIFICATION	EFFECTIVE DATE : 20000217
DE29915071 U1	20030612	LSLE	-R156	LAPSE OF IP RIGHT AFTER 3 YEARS	EFFECTIVE DATE : 20030301
DE29915071 U1	20090827	PEXP		Calculated Patent Term Expiry	

7) Family number: 17924908 (US5683373A) © PatBase

Title: Sanitary napkin shaped for use with a thong garment

Abstract: Source: US5683373A A sanitary napkin shaped to fit the contours of a thong garment from the front of the wearer to the crotch of the wearer. The napkin is generally "V" shaped, so that the vertex of the "V" can be positioned below the vagina of the wearer. The napkin is generally V-shaped with a bulb-shaped top end and an elongated lower portion, so that the vertex of the "v" can be positioned below the vagina of the wearer.

Classifications:
International (IPC 8-9): A41B13/02 A61F13/15 A61F13/20 A61F13/72 (Advanced/Invention);
A61F13/15 (Core/Invention)
International (IPC 1-7): A61F13/00 A61F13/15 A61F13/20 A61F13/72
CPC: A61F13/47254
European: A61F13/472C1B
US: 604/385.01 604/385.1 604/387

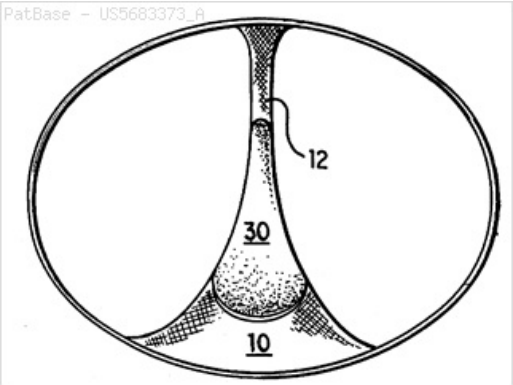

Family:

Publication number	Publication date	Application number	Application date
AR006792 AA	19990929	AR1997P101629	19970422
AU199726806 A1	19971112	AU19970026806	19970421
AU725437 B2	20001012	AU19970026806	19970421
CA2252381 AA	19981020	CA19972252381	19970421
CL1997000712 A1	19980417	CL19970000712	19970421
CL40832 B	20001010	CL19970000712	19970421
EP0920292 A1	19990609	EP19970918792	19970421
TH27819 A	19980130	TH19971001522	19970422
TW423311 Y	20010221	TW19990207583U	19970421
US5683373 A	19971104	US19960636001	19960422
WO9739713 A1	19971030	WO1997US06826	19970421

Priority:
US19960636001 19960422 WO1997US06826 19970421

Probable Assignee: KAMELA J DARBY
Assignee(s): (std): DARBY KAMELA J ; KAMELA J DARBY
Assignee(s): Kamela J. ; Darby
Inventor(s): (std): DARBY KAMELA J ; KAMELA J DARBY
Inventor(s): Darby ; Kamela J.
Agent(s): SPRUSON AND FERGUSON; ASPEN PHARMA PTY LTD; MARKS AND CLERK; VILLASECA
Designated states: AL AM AT AU AZ BA BB BE BF BG BR BY CA CH CN CU CZ DE DK EE ES FI FR GB GE GH GR HU IE IL IS IT JP KE KG KP KR KZ LC LI LK LR LS LT LU LV MC MD MG MK MN MW MX NL NO NZ PL PT RO RU SD SE SG SI SK SZ TJ TM TR TT UA UG US UZ VN YU

Legal status (INPADOC)

View legal status timeline

Patent	Date recorded	Event group	Code	Event	Details
AR006792 AA	19990929	LSPB	+	published / reissued	
AR006792 AA	20050221	LSWD	-FA	ABANDONMENT OR WITHDRAWAL	
AU199726806 A1	19971112	LSPB	+	published / reissued	
AU725437 B2	20001012	LSGT	+	granted / extensions (spc, cpc, pte)	
AU725437 B2	20010208	LSGT	+FGA	LETTERS PATENT SEALED OR GRANTED (STANDARD PATENT)	
AU725437 B2	20021121	LSLE	-MK14	PATENT CEASED SECTION 143(A) (ANNUAL FEES NOT PAID) OR EXPIRED	
AU725437 B2	20170421	PEXP		Calculated Patent Term Expiry	
CA2252381 AA	19981020	LSPB	+	published / reissued	
CA2252381 AA	20020422	LSLE	-FZDE	DEAD	
CL1997000712 A1	19980417	LSPB	+	published / reissued	

CL40832 B	20001010	LSGT	+	granted / extensions (spc, cpc, pte)	
CL40832 B	20151010	PEXP		Calculated Patent Term Expiry	
EP0920292 A1	19990609	LSPB	+	published / reissued	
EP0920292 A1	19990609	LSES	+17P	REQUEST FOR EXAMINATION FILED	EFFECTIVE DATE : 19981116
EP0920292 A1	20021113	LSDW	-18D	APPLICATION DEEMED TO BE WITHDRAWN	EFFECTIVE DATE : 20011101
EP0920292 A1	20061201	LSWD	REG	REFERENCE TO A NATIONAL CODE	REF COUNTRY CODE : HK REF LEGAL EVENT CODE : WD REF DOCUMENT NUMBER : 1021617 COUNTRY OF REF DOCUMENT : HK
TH27819 A	19980130	LSPB	+	published / reissued	
TW423311 Y	20010221	LSGT	+	granted / extensions (spc, cpc, pte)	
US5683373 A	19971104	LSGT	+	granted / extensions (spc, cpc, pte)	
US5683373 A	20010614	LSFE	+FPAY	FEE PAYMENT	YEAR OF FEE PAYMENT : 4
US5683373 A	20051104	LSLE	-LAPS	LAPSE FOR FAILURE TO PAY MAINTENANCE FEES	
US5683373 A	20051207	LSLE	-PEX1	Patent Expired Due to NonPayment of Maintenance Fees Under 37 CFR 1.362	
US5683373 A	20060103	LSLE	-FP	EXPIRED DUE TO FAILURE TO PAY MAINTENANCE FEE	EFFECTIVE DATE : 20051104
US5683373 A	20160422	PEXP		Calculated Patent Term Expiry	
WO9739713 A1	19971030	LSPB	+	published / reissued	
WO9739713 A1	19981020	LSNP	ENP	ENTRY INTO THE NATIONAL PHASE IN:	REF DOCUMENT NUMBER : 2252381 COUNTRY OF REF DOCUMENT : CA
WO9739713 A1	19981020	LSNP	ENP	ENTRY INTO THE NATIONAL PHASE IN:	REF DOCUMENT NUMBER : 2252381 COUNTRY OF REF DOCUMENT : CA KIND CODE OF REF DOCUMENT : A DESIGNATED STATE(S) :
WO9739713 A1	19981021	LSNP	+WWE	WIPO INFORMATION: ENTRY INTO NATIONAL PHASE	REF DOCUMENT NUMBER : PA/A/1998/008748 COUNTRY OF REF DOCUMENT : MX
WO9739713 A1	19981105	LSNP	+WWE	WIPO INFORMATION: ENTRY INTO NATIONAL PHASE	REF DOCUMENT NUMBER : 1997918792 COUNTRY OF REF DOCUMENT : EP
WO9739713 A1	19990304	LSWD	REG	REFERENCE TO NATIONAL CODE	REF COUNTRY CODE : DE REF LEGAL EVENT CODE : 8642
WO9739713 A1	19990305	LSNE	NENP	NON-ENTRY INTO THE NATIONAL PHASE IN:	REF DOCUMENT NUMBER : 97538314 COUNTRY OF REF DOCUMENT : JP
WO9739713 A1	19990609	LSPB	+WWP	WIPO INFORMATION: PUBLISHED IN NATIONAL OFFICE	REF DOCUMENT NUMBER : 1997918792 COUNTRY OF REF DOCUMENT : EP
WO9739713 A1	20011101	LSWD	-WWW	WIPO INFORMATION: WITHDRAWN IN NATIONAL OFFICE	REF DOCUMENT NUMBER : 1997918792 COUNTRY OF REF

8) Family number: 1966300 (US4627848A) © PatBase

Title: Anatomical pad

Abstract: Source: US4627848A An anatomical liner is provided which is ellipsoidal in both horizontal and vertical cross-section and is designed to be positioned and maintained within the vulva without penetrating the vaginal canal.

Classifications:
International (IPC 8-9): A61F13/15 A61F13/472 (Advanced/Invention); A61F13/15 (Core/Invention)
International (IPC 1-7): A61F13/16 A61F13/18 A61F13/20 B32B33/00
CPC: A61F13/47227 A61F13/47245 A61F13/534 A61F13/53418 A61F13/53427 A61F13/537 A61F2013/4581 A61F2013/4708 A61F2013/530131 A61F2013/530481 A61F2013/53445 A61F2013/53721
European: A61F13/472B1 A61F13/472C1 A61F13/534B2 A61F13/534B4 K61F13/15E2 K61F13/15E2A K61F13/15E2D K61F13/15E2D4 K61F13/15E4 K61F13/15E7 K61F13/45C4B K61F13/47D
US: 604/370 604/378 604/385.01 D24/125

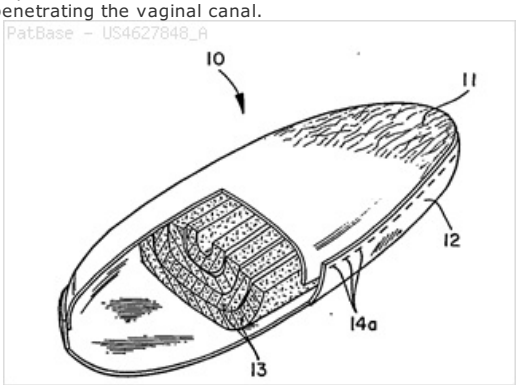

Family:

Publication number	Publication date	Application number	Application date
AU198541468 A1	19851031	AU19850041468	19850422
BRPI8501899 A	19851224	BR1985PI01899	19850419
EP0159671 A2	19851030	EP19850104720	19850418
EP0159671 A3	19860730	EP19850104720	19850418
GB2157571 A1	19851030	GB19850010268	19850423
GB8510268 A0	19850530	GB19850010268	19850423
JP60234660 A2	19851121	JP19850087365	19850423
KR19850007553 A	19851207	KR19850002728	19850423
US4627848 A	19861209	US19840603064	19840423

Priority:
US19840603064 19840423

Probable Assignee: KIMBERLY CLARK WORLDWIDE INC

Assignee(s): (std): KIMBERLY CLARK CO

Assignee(s): KIMBERLY CLARK CORP ; KIMBERLY CLARK NEENAH WI A DE CORP CORP ; KIMBERLY CLARK WORLDWIDE INC ; KIMBERLEY CLARK CORP

Inventor(s): (std): FUREDERITSUHI OOMA RATSUSEN ; LASSEN FREDERICH O ; LASSEN FREDERICH OMA ; LASSEN FREDERICK OMA ; MASTEN DIANNE S ; MASTEN DIANNE SUE ; PEERENBOOM ROBERT J ; PEERENBOOM ROBERT JOHN ; ROBAATO JIYON PIIRENBUUMU ; CHIERII RII SHIYURUTSU ; DAIAN SUU MASUTEN ; SCHULTZ CHERI L ; SCHULTZ CHERI LEE

Inventor(s): CHERI LEE SCHULTZ ; DIANNE SUE MASTEN ; FREDERICH OMA LASSEN ; FREDERICK OMA LASSEN ; ROBERT JOHN PEERENBOOM

Agent(s): SPRUSON AND FERGUSON; ASPEN PHARMA PTY LTD

Designated states: BE DE FR IT LU NL SE

Legal status (INPADOC)

View legal status timeline

Patent	Date recorded	Event group	Code	Event	Details
AU198541468 A1	19851031	LSPB	+	published / reissued	
BRPI8501899 A	19851224	LSPB	+	published / reissued	
EP0159671 A2	19851030	LSPB	+	published / reissued	
EP0159671 A3	19870923	LSDW	-18D	APPLICATION DEEMED TO BE WITHDRAWN	EFFECTIVE DATE : 19870131
GB2157571 A1	19851030	LSPB	+	published / reissued	
GB2157571 A1	19860806	LSWD	-WAP	APPLICATION WITHDRAWN, TAKEN TO BE WITHDRAWN OR REFUSED ** AFTER PUBLICATION UNDER SECTION 16(1)	
JP60234660 A2	19851121	LSPB	+	published / reissued	
KR19850007553 A	19851207	LSPB	+	published / reissued	
US4627848 A	19861209	LSGT	+	granted / extensions (spc, cpc, pte)	
US4627848 A	19840423	LSAS	AS	ASSIGNMENT	PARTYTYPE : OWNER

					OWNER : KIMBERLY CLARK CORPORATION NEENAH WI A DE CORP OLDPARTY : ASSIGNMENT OF ASSIGNORS INTEREST.; ASSIGNORS:LASSEN, FREDERICH O.; MASTEN, DIANNE S.; SCHULTZ, CHERI L.; AND OTHERS; REEL/FRAME:004253/0775 EFFECTIVE DATE : 19840417
US4627848 A	19861008	LSGT	PAT1	Patented Case	
US4627848 A	19900116	LSFE	+FPAY	FEE PAYMENT	YEAR OF FEE PAYMENT : 4
US4627848 A	19940331	LSFE	+FPAY	FEE PAYMENT	YEAR OF FEE PAYMENT : 8
US4627848 A	19970421	LSAS	AS	ASSIGNMENT	PARTYTYPE : OWNER OWNER : KIMBERLY-CLARK WORLDWIDE, INC., WISCONSIN OLDPARTY : ASSIGNMENT OF ASSIGNORS INTEREST; ASSIGNOR:KIMBERLY-CLARK CORPORATION; REEL/FRAME:008519/0919 EFFECTIVE DATE : 19961130
US4627848 A	19980126	LSFE	+FPAY	FEE PAYMENT	YEAR OF FEE PAYMENT : 12

9) Family number: 20657024 (US6350257B) © PatBase

Title: Absorbent article with high stiffness

Abstract: Source: US6350257B The invention relates to an absorbent article such as a sanitary napkin, an incontinence guard, or a panty-liner, which article has a generally elongated shape with a longitudinal direction and a transverse direction and exhibits two side edges (9, 10), two end portions (6, 7), and a crotch portion (8) located between the end portions (6, 7), which article further exhibits a liquid-pervious cover layer (2), intended to be facing the user during use, and a liquid-impervious cover layer (3), intended to be facing away from the user during use. The article comprises at least within the crotch portion (8) a stiffening element (15) of a material with a very high intrinsic stiffness, whereby the article in the crotch portion (8) has an extension in the transverse direction which during use of the article is between 40 mm and 15 mm and preferably is between 20 mm and 35 mm.

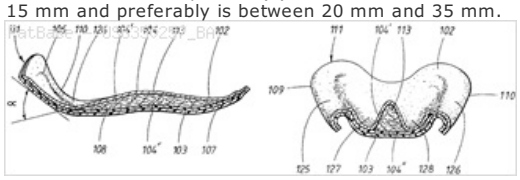

Classifications:
International (IPC 8-9): A61F13/00 A61F13/15
A61F13/472 (Advanced/Invention);
A61F13/00 A61F13/15 (Advanced/Non-invention);
A61F13/00 A61F13/15 (Core/Invention)
International (IPC 1-7): A61F13/15 A61F13/472
CPC: A61F13/4702 A61F13/47209 A61F2013/455 A61F2013/49493
European: A61F13/47A K61F13/45C3A K61F13/472A K61F13/494F
US: 604/385.01 604/385.17

Family:

Publication number	Publication date	Application number	Application date
AT213614 E	20020315	AT19970913601T	19971111
AU199850744 A1	19980610	AU19980050744	19971111
AU723921 B2	20000907	AU19980050744	19971111
CA2271053 AA	19990503	CA19972271053	19971111
CO4900013 A1	20000327	CO19970067094	19971114
DE69710767 D1	20020404	DE19976010767	19971111
DE69710767 T2	20021024	DE19976010767T	19971111
DK0944372 T3	20020610	DK19970913601T	19971111
EP0944372 A1	19990929	EP19970913601	19971111
EP0944372 B1	20020227	EP19970913601	19971111
ES2174238 T3	20021101	ES19970913601T	19971111
GB2319185 A1	19980520	GB19970024015	19971113
GB2319185 B2	20000524	GB19970024015	19971113
GB9724015 A0	19980114	GB19970024015	19971113
JP2001504724 T2	20010410	JP19980523549T	19971111
KR20000068993 A	20001125	KR19997004318	19971111
NZ335372 A	20001124	NZ19970335372	19971111
PE13699 A1	19990304	PE19970001033	19971114
PL333350 A1	19991206	PL19970333350	19971111
RU2203641 C2	20030510	RU19990112568	19971111
RU99112568 A	20010420	RU19990112568	19971111
SE513198 C2	20000731	SE19960004223	19961115
SE9604223 A	19980516	SE19960004223D	19961115
SE9604223 A0	19961115	SE19960004223	19961115
SE9604223 L	19980516	SE19960004223	19961115
SK61999 A3	20000516	SK19990000619	19971111
TH32547 A	19990310	TH19971004651	19971113
TNSN97177 A1	20000901	TN1997SN00177	19971113
TNSN97177 A1	19991231	TN1997SN00177	19971113
TW515279 Y	20021221	TW19990220393U	19971114
US6350257 BA	20020226	US19990297365	19990802
WO9822057 A1	19980528	WO1997SE01881	19971111
ZA9709875 A	19980528	ZA19970009875	19971103

Priority:

SE19960004223 19961115 WO1997SE01881 19971111

Probable Assignee: SCA HYGIENE PRODUCTS AB

Assignee(s): (std): BJOERKLUND CAMILLA ; DREVIK SOLGUN ; GUSTAFSSON ANDERS ; SCA HYGIENE PROD AB ; MOELNLYCKE AB ; SAMUELSSON ANN ; SCA HYGIENE PRODUCTS AB ; WIDLUND URBAN ; SCA MOLNLYCKE AB ; SCA M LNLYCKE AB ; SCA MOELNLYCKE A B ; SCA MOELNLYCKE AB

Assignee(s): SCA Molnylcke AB. ; SKA KHAJDZHIN PRODAKTS AB ; SCA M 247 LNLYCKE AB ; SCA HYGIENE PRODUCTS AB GOETEBORG ; SCA HYGIENE PRODUCTS AB GOETEBORG GOTENBURG ; SCA HYGIENE PRODUCTS ABS ; SCA M ; LNLYCKE AB ; BJORKLUND CAMILLA

Inventor(s): (std): ANDERS GUSTAFSSON ; ANN SAMUELSSON ; B ERKLUND KAMILLA ; BJOERKLUND CAMILLA ; CAMILLA BJOERKLUND ; CAMILLA BJORKLUND ; DREVIK SOL GUN ; DREVIK SOLGUN ; GUSTAFSSON ANDERS ; SAMUEHL SSON ANN ; SAMUELSSON ANN ; SOLGUN DREVIK ; URBAN WIDLUND ; VIDLUND URBAN ; WIDLUND URBAN ; BJORKLUND CAMILLA

Inventor(s): SAMUEHL'SSON ANN ; DREVIK SOL'GUN ; B'ERKLUND KAMILLA

Agent(s): WATERMARK PATENT AND TRADE MARKS ATTORNEYS; WATERMARK INTELLECTUAL PROPERTY PTY LTD; FETHERSTONHAUGH AND CO; ERNESTO CAVELIER

Designated states: AL AM AT AU AZ BA BB BE BF BG BJ BR BY CA CF CG CH CI CM CN CU CZ DE DK EE ES FI FR GA GB GE GH GR HU ID IE IL IS IT JP KE KG KP KR KZ LC LI LK LR LS LT LU LV MC MD MG MK MN MR MW MX NE NL NO NZ PL PT RO RU SD SE SG SI SK SL SN SZ TG TJ TM TR TT UA UG US UZ VN YU ZW

Legal status (INPADOC)

View legal status timeline

Patent	Date recorded	Event group	Code	Event	Details
AT213614 E	20020315	LSGT	+	granted / extensions (spc, cpc, pte)	
AT213614 E	20020815	LSLE	-RER	CEASED AS TO PARAGRAPH 5 LIT. 3 LAW INTRODUCING PATENT TREATIES	
AT213614 E	20171111	PEXP		Calculated Patent Term Expiry	
AU199850744 A1	19980610	LSPB	+	published / reissued	
AU723921 B2	20000907	LSGT	+	granted / extensions (spc, cpc, pte)	
AU723921 B2	20010111	LSGT	+FGA	LETTERS PATENT SEALED OR GRANTED (STANDARD PATENT)	
AU723921 B2	20171111	PEXP		Calculated Patent Term Expiry	
CA2271053 AA	19990503	LSPB	+	published / reissued	
CA2271053 AA	20031112	LSLE	-FZDE	DEAD	
CO4900013 A1	20000327	LSPB	+	published / reissued	
DE69710767 D1	20030227	LSOP	-8363	OPPOSITION AGAINST THE PATENT	
DE69710767 D1	20041028	LSRV	-8331	COMPLETE REVOCATION	
DE69710767 T2	20021024	LSGT	+	granted / extensions (spc, cpc, pte)	
DE69710767 T2	20171111	PEXP		Calculated Patent Term Expiry	
DK0944372 T3	20020610	LSGT	+	granted / extensions (spc, cpc, pte)	
DK0944372 T3	20171111	PEXP		Calculated Patent Term Expiry	
EP0944372 A1	19990929	LSPB	+	published / reissued	
EP0944372 A1	19990929	LSES	+17P	REQUEST FOR EXAMINATION FILED	EFFECTIVE DATE : 19990420
EP0944372 A1	20000315	LSES	+17Q	FIRST EXAMINATION REPORT	EFFECTIVE DATE : 20000131
EP0944372 B1	20020227	LSGT	+	granted / extensions (spc, cpc, pte)	
EP0944372 B1	20020227	LSLE	-PG25	LAPSED IN A CONTRACTING STATE ANNOUNCED VIA POSTGRANT INFORM. FROM NAT. OFFICE TO EPO	COUNTRY OF REF DOCUMENT : AT NOTIFICATIONOFLAPSE : LAPSE BECAUSE OF FAILURE TO SUBMIT A TRANSLATION OF THE DESCRIPTION OR TO PAY THE FEE WITHIN THE PRESCRIBED TIME-LIMIT LAPSED DATE : 20020227
EP0944372 B1	20020227	LSLE	-PG25	LAPSED IN A CONTRACTING STATE ANNOUNCED VIA POSTGRANT INFORM. FROM NAT. OFFICE TO EPO	COUNTRY OF REF DOCUMENT : GR NOTIFICATIONOFLAPSE : LAPSE BECAUSE OF FAILURE TO SUBMIT A TRANSLATION OF THE DESCRIPTION OR TO PAY THE FEE WITHIN THE PRESCRIBED TIME-LIMIT LAPSED DATE : 20020227
EP0944372 B1	20020228	LSNP	REG	REFERENCE TO A NATIONAL CODE	REF COUNTRY CODE : CH REF LEGAL EVENT CODE : EP
EP0944372 B1	20020527	LSLE	-PG25	LAPSED IN A CONTRACTING STATE ANNOUNCED VIA POSTGRANT INFORM. FROM NAT. OFFICE TO EPO	COUNTRY OF REF DOCUMENT : PT NOTIFICATIONOFLAPSE : LAPSE BECAUSE OF FAILURE TO SUBMIT A TRANSLATION OF THE DESCRIPTION OR TO PAY THE FEE WITHIN THE PRESCRIBED TIME-LIMIT LAPSED DATE : 20020527
EP0944372 B1	20020527	LSLE	-PG25	LAPSED IN A CONTRACTING STATE	COUNTRY OF REF DOCUMENT : SE NOTIFICATIONOFLAPSE : LAPSE

				ANNOUNCED VIA POSTGRANT INFORM. FROM NAT. OFFICE TO EPO	BECAUSE OF FAILURE TO SUBMIT A TRANSLATION OF THE DESCRIPTION OR TO PAY THE FEE WITHIN THE PRESCRIBED TIME-LIMIT LAPSED DATE : 20020527
EP0944372 B1	20021101	LSGT	REG	REFERENCE TO A NATIONAL CODE	REF COUNTRY CODE : ES REF LEGAL EVENT CODE : FG2A REF DOCUMENT NUMBER : 2174238 COUNTRY OF REF DOCUMENT : ES KIND CODE OF REF DOCUMENT : T3 DESIGNATED STATE(S) :
EP0944372 B1	20021111	LSLE	-PG25	LAPSED IN A CONTRACTING STATE ANNOUNCED VIA POSTGRANT INFORM. FROM NAT. OFFICE TO EPO	COUNTRY OF REF DOCUMENT : FI NOTIFICATIONOFLAPSE : LAPSE BECAUSE OF NON-PAYMENT OF DUE FEES LAPSED DATE : 20021111
EP0944372 B1	20021111	LSLE	-PG25	LAPSED IN A CONTRACTING STATE ANNOUNCED VIA POSTGRANT INFORM. FROM NAT. OFFICE TO EPO	COUNTRY OF REF DOCUMENT : IE NOTIFICATIONOFLAPSE : LAPSE BECAUSE OF NON-PAYMENT OF DUE FEES LAPSED DATE : 20021111
EP0944372 B1	20030122	LSOP	-26	OPPOSITION FILED	PARTYTYPE : OPPONENT OPPONENT : KIMBERLY-CLARK WORLDWIDE, INC. EFFECTIVE DATE : 20021127
EP0944372 B1	20030401	LSOP	-NLR1	NL: OPPOSITION HAS BEEN FILED WITH THE EPO	PARTYTYPE : OPPONENT REF COUNTRY CODE : EP OPPONENT : KIMBERLY-CLARK WORLDWIDE, INC.
EP0944372 B1	20030903	LSLE	REG	REFERENCE TO A NATIONAL CODE	REF COUNTRY CODE : IE REF LEGAL EVENT CODE : MM4A
EP0944372 B1	20031027	LSFE	+PGFP	POSTGRANT: ANNUAL FEES PAID TO NATIONAL OFFICE	COUNTRY OF REF DOCUMENT : GB PAYMENT DATE : 20031027 YEAR OF FEE PAYMENT : 7
EP0944372 B1	20031030	LSFE	+PGFP	POSTGRANT: ANNUAL FEES PAID TO NATIONAL OFFICE	COUNTRY OF REF DOCUMENT : FR PAYMENT DATE : 20031030 YEAR OF FEE PAYMENT : 7
EP0944372 B1	20031111	LSFE	+PGFP	POSTGRANT: ANNUAL FEES PAID TO NATIONAL OFFICE	COUNTRY OF REF DOCUMENT : NL PAYMENT DATE : 20031111 YEAR OF FEE PAYMENT : 7
EP0944372 B1	20031118	LSFE	+PGFP	POSTGRANT: ANNUAL FEES PAID TO NATIONAL OFFICE	COUNTRY OF REF DOCUMENT : CH PAYMENT DATE : 20031118 YEAR OF FEE PAYMENT : 7
EP0944372 B1	20031120	LSFE	+PGFP	POSTGRANT: ANNUAL FEES PAID TO NATIONAL OFFICE	COUNTRY OF REF DOCUMENT : ES PAYMENT DATE : 20031120 YEAR OF FEE PAYMENT : 7
EP0944372 B1	20031124	LSFE	+PGFP	POSTGRANT: ANNUAL FEES PAID TO NATIONAL OFFICE	COUNTRY OF REF DOCUMENT : BE PAYMENT DATE : 20031124 YEAR OF FEE PAYMENT : 7
EP0944372 B1	20031126	LSFE	+PGFP	POSTGRANT: ANNUAL FEES PAID TO NATIONAL OFFICE	COUNTRY OF REF DOCUMENT : DE PAYMENT DATE : 20031126 YEAR OF FEE PAYMENT : 7
EP0944372 B1	20031127	LSFE	+PGFP	POSTGRANT: ANNUAL FEES PAID TO NATIONAL OFFICE	COUNTRY OF REF DOCUMENT : DK PAYMENT DATE : 20031127 YEAR OF FEE PAYMENT : 7
EP0944372 B1	20040915	LSLE	REG	REFERENCE TO A NATIONAL CODE	REF COUNTRY CODE : CH REF LEGAL EVENT CODE : PL
EP0944372 B1	20040922	LSRV	-27W	PATENT REVOKED	EFFECTIVE DATE : 20040317
EP0944372 B1	20040922	LSRV	-GBPR	GB: PATENT REVOKED UNDER ART. 102 OF THE EP CONVENTION DESIGNATING THE UK AS CONTRACTING STATE	REF COUNTRY CODE : EP TEXT : 20040317
EP0944372 B1	20041201	LSOP	NLR2	NL: DECISION OF	REF COUNTRY CODE : EP

				OPPOSITION	EFFECTIVE DATE : 20040317
EP0944372 B1	20171111	PEXP		Calculated Patent Term Expiry	
ES2174238 T3	20021101	LSGT	+	granted / extensions (spc, cpc, pte)	
ES2174238 T3	20021101	LSGT	+FG2A	DEFINITIVE PROTECTION	REF DOCUMENT NUMBER : 944372 COUNTRY OF REF DOCUMENT : ES
ES2174238 T3	20171111	PEXP		Calculated Patent Term Expiry	
GB2319185 A1	19980520	LSPB	+	published / reissued	
GB2319185 B2	20000524	LSGT	+	granted / extensions (spc, cpc, pte)	
GB2319185 B2	20040630	LSLE	-PCNP	PATENT CEASED THROUGH NON-PAYMENT OF RENEWAL FEE	EFFECTIVE DATE : 20031113
GB2319185 B2	20171113	PEXP		Calculated Patent Term Expiry	
JP2001504724 T2	20010410	LSPB	+	published / reissued	
KR20000068993 A	20001125	LSPB	+	published / reissued	
KR20000068993 A	20021112	LSDW	-WITN	WITHDRAWAL DUE TO NO REQUEST FOR EXAMINATION	
NZ335372 A	20001124	LSPB	+	published / reissued	
NZ335372 A	20011130	LSFE	+RENW	RENEWAL (RENEWAL FEES ACCEPTED)	
NZ335372 A	20020301	LSFE	+RENW	RENEWAL (RENEWAL FEES ACCEPTED)	
PE13699 A1	19990304	LSPB	+	published / reissued	
PE13699 A1	20010531	LSGT	+FG	GRANT, REGISTRATION	
PE13699 A1	20030612	LSWD	-FD	APPLICATION DECLARED VOID OR LAPSED	
PL333350 A1	19991206	LSPB	+	published / reissued	
RU2203641 C2	20030510	LSGT	+	granted / extensions (spc, cpc, pte)	
RU2203641 C2	20171111	PEXP		Calculated Patent Term Expiry	
RU99112568 A	20010420	LSPB	+	published / reissued	
SE513198 C2	20000731	LSGT	+	granted / extensions (spc, cpc, pte)	
SE513198 C2	20040629	LSLE	-NUG	PATENT HAS LAPSED	
SE513198 C2	20161115	PEXP		Calculated Patent Term Expiry	
SE9604223 A	19980516	LSPB	+	published / reissued	
SK61999 A3	20000516	LSPB	+	published / reissued	
TH32547 A	19990310	LSPB	+	published / reissued	
TNSN97177 A1	19991231	LSPB	+	published / reissued	
TNSN97177 A1	20000901	LSPB	+	published / reissued	
TW515279 Y	20021221	LSGT	+	granted / extensions (spc, cpc, pte)	
US6350257 BA	20020226	LSGT	+	granted / extensions (spc, cpc, pte)	
US6350257 BA	19990802	LSAS	AS	ASSIGNMENT	PARTYTYPE : OWNER OWNER : SCA HYGIENE PRODUCTS AB, SWEDEN OLDPARTY : ASSIGNMENT OF ASSIGNORS INTEREST; ASSIGNORS:BJORKLUND, CAMILLA; SAMUELSSON, ANN; WIDLUND, URBAN; AND OTHERS; REEL/FRAME:010135/0131 EFFECTIVE DATE : 19990701
US6350257 BA	20020212	LSGT	PAT1	Patented Case	

US6350257 BA	20050718	LSFE	+FPAY	FEE PAYMENT	YEAR OF FEE PAYMENT : 4
US6350257 BA	20090803	LSFE	+FPAY	FEE PAYMENT	YEAR OF FEE PAYMENT : 8
US6350257 BA	20130731	LSFE	+FPAY	FEE PAYMENT	YEAR OF FEE PAYMENT : 12
US6350257 BA	20190802	PEXP		Calculated Patent Term Expiry	
WO9822057 A1	19980528	LSPB	+	published / reissued	
WO9822057 A1	19990420	LSNP	+WWE	WIPO INFORMATION: ENTRY INTO NATIONAL PHASE	REF DOCUMENT NUMBER : 1997913601 COUNTRY OF REF DOCUMENT : EP
WO9822057 A1	19990423	LSNP	+WWE	WIPO INFORMATION: ENTRY INTO NATIONAL PHASE	REF DOCUMENT NUMBER : 335372 COUNTRY OF REF DOCUMENT : NZ
WO9822057 A1	19990503	LSNP	ENP	ENTRY INTO THE NATIONAL PHASE IN:	REF DOCUMENT NUMBER : 2271053 COUNTRY OF REF DOCUMENT : CA
WO9822057 A1	19990507	LSNP	+WWE	WIPO INFORMATION: ENTRY INTO NATIONAL PHASE	REF DOCUMENT NUMBER : 61999 COUNTRY OF REF DOCUMENT : SK
WO9822057 A1	19990512	LSNP	+WWE	WIPO INFORMATION: ENTRY INTO NATIONAL PHASE	REF DOCUMENT NUMBER : PA/A/1999/004369 COUNTRY OF REF DOCUMENT : MX
WO9822057 A1	19990513	LSNP	ENP	ENTRY INTO THE NATIONAL PHASE IN:	REF DOCUMENT NUMBER : 1998 523549 COUNTRY OF REF DOCUMENT : JP KIND CODE OF REF DOCUMENT : A DESIGNATED STATE(S) :
WO9822057 A1	19990514	LSNP	+WWE	WIPO INFORMATION: ENTRY INTO NATIONAL PHASE	REF DOCUMENT NUMBER : 50744/98 COUNTRY OF REF DOCUMENT : AU
WO9822057 A1	19990514	LSNP	+WWE	WIPO INFORMATION: ENTRY INTO NATIONAL PHASE	REF DOCUMENT NUMBER : 1019997004318 COUNTRY OF REF DOCUMENT : KR
WO9822057 A1	19990802	LSNP	+WWE	WIPO INFORMATION: ENTRY INTO NATIONAL PHASE	REF DOCUMENT NUMBER : 09297365 COUNTRY OF REF DOCUMENT : US
WO9822057 A1	19990916	LSWD	REG	REFERENCE TO NATIONAL CODE	REF COUNTRY CODE : DE REF LEGAL EVENT CODE : 8642
WO9822057 A1	19990929	LSPB	+WWP	WIPO INFORMATION: PUBLISHED IN NATIONAL OFFICE	REF DOCUMENT NUMBER : 1997913601 COUNTRY OF REF DOCUMENT : EP
WO9822057 A1	20001125	LSPB	+WWP	WIPO INFORMATION: PUBLISHED IN NATIONAL OFFICE	REF DOCUMENT NUMBER : 1019997004318 COUNTRY OF REF DOCUMENT : KR
WO9822057 A1	20001221	LSGT	+WWG	WIPO INFORMATION: GRANT IN NATIONAL OFFICE	REF DOCUMENT NUMBER : 50744/98 COUNTRY OF REF DOCUMENT : AU
WO9822057 A1	20020227	LSGT	+WWG	WIPO INFORMATION: GRANT IN NATIONAL OFFICE	REF DOCUMENT NUMBER : 1997913601 COUNTRY OF REF DOCUMENT : EP
WO9822057 A1	20021112	LSWD	-WWW	WIPO INFORMATION: WITHDRAWN IN NATIONAL OFFICE	REF DOCUMENT NUMBER : 1019997004318 COUNTRY OF REF DOCUMENT : KR
WO9822057 A1	20040803	LSWD	-WWW	WIPO INFORMATION: WITHDRAWN IN NATIONAL OFFICE	REF DOCUMENT NUMBER : 1997913601 COUNTRY OF REF DOCUMENT : EP
ZA9709875 A	19980528	LSGT	+	granted / extensions (spc, cpc, pte)	
ZA9709875 A	20171102	PEXP		Calculated Patent Term Expiry	

10) Family number: 20697680 (US6398770B) © PatBase

Title: Absorbent article such as a sanitary towel, an incontinence protector, a pantyliner or the like

Abstract: Source: US6398770B Absorbent article, such as a sanitary towel, an incontinence protector or a pantyliner, which article has essentially an elongate shape, with a longitudinal direction (34) and a transverse direction (35), and has two end portions (10, 11) and a central portion (12) situated between the end portions (10, 11), and on which article there is arranged elastic (18) which gives the article a cup-shaped part (14) at the one end portion (10) and a ridge-like elevation (15) at the other end portion (11).

Classifications:
International (IPC 8-9): A61F13/15 A61F13/49 A61F13/53 A61F5/44 (Advanced/Invention);
A61F5/44 (Advanced/Non-invention);
A61F13/15 A61F5/44 (Core/Invention)
International (IPC 1-7): A61F13/15 A61F13/49 A61F13/53 A61F5/44
CPC: A61F13/47218 A61F13/47245 A61F13/47263 A61F13/47272 A61F13/4758
European: A61F13/472B A61F13/472C1 A61F13/472D A61F13/472E A61F13/475B
US: 604/385.01 604/385.17 604/385.24 604/385.27 D24/124

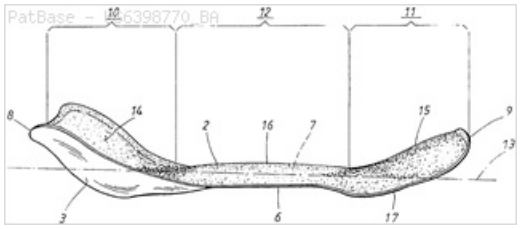

Family:

Publication number	Publication date	Application number	Application date
AT232076 E	20030215	AT19980956075T	19981117
AU199912679 A1	19990607	AU19990012679	19981117
AU741020 B2	20011122	AU19990012679	19981117
CL1998002793 A1	19990601	CL19980002793	19981119
CO5070629 A1	20010828	CO19980068217	19981119
DE69811267 D1	20030313	DE19986011267	19981117
DE69811267 T2	20031204	DE19986011267T	19981117
EP1033954 A1	20000913	EP19980956075	19981117
EP1033954 B1	20030205	EP19980956075	19981117
JP2001522695 T2	20011120	JP20000520720T	19981117
PE382000 A1	20000124	PE19980001117	19981117
PL340957 A1	20010312	PL19980340957	19981117
RU2000115570 A	20020627	RU20000115570	19981117
SE9704231 A	19990520	SE19970004231D	19971119
SE9704231 A0	19971119	SE19970004231	19971119
SE9704231 L	19990520	SE19970004231	19971119
SK200000576 A5	20001009	SK20000000576	19981117
TNSN98212 A1	20000613	TN1998SN00212	19981118
TNSN98212 A1	20001229	TN1998SN00212	19981118
US6398770 BA	20020604	US20000554183	20000511
WO9925282 A1	19990527	WO1998SE02066	19981117
ZA9810551 A	19990525	ZA19980010551	19981118

Priority:
SE19970004231 19971119 WO1998SE02066 19981117

Probable Assignee: SCA HYGIENE PRODUCTS AB

Assignee(s): (std): DREVIK SOLGUN ; MOELNLYCKE AB ; SCA HYGIENE PROD AB ; SCA HYGIENE PRODCUTS AB ; SCA HYGIENE PRODUCTS AB

Assignee(s): SCA HYGIENE PRODUCTS ABS ; SCA HYGIENE PRODUCTS AB GOETEBORG GOTENBURG ; SCA MOELNLYCKE AB

Inventor(s): (std): DREVIK SOLGUN ; SOLGUN DREVIK

Agent(s): WATERMARK PATENT AND TRADE MARKS ATTORNEYS; WATERMARK INTELLECTUAL PROPERTY PTY LTD; HARNECKER; ERNESTO CAVELIER

Designated states: AL AM AT AU AZ BA BB BE BF BG BJ BR BY CA CF CG CH CI CM CN CU CY CZ DE DK EE ES FI FR GA GB GE GH GM GN GR GW HR HU ID IE IL IS IT JP KE KG KP KR KZ LC LI LK LR LS LT LU LV MC MD MG MK ML MN MR MW MX NE NL NO NZ PL PT RO RU SD SE SG SI SK SL SN SZ TD TG TJ TM TR TT UA UG US UZ VN YU ZW

Legal status (INPADOC)

View legal status timeline

Patent	Date recorded	Event group	Code	Event	Details
AT232076 E	20030215	LSGT	+	granted / extensions (spc, cpc, pte)	
AT232076 E	20030815	LSLE	-RER	CEASED AS TO PARAGRAPH 5 LIT. 3 LAW INTRODUCING PATENT TREATIES	
AT232076 E	20181117	PEXP		Calculated Patent Term Expiry	
AU199912679 A1	19990607	LSPB	+	published / reissued	

AU741020 B2	20011122	LSGT	+	granted / extensions (spc, cpc, pte)	
AU741020 B2	20020321	LSGT	+FGA	LETTERS PATENT SEALED OR GRANTED (STANDARD PATENT)	
AU741020 B2	20181117	PEXP		Calculated Patent Term Expiry	
CL1998002793 A1	19990601	LSPB	+	published / reissued	
CO5070629 A1	20010828	LSPB	+	published / reissued	
DE69811267 T2	20031204	LSGT	+	granted / extensions (spc, cpc, pte)	
DE69811267 T2	20181117	PEXP		Calculated Patent Term Expiry	
EP1033954 A1	20000913	LSPB	+	published / reissued	
EP1033954 A1	20000913	LSES	+17P	REQUEST FOR EXAMINATION FILED	EFFECTIVE DATE : 20000414
EP1033954 A1	20001213	LSES	+17Q	FIRST EXAMINATION REPORT	EFFECTIVE DATE : 20001027
EP1033954 B1	20030205	LSGT	+	granted / extensions (spc, cpc, pte)	
EP1033954 B1	20030205	LSLE	-PG25	LAPSED IN A CONTRACTING STATE ANNOUNCED VIA POSTGRANT INFORM. FROM NAT. OFFICE TO EPO	COUNTRY OF REF DOCUMENT : AT NOTIFICATIONOFLAPSE : LAPSE BECAUSE OF FAILURE TO SUBMIT A TRANSLATION OF THE DESCRIPTION OR TO PAY THE FEE WITHIN THE PRESCRIBED TIME-LIMIT LAPSED DATE : 20030205
EP1033954 B1	20030205	LSLE	-PG25	LAPSED IN A CONTRACTING STATE ANNOUNCED VIA POSTGRANT INFORM. FROM NAT. OFFICE TO EPO	COUNTRY OF REF DOCUMENT : BE NOTIFICATIONOFLAPSE : LAPSE BECAUSE OF FAILURE TO SUBMIT A TRANSLATION OF THE DESCRIPTION OR TO PAY THE FEE WITHIN THE PRESCRIBED TIME-LIMIT LAPSED DATE : 20030205
EP1033954 B1	20030205	LSLE	-PG25	LAPSED IN A CONTRACTING STATE ANNOUNCED VIA POSTGRANT INFORM. FROM NAT. OFFICE TO EPO	COUNTRY OF REF DOCUMENT : CH NOTIFICATIONOFLAPSE : LAPSE BECAUSE OF FAILURE TO SUBMIT A TRANSLATION OF THE DESCRIPTION OR TO PAY THE FEE WITHIN THE PRESCRIBED TIME-LIMIT LAPSED DATE : 20030205
EP1033954 B1	20030205	LSLE	-PG25	LAPSED IN A CONTRACTING STATE ANNOUNCED VIA POSTGRANT INFORM. FROM NAT. OFFICE TO EPO	COUNTRY OF REF DOCUMENT : FI NOTIFICATIONOFLAPSE : LAPSE BECAUSE OF FAILURE TO SUBMIT A TRANSLATION OF THE DESCRIPTION OR TO PAY THE FEE WITHIN THE PRESCRIBED TIME-LIMIT LAPSED DATE : 20030205
EP1033954 B1	20030205	LSLE	-PG25	LAPSED IN A CONTRACTING STATE ANNOUNCED VIA POSTGRANT INFORM. FROM NAT. OFFICE TO EPO	COUNTRY OF REF DOCUMENT : GR NOTIFICATIONOFLAPSE : LAPSE BECAUSE OF FAILURE TO SUBMIT A TRANSLATION OF THE DESCRIPTION OR TO PAY THE FEE WITHIN THE PRESCRIBED TIME-LIMIT LAPSED DATE : 20030205
EP1033954 B1	20030205	LSLE	-PG25	LAPSED IN A CONTRACTING STATE ANNOUNCED VIA POSTGRANT INFORM. FROM NAT. OFFICE TO EPO	COUNTRY OF REF DOCUMENT : LI NOTIFICATIONOFLAPSE : LAPSE BECAUSE OF FAILURE TO SUBMIT A TRANSLATION OF THE DESCRIPTION OR TO PAY THE FEE WITHIN THE PRESCRIBED TIME-LIMIT LAPSED DATE : 20030205
EP1033954 B1	20030205	LSGT	REG	REFERENCE TO A NATIONAL CODE	REF COUNTRY CODE : GB REF LEGAL EVENT CODE : FG4D
EP1033954 B1	20030214	LSNP	REG	REFERENCE TO A	REF COUNTRY CODE : CH

				NATIONAL CODE	REF LEGAL EVENT CODE : EP
EP1033954 B1	20030305	LSGT	REG	REFERENCE TO A NATIONAL CODE	REF COUNTRY CODE : IE REF LEGAL EVENT CODE : FG4D
EP1033954 B1	20030505	LSLE	-PG25	LAPSED IN A CONTRACTING STATE ANNOUNCED VIA POSTGRANT INFORM. FROM NAT. OFFICE TO EPO	COUNTRY OF REF DOCUMENT : DK NOTIFICATIONOFLAPSE : LAPSE BECAUSE OF FAILURE TO SUBMIT A TRANSLATION OF THE DESCRIPTION OR TO PAY THE FEE WITHIN THE PRESCRIBED TIME-LIMIT LAPSED DATE : 20030505
EP1033954 B1	20030505	LSLE	-PG25	LAPSED IN A CONTRACTING STATE ANNOUNCED VIA POSTGRANT INFORM. FROM NAT. OFFICE TO EPO	COUNTRY OF REF DOCUMENT : PT NOTIFICATIONOFLAPSE : LAPSE BECAUSE OF FAILURE TO SUBMIT A TRANSLATION OF THE DESCRIPTION OR TO PAY THE FEE WITHIN THE PRESCRIBED TIME-LIMIT LAPSED DATE : 20030505
EP1033954 B1	20030505	LSLE	-PG25	LAPSED IN A CONTRACTING STATE ANNOUNCED VIA POSTGRANT INFORM. FROM NAT. OFFICE TO EPO	COUNTRY OF REF DOCUMENT : SE NOTIFICATIONOFLAPSE : LAPSE BECAUSE OF FAILURE TO SUBMIT A TRANSLATION OF THE DESCRIPTION OR TO PAY THE FEE WITHIN THE PRESCRIBED TIME-LIMIT LAPSED DATE : 20030505
EP1033954 B1	20030815	LSLE	REG	REFERENCE TO A NATIONAL CODE	REF COUNTRY CODE : CH REF LEGAL EVENT CODE : PL
EP1033954 B1	20030828	LSLE	-PG25	LAPSED IN A CONTRACTING STATE ANNOUNCED VIA POSTGRANT INFORM. FROM NAT. OFFICE TO EPO	COUNTRY OF REF DOCUMENT : ES NOTIFICATIONOFLAPSE : LAPSE BECAUSE OF FAILURE TO SUBMIT A TRANSLATION OF THE DESCRIPTION OR TO PAY THE FEE WITHIN THE PRESCRIBED TIME-LIMIT LAPSED DATE : 20030828
EP1033954 B1	20031117	LSLE	-PG25	LAPSED IN A CONTRACTING STATE ANNOUNCED VIA POSTGRANT INFORM. FROM NAT. OFFICE TO EPO	COUNTRY OF REF DOCUMENT : CY NOTIFICATIONOFLAPSE : LAPSE BECAUSE OF FAILURE TO SUBMIT A TRANSLATION OF THE DESCRIPTION OR TO PAY THE FEE WITHIN THE PRESCRIBED TIME-LIMIT LAPSED DATE : 20031117
EP1033954 B1	20031117	LSLE	-PG25	LAPSED IN A CONTRACTING STATE ANNOUNCED VIA POSTGRANT INFORM. FROM NAT. OFFICE TO EPO	COUNTRY OF REF DOCUMENT : IE NOTIFICATIONOFLAPSE : LAPSE BECAUSE OF NON-PAYMENT OF DUE FEES LAPSED DATE : 20031117
EP1033954 B1	20031117	LSLE	-PG25	LAPSED IN A CONTRACTING STATE ANNOUNCED VIA POSTGRANT INFORM. FROM NAT. OFFICE TO EPO	COUNTRY OF REF DOCUMENT : LU NOTIFICATIONOFLAPSE : LAPSE BECAUSE OF NON-PAYMENT OF DUE FEES LAPSED DATE : 20031117
EP1033954 B1	20031130	LSLE	-PG25	LAPSED IN A CONTRACTING STATE ANNOUNCED VIA POSTGRANT INFORM. FROM NAT. OFFICE TO EPO	COUNTRY OF REF DOCUMENT : MC NOTIFICATIONOFLAPSE : LAPSE BECAUSE OF NON-PAYMENT OF DUE FEES LAPSED DATE : 20031130
EP1033954 B1	20040128	LSGT	+26N	NO OPPOSITION FILED	EFFECTIVE DATE : 20031106
EP1033954 B1	20040825	LSLE	REG	REFERENCE TO A NATIONAL CODE	REF COUNTRY CODE : IE REF LEGAL EVENT CODE : MM4A
EP1033954 B1	20090130	LSFE	+PGFP	POSTGRANT: ANNUAL FEES PAID TO NATIONAL OFFICE	COUNTRY OF REF DOCUMENT : NL PAYMENT DATE : 20081125 YEAR OF FEE PAYMENT : 11

EP1033954 B1	20090331	LSFE	+PGFP	POSTGRANT: ANNUAL FEES PAID TO NATIONAL OFFICE	COUNTRY OF REF DOCUMENT : IT PAYMENT DATE : 20081125 YEAR OF FEE PAYMENT : 11
EP1033954 B1	20100623	LSLE	REG	REFERENCE TO A NATIONAL CODE	REF COUNTRY CODE : NL REF LEGAL EVENT CODE : V1 EFFECTIVE DATE : 20100601
EP1033954 B1	20101029	LSLE	-PG25	LAPSED IN A CONTRACTING STATE ANNOUNCED VIA POSTGRANT INFORM. FROM NAT. OFFICE TO EPO	COUNTRY OF REF DOCUMENT : NL NOTIFICATIONOFLAPSE : LAPSE BECAUSE OF NON-PAYMENT OF DUE FEES LAPSED DATE : 20100601
EP1033954 B1	20110331	LSLE	-PG25	LAPSED IN A CONTRACTING STATE ANNOUNCED VIA POSTGRANT INFORM. FROM NAT. OFFICE TO EPO	COUNTRY OF REF DOCUMENT : IT NOTIFICATIONOFLAPSE : LAPSE BECAUSE OF NON-PAYMENT OF DUE FEES LAPSED DATE : 20091117
EP1033954 B1	20151008	LSFE	REG	REFERENCE TO A NATIONAL CODE	REF COUNTRY CODE : FR REF LEGAL EVENT CODE : PLFP YEAR OF FEE PAYMENT : 18
EP1033954 B1	20160129	LSFE	+PGFP	POSTGRANT: ANNUAL FEES PAID TO NATIONAL OFFICE	COUNTRY OF REF DOCUMENT : GB PAYMENT DATE : 20151111 YEAR OF FEE PAYMENT : 18
EP1033954 B1	20160129	LSFE	+PGFP	POSTGRANT: ANNUAL FEES PAID TO NATIONAL OFFICE	COUNTRY OF REF DOCUMENT : DE PAYMENT DATE : 20151110 YEAR OF FEE PAYMENT : 18
EP1033954 B1	20160229	LSFE	+PGFP	POSTGRANT: ANNUAL FEES PAID TO NATIONAL OFFICE	COUNTRY OF REF DOCUMENT : FR PAYMENT DATE : 20151008 YEAR OF FEE PAYMENT : 18
EP1033954 B1	20170601	LSDW	REG	REFERENCE TO A NATIONAL CODE	REF COUNTRY CODE : DE REF LEGAL EVENT CODE : R119 REF DOCUMENT NUMBER : 69811267 COUNTRY OF REF DOCUMENT : DE
EP1033954 B1	20170726	LSLE	-GBPC	GB: EUROPEAN PATENT CEASED THROUGH NON-PAYMENT OF RENEWAL FEE	REF COUNTRY CODE : EP EFFECTIVE DATE : 20161117
EP1033954 B1	20170825	LSLE	REG	REFERENCE TO A NATIONAL CODE	REF COUNTRY CODE : FR REF LEGAL EVENT CODE : ST EFFECTIVE DATE : 20170731
EP1033954 B1	20171031	LSLE	-PG25	LAPSED IN A CONTRACTING STATE ANNOUNCED VIA POSTGRANT INFORM. FROM NAT. OFFICE TO EPO	COUNTRY OF REF DOCUMENT : FR NOTIFICATIONOFLAPSE : LAPSE BECAUSE OF NON-PAYMENT OF DUE FEES LAPSED DATE : 20161130
EP1033954 B1	20171130	LSLE	-PG25	LAPSED IN A CONTRACTING STATE ANNOUNCED VIA POSTGRANT INFORM. FROM NAT. OFFICE TO EPO	COUNTRY OF REF DOCUMENT : DE NOTIFICATIONOFLAPSE : LAPSE BECAUSE OF NON-PAYMENT OF DUE FEES LAPSED DATE : 20170601
EP1033954 B1	20171130	LSLE	-PG25	LAPSED IN A CONTRACTING STATE ANNOUNCED VIA POSTGRANT INFORM. FROM NAT. OFFICE TO EPO	COUNTRY OF REF DOCUMENT : GB NOTIFICATIONOFLAPSE : LAPSE BECAUSE OF NON-PAYMENT OF DUE FEES LAPSED DATE : 20161117
EP1033954 B1	20181117	PEXP		Calculated Patent Term Expiry	
JP2001522695 T2	20011120	LSPB	+	published / reissued	
PE382000 A1	20000124	LSPB	+	published / reissued	
PL340957 A1	20010312	LSPB	+	published / reissued	

PL340957 A1	20070731	LSWD	-DISC	DECISIONS ON DISCONTINUANCE OF THE PROCEEDINGS (TAKEN AFTER THE PUBLICATION OF THE PARTICULARS OF THE APPLICATIONS)	
RU2000115570 A	20020627	LSPB	+	published / reissued	
SE9704231 A	19990520	LSPB	+	published / reissued	
SE9704231 A	20030225	LSLE	-NAV	PATENT APPLICATION HAS LAPSED	
SE9704231 L	20030225	LSLE	-NAV	PATENT APPLICATION HAS LAPSED	
SK200000576 A5	20001009	LSPB	+	published / reissued	
TNSN98212 A1	20000613	LSPB	+	published / reissued	
TNSN98212 A1	20001229	LSPB	+	published / reissued	
US6398770 BA	20020604	LSGT	+	granted / extensions (spc, cpc, pte)	
US6398770 BA	20000511	LSAS	AS	ASSIGNMENT	PARTYTYPE : OWNER OWNER : SCA HYGIENE PRODUCTS AB, SWEDEN OLDPARTY : ASSIGNMENT OF ASSIGNORS INTEREST; ASSIGNOR:DREVIK, SOLGUN; REEL/FRAME:010834/0221 EFFECTIVE DATE : 20000405
US6398770 BA	20020517	LSGT	PAT1	Patented Case	
US6398770 BA	20051121	LSFE	+FPAY	FEE PAYMENT	YEAR OF FEE PAYMENT : 4
US6398770 BA	20091115	LSFE	+FPAY	FEE PAYMENT	YEAR OF FEE PAYMENT : 8
US6398770 BA	20131106	LSFE	+FPAY	FEE PAYMENT	YEAR OF FEE PAYMENT : 12
US6398770 BA	20200511	PEXP		Calculated Patent Term Expiry	
WO9925282 A1	19990527	LSPB	+	published / reissued	
WO9925282 A1	20000414	LSNP	+WWE	WIPO INFORMATION: ENTRY INTO NATIONAL PHASE	REF DOCUMENT NUMBER : 1998956075 COUNTRY OF REF DOCUMENT : EP
WO9925282 A1	20000414	LSNP	+WWE	WIPO INFORMATION: ENTRY INTO NATIONAL PHASE	REF DOCUMENT NUMBER : 504027 COUNTRY OF REF DOCUMENT : NZ
WO9925282 A1	20000420	LSNP	+WWE	WIPO INFORMATION: ENTRY INTO NATIONAL PHASE	REF DOCUMENT NUMBER : 5762000 COUNTRY OF REF DOCUMENT : SK
WO9925282 A1	20000511	LSNP	+WWE	WIPO INFORMATION: ENTRY INTO NATIONAL PHASE	REF DOCUMENT NUMBER : 09554183 COUNTRY OF REF DOCUMENT : US
WO9925282 A1	20000516	LSNP	+WWE	WIPO INFORMATION: ENTRY INTO NATIONAL PHASE	REF DOCUMENT NUMBER : PA/A/2000/004753 COUNTRY OF REF DOCUMENT : MX
WO9925282 A1	20000517	LSNP	+WWE	WIPO INFORMATION: ENTRY INTO NATIONAL PHASE	REF DOCUMENT NUMBER : 12679/99 COUNTRY OF REF DOCUMENT : AU
WO9925282 A1	20000519	LSNE	NENP	NON-ENTRY INTO THE NATIONAL PHASE IN:	REF COUNTRY CODE : KR
WO9925282 A1	20000913	LSPB	+WWP	WIPO INFORMATION: PUBLISHED IN NATIONAL OFFICE	REF DOCUMENT NUMBER : 1998956075 COUNTRY OF REF DOCUMENT : EP
WO9925282 A1	20000921	LSWD	REG	REFERENCE TO NATIONAL CODE	REF COUNTRY CODE : DE REF LEGAL EVENT CODE : 8642

WO9925282 A1	20010519	LSNE	NENP	NON-ENTRY INTO THE NATIONAL PHASE IN:	REF COUNTRY CODE : CA
WO9925282 A1	20020307	LSGT	+WWG	WIPO INFORMATION: GRANT IN NATIONAL OFFICE	REF DOCUMENT NUMBER : 12679/99 COUNTRY OF REF DOCUMENT : AU
WO9925282 A1	20030205	LSGT	+WWG	WIPO INFORMATION: GRANT IN NATIONAL OFFICE	REF DOCUMENT NUMBER : 1998956075 COUNTRY OF REF DOCUMENT : EP
ZA9810551 A	19990525	LSGT	+	granted / extensions (spc, cpc, pte)	
ZA9810551 A	20181117	PEXP		Calculated Patent Term Expiry	

11) Family number: 22083869 (US2408508A) © PatBase

Title: NONCHAFING CATAMENIAL PAD

Abstract: Source: US2408508A 1 A catamenial device comprising' a pad f _ . o predetermined shape including a body of absorbent material of substantially uniform thickness having a narrow rear end region, a relatively wider front end region, and an intermediate region of non-uniform width connecting said front and rear regions and providing converging side edges between said front and rear regions, said intermediate and rear end regions being sized and shaped to it against and conform to the anatomical contour of the external genitalia and the adjacent parts of the inner thighs of the wearer Without any substantial lateral compression of said absorbent pad, the over-all length of said absorbent pad being such as to extend from the anus to a point slightly beyond the nicns Veneris; and an open mesh gauze sheet of substantially greater length than said absorbent pad enclosing said pad and providing extensions extending rearwardly and forwardly of the ends of said pad adapted to be secured to a suitable sanitary belt, one thickness of said gauze sheet overlying the upper surface of said absorbent pad," the side edges of said sheet being folded in overlapping relation along the lower surface of said pad to provide more than two thicknesses of fabric, said overlapped portions being of a Width approximately equal to the narrow rear end region of said' absorbent pad and serving as a band-like support underlying the major portion of the area of said pad to prevent roping and twisting of said pad in use and to further provide a rearward gauze extension which will not' rope and produce a cutting effect in the gluteal fold, said pad being adapted to be worn with the narrow rear end region terminating at the anus, whereby the usual bunching and packing rearwardly of the anus is' eliminated and the discomfort to thewearer incident thereto is avoided,

Classifications:
International (IPC 8-9): A61F13/15 (Advanced/Invention);
A61F13/15 (Core/Invention)
International (IPC 1-7): A61F13/16
CPC: A61F13/47245 A61F13/47254
European: A61F13/472C1 A61F13/472C1B
US: 604/366 604/385.01

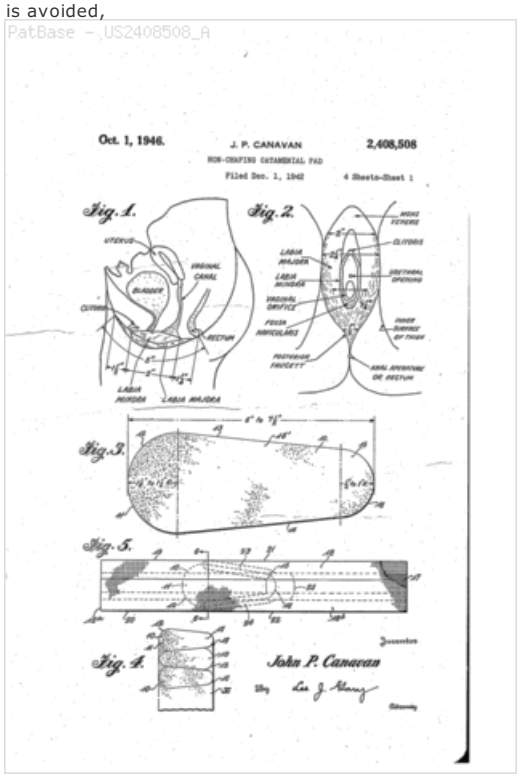

Family:

Publication number	Publication date	Application number	Application date
US2408508 A	19461001	US19420467491	19421201

Priority:
US19420467491 19421201

Probable Assignee: CANAVAN JOHN P
Assignee(s): (std): CANAVAN JOHN P
Inventor(s): (std): CANAVAN JOHN P

Legal status (INPADOC)

View legal status timeline

Patent	Date recorded	Event group	Code	Event	Details
US2408508 A	19461001	LSGT	+	granted / extensions (spc, cpc, pte)	

12) Family number: 24501925 (USD234162 S1) © PatBase

Classifications:
US: D24/125

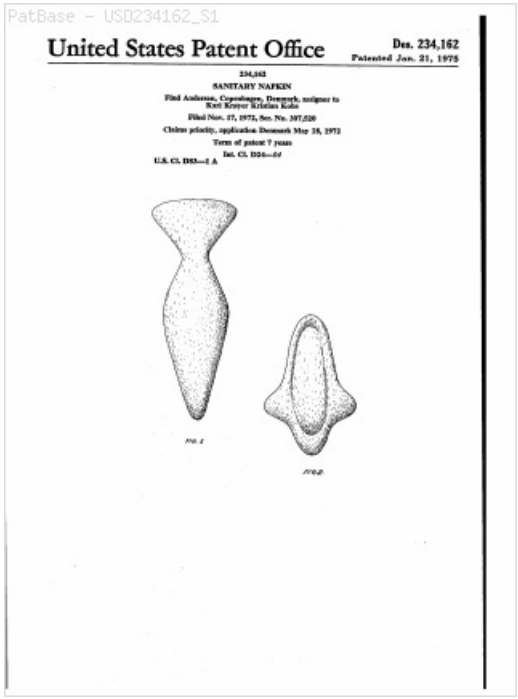

Family:

Publication number	Publication date	Application number	Application date
USD234162 S1	19750121		00000000

Legal status (INPADOC)

View legal status timeline

Patent	Date recorded	Event group	Code	Event	Details
USD234162 S1	19750121	LSGT	+	granted / extensions (spc, cpc, pte)	

13) Family number: 28261116 (US2002177830A) © PatBase

Title: Adaptable absorbent articles

Abstract: Source: US2002177830A A user adaptable absorbent article having a symmetrical silhouette with a first end and a second end, wherein the second end being in opposite relation to the first end, and a first longitudinally extending edge opposed to a second longitudinally extending edge, the longitudinally extending edges connecting the first end and the second end; a layered portion having an absorbent core with an asymmetric shape and a backsheet; and means for folding a portion of the absorbent article located either from or between at least one of the longitudinally extending edges and at least one of the ends, wherein the fold avoids the absorbent core.

Classifications:
International (IPC 8-9): A61F13/15 A61F13/47 A61F13/472 A61F13/474 (Advanced/Invention);
A61F13/15 (Core/Invention)
International (IPC 1-7): A61F13/15 A61F13/20 A61F13/47 A61F13/472 A61F13/474
CPC: A61F13/4704 A61F13/474
European: A61F13/474 A61F13/47B
US: 604/385.01 604/385.010P 604/385.03 604/385.030S 604/387 604/387S

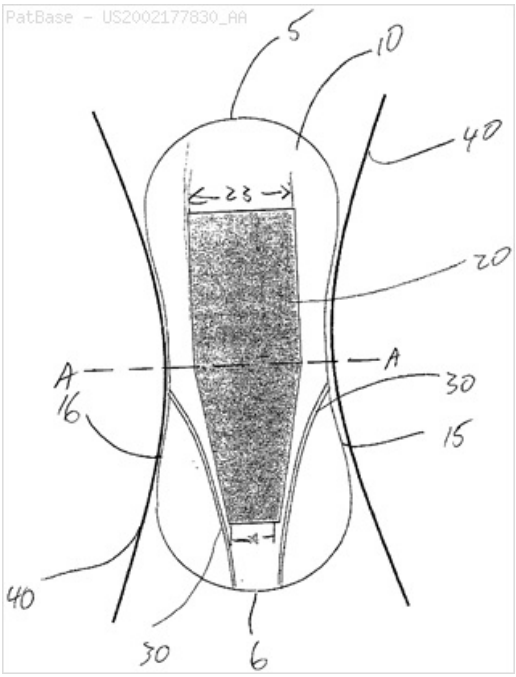

Family:

Publication number	Publication date	Application number	Application date
AR034706 AA	20040317	AR2002P101891	20020522
AT406148 E	20080915	AT20020253583T	20020522
AU200240683 A1	20021128	AU20020040683	20020516
AU200240683 A5	20021128	AU20020040683	20020516
BRPI0201914 A	20030422	BR2002PI01914	20020522
BRPI0201914 B1	20110726	BR2002PI01914	20020522
CA2386271 AA	20021123	CA20022386271	20020514
CA2386271 C	20091229	CA20022386271	20020514
CN1234330 C	20060104	CN20021020463	20020522
CN1386483 A	20021225	CN20021020463	20020522
DE60228520 D1	20081009	DE20026028520	20020522
DE60245747 D1	20131224	DE20026045747	20020522
EP1260205 A2	20021127	EP20020253583	20020522
EP1260205 A3	20040526	EP20020253583	20020522
EP1260205 B1	20080827	EP20020253583	20020522
EP1260205 B2	20121128	EP20020253583	20020522
EP1260205 B9	20090408	EP20020253583	20020522
EP1757257 A2	20070228	EP20060076526	20020522
EP1757257 A3	20070502	EP20060076526	20020522
EP1757257 B1	20131106	EP20060076526	20020522
ES2311579 T3	20090216	ES20020253583T	20020522
ES2311579 T5	20130313	ES20020253583T	20020522
MXPA02005128 A1	20031006	MX2002PA05128	20020520
US2002177830 AA	20021128	US20010863529	20010523
US2002177832 AA	20021128	US20010962425	20010925

Priority:

CA20022386271 20020514 EP20020253583 20020522 EP20060076526 20020522
US20010863529 20010523 US20010962425 20010925

Probable Assignee: MCNEIL PPC INC

Assignee(s): (std): JOHNSON AND JOHNSON ; MCNEIL PPC INC

Assignee(s): MCNEILL PPC INC SKILLMAN ; MANGIN SOPHIE ; FERNANDEZ KLEINLEIN ELENA

Inventor(s): (std): E FERNANDEZ KLEINE ; E FERNANDEZ KLEINE S MANGET ; FERNANDEZ KLEINE E ; FERNANDEZ KLEINKLEIN ELENA ; FERNANDEZ KLEINLEIN ELENA ; MANGET S ; MANGIN SOPHIE ; S MANGET ; MANGET E FERNANDEZ KLEINE S

Inventor(s): SOPHIE MANGIN ; ELENA FERNANDEZ KLEINLEIN

Agent(s): SHELSTON IP; SHELSTON IP PTY LTD; SMART AND BIGGAR; MUELLER BORE AND PARTNER PATENTANWAELTE PARTG MBB; MERCER CHRISTOPHER PAUL ET AL; MERCER CHRISTOPHER PAUL; CARPINTERO MARIO

Designated states: AT BE CH CY DE DK ES FI FR GB GR IE IT LI LU MC NL PT SE TR

Legal status (INPADOC)

View legal status timeline

Patent	Date recorded	Event group	Code	Event	Details
AR034706 AA	20040317	LSPB	+	published / reissued	
AR034706 AA	20081009	LSWD	-FB	SUSPENSION OF GRANTING PROCEDURE	
AT406148 E	20080915	LSGT	+	granted / extensions (spc, cpc, pte)	
AT406148 E	20090215	LSLE	-RER	CEASED AS TO PARAGRAPH 5 LIT. 3 LAW INTRODUCING PATENT TREATIES	
AT406148 E	20220522	PEXP		Calculated Patent Term Expiry	
AU200240683 A1	20021128	LSPB	+	published / reissued	
BRPI0201914 A	20030422	LSPB	+	published / reissued	
BRPI0201914 A	20100126	LSES	B07A	TECHNICAL EXAMINATION (OPINION): PUBLICATION OF TECHNICAL EXAMINATION (OPINION)	
BRPI0201914 A	20101103	LSGT	B09A	DECISION: INTENTION TO GRANT	
BRPI0201914 B1	20110726	LSGT	+B16A	PATENT OR CERTIFICATE OF ADDITION OF INVENTION GRANTED	TEXT : PRAZO DE VALIDADE: 20 (VINTE) ANOS CONTADOS A PARTIR DE 22/05/2002, OBSERVADAS AS CONDICOES LEGAIS.
BRPI0201914 B1	20220522	PEXP		Calculated Patent Term Expiry	
CA2386271 AA	20021123	LSPB	+	published / reissued	
CA2386271 AA	20070420	LSES	+EEER	EXAMINATION REQUEST	
CA2386271 C	20091229	LSGT	+	granted / extensions (spc, cpc, pte)	
CA2386271 C	20220514	PEXP		Calculated Patent Term Expiry	
CN1234330 C	20060104	LSGT	+	granted / extensions (spc, cpc, pte)	
CN1234330 C	20060104	LSGT	+C14	GRANT OF PATENT OR UTILITY MODEL	
CN1234330 C	20220522	PEXP		Calculated Patent Term Expiry	
CN1386483 A	20021225	LSPB	+	published / reissued	
CN1386483 A	20021225	LSPB	+C06	PUBLICATION	
DE60228520 D1	20090820	LSOP	-8363	OPPOSITION AGAINST THE PATENT	
DE60228520 D1	20130117	LSRE	R102	EPO DECISION MAINTAINING PATENT IN AMENDED FORM NOW FINAL	REF DOCUMENT NUMBER : 1260205 COUNTRY OF REF DOCUMENT : EP EFFECTIVE DATE : 20121128
EP1260205 A2	20021127	LSPB	+	published / reissued	
EP1260205 A2	20160729	LSFE	+PGFP	POSTGRANT: ANNUAL FEES PAID TO NATIONAL OFFICE	COUNTRY OF REF DOCUMENT : DE PAYMENT DATE : 20160518 YEAR OF FEE PAYMENT : 15
EP1260205 A2	20160729	LSFE	+PGFP	POSTGRANT: ANNUAL FEES PAID TO NATIONAL OFFICE	COUNTRY OF REF DOCUMENT : GB PAYMENT DATE : 20160518 YEAR OF FEE PAYMENT : 15

EP1260205 A2	20160831	LSFE	+PGFP	POSTGRANT: ANNUAL FEES PAID TO NATIONAL OFFICE	COUNTRY OF REF DOCUMENT : IT PAYMENT DATE : 20160524 YEAR OF FEE PAYMENT : 15
EP1260205 A2	20160831	LSFE	+PGFP	POSTGRANT: ANNUAL FEES PAID TO NATIONAL OFFICE	COUNTRY OF REF DOCUMENT : FR PAYMENT DATE : 20160412 YEAR OF FEE PAYMENT : 15
EP1260205 A3	20050105	LSES	+17P	REQUEST FOR EXAMINATION FILED	EFFECTIVE DATE : 20041105
EP1260205 A3	20050216	LSFE	+AKX	PAYMENT OF DESIGNATION FEES	COUNTRY OF REF DOCUMENT : AT COUNTRY OF REF DOCUMENT : BE COUNTRY OF REF DOCUMENT : CH COUNTRY OF REF DOCUMENT : CY COUNTRY OF REF DOCUMENT : DE COUNTRY OF REF DOCUMENT : DK COUNTRY OF REF DOCUMENT : ES COUNTRY OF REF DOCUMENT : FI COUNTRY OF REF DOCUMENT : FR COUNTRY OF REF DOCUMENT : GB COUNTRY OF REF DOCUMENT : GR COUNTRY OF REF DOCUMENT : IE COUNTRY OF REF DOCUMENT : IT COUNTRY OF REF DOCUMENT : LI COUNTRY OF REF DOCUMENT : LU COUNTRY OF REF DOCUMENT : MC COUNTRY OF REF DOCUMENT : NL COUNTRY OF REF DOCUMENT : PT COUNTRY OF REF DOCUMENT : SE COUNTRY OF REF DOCUMENT : TR
EP1260205 B1	20080827	LSGT	+	granted / extensions (spc, cpc, pte)	
EP1260205 B1	20080827	LSGT	REG	REFERENCE TO A NATIONAL CODE	REF COUNTRY CODE : GB REF LEGAL EVENT CODE : FG4D
EP1260205 B1	20080831	LSNP	REG	REFERENCE TO A NATIONAL CODE	REF COUNTRY CODE : CH REF LEGAL EVENT CODE : EP
EP1260205 B1	20081001	LSGT	REG	REFERENCE TO A NATIONAL CODE	REF COUNTRY CODE : IE REF LEGAL EVENT CODE : FG4D
EP1260205 B1	20090102	LSWD	REG	REFERENCE TO A NATIONAL CODE	REF COUNTRY CODE : HK REF LEGAL EVENT CODE : WD REF DOCUMENT NUMBER : 1048935 COUNTRY OF REF DOCUMENT : HK
EP1260205 B1	20090216	LSGT	REG	REFERENCE TO A NATIONAL CODE	REF COUNTRY CODE : ES REF LEGAL EVENT CODE : FG2A REF DOCUMENT NUMBER : 2311579 COUNTRY OF REF DOCUMENT : ES KIND CODE OF REF DOCUMENT : T3 DESIGNATED STATE(S) :
EP1260205 B1	20090227	LSLE	-PG25	LAPSED IN A CONTRACTING STATE ANNOUNCED VIA POSTGRANT INFORM. FROM NAT. OFFICE TO EPO	COUNTRY OF REF DOCUMENT : AT NOTIFICATIONOFLAPSE : LAPSE BECAUSE OF FAILURE TO SUBMIT A TRANSLATION OF THE DESCRIPTION OR TO PAY THE FEE WITHIN THE PRESCRIBED TIME-LIMIT LAPSED DATE : 20080827
EP1260205 B1	20090227	LSLE	-PG25	LAPSED IN A CONTRACTING STATE ANNOUNCED VIA POSTGRANT INFORM. FROM NAT. OFFICE TO EPO	COUNTRY OF REF DOCUMENT : FI NOTIFICATIONOFLAPSE : LAPSE BECAUSE OF FAILURE TO SUBMIT A TRANSLATION OF THE DESCRIPTION OR TO PAY THE FEE WITHIN THE PRESCRIBED TIME-LIMIT LAPSED DATE : 20080827
EP1260205 B1	20090331	LSLE	-PG25	LAPSED IN A CONTRACTING STATE ANNOUNCED VIA POSTGRANT INFORM. FROM NAT. OFFICE TO EPO	COUNTRY OF REF DOCUMENT : BE NOTIFICATIONOFLAPSE : LAPSE BECAUSE OF FAILURE TO SUBMIT A TRANSLATION OF THE DESCRIPTION OR TO PAY THE FEE WITHIN THE PRESCRIBED TIME-LIMIT LAPSED DATE : 20080827
EP1260205 B1	20220522	PEXP		Calculated Patent Term Expiry	
EP1260205 B2	20121128	LSGT	+	granted / extensions (spc, cpc, pte)	
EP1260205 B2	20121128	LSRE	27A	MAINTAINED AS	EFFECTIVE DATE : 20121128

				AMENDED	
EP1260205 B2	20130117	LSRE	REG	REFERENCE TO A NATIONAL CODE	REF COUNTRY CODE : DE REF LEGAL EVENT CODE : R102 REF DOCUMENT NUMBER : 60228520 COUNTRY OF REF DOCUMENT : DE EFFECTIVE DATE : 20121128
EP1260205 B2	20130227	LSNP	REG	REFERENCE TO A NATIONAL CODE	REF COUNTRY CODE : NL REF LEGAL EVENT CODE : T3
EP1260205 B2	20130313	LSRE	REG	REFERENCE TO A NATIONAL CODE	REF COUNTRY CODE : ES REF LEGAL EVENT CODE : DC2A REF DOCUMENT NUMBER : 2311579 COUNTRY OF REF DOCUMENT : ES KIND CODE OF REF DOCUMENT : T5 DESIGNATED STATE(S) : EFFECTIVE DATE : 20130313
EP1260205 B2	20150731	LSFE	+PGFP	POSTGRANT: ANNUAL FEES PAID TO NATIONAL OFFICE	COUNTRY OF REF DOCUMENT : ES PAYMENT DATE : 20150413 YEAR OF FEE PAYMENT : 14
EP1260205 B2	20150831	LSFE	+PGFP	POSTGRANT: ANNUAL FEES PAID TO NATIONAL OFFICE	COUNTRY OF REF DOCUMENT : NL PAYMENT DATE : 20150510 YEAR OF FEE PAYMENT : 14
EP1260205 B2	20150831	LSFE	+PGFP	POSTGRANT: ANNUAL FEES PAID TO NATIONAL OFFICE	COUNTRY OF REF DOCUMENT : IE PAYMENT DATE : 20150512 YEAR OF FEE PAYMENT : 14
EP1260205 B2	20160412	LSFE	REG	REFERENCE TO A NATIONAL CODE	COUNTRY OF REF DOCUMENT : FR REF COUNTRY CODE : FR REF LEGAL EVENT CODE : PLFP YEAR OF FEE PAYMENT : 15
EP1260205 B2	20170222	LSLE	REG	REFERENCE TO A NATIONAL CODE	REF COUNTRY CODE : IE REF LEGAL EVENT CODE : MM4A
EP1260205 B2	20170228	LSLE	-PG25	LAPSED IN A CONTRACTING STATE ANNOUNCED VIA POSTGRANT INFORM. FROM NAT. OFFICE TO EPO	COUNTRY OF REF DOCUMENT : NL NOTIFICATIONOFLAPSE : LAPSE BECAUSE OF NON-PAYMENT OF DUE FEES LAPSED DATE : 20160601
EP1260205 B2	20170413	LSFE	REG	REFERENCE TO A NATIONAL CODE	REF COUNTRY CODE : FR REF LEGAL EVENT CODE : PLFP YEAR OF FEE PAYMENT : 16
EP1260205 B2	20170531	LSLE	-PG25	LAPSED IN A CONTRACTING STATE ANNOUNCED VIA POSTGRANT INFORM. FROM NAT. OFFICE TO EPO	COUNTRY OF REF DOCUMENT : IE NOTIFICATIONOFLAPSE : LAPSE BECAUSE OF NON-PAYMENT OF DUE FEES LAPSED DATE : 20160522
EP1260205 B2	20170731	LSFE	+PGFP	POSTGRANT: ANNUAL FEES PAID TO NATIONAL OFFICE	COUNTRY OF REF DOCUMENT : FR PAYMENT DATE : 20170413 YEAR OF FEE PAYMENT : 16
EP1260205 B2	20170731	LSFE	+PGFP	POSTGRANT: ANNUAL FEES PAID TO NATIONAL OFFICE	COUNTRY OF REF DOCUMENT : GB PAYMENT DATE : 20170517 YEAR OF FEE PAYMENT : 16
EP1260205 B2	20170731	LSFE	+PGFP	POSTGRANT: ANNUAL FEES PAID TO NATIONAL OFFICE	COUNTRY OF REF DOCUMENT : DE PAYMENT DATE : 20170516 YEAR OF FEE PAYMENT : 16
EP1260205 B2	20171031	LSFE	+PGFP	POSTGRANT: ANNUAL FEES PAID TO NATIONAL OFFICE	COUNTRY OF REF DOCUMENT : IT PAYMENT DATE : 20170522 YEAR OF FEE PAYMENT : 16
EP1260205 B2	20220522	PEXP		Calculated Patent Term Expiry	
EP1260205 B9	20090430	LSLE	-PG25	LAPSED IN A CONTRACTING STATE ANNOUNCED VIA POSTGRANT INFORM. FROM NAT. OFFICE TO EPO	COUNTRY OF REF DOCUMENT : DK NOTIFICATIONOFLAPSE : LAPSE BECAUSE OF FAILURE TO SUBMIT A TRANSLATION OF THE DESCRIPTION OR TO PAY THE FEE WITHIN THE PRESCRIBED TIME-LIMIT LAPSED DATE : 20080827
EP1260205 B9	20090529	LSLE	-PG25	LAPSED IN A CONTRACTING STATE	COUNTRY OF REF DOCUMENT : PT NOTIFICATIONOFLAPSE : LAPSE

				ANNOUNCED VIA POSTGRANT INFORM. FROM NAT. OFFICE TO EPO	BECAUSE OF FAILURE TO SUBMIT A TRANSLATION OF THE DESCRIPTION OR TO PAY THE FEE WITHIN THE PRESCRIBED TIME-LIMIT LAPSED DATE : 20090127
EP1260205 B9	20090708	LSOP	-26	OPPOSITION FILED	PARTYTYPE : OPPONENT OPPONENT : THE PROCTER & GAMBLE COMMPANY EFFECTIVE DATE : 20090527
EP1260205 B9	20090901	LSOP	-NLR1	NL: OPPOSITION HAS BEEN FILED WITH THE EPO	PARTYTYPE : OPPONENT REF COUNTRY CODE : EP OPPONENT : THE PROCTER & GAMBLE COMMPANY
EP1260205 B9	20091231	LSLE	-PG25	LAPSED IN A CONTRACTING STATE ANNOUNCED VIA POSTGRANT INFORM. FROM NAT. OFFICE TO EPO	COUNTRY OF REF DOCUMENT : MC NOTIFICATIONOFLAPSE : LAPSE BECAUSE OF NON-PAYMENT OF DUE FEES LAPSED DATE : 20090531
EP1260205 B9	20091231	LSLE	REG	REFERENCE TO A NATIONAL CODE	REF COUNTRY CODE : CH REF LEGAL EVENT CODE : PL
EP1260205 B9	20100129	LSLE	-PG25	LAPSED IN A CONTRACTING STATE ANNOUNCED VIA POSTGRANT INFORM. FROM NAT. OFFICE TO EPO	COUNTRY OF REF DOCUMENT : CH NOTIFICATIONOFLAPSE : LAPSE BECAUSE OF NON-PAYMENT OF DUE FEES LAPSED DATE : 20090531
EP1260205 B9	20100129	LSLE	-PG25	LAPSED IN A CONTRACTING STATE ANNOUNCED VIA POSTGRANT INFORM. FROM NAT. OFFICE TO EPO	COUNTRY OF REF DOCUMENT : LI NOTIFICATIONOFLAPSE : LAPSE BECAUSE OF NON-PAYMENT OF DUE FEES LAPSED DATE : 20090531
EP1260205 B9	20100129	LSLE	-PG25	LAPSED IN A CONTRACTING STATE ANNOUNCED VIA POSTGRANT INFORM. FROM NAT. OFFICE TO EPO	COUNTRY OF REF DOCUMENT : SE NOTIFICATIONOFLAPSE : LAPSE BECAUSE OF FAILURE TO SUBMIT A TRANSLATION OF THE DESCRIPTION OR TO PAY THE FEE WITHIN THE PRESCRIBED TIME-LIMIT LAPSED DATE : 20081127
EP1260205 B9	20101029	LSLE	-PG25	LAPSED IN A CONTRACTING STATE ANNOUNCED VIA POSTGRANT INFORM. FROM NAT. OFFICE TO EPO	COUNTRY OF REF DOCUMENT : GR NOTIFICATIONOFLAPSE : LAPSE BECAUSE OF FAILURE TO SUBMIT A TRANSLATION OF THE DESCRIPTION OR TO PAY THE FEE WITHIN THE PRESCRIBED TIME-LIMIT LAPSED DATE : 20081128
EP1260205 B9	20110429	LSLE	-PG25	LAPSED IN A CONTRACTING STATE ANNOUNCED VIA POSTGRANT INFORM. FROM NAT. OFFICE TO EPO	COUNTRY OF REF DOCUMENT : LU NOTIFICATIONOFLAPSE : LAPSE BECAUSE OF NON-PAYMENT OF DUE FEES LAPSED DATE : 20090522
EP1260205 B9	20110831	LSLE	-PG25	LAPSED IN A CONTRACTING STATE ANNOUNCED VIA POSTGRANT INFORM. FROM NAT. OFFICE TO EPO	COUNTRY OF REF DOCUMENT : TR NOTIFICATIONOFLAPSE : LAPSE BECAUSE OF FAILURE TO SUBMIT A TRANSLATION OF THE DESCRIPTION OR TO PAY THE FEE WITHIN THE PRESCRIBED TIME-LIMIT LAPSED DATE : 20080827
EP1260205 B9	20110930	LSLE	-PG25	LAPSED IN A CONTRACTING STATE ANNOUNCED VIA POSTGRANT INFORM. FROM NAT. OFFICE TO EPO	COUNTRY OF REF DOCUMENT : CY NOTIFICATIONOFLAPSE : LAPSE BECAUSE OF FAILURE TO SUBMIT A TRANSLATION OF THE DESCRIPTION OR TO PAY THE FEE WITHIN THE PRESCRIBED TIME-LIMIT LAPSED DATE : 20080827
EP1260205 B9	20120307	LSRE	RIC2	CLASSIFICATION (CORRECTION)	CLASSIFICATIONSCHEME : IPC CLASSIFICATIONSYMBOL : A61F 13/472 20060101AFI20120131BHEP
EP1260205 B9	20120307	LSRE	RIC2	CLASSIFICATION (CORRECTION)	CLASSIFICATIONSCHEME : IPC CLASSIFICATIONSYMBOL : A61F 13/47 20060101ALI20120131BHEP

EP1260205 B9	20120307	LSRE	RIC2	CLASSIFICATION (CORRECTION)	CLASSIFICATIONSCHEME : IPC CLASSIFICATIONSYMBOL : A61F 13/474 20060101ALI20120131BHEP
EP1757257 A2	20070228	LSPB	+	published / reissued	
EP1757257 A2	20070502	LSRE	RIC1	CLASSIFICATION (CORRECTION)	CLASSIFICATIONSCHEME : IPC CLASSIFICATIONSYMBOL : A61F 13/15 20060101AFI20061127BHEP
EP1757257 A2	20070502	LSRE	RIC1	CLASSIFICATION (CORRECTION)	CLASSIFICATIONSCHEME : IPC CLASSIFICATIONSYMBOL : A61F 13/472 20060101ALI20070326BHEP
EP1757257 A2	20070502	LSRE	RIC1	CLASSIFICATION (CORRECTION)	CLASSIFICATIONSCHEME : IPC CLASSIFICATIONSYMBOL : A61F 13/474 20060101ALI20070326BHEP
EP1757257 A2	20071212	LSES	+17P	REQUEST FOR EXAMINATION FILED	EFFECTIVE DATE : 20071026
EP1757257 A2	20080109	LSFE	+AKX	PAYMENT OF DESIGNATION FEES	COUNTRY OF REF DOCUMENT : AT COUNTRY OF REF DOCUMENT : BE COUNTRY OF REF DOCUMENT : CH COUNTRY OF REF DOCUMENT : CY COUNTRY OF REF DOCUMENT : DE COUNTRY OF REF DOCUMENT : DK COUNTRY OF REF DOCUMENT : ES COUNTRY OF REF DOCUMENT : FI COUNTRY OF REF DOCUMENT : FR COUNTRY OF REF DOCUMENT : GB COUNTRY OF REF DOCUMENT : GR COUNTRY OF REF DOCUMENT : IE COUNTRY OF REF DOCUMENT : IT COUNTRY OF REF DOCUMENT : LI COUNTRY OF REF DOCUMENT : LU COUNTRY OF REF DOCUMENT : MC COUNTRY OF REF DOCUMENT : NL COUNTRY OF REF DOCUMENT : PT COUNTRY OF REF DOCUMENT : SE COUNTRY OF REF DOCUMENT : TR
EP1757257 A2	20080326	LSES	+17Q	FIRST EXAMINATION REPORT	EFFECTIVE DATE : 20080226
EP1757257 A2	20130327	LSRE	RIC1	CLASSIFICATION (CORRECTION)	CLASSIFICATIONSCHEME : IPC CLASSIFICATIONSYMBOL : A61F 13/474 20060101AFI20130220BHEP
EP1757257 A2	20130327	LSRE	RIC1	CLASSIFICATION (CORRECTION)	CLASSIFICATIONSCHEME : IPC CLASSIFICATIONSYMBOL : A61F 13/47 20060101ALI20130220BHEP
EP1757257 A2	20131106	LSGT	REG	REFERENCE TO A NATIONAL CODE	REF COUNTRY CODE : GB REF LEGAL EVENT CODE : FG4D
EP1757257 A2	20131115	LSNP	REG	REFERENCE TO A NATIONAL CODE	REF COUNTRY CODE : CH REF LEGAL EVENT CODE : EP
EP1757257 A2	20131215	LSNP	REG	REFERENCE TO A NATIONAL CODE	REF COUNTRY CODE : AT REF LEGAL EVENT CODE : REF REF DOCUMENT NUMBER : 638909 COUNTRY OF REF DOCUMENT : AT KIND CODE OF REF DOCUMENT : T DESIGNATED STATE(S) : EFFECTIVE DATE : 20131215
EP1757257 A2	20131218	LSGT	REG	REFERENCE TO A NATIONAL CODE	REF COUNTRY CODE : IE REF LEGAL EVENT CODE : FG4D
EP1757257 A2	20131224	LSPB	REG	REFERENCE TO A NATIONAL CODE	REF COUNTRY CODE : DE REF LEGAL EVENT CODE : R096 REF DOCUMENT NUMBER : 60245747 COUNTRY OF REF DOCUMENT : DE EFFECTIVE DATE : 20131224
EP1757257 A2	20140312	LSRV	REG	REFERENCE TO A NATIONAL CODE	REF COUNTRY CODE : NL REF LEGAL EVENT CODE : VDEP EFFECTIVE DATE : 20131106
EP1757257 A2	20140315	LSRV	REG	REFERENCE TO A NATIONAL CODE	REF COUNTRY CODE : AT REF LEGAL EVENT CODE : MK05 REF DOCUMENT NUMBER : 638909

					COUNTRY OF REF DOCUMENT : AT KIND CODE OF REF DOCUMENT : T DESIGNATED STATE(S) : EFFECTIVE DATE : 20131106
EP1757257 A2	20140430	LSLE	-PG25	LAPSED IN A CONTRACTING STATE ANNOUNCED VIA POSTGRANT INFORM. FROM NAT. OFFICE TO EPO	COUNTRY OF REF DOCUMENT : SE NOTIFICATIONOFLAPSE : LAPSE BECAUSE OF FAILURE TO SUBMIT A TRANSLATION OF THE DESCRIPTION OR TO PAY THE FEE WITHIN THE PRESCRIBED TIME-LIMIT LAPSED DATE : 20131106
EP1757257 A2	20140430	LSLE	-PG25	LAPSED IN A CONTRACTING STATE ANNOUNCED VIA POSTGRANT INFORM. FROM NAT. OFFICE TO EPO	COUNTRY OF REF DOCUMENT : FI NOTIFICATIONOFLAPSE : LAPSE BECAUSE OF FAILURE TO SUBMIT A TRANSLATION OF THE DESCRIPTION OR TO PAY THE FEE WITHIN THE PRESCRIBED TIME-LIMIT LAPSED DATE : 20131106
EP1757257 A2	20140430	LSLE	-PG25	LAPSED IN A CONTRACTING STATE ANNOUNCED VIA POSTGRANT INFORM. FROM NAT. OFFICE TO EPO	COUNTRY OF REF DOCUMENT : NL NOTIFICATIONOFLAPSE : LAPSE BECAUSE OF FAILURE TO SUBMIT A TRANSLATION OF THE DESCRIPTION OR TO PAY THE FEE WITHIN THE PRESCRIBED TIME-LIMIT LAPSED DATE : 20131106
EP1757257 A2	20140530	LSLE	-PG25	LAPSED IN A CONTRACTING STATE ANNOUNCED VIA POSTGRANT INFORM. FROM NAT. OFFICE TO EPO	COUNTRY OF REF DOCUMENT : BE NOTIFICATIONOFLAPSE : LAPSE BECAUSE OF FAILURE TO SUBMIT A TRANSLATION OF THE DESCRIPTION OR TO PAY THE FEE WITHIN THE PRESCRIBED TIME-LIMIT LAPSED DATE : 20131106
EP1757257 A2	20140530	LSLE	-PG25	LAPSED IN A CONTRACTING STATE ANNOUNCED VIA POSTGRANT INFORM. FROM NAT. OFFICE TO EPO	COUNTRY OF REF DOCUMENT : AT NOTIFICATIONOFLAPSE : LAPSE BECAUSE OF FAILURE TO SUBMIT A TRANSLATION OF THE DESCRIPTION OR TO PAY THE FEE WITHIN THE PRESCRIBED TIME-LIMIT LAPSED DATE : 20131106
EP1757257 A2	20140530	LSLE	-PG25	LAPSED IN A CONTRACTING STATE ANNOUNCED VIA POSTGRANT INFORM. FROM NAT. OFFICE TO EPO	COUNTRY OF REF DOCUMENT : ES NOTIFICATIONOFLAPSE : LAPSE BECAUSE OF FAILURE TO SUBMIT A TRANSLATION OF THE DESCRIPTION OR TO PAY THE FEE WITHIN THE PRESCRIBED TIME-LIMIT LAPSED DATE : 20131106
EP1757257 A2	20140630	LSLE	-PG25	LAPSED IN A CONTRACTING STATE ANNOUNCED VIA POSTGRANT INFORM. FROM NAT. OFFICE TO EPO	COUNTRY OF REF DOCUMENT : PT NOTIFICATIONOFLAPSE : LAPSE BECAUSE OF FAILURE TO SUBMIT A TRANSLATION OF THE DESCRIPTION OR TO PAY THE FEE WITHIN THE PRESCRIBED TIME-LIMIT LAPSED DATE : 20140306
EP1757257 A2	20140730	LSOP	-26	OPPOSITION FILED	PARTYTYPE : OPPONENT OPPONENT : KIMBERLY-CLARK WORLDWIDE, INC. EFFECTIVE DATE : 20140625
EP1757257 A2	20140904	LSOP	REG	REFERENCE TO A NATIONAL CODE	REF COUNTRY CODE : DE REF LEGAL EVENT CODE : R026 REF DOCUMENT NUMBER : 60245747 COUNTRY OF REF DOCUMENT : DE EFFECTIVE DATE : 20140625
EP1757257 A2	20140910	LSOP	-26	OPPOSITION FILED	PARTYTYPE : OPPONENT OPPONENT : THE PROCTER & GAMBLE COMMPANY EFFECTIVE DATE : 20140728
EP1757257 A2	20140917	LSOP	-26	OPPOSITION FILED	PARTYTYPE : OPPONENT OPPONENT : SCA HYGIENE PRODUCTS AB EFFECTIVE DATE : 20140806

EP1757257 A2	20140930	LSLE	-PG25	LAPSED IN A CONTRACTING STATE ANNOUNCED VIA POSTGRANT INFORM. FROM NAT. OFFICE TO EPO	COUNTRY OF REF DOCUMENT : DK NOTIFICATIONOFLAPSE : LAPSE BECAUSE OF FAILURE TO SUBMIT A TRANSLATION OF THE DESCRIPTION OR TO PAY THE FEE WITHIN THE PRESCRIBED TIME-LIMIT LAPSED DATE : 20131106
EP1757257 A2	20141112	LSOP	-R26	OPPOSITION FILED (CORRECTION)	PARTYTYPE : OPPONENT OPPONENT : SCA HYGIENE PRODUCTS AB EFFECTIVE DATE : 20140806
EP1757257 A2	20141231	LSLE	-PG25	LAPSED IN A CONTRACTING STATE ANNOUNCED VIA POSTGRANT INFORM. FROM NAT. OFFICE TO EPO	COUNTRY OF REF DOCUMENT : LU NOTIFICATIONOFLAPSE : LAPSE BECAUSE OF FAILURE TO SUBMIT A TRANSLATION OF THE DESCRIPTION OR TO PAY THE FEE WITHIN THE PRESCRIBED TIME-LIMIT LAPSED DATE : 20140522
EP1757257 A2	20141231	LSLE	REG	REFERENCE TO A NATIONAL CODE	REF COUNTRY CODE : CH REF LEGAL EVENT CODE : PL
EP1757257 A2	20150114	LSOP	-R26	OPPOSITION FILED (CORRECTION)	PARTYTYPE : OPPONENT OPPONENT : SCA HYGIENE PRODUCTS AB EFFECTIVE DATE : 20140806
EP1757257 A2	20150130	LSLE	-PG25	LAPSED IN A CONTRACTING STATE ANNOUNCED VIA POSTGRANT INFORM. FROM NAT. OFFICE TO EPO	COUNTRY OF REF DOCUMENT : LI NOTIFICATIONOFLAPSE : LAPSE BECAUSE OF NON-PAYMENT OF DUE FEES LAPSED DATE : 20140531
EP1757257 A2	20150130	LSLE	-PG25	LAPSED IN A CONTRACTING STATE ANNOUNCED VIA POSTGRANT INFORM. FROM NAT. OFFICE TO EPO	COUNTRY OF REF DOCUMENT : MC NOTIFICATIONOFLAPSE : LAPSE BECAUSE OF FAILURE TO SUBMIT A TRANSLATION OF THE DESCRIPTION OR TO PAY THE FEE WITHIN THE PRESCRIBED TIME-LIMIT LAPSED DATE : 20131106
EP1757257 A2	20150130	LSLE	-PG25	LAPSED IN A CONTRACTING STATE ANNOUNCED VIA POSTGRANT INFORM. FROM NAT. OFFICE TO EPO	COUNTRY OF REF DOCUMENT : CH NOTIFICATIONOFLAPSE : LAPSE BECAUSE OF NON-PAYMENT OF DUE FEES LAPSED DATE : 20140531
EP1757257 A2	20150225	LSLE	REG	REFERENCE TO A NATIONAL CODE	REF COUNTRY CODE : IE REF LEGAL EVENT CODE : MM4A
EP1757257 A2	20150430	LSLE	-PG25	LAPSED IN A CONTRACTING STATE ANNOUNCED VIA POSTGRANT INFORM. FROM NAT. OFFICE TO EPO	COUNTRY OF REF DOCUMENT : IE NOTIFICATIONOFLAPSE : LAPSE BECAUSE OF NON-PAYMENT OF DUE FEES LAPSED DATE : 20140522
EP1757257 A2	20160412	LSFE	REG	REFERENCE TO A NATIONAL CODE	REF COUNTRY CODE : FR REF LEGAL EVENT CODE : PLFP YEAR OF FEE PAYMENT : 15
EP1757257 A2	20160608	LSAS	RAP2	TRANSFER OF RIGHTS OF AN EP GRANTED PATENT	PARTYTYPE : OWNER OWNER : JOHNSON & JOHNSON CONSUMER INC.
EP1757257 A2	20160630	LSLE	-PG25	LAPSED IN A CONTRACTING STATE ANNOUNCED VIA POSTGRANT INFORM. FROM NAT. OFFICE TO EPO	COUNTRY OF REF DOCUMENT : GR NOTIFICATIONOFLAPSE : LAPSE BECAUSE OF FAILURE TO SUBMIT A TRANSLATION OF THE DESCRIPTION OR TO PAY THE FEE WITHIN THE PRESCRIBED TIME-LIMIT LAPSED DATE : 20140207
EP1757257 A2	20160630	LSLE	-PG25	LAPSED IN A CONTRACTING STATE ANNOUNCED VIA POSTGRANT INFORM. FROM NAT. OFFICE TO EPO	COUNTRY OF REF DOCUMENT : CY NOTIFICATIONOFLAPSE : LAPSE BECAUSE OF FAILURE TO SUBMIT A TRANSLATION OF THE DESCRIPTION OR TO PAY THE FEE WITHIN THE PRESCRIBED TIME-LIMIT LAPSED DATE : 20131106

EP1757257 A2	20160729	LSLE	-PG25	LAPSED IN A CONTRACTING STATE ANNOUNCED VIA POSTGRANT INFORM. FROM NAT. OFFICE TO EPO	COUNTRY OF REF DOCUMENT : TR NOTIFICATIONOFLAPSE : LAPSE BECAUSE OF FAILURE TO SUBMIT A TRANSLATION OF THE DESCRIPTION OR TO PAY THE FEE WITHIN THE PRESCRIBED TIME-LIMIT LAPSED DATE : 20131106
EP1757257 A2	20160729	LSFE	+PGFP	POSTGRANT: ANNUAL FEES PAID TO NATIONAL OFFICE	COUNTRY OF REF DOCUMENT : GB PAYMENT DATE : 20160518 YEAR OF FEE PAYMENT : 15
EP1757257 A2	20160729	LSFE	+PGFP	POSTGRANT: ANNUAL FEES PAID TO NATIONAL OFFICE	COUNTRY OF REF DOCUMENT : DE PAYMENT DATE : 20160518 YEAR OF FEE PAYMENT : 15
EP1757257 A2	20160831	LSFE	+PGFP	POSTGRANT: ANNUAL FEES PAID TO NATIONAL OFFICE	COUNTRY OF REF DOCUMENT : FR PAYMENT DATE : 20160412 YEAR OF FEE PAYMENT : 15
EP1757257 A2	20160831	LSFE	+PGFP	POSTGRANT: ANNUAL FEES PAID TO NATIONAL OFFICE	COUNTRY OF REF DOCUMENT : IT PAYMENT DATE : 20160524 YEAR OF FEE PAYMENT : 15
EP1757257 A2	20170413	LSFE	REG	REFERENCE TO A NATIONAL CODE	REF COUNTRY CODE : FR REF LEGAL EVENT CODE : PLFP YEAR OF FEE PAYMENT : 16
EP1757257 A2	20170731	LSFE	+PGFP	POSTGRANT: ANNUAL FEES PAID TO NATIONAL OFFICE	COUNTRY OF REF DOCUMENT : FR PAYMENT DATE : 20170413 YEAR OF FEE PAYMENT : 16
EP1757257 A2	20170731	LSFE	+PGFP	POSTGRANT: ANNUAL FEES PAID TO NATIONAL OFFICE	COUNTRY OF REF DOCUMENT : DE PAYMENT DATE : 20170516 YEAR OF FEE PAYMENT : 16
EP1757257 A2	20170731	LSFE	+PGFP	POSTGRANT: ANNUAL FEES PAID TO NATIONAL OFFICE	COUNTRY OF REF DOCUMENT : GB PAYMENT DATE : 20170517 YEAR OF FEE PAYMENT : 16
EP1757257 A2	20170831	LSFE	+PGFP	POSTGRANT: ANNUAL FEES PAID TO NATIONAL OFFICE	COUNTRY OF REF DOCUMENT : IT PAYMENT DATE : 20170522 YEAR OF FEE PAYMENT : 16
EP1757257 B1	20131106	LSGT	+	granted / extensions (spc, cpc, pte)	
EP1757257 B1	20220522	PEXP		Calculated Patent Term Expiry	
ES2311579 T3	20090216	LSGT	+	granted / extensions (spc, cpc, pte)	
ES2311579 T3	20220522	PEXP		Calculated Patent Term Expiry	
MXPA02005128 A1	20031006	LSPB	+	published / reissued	
MXPA02005128 A1	20090407	LSGT	+FG	GRANT OR REGISTRATION	
MXPA02005128 A1	20100812	LSRE	HH	CORRECTION OR CHANGE IN GENERAL	
US2002177830 AA	20021128	LSPB	+	published / reissued	
US2002177830 AA	20010921	LSAS	AS	ASSIGNMENT	PARTYTYPE : OWNER OWNER : MCNEIL-PPC, INC., NEW JERSEY OLDPARTY : ASSIGNMENT OF ASSIGNORS INTEREST; ASSIGNORS:FERNANDEZ-KLEINLEIN, ELENA; MANGIN, SOPHIE; REEL/FRAME:012184/0680 EFFECTIVE DATE : 20010904
US2002177830 AA	20030519	LSWD	-ABD3	Abandoned -- Failure to Respond to an Office Action	
US2002177832 AA	20021128	LSPB	+	published / reissued	
US2002177832 AA	20020306	LSAS	AS	ASSIGNMENT	PARTYTYPE : OWNER OWNER : MCNEIL-PPC, INC., NEW JERSEY OLDPARTY : ASSIGNMENT OF ASSIGNORS INTEREST; ASSIGNORS:FERNANDEZ-KLEINLEIN, ELENA; MANGIN, SOPHIE; REEL/FRAME:012673/0676

					EFFECTIVE DATE : 20010913
US2002177832 AA	20071022	LSWD	-ABD3	Abandoned -- Failure to Respond to an Office Action	

14) Family number: 28373282 (US6965058B)

Title: ABSORBENT ARTICLE

Abstract: Source: US6965058B Described is an absorbent article comprising a liquid-permeable layer (**18**) disposed towards the wearer's body when the said article is in use; a liquid-impermeable layer (**20**) disposed away from the wearer's body when the said article is in use; as well as an absorbent body arranged between the liquid-permeable layer (**18**) and the liquid-impermeable layer (**20**). The absorbent body comprises an absorbent material (**32**) which remains able to flow even after contact with a liquid. In addition, the invention discloses an absorbent article which comprises a liquid-impermeable layer disposed away from the wearer's body when the article is in use, as well as an absorbent body covered by a liquid-permeable layer; with the said absorbent body containing an absorbent material which remains able to flow even after contact with a liquid. In this, the absorbent body is connected to the liquid-impermeable layer in a central area of the said absorbent body.

Classifications:
International (IPC 8-9): A61F13/15 A61F13/49 A61F13/53 A61F5/44 A61L15/16 A61L15/20 A61L15/26 A61L15/60 E02D29/02 (Advanced/Invention);
A61F5/44 A61L15/60 E02D29/02 (Advanced/Non-invention);
A61F13/15 A61L15/16 (Core/Invention)
International (IPC 1-7): A61F13/15 A61F13/53 A61L15/60 E02D29/02
CPC: A61F13/4751 A61F13/47236 A61F13/4758 A61F13/536 A61L15/26 A61F13/47218 A61F13/53 A61F13/5323 A61F13/535 A61F13/8405 A61F2013/4708 E02D29/02 A61L15/60
European: A61F13/472B A61F13/472C A61F13/475A A61F13/475B A61F13/53 A61F13/532B A61F13/536 A61L15/26 A61L15/60 K61F13/47D K61F13/535 K61F13/84B
US: 604/367

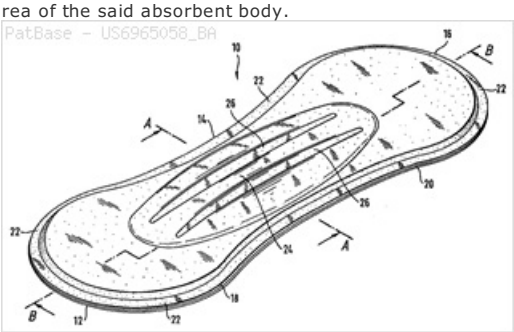

Family:

Publication number	Publication date	Application number	Application date
AR012169 AA	20000927	AR1998P101362	19980325
AT209049 E	20011215	AT19980917054T	19980323
AU199870401 A1	19981022	AU19980070401	19980323
AU723801 B2	20000907	AU19980070401	19980323
AU723801 C	20010719	AU19980070401	19980323
BRPI9808067 A	20000308	BR1998PI08067	19980323
BRPI9808067 B1	20110628	BR1998PI08067	19980323
CA2283406 AA	19990831	CA19982283406	19980323
CL1998000630 A1	19990309	CL19980000630	19980325
CN1121878 C	20030924	CN19988003647	19980323
CN1260726 A	20000719	CN19988003647	19980323
CO5060463 A1	20010730	CO19980016995	19980326
DE19713189 A1	19981001	DE19971013189	19970327
DE19806575 A1	19981001	DE19981006575	19980217
DE19880381 B3	20100506	DE19981080381	19980323
DE59802726 D1	20020221	DE19985002726	19980323
EP0971751 A1	20000119	EP19980917054	19980323
EP0971751 B1	20011121	EP19980917054	19980323
ES2167073 T3	20020501	ES19980917054T	19980323
HU0001692 AB	20000828	HU20000001692	19980323
HU0001692 AC	20000928	HU20000001692	19980323
ID25892 A	20001109	ID19990000972	19980323
IL131456 A0	20010128	IL19980131456	19980323
IL131456 A1	20040601	IL19980131456	19980323
IN00634MA1998 A	20061027	IN1998MA00634	19980326
IN208543 B	20070831	IN1998MA00634	19980326
JP2001517121 T2	20011002	JP19980541117T	19980323
JP4157167 B2	20080924	JP19980541117T	19980323
KR100367865 B1	20030124	KR20000026241	20000516
KR100623551 B1	20060913	KR19997008686	19980323
KR20010005620 A	20010115	KR19997008686	19980323
KR20010105620 A	20011129	KR20000026241	20000516
MY124644 A	20060630	MY19980001325	19980326
PA8449501 A1	20000524	PA19010084495	19980327
PE66299 A1	19990707	PE19980000217	19980325
PL190649 B1	20051230	PL19980335872	19980323
PL335872 A1	20000522	PL19980335872	19980323
RU2213548 C2	20031010	RU19990122589	19980323
RU99122589 A	20010810	RU19990122589	19980323
SK131399 A3	20000612	SK19990001313	19980323
SV1998000044 A	19990114	SV19980000044	19980326
TH34063 A	19990723	TH19981000992	19980323
TR9902370 T2	20000121	TR19990002370T	19980323
TW522830 Y	20030301	TW20010216259U	19980324
US6965058 BA	20051115	US20000402059	20000214
WO9843684 A1	19981008	WO1998EP01684	19980323
ZA9802605 A	19980930	ZA19980002605	19980327

Priority:

DE19971013189 19970327 DE19971013190 19970327 DE19981006575 19980217
DE19985002726 19980323 WO1998EP01684 19980323 KR20000026241 20000516
DE19981080381 19980323

Probable Assignee: HAKLE KIMBERLY DEUTSCHLAND GMBH

Assignee(s): (std): ASCHENBRENNER FRANZ FA ; HACK KIMBERLY DEUTSCHE GMBH ; HAKLE KIMBERLY DE GMBH ; HAKLE KIMBERLY DEUTSCHLAND GMBH ; KIMBERLY CLARK GMBH ; LEE JONG LIM ; RAIDEL MARIA ; KIMBERLEY CLARK GMBH ; KIMBERLI KLARK GMBKH ; ASCHENBRENNER FA FRANZ

Assignee(s): ASCHENBRENNER FRANZ ; KIMBERLY CLARK GMBH 56070 KOBLENZ DE ; KIMBERLY CLARK GMBH KOBLENZ ; KIMBERLI-KLARK GMBKH

Inventor(s): (std): RAJDEL MARIA ; RAIDEL MARIA ; RAIDEL M ; MARIA RAIDEL ; ASHENBRENNER FRANTS ; ASCHENBRENNER F ; ASCHENBRENNE FRANZ ; ASCHENBREENER F ; ASCHENBERENNER FRANZ ; RAIDEL MARIA DR ; FRANZ ASCHENBRENNER ; ASCHENBRENNER FRANZ ; LEE JONG HA

Inventor(s): DR MARIA RAIDEL ; ASCHENBRENNER FRANZ 92280 KASTL DE ; KIMBERLY CLARK GMBH ; RAJDEL' MARIA ; M RAIDEL ; FRANZ ASCHENBRENNE ; F ASCHENBRENNER ; F ASCHENBREENER

Agent(s): SPRUSON AND FERGUSON; ASPEN PHARMA PTY LTD; BORDEN LADNER GERVAIS LLP; SARGENT; RAMIRO CASTRO DUQUE; REINHOLD COHN AND PARTNERS; SANFORD TCOLB AND CO; PAULEY PETERSEN AND ERICKSON

Designated states: AL AM AT AU AZ BA BB BE BF BG BJ BR BY CA CF CG CH CI CM CN CU CZ DE DK EE ES FI FR GA GB GE GH GM GN GR GW HU ID IE IL IS IT JP KE KG KP KR KZ LC LI LK LR LS LT LU LV MC MD MG MK ML MN MR MW MX NE NL NO NZ PL PT RO RU SD SE SG SI SK SL SN SZ TD TG TJ TM TR TT UA UG US UZ VN YU ZW

Legal status (INPADOC)

View legal status timeline

Patent	Date recorded	Event group	Code	Event	Details
AR012169 AA	20000927	LSPB	+	published / reissued	
AR012169 AA	20051028	LSGT	+FG	GRANT, REGISTRATION	
AR012169 AA	20161116	LSGT	+FG	GRANT, REGISTRATION	
AT209049 E	20011215	LSGT	+	granted / extensions (spc, cpc, pte)	
AT209049 E	20030615	LSLE	-REN	CEASED DUE TO NON-PAYMENT OF THE ANNUAL FEE	
AT209049 E	20180323	PEXP		Calculated Patent Term Expiry	
AU199870401 A1	19981022	LSPB	+	published / reissued	
AU723801 B2	20000907	LSGT	+	granted / extensions (spc, cpc, pte)	
AU723801 B2	20010111	LSGT	+FGA	LETTERS PATENT SEALED OR GRANTED (STANDARD PATENT)	
AU723801 B2	20010125	LSRE	DA2	APPLICATIONS FOR AMENDMENT SECTION 104	TEXT : THE NATURE OF THE PROPOSED AMENDMENT IS AS SHOWN IN THE STATEMENT(S) FILED 20001218
AU723801 B2	20180323	PEXP		Calculated Patent Term Expiry	
AU723801 C	20010719	LSRE	DA3	AMENDMENTS MADE SECTION 104	TEXT : THE NATURE OF THE AMENDMENT IS AS WAS NOTIFIED IN THE OFFICIAL JOURNAL DATED 20010125
AU723801 C	20020606	LSAS	HB	ALTERATION OF NAME IN REGISTER	PARTYTYPE : OWNER OWNER : HAKLE-KIMBERLY DEUTSCHLAND GMBH OLDPARTY : FORMER NAME WAS: KIMBERLY-CLARK GMBH
BRPI9808067 A	20000308	LSPB	+	published / reissued	
BRPI9808067 A	20041214	LSAS	B25D	REQUESTED CHANGE OF NAME OF APPLICANT APPROVED	
BRPI9808067 A	20090901	LSGT	B09A	DECISION: INTENTION TO GRANT	
BRPI9808067 B1	20110628	LSGT	+B16A	PATENT OR CERTIFICATE OF ADDITION OF INVENTION GRANTED	TEXT : PRAZO DE VALIDADE: 10 (DEZ) ANOS CONTADOS A PARTIR DE 28/06/2011, OBSERVADAS AS CONDICOES LEGAIS.
BRPI9808067 B1	20180116	LSLE	-B21F	LAPSE ACC. ART. 78, ITEM IV - ON NON-PAYMENT OF THE	

				ANNUAL FEES IN TIME	
BRPI9808067 B1	20180323	PEXP		Calculated Patent Term Expiry	
CA2283406 AA	19990831	LSPB	+	published / reissued	
CA2283406 AA	20021203	LSES	+EEER	EXAMINATION REQUEST	
CA2283406 AA	20071105	LSLE	-FZDE	DEAD	
CL1998000630 A1	19990309	LSPB	+	published / reissued	
CN1121878 C	20030924	LSGT	+	granted / extensions (spc, cpc, pte)	
CN1121878 C	20030924	LSGT	+C14	GRANT OF PATENT OR UTILITY MODEL	
CN1121878 C	20061103	LSWD	REG	REFERENCE TO A NATIONAL CODE	REF COUNTRY CODE : HK REF LEGAL EVENT CODE : WD REF DOCUMENT NUMBER : 1028884 COUNTRY OF REF DOCUMENT : HK
CN1121878 C	20160511	LSRV	-EXPY	TERMINATION OF PATENT RIGHT OR UTILITY MODEL	
CN1121878 C	20180323	PEXP		Calculated Patent Term Expiry	
CN1260726 A	20000719	LSPB	+	published / reissued	
CN1260726 A	20000719	LSPB	+C06	PUBLICATION	
CO5060463 A1	20010730	LSPB	+	published / reissued	
DE19713189 A1	19981001	LSPB	+	published / reissued	
DE19713189 A1	20000420	LSES	+8110	REQUEST FOR EXAMINATION PARAGRAPH 44	
DE19713189 A1	20000713	LSWD	-8143	WITHDRAWN DUE TO CLAIMING INTERNAL PRIORITY	
DE19806575 A1	19981001	LSPB	+	published / reissued	
DE19806575 A1	20000420	LSES	+8110	REQUEST FOR EXAMINATION PARAGRAPH 44	
DE19806575 A1	20000706	LSWD	-8143	WITHDRAWN DUE TO CLAIMING INTERNAL PRIORITY	
DE19880381 B3	20100506	LSGT	+	granted / extensions (spc, cpc, pte)	
DE19880381 B3	20101104	LSGT	+8364	NO OPPOSITION DURING TERM OF OPPOSITION	
DE19880381 B3	20171003	LSDW	-R119	APPLICATION DEEMED WITHDRAWN, OR IP RIGHT LAPSED, DUE TO NON-PAYMENT OF RENEWAL FEE	
DE19880381 B3	20180323	PEXP		Calculated Patent Term Expiry	
DE59802726 D1	20020829	LSAS	8327	CHANGE IN THE PERSON/NAME/ADDRESS OF THE PATENT OWNER	PARTYTYPE : OWNER OWNER : HAKLE-KIMBERLY DEUTSCHLAND GMBH, 56070 KOBLENZ, DE
DE59802726 D1	20021219	LSGT	+8364	NO OPPOSITION DURING TERM OF OPPOSITION	
EP0971751 A1	20000119	LSPB	+	published / reissued	
EP0971751 A1	20000119	LSES	+17P	REQUEST FOR EXAMINATION FILED	EFFECTIVE DATE : 19991027
EP0971751 A1	20010110	LSES	+17Q	FIRST EXAMINATION REPORT	EFFECTIVE DATE : 20001122
EP0971751 B1	20011121	LSGT	+	granted / extensions (spc, cpc, pte)	
EP0971751 B1	20011130	LSNP	REG	REFERENCE TO A NATIONAL CODE	REF COUNTRY CODE : CH REF LEGAL EVENT CODE : EP

EP0971751 B1	20020221	LSLE	-PG25	LAPSED IN A CONTRACTING STATE ANNOUNCED VIA POSTGRANT INFORM. FROM NAT. OFFICE TO EPO	COUNTRY OF REF DOCUMENT : PT NOTIFICATIONOFLAPSE : LAPSE BECAUSE OF FAILURE TO SUBMIT A TRANSLATION OF THE DESCRIPTION OR TO PAY THE FEE WITHIN THE PRESCRIBED TIME-LIMIT LAPSED DATE : 20020221
EP0971751 B1	20020323	LSLE	-PG25	LAPSED IN A CONTRACTING STATE ANNOUNCED VIA POSTGRANT INFORM. FROM NAT. OFFICE TO EPO	COUNTRY OF REF DOCUMENT : AT NOTIFICATIONOFLAPSE : LAPSE BECAUSE OF NON-PAYMENT OF DUE FEES LAPSED DATE : 20020323
EP0971751 B1	20020331	LSLE	-PG25	LAPSED IN A CONTRACTING STATE ANNOUNCED VIA POSTGRANT INFORM. FROM NAT. OFFICE TO EPO	COUNTRY OF REF DOCUMENT : BE NOTIFICATIONOFLAPSE : LAPSE BECAUSE OF NON-PAYMENT OF DUE FEES LAPSED DATE : 20020331
EP0971751 B1	20020331	LSLE	-PG25	LAPSED IN A CONTRACTING STATE ANNOUNCED VIA POSTGRANT INFORM. FROM NAT. OFFICE TO EPO	COUNTRY OF REF DOCUMENT : CH NOTIFICATIONOFLAPSE : LAPSE BECAUSE OF NON-PAYMENT OF DUE FEES LAPSED DATE : 20020331
EP0971751 B1	20020331	LSLE	-PG25	LAPSED IN A CONTRACTING STATE ANNOUNCED VIA POSTGRANT INFORM. FROM NAT. OFFICE TO EPO	COUNTRY OF REF DOCUMENT : LI NOTIFICATIONOFLAPSE : LAPSE BECAUSE OF NON-PAYMENT OF DUE FEES LAPSED DATE : 20020331
EP0971751 B1	20020501	LSGT	REG	REFERENCE TO A NATIONAL CODE	REF COUNTRY CODE : ES REF LEGAL EVENT CODE : FG2A REF DOCUMENT NUMBER : 2167073 COUNTRY OF REF DOCUMENT : ES KIND CODE OF REF DOCUMENT : T3 DESIGNATED STATE(S) :
EP0971751 B1	20020703	LSAS	RAP2	TRANSFER OF RIGHTS OF AN EP GRANTED PATENT	PARTYTYPE : OWNER OWNER : HAKLE-KIMBERLY DEUTSCHLAND GMBH
EP0971751 B1	20020930	LSLE	-BERE	BE: LAPSED	PARTYTYPE : OWNER REF COUNTRY CODE : EP OWNER : *KIMBERLY-CLARK G.M.B.H. EFFECTIVE DATE : 20020331
EP0971751 B1	20021113	LSGT	+26N	NO OPPOSITION FILED	
EP0971751 B1	20021115	LSLE	REG	REFERENCE TO A NATIONAL CODE	REF COUNTRY CODE : CH REF LEGAL EVENT CODE : PL
EP0971751 B1	20060321	LSFE	+PGFP	POSTGRANT: ANNUAL FEES PAID TO NATIONAL OFFICE	COUNTRY OF REF DOCUMENT : ES PAYMENT DATE : 20060321 YEAR OF FEE PAYMENT : 9
EP0971751 B1	20070324	LSLE	-PG25	LAPSED IN A CONTRACTING STATE ANNOUNCED VIA POSTGRANT INFORM. FROM NAT. OFFICE TO EPO	COUNTRY OF REF DOCUMENT : SE NOTIFICATIONOFLAPSE : LAPSE BECAUSE OF NON-PAYMENT OF DUE FEES LAPSED DATE : 20070324
EP0971751 B1	20071120	LSLE	-EUG	SE: EUROPEAN PATENT HAS LAPSED	REF COUNTRY CODE : EP
EP0971751 B1	20080131	LSFE	+PGFP	POSTGRANT: ANNUAL FEES PAID TO NATIONAL OFFICE	COUNTRY OF REF DOCUMENT : SE PAYMENT DATE : 20060303 YEAR OF FEE PAYMENT : 9
EP0971751 B1	20080616	LSLE	REG	REFERENCE TO A NATIONAL CODE	REF COUNTRY CODE : ES REF LEGAL EVENT CODE : FD2A EFFECTIVE DATE : 20070324
EP0971751 B1	20080731	LSLE	-PG25	LAPSED IN A CONTRACTING STATE ANNOUNCED VIA POSTGRANT INFORM. FROM NAT. OFFICE TO EPO	COUNTRY OF REF DOCUMENT : ES NOTIFICATIONOFLAPSE : LAPSE BECAUSE OF NON-PAYMENT OF DUE FEES LAPSED DATE : 20070324

EP0971751 B1	20140430	LSFE	+PGFP	POSTGRANT: ANNUAL FEES PAID TO NATIONAL OFFICE	COUNTRY OF REF DOCUMENT : NL PAYMENT DATE : 20140326 YEAR OF FEE PAYMENT : 17
EP0971751 B1	20140530	LSFE	+PGFP	POSTGRANT: ANNUAL FEES PAID TO NATIONAL OFFICE	COUNTRY OF REF DOCUMENT : IT PAYMENT DATE : 20140324 YEAR OF FEE PAYMENT : 17
EP0971751 B1	20140630	LSFE	+PGFP	POSTGRANT: ANNUAL FEES PAID TO NATIONAL OFFICE	COUNTRY OF REF DOCUMENT : GB PAYMENT DATE : 20140327 YEAR OF FEE PAYMENT : 17
EP0971751 B1	20151125	LSLE	-GBPC	GB: EUROPEAN PATENT CEASED THROUGH NON-PAYMENT OF RENEWAL FEE	REF COUNTRY CODE : EP EFFECTIVE DATE : 20150323
EP0971751 B1	20151231	LSLE	-PG25	LAPSED IN A CONTRACTING STATE ANNOUNCED VIA POSTGRANT INFORM. FROM NAT. OFFICE TO EPO	COUNTRY OF REF DOCUMENT : IT NOTIFICATIONOFLAPSE : LAPSE BECAUSE OF NON-PAYMENT OF DUE FEES LAPSED DATE : 20150323
EP0971751 B1	20160129	LSLE	-PG25	LAPSED IN A CONTRACTING STATE ANNOUNCED VIA POSTGRANT INFORM. FROM NAT. OFFICE TO EPO	COUNTRY OF REF DOCUMENT : GB NOTIFICATIONOFLAPSE : LAPSE BECAUSE OF NON-PAYMENT OF DUE FEES LAPSED DATE : 20150323
EP0971751 B1	20160328	LSFE	REG	REFERENCE TO A NATIONAL CODE	REF COUNTRY CODE : FR REF LEGAL EVENT CODE : PLFP YEAR OF FEE PAYMENT : 19
EP0971751 B1	20160531	LSFE	+PGFP	POSTGRANT: ANNUAL FEES PAID TO NATIONAL OFFICE	COUNTRY OF REF DOCUMENT : FR PAYMENT DATE : 20160328 YEAR OF FEE PAYMENT : 19
EP0971751 B1	20160729	LSFE	+PGFP	POSTGRANT: ANNUAL FEES PAID TO NATIONAL OFFICE	COUNTRY OF REF DOCUMENT : DE PAYMENT DATE : 20160331 YEAR OF FEE PAYMENT : 19
EP0971751 B1	20170630	LSLE	-PG25	LAPSED IN A CONTRACTING STATE ANNOUNCED VIA POSTGRANT INFORM. FROM NAT. OFFICE TO EPO	COUNTRY OF REF DOCUMENT : NL NOTIFICATIONOFLAPSE : LAPSE BECAUSE OF NON-PAYMENT OF DUE FEES LAPSED DATE : 20150401
EP0971751 B1	20171003	LSDW	REG	REFERENCE TO A NATIONAL CODE	REF COUNTRY CODE : DE REF LEGAL EVENT CODE : R119 REF DOCUMENT NUMBER : 59802726 COUNTRY OF REF DOCUMENT : DE
EP0971751 B1	20171229	LSLE	REG	REFERENCE TO A NATIONAL CODE	REF COUNTRY CODE : FR REF LEGAL EVENT CODE : ST EFFECTIVE DATE : 20171130
EP0971751 B1	20180131	LSLE	-PG25	LAPSED IN A CONTRACTING STATE ANNOUNCED VIA POSTGRANT INFORM. FROM NAT. OFFICE TO EPO	COUNTRY OF REF DOCUMENT : DE NOTIFICATIONOFLAPSE : LAPSE BECAUSE OF NON-PAYMENT OF DUE FEES LAPSED DATE : 20171003
EP0971751 B1	20180131	LSLE	-PG25	LAPSED IN A CONTRACTING STATE ANNOUNCED VIA POSTGRANT INFORM. FROM NAT. OFFICE TO EPO	COUNTRY OF REF DOCUMENT : FR NOTIFICATIONOFLAPSE : LAPSE BECAUSE OF NON-PAYMENT OF DUE FEES LAPSED DATE : 20170331
EP0971751 B1	20180323	PEXP		Calculated Patent Term Expiry	
ES2167073 T3	20020501	LSGT	+	granted / extensions (spc, cpc, pte)	
ES2167073 T3	20180323	PEXP		Calculated Patent Term Expiry	
HU0001692 AB	20000828	LSPB	+	published / reissued	
ID25892 A	20001109	LSPB	+	published / reissued	

IL131456 A1	20040601	LSPB	+	published / reissued	
IL131456 A1	20041110	LSGT	+FF	PATENT GRANTED	
IL131456 A1	20080413	LSFE	+KB	PATENT RENEWED	
IL131456 A1	20121129	LSLE	-MM9K	PATENT NOT IN FORCE DUE TO NON-PAYMENT OF RENEWAL FEES	
IN00634MA1998 A	20061027	LSPB	+	published / reissued	
IN208543 B	20070831	LSGT	+	granted / extensions (spc, cpc, pte)	
IN208543 B	20180326	PEXP		Calculated Patent Term Expiry	
JP2001517121 T2	20011002	LSPB	+	published / reissued	
JP2001517121 T2	20050210	LSRE	A521	WRITTEN AMENDMENT	TEXT : JAPANESE INTERMEDIATE CODE: A523 EFFECTIVE DATE : 20050119
JP2001517121 T2	20050210	LSES	+A621	WRITTEN REQUEST FOR APPLICATION EXAMINATION	TEXT : JAPANESE INTERMEDIATE CODE: A621 EFFECTIVE DATE : 20050119
JP2001517121 T2	20071204	LSES	-A131	NOTIFICATION OF REASONS FOR REFUSAL	TEXT : JAPANESE INTERMEDIATE CODE: A131 EFFECTIVE DATE : 20071204
JP2001517121 T2	20080410	LSRE	A521	WRITTEN AMENDMENT	TEXT : JAPANESE INTERMEDIATE CODE: A523 EFFECTIVE DATE : 20080318
JP2001517121 T2	20080623	LSGT	+TRDD	DECISION OF GRANT OR REJECTION WRITTEN	
JP2001517121 T2	20080701	LSGT	+A01	WRITTEN DECISION TO GRANT A PATENT OR TO GRANT A REGISTRATION (UTILITY MODEL)	TEXT : JAPANESE INTERMEDIATE CODE: A01 EFFECTIVE DATE : 20080701
JP2001517121 T2	20080703	LSGT	+A01	WRITTEN DECISION TO GRANT A PATENT OR TO GRANT A REGISTRATION (UTILITY MODEL)	TEXT : JAPANESE INTERMEDIATE CODE: A01
JP2001517121 T2	20080717	LSFE	+A61	FIRST PAYMENT OF ANNUAL FEES (DURING GRANT PROCEDURE)	TEXT : JAPANESE INTERMEDIATE CODE: A61 EFFECTIVE DATE : 20080711
JP2001517121 T2	20080718	LSFE	+FPAY	RENEWAL FEE PAYMENT (EVENT DATE IS RENEWAL DATE OF DATABASE)	YEAR OF FEE PAYMENT : 3
JP2001517121 T2	20080718	LSGT	+R150	CERTIFICATE OF PATENT OR REGISTRATION OF UTILITY MODEL	TEXT : JAPANESE INTERMEDIATE CODE: R150
JP4157167 B2	20080924	LSGT	+	granted / extensions (spc, cpc, pte)	
JP4157167 B2	20091214	LSFE	+FPAY	RENEWAL FEE PAYMENT (EVENT DATE IS RENEWAL DATE OF DATABASE)	YEAR OF FEE PAYMENT : 3
JP4157167 B2	20110714	LSFE	+FPAY	RENEWAL FEE PAYMENT (EVENT DATE IS RENEWAL DATE OF DATABASE)	YEAR OF FEE PAYMENT : 3
JP4157167 B2	20110719	LSFE	+FPAY	RENEWAL FEE PAYMENT (EVENT DATE IS RENEWAL DATE OF DATABASE)	YEAR OF FEE PAYMENT : 4
JP4157167 B2	20120712	LSFE	+FPAY	RENEWAL FEE PAYMENT (EVENT DATE IS RENEWAL DATE OF DATABASE)	YEAR OF FEE PAYMENT : 4
JP4157167 B2	20120717	LSFE	+FPAY	RENEWAL FEE PAYMENT (EVENT DATE IS RENEWAL DATE OF DATABASE)	YEAR OF FEE PAYMENT : 5
JP4157167 B2	20130723	LSFE	+R250	RECEIPT OF ANNUAL FEES	TEXT : JAPANESE INTERMEDIATE CODE: R250

JP4157167 B2	20140718	LSLE	-LAPS	CANCELLATION BECAUSE OF NO PAYMENT OF ANNUAL FEES	
JP4157167 B2	20180323	PEXP		Calculated Patent Term Expiry	
KR100367865 B1	20030124	LSGT	+	granted / extensions (spc, cpc, pte)	
KR100367865 B1	20000516	LSES	A201	REQUEST FOR EXAMINATION	
KR100367865 B1	20000620	LSAS	N231	NOTIFICATION OF CHANGE OF APPLICANT	
KR100367865 B1	20021209	LSGT	+E701	DECISION TO GRANT OR REGISTRATION OF PATENT RIGHT	
KR100367865 B1	20021227	LSAS	N231	NOTIFICATION OF CHANGE OF APPLICANT	
KR100367865 B1	20021228	LSGT	+GRNT	WRITTEN DECISION TO GRANT	
KR100367865 B1	20121221	LSFE	FPAY	ANNUAL FEE PAYMENT	PAYMENT DATE : 20121221 YEAR OF FEE PAYMENT : 11
KR100367865 B1	20131220	LSFE	FPAY	ANNUAL FEE PAYMENT	PAYMENT DATE : 20131220 YEAR OF FEE PAYMENT : 12
KR100367865 B1	20141219	LSFE	FPAY	ANNUAL FEE PAYMENT	PAYMENT DATE : 20141219 YEAR OF FEE PAYMENT : 13
KR100367865 B1	20151229	LSLE	-LAPS	LAPSE DUE TO UNPAID ANNUAL FEE	
KR100367865 B1	20200516	PEXP		Calculated Patent Term Expiry	
KR100623551 B1	20060913	LSGT	+	granted / extensions (spc, cpc, pte)	
KR100623551 B1	20120823	LSFE	FPAY	ANNUAL FEE PAYMENT	PAYMENT DATE : 20120824 YEAR OF FEE PAYMENT : 7
KR100623551 B1	20130823	LSFE	FPAY	ANNUAL FEE PAYMENT	PAYMENT DATE : 20130826 YEAR OF FEE PAYMENT : 8
KR100623551 B1	20140907	LSLE	-LAPS	LAPSE DUE TO UNPAID ANNUAL FEE	
KR100623551 B1	20180323	PEXP		Calculated Patent Term Expiry	
KR20010005620 A	20010115	LSPB	+	published / reissued	
KR20010005620 A	20030108	LSES	A201	REQUEST FOR EXAMINATION	
KR20010005620 A	20030108	LSRE	AMND	AMENDMENT	
KR20010005620 A	20050429	LSES	-E902	NOTIFICATION OF REASON FOR REFUSAL	
KR20010005620 A	20051108	LSRV	-E601	DECISION TO REFUSE APPLICATION	
KR20010005620 A	20060109	LSRE	AMND	AMENDMENT	
KR20010005620 A	20060217	LSES	-E902	NOTIFICATION OF REASON FOR REFUSAL	
KR20010005620 A	20060818	LSGT	+B701	DECISION TO GRANT	
KR20010005620 A	20060906	LSGT	+GRNT	WRITTEN DECISION TO GRANT	
KR20010105620 A	20011129	LSPB	+	published / reissued	
MY124644 A	20060630	LSGT	+	granted / extensions (spc, cpc, pte)	
MY124644 A	20210630	PEXP		Calculated Patent Term Expiry	
PA8449501 A1	20000524	LSPB	+	published / reissued	
PE66299 A1	19990707	LSPB	+	published / reissued	
PE66299 A1	20020430	LSRV	-FC	REFUSAL	
PL190649 B1	20051230	LSGT	+	granted / extensions	

				(spc, cpc, pte)	
PL190649 B1	20110531	LSLE	-LAPS	DECISIONS ON THE LAPSE OF THE PROTECTION RIGHTS	EFFECTIVE DATE : 20100323
PL335872 A1	20000522	LSPB	+	published / reissued	
RU2213548 C2	20031010	LSGT	+	granted / extensions (spc, cpc, pte)	
RU2213548 C2	20050520	LSAS	PD4A	CORRECTION OF NAME OF PATENT OWNER	
RU2213548 C2	20051110	LSGT	+RH4A	COPY OF PATENT GRANTED THAT WAS DUPLICATED FOR THE RUSSIAN FEDERATION	EFFECTIVE DATE : 20050705
RU2213548 C2	20100720	LSLE	-MM4A	THE PATENT IS INVALID DUE TO NON-PAYMENT OF FEES	EFFECTIVE DATE : 20070324
RU2213548 C2	20180323	PEXP		Calculated Patent Term Expiry	
RU99122589 A	20010810	LSPB	+	published / reissued	
SK131399 A3	20000612	LSPB	+	published / reissued	
SV1998000044 A	19990114	LSPB	+	published / reissued	
TH34063 A	19990723	LSPB	+	published / reissued	
TR9902370 T2	20000121	LSPB	+	published / reissued	
TW522830 Y	20030301	LSGT	+	granted / extensions (spc, cpc, pte)	
TW522830 Y	20030725	LSGT	+GD4K	ISSUE OF PATENT CERTIFICATE FOR GRANTED UTILITY MODEL FILED BEFORE JUNE 30, 2004	
TW522830 Y	20070321	LSLE	-MM4K	ANNULMENT OR LAPSE OF A UTILITY MODEL DUE TO NON-PAYMENT OF FEES	
US6965058 BA	20051115	LSGT	+	granted / extensions (spc, cpc, pte)	
US6965058 BA	20000214	LSAS	AS	ASSIGNMENT	PARTYTYPE : OWNER OWNER : KIMBERLY-CLARK GMBH, GERMANY OLDPARTY : ASSIGNMENT OF ASSIGNORS INTEREST; ASSIGNORS:RAIDEL, MARIA; ASCHENBRENNER, FRANZ; REEL/FRAME:010581/0923; SIGNING DATES FROM 19991214 TO 19991215
US6965058 BA	20020626	LSAS	AS	ASSIGNMENT	PARTYTYPE : OWNER OWNER : HAKLE-KIMBERLY DEUTSCHLAND GMBH, GERMANY OLDPARTY : ASSIGNMENT OF ASSIGNORS INTEREST; ASSIGNOR:KIMBERLY-CLARK GMBH; REEL/FRAME:013037/0160 EFFECTIVE DATE : 20020607
US6965058 BA	20051026	LSGT	PAT1	Patented Case	
US6965058 BA	20060307	LSRE	CC	CERTIFICATE OF CORRECTION	
US6965058 BA	20090515	LSFE	+FPAY	FEE PAYMENT	YEAR OF FEE PAYMENT : 4
US6965058 BA	20130314	LSFE	+FPAY	FEE PAYMENT	YEAR OF FEE PAYMENT : 8
US6965058 BA	20171211	LSLE	-LAPS	LAPSE FOR FAILURE TO PAY MAINTENANCE FEES	TEXT : PATENT EXPIRED FOR FAILURE TO PAY MAINTENANCE FEES (ORIGINAL EVENT CODE: EXP.)
US6965058 BA	20171211	LSLE	-PEX1	Patent Expired Due to NonPayment of Maintenance Fees Under 37 CFR 1.362	
US6965058 BA	20180102	LSLE	-FP	EXPIRED DUE TO FAILURE TO PAY MAINTENANCE FEE	EFFECTIVE DATE : 20171115
US6965058 BA	20200214	PEXP		Calculated Patent Term	

WO9843684 A1	19981008	LSPB	+	Expiry published / reissued	
WO9843684 A1	19980323	LSNP	+WWE	WIPO INFORMATION: ENTRY INTO NATIONAL PHASE	REF DOCUMENT NUMBER : 131456 COUNTRY OF REF DOCUMENT : IL
WO9843684 A1	19990831	LSNP	ENP	ENTRY INTO THE NATIONAL PHASE IN:	REF DOCUMENT NUMBER : 2283406 COUNTRY OF REF DOCUMENT : CA
WO9843684 A1	19990831	LSNP	ENP	ENTRY INTO THE NATIONAL PHASE IN:	REF DOCUMENT NUMBER : 2283406 COUNTRY OF REF DOCUMENT : CA KIND CODE OF REF DOCUMENT : A DESIGNATED STATE(S) :
WO9843684 A1	19990907	LSNP	+WWE	WIPO INFORMATION: ENTRY INTO NATIONAL PHASE	REF DOCUMENT NUMBER : PA/A/1999/008227 COUNTRY OF REF DOCUMENT : MX
WO9843684 A1	19990922	LSNP	+WWE	WIPO INFORMATION: ENTRY INTO NATIONAL PHASE	REF DOCUMENT NUMBER : 1019997008686 COUNTRY OF REF DOCUMENT : KR
WO9843684 A1	19990923	LSNP	+WWE	WIPO INFORMATION: ENTRY INTO NATIONAL PHASE	REF DOCUMENT NUMBER : PV1999-3388 COUNTRY OF REF DOCUMENT : CZ
WO9843684 A1	19990924	LSNP	+WWE	WIPO INFORMATION: ENTRY INTO NATIONAL PHASE	REF DOCUMENT NUMBER : 131399 COUNTRY OF REF DOCUMENT : SK
WO9843684 A1	19990927	LSNP	ENP	ENTRY INTO THE NATIONAL PHASE IN:	REF DOCUMENT NUMBER : 1998 541117 COUNTRY OF REF DOCUMENT : JP KIND CODE OF REF DOCUMENT : A DESIGNATED STATE(S) :
WO9843684 A1	19991026	LSNP	+WWE	WIPO INFORMATION: ENTRY INTO NATIONAL PHASE	REF DOCUMENT NUMBER : 70401/98 COUNTRY OF REF DOCUMENT : AU
WO9843684 A1	19991027	LSNP	+WWE	WIPO INFORMATION: ENTRY INTO NATIONAL PHASE	REF DOCUMENT NUMBER : 1998917054 COUNTRY OF REF DOCUMENT : EP
WO9843684 A1	20000119	LSPB	+WWP	WIPO INFORMATION: PUBLISHED IN NATIONAL OFFICE	REF DOCUMENT NUMBER : 1998917054 COUNTRY OF REF DOCUMENT : EP
WO9843684 A1	20000214	LSNP	+WWE	WIPO INFORMATION: ENTRY INTO NATIONAL PHASE	REF DOCUMENT NUMBER : 09402059 COUNTRY OF REF DOCUMENT : US
WO9843684 A1	20000412	LSPB	+WWP	WIPO INFORMATION: PUBLISHED IN NATIONAL OFFICE	REF DOCUMENT NUMBER : PV1999-3388 COUNTRY OF REF DOCUMENT : CZ
WO9843684 A1	20001221	LSGT	+WWG	WIPO INFORMATION: GRANT IN NATIONAL OFFICE	REF DOCUMENT NUMBER : 70401/98 COUNTRY OF REF DOCUMENT : AU
WO9843684 A1	20010115	LSPB	+WWP	WIPO INFORMATION: PUBLISHED IN NATIONAL OFFICE	REF DOCUMENT NUMBER : 1019997008686 COUNTRY OF REF DOCUMENT : KR
WO9843684 A1	20011121	LSGT	+WWG	WIPO INFORMATION: GRANT IN NATIONAL OFFICE	REF DOCUMENT NUMBER : 1998917054 COUNTRY OF REF DOCUMENT : EP
WO9843684 A1	20020812	LSRV	-WWR	WIPO INFORMATION:	REF DOCUMENT NUMBER :

				REFUSED IN NATIONAL OFFICE	PV1999-3388 COUNTRY OF REF DOCUMENT : CZ
WO9843684 A1	20051108	LSRV	-WWR	WIPO INFORMATION: REFUSED IN NATIONAL OFFICE	REF DOCUMENT NUMBER : 1019997008686 COUNTRY OF REF DOCUMENT : KR
ZA9802605 A	19980930	LSGT	+	granted / extensions (spc, cpc, pte)	
ZA9802605 A	20180326	PEXP		Calculated Patent Term Expiry	

15) Family number: 29212158 (US2004002686A) © PatBase

Title: SANITARY NAPKIN WITH INTERGLUTEAL STRIP

Abstract: Source: US2004002686A A sanitary napkin has a strip that extends rearwardly to reside in the intergluteal crevice. The pad fits snugly against the body without penetrating. Because the strip provides improved body contact, similar protection is achieved with a smaller pad, thus providing a discretion benefit to the wearer.

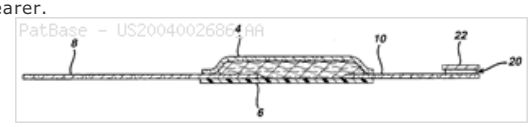

Classifications:
International (IPC 8-9): A61F13/15 A61F13/45 A61F13/56 A61F13/82 (Advanced/Invention); A61F13/15 A61F13/56 (Core/Invention)
International (IPC 1-7): A61F13/00 A61F13/15 A61F13/45 A61M35/00
CPC: A61F13/47227 A61F13/47245 A61F13/47272 A61F13/5605 A61F13/82
European: A61F13/472B1 A61F13/472C1 A61F13/472E A61F13/56B A61F13/82
US: 604/300 604/300P 604/385.01 604/385.03 604/385.04 604/385.05 604/385.17

Family:

Publication number	Publication date	Application number	Application date
TH53317 A	20020926	TH20021000580	20020221
TW553737 B	20030921	TW20020102142	20020207
US2004002686 AA	20040101	US20030397949	20030326
US6632210 BA	20031014	US20000747208	20001222

Priority:
US20000747208 20001222 US20030397949 20030326

Probable Assignee: MCNEIL PPC INC

Assignee(s): (std): MCNEIL PPC INC

Assignee(s): NEIL PPC INC ; SHABAZZ HOUSTON SAFIYYA ; RIAL ROBERT ; BARR JAMES P ; GELL CAROL B ; GLASGOW TARA ; LOUIE LAI HING ; LUIZZI JOSEPH ; MAVINKURVE PRAMOD S

Inventor(s): (std): BARR JAMES P ; GELL CAROL B ; GLASGOW TARA ; LOUIE LAI HING ; LUIZZI JOSEPH ; MAVINKURVE PRAMOD S ; RIAL ROBERT ; SHABAZZ HOUSTON SAFIYYA ; SHABAZZ HOUSTON SAFIYYA AND

Legal status (INPADOC)

View legal status timeline

Patent	Date recorded	Event group	Code	Event	Details
TH53317 A	20020926	LSPB	+	published / reissued	
TW553737 B	20030921	LSGT	+	granted / extensions (spc, cpc, pte)	
TW553737 B	20040212	LSGT	+GD4A	ISSUE OF PATENT CERTIFICATE FOR GRANTED INVENTION PATENT	
TW553737 B	20080711	LSLE	-MM4A	ANNULMENT OR LAPSE OF PATENT DUE TO NON-PAYMENT OF FEES	
TW553737 B	20220207	PEXP		Calculated Patent Term Expiry	
US2004002686 AA	20040101	LSPB	+	published / reissued	
US2004002686 AA	20070917	LSWD	-ABD1	Abandoned -- After Examiner's Answer or Board of Appeals Decision	
US6632210 BA	20031014	LSGT	+	granted / extensions (spc, cpc, pte)	
US6632210 BA	20010330	LSAS	AS	ASSIGNMENT	PARTYTYPE : OWNER OWNER : MCNEIL-PPC, INC., NEW JERSEY OLDPARTY : ASSIGNMENT OF ASSIGNORS INTEREST; ASSIGNORS:TARA GLASGOW; BARR, JAMES P.; GELL, CAROL B.; AND OTHERS; REEL/FRAME:011703/0936; SIGNING DATES FROM 20010201 TO 20010216

US6632210 BA	20040120	LSRE	CC	CERTIFICATE OF CORRECTION	
US6632210 BA	20070327	LSFE	+FPAY	FEE PAYMENT	YEAR OF FEE PAYMENT : 4
US6632210 BA	20111014	LSLE	-LAPS	LAPSE FOR FAILURE TO PAY MAINTENANCE FEES	
US6632210 BA	20111114	LSLE	-PEX1	Patent Expired Due to NonPayment of Maintenance Fees Under 37 CFR 1.362	
US6632210 BA	20111206	LSLE	-FP	EXPIRED DUE TO FAILURE TO PAY MAINTENANCE FEE	EFFECTIVE DATE : 20111014
US6632210 BA	20210531	PEXP		Calculated Patent Term Expiry (PTA 160 days)	

16) Family number: 34109544 (US2008103468A) © PatBase

Title: ABSORBENT ARTICLE HAVING IMPROVED FIT

Abstract: Source: US2008103468A An absorbent article 10 has front 12, crotch 14 and rear 16 portions. The article has an absorbent core 18 of unitary construction and of uniform density, which is defined by a pair of opposing longitudinal edges 20;22 and a pair of opposing transverse edges 24;26. The absorbent core 18 has at least a first 28 and a second 30 region, the average thickness of the absorbent core 18 in these first and second regions 28, 30 being lower than the average thickness of the absorbent core 18 surrounding the first and second regions 28;30, the first and second lower thickness regions 28;30 being arranged symmetrically about the longitudinal center line A of the article such that each of the first and second lower thickness regions 28;30 extends to the respective longitudinal edge 20;22 of the absorbent core. The distance a_x between the first and second lower thickness regions 28;30 in the transverse direction varying along the longitudinal direction of the article. A minimum distance a_1 between the first and second lower thickness regions 28;30 in the transverse direction is located at least in the transition 32 between the crotch portion 14 and the front portion 12. The article provides good, secure fit and high comfort to the wearer.

Classifications:
International (IPC 8-9): A61F13/15 A61F13/20 A61F13/47 A61F13/472 A61F13/53 A61F13/532 A61F13/533 A61F13/534 (Advanced/Invention); A61F13/15 (Core/Invention)
International (IPC 1-7): A61F13/532
CPC: A61F13/4704 A61F13/47218 A61F13/533
European: A61F13/472B A61F13/47B A61F13/533
US: 604/317 604/358 604/365 604/367 604/378 604/379 604/380 604/380P 604/382 604/384 604/385.01 604/385.010S 604/385.03 604/385.04

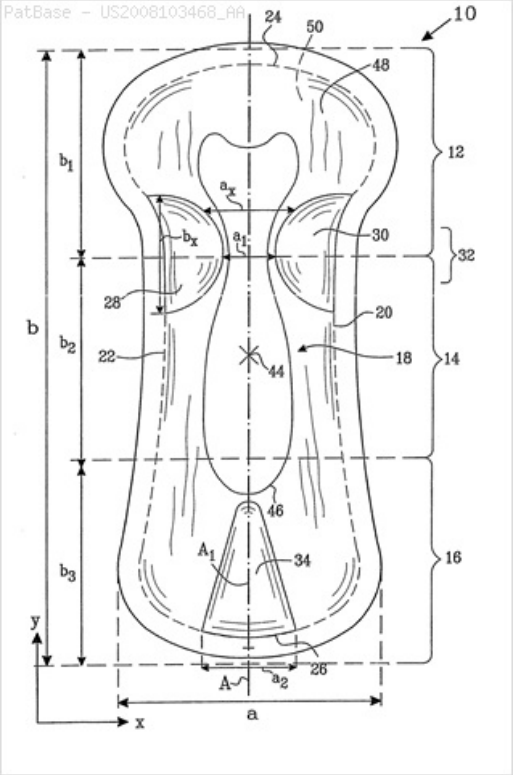

Family:

Publication number	Publication date	Application number	Application date
AU2005334268 AA	20070118	AU20050334268	20050713
AU2005334268 BB	20110825	AU20050334268	20050713
BRPI0520435 A2	20090512	BR2005PI20435	20050713
BRPI0520435 B1	20160503	BR2005PI20435	20050713
BRPI0520435 B8	20160823	BR2005PI20435	20050713
CA2611329 AA	20071206	CA20052611329	20050713
CN101203201 A	20080618	CN200580050173	20050713
CN101203201 B	20110608	CN200580050173	20050713
DE602005044593 D1	20141002	DE200560044593T	20050713
EG24914 A	20101221	EG20080010064	20080113
EP1901692 A1	20080326	EP20050758028	20050713
EP1901692 A4	20111019	EP20050758028	20050713
EP1901692 B1	20140827	EP20050758028	20050713
IN10149DN2007 A	20080620	IN2007DN10149	20071228
JP2009501053 T2	20090115	JP20080521348T	20050713
JP4954998 B2	20120620	JP20080521348T	20050713
MX2007015833 A1	20080409	MX20070015833	20050713
RU2008105414 A	20090820	RU20080105414	20050713
RU2379015 C2	20100120	RU20080105414	20050713
SA2316 B1	20091115	SA20060270216	20060713
TNSN08008 A1	20090714	TN2008SN00008	20080111
US2008103468 AA	20080501	US20070965898	20071228
US7825291 BB	20101102	US20070965898	20071228
WO07008125 A1	20070118	WO2005SE01150	20050713

Priority:

EP20050758028 20050713 RU20080105414 20050713 US20070965898 20071228

WO2005SE01150 20050713

Probable Assignee: SCA HYGIENE PRODUCTS AB

Assignee(s): (std): ELFSBERG CAMILLA ; SCA HYGIENE PROD AB ; SCA HYGIENE PRODUCTS AB ; WALLSTROEM LEIF

Assignee(s): WALLSTROM LEIF ; SKA KHAJDZHIN PRODAKTS AB

Inventor(s): (std): EHL FSBERG KAMILLA ; ELFSBERG CAMILLA ; WALLSTROEM LEIF ; WALSTLUN L ; WALLSTROM LEIF ; LEIF WALLSTROM ; VALL STREM LEJF ; ELFUSBELLI C ; CAMILLA ELFSBERG

Inventor(s): C ELFUSBELLI ; VALL'STREM LEJF ; L WALSTLUN ; LEIF WALLSTROEM ; EHL'FSBERG KAMILLA

Agent(s): WATERMARK INTELLECTUAL PROPERTY PTY LTD; WATERMARK PATENT AND TRADE MARKS ATTORNEYS; FETHERSTONHAUGH AND CO; VALEA AB; BUCHANAN INGERSOLL AND ROONEY PC

Designated states: AE AG AL AM AT AU AZ BA BB BE BF BG BJ BR BW BY BZ CA CF CG CH CI CM CN CO CR CU CY CZ DE DK DM DZ EC EE EG ES FI FR GA GB GD GE GH GM GN GQ GR GW HR HU ID IE IL IN IS IT JP KE KG KM KP KR KZ LC LI LK LR LS LT LU LV MA MC MD MG MK ML MN MR MW MX MZ NA NE NG NI NL NO NZ OM PG PH PL PT RO RU SC SD SE SG SI SK SL SM SN SY SZ TD TG TJ TM TN TR TT TZ UA UG US UZ VC VN YU ZA ZM ZW

Legal status (INPADOC)

View legal status timeline

Patent	Date recorded	Event group	Code	Event	Details
AU2005334268 AA	20070118	LSPB	+	published / reissued	
AU2005334268 BB	20110825	LSGT	+	granted / extensions (spc, cpc, pte)	
AU2005334268 BB	20120112	LSLE	-MK25	APPLICATION LAPSED REG. 22.2I(2) - FAILURE TO PAY ACCEPTANCE FEE	
AU2005334268 BB	20120202	LSGT	+FGA	LETTERS PATENT SEALED OR GRANTED (STANDARD PATENT)	
AU2005334268 BB	20130502	LSLI	GD	LICENCE REGISTERED	PARTYTYPE : LICENSEE LICENSEE : SCA HYGIENE AUSTRALIA PTY LTD
AU2005334268 BB	20250713	PEXP		Calculated Patent Term Expiry	
BRPI0520435 A2	20120612	LSFE	-B08F	APPLICATION FEES: DISMISSAL - ARTICLE 86 OF INDUSTRIAL PROPERTY LAW	TEXT : REFERENTE A 7A ANUIDADE.
BRPI0520435 A2	20120626	LSFE	B08H	APPLICATION FEES: DECISION CANCELLED	TEXT : REFERENTE A DESPACHO 8.6 NA RPI 2162 DE 12/06/2012.
BRPI0520435 A2	20160301	LSGT	B09A	DECISION: INTENTION TO GRANT	
BRPI0520435 B1	20160503	LSGT	+B16A	PATENT OR CERTIFICATE OF ADDITION OF INVENTION GRANTED	TEXT : PRAZO DE VALIDADE: 10 (DEZ) ANOS CONTADOS A PARTIR DE 03/05/2016, OBSERVADAS AS CONDICOES LEGAIS.
BRPI0520435 B1	20250713	PEXP		Calculated Patent Term Expiry	
CA2611329 AA	20071206	LSPB	+	published / reissued	
CA2611329 AA	20110713	LSLE	-FZDE	DEAD	
CN101203201 A	20080618	LSPB	+	published / reissued	
CN101203201 A	20080618	LSPB	+C06	PUBLICATION	
CN101203201 B	20110608	LSGT	+	granted / extensions (spc, cpc, pte)	
CN101203201 B	20110608	LSGT	+C14	GRANT OF PATENT OR UTILITY MODEL	
CN101203201 B	20250713	PEXP		Calculated Patent Term Expiry	
EG24914 A	20101221	LSGT	+	granted / extensions (spc, cpc, pte)	

EG24914 A	20280113	PEXP		Calculated Patent Term Expiry	
EP1901692 A1	20080326	LSPB	+	published / reissued	
EP1901692 A1	20080326	LSES	+17P	REQUEST FOR EXAMINATION FILED	EFFECTIVE DATE : 20071207
EP1901692 A1	20160831	LSFE	+PGFP	POSTGRANT: ANNUAL FEES PAID TO NATIONAL OFFICE	COUNTRY OF REF DOCUMENT : PL PAYMENT DATE : 20160610 YEAR OF FEE PAYMENT : 12
EP1901692 A1	20161031	LSFE	+PGFP	POSTGRANT: ANNUAL FEES PAID TO NATIONAL OFFICE	COUNTRY OF REF DOCUMENT : DE PAYMENT DATE : 20160708 YEAR OF FEE PAYMENT : 12
EP1901692 A1	20161031	LSFE	+PGFP	POSTGRANT: ANNUAL FEES PAID TO NATIONAL OFFICE	COUNTRY OF REF DOCUMENT : GB PAYMENT DATE : 20160707 YEAR OF FEE PAYMENT : 12
EP1901692 A1	20161130	LSFE	+PGFP	POSTGRANT: ANNUAL FEES PAID TO NATIONAL OFFICE	COUNTRY OF REF DOCUMENT : FR PAYMENT DATE : 20160722 YEAR OF FEE PAYMENT : 12
EP1901692 A4	20111019	LSES	+A4	DESPATCH OF SUPPLEMENTARY SEARCH REPORT	EFFECTIVE DATE : 20110916
EP1901692 A4	20111019	LSRE	RIC1	CLASSIFICATION (CORRECTION)	CLASSIFICATIONSCHEME : IPC CLASSIFICATIONSYMBOL : A61F 13/532 20060101AFI20110912BHEP
EP1901692 A4	20111019	LSRE	RIC1	CLASSIFICATION (CORRECTION)	CLASSIFICATIONSCHEME : IPC CLASSIFICATIONSYMBOL : A61F 13/15 20060101ALI20110912BHEP
EP1901692 A4	20140305	LSRE	RIC1	CLASSIFICATION (CORRECTION)	CLASSIFICATIONSCHEME : IPC CLASSIFICATIONSYMBOL : A61F 13/532 20060101ALI20140124BHEP
EP1901692 A4	20140305	LSRE	RIC1	CLASSIFICATION (CORRECTION)	CLASSIFICATIONSCHEME : IPC CLASSIFICATIONSYMBOL : A61F 13/472 20060101ALI20140124BHEP
EP1901692 A4	20140305	LSRE	RIC1	CLASSIFICATION (CORRECTION)	CLASSIFICATIONSCHEME : IPC CLASSIFICATIONSYMBOL : A61F 13/15 20060101AFI20140124BHEP
EP1901692 A4	20140305	LSRE	RIC1	CLASSIFICATION (CORRECTION)	CLASSIFICATIONSCHEME : IPC CLASSIFICATIONSYMBOL : A61F 13/47 20060101ALI20140124BHEP
EP1901692 A4	20140305	LSRE	RIC1	CLASSIFICATION (CORRECTION)	CLASSIFICATIONSCHEME : IPC CLASSIFICATIONSYMBOL : A61F 13/533 20060101ALI20140124BHEP
EP1901692 A4	20140312	LSGT	+INTG	ANNOUNCEMENT OF INTENTION TO GRANT	EFFECTIVE DATE : 20140211
EP1901692 B1	20140827	LSGT	+	granted / extensions (spc, cpc, pte)	
EP1901692 B1	20140827	LSGT	REG	REFERENCE TO A NATIONAL CODE	REF COUNTRY CODE : GB REF LEGAL EVENT CODE : FG4D
EP1901692 B1	20140829	LSNP	REG	REFERENCE TO A NATIONAL CODE	REF COUNTRY CODE : CH REF LEGAL EVENT CODE : EP
EP1901692 B1	20140915	LSNP	REG	REFERENCE TO A NATIONAL CODE	REF COUNTRY CODE : AT REF LEGAL EVENT CODE : REF REF DOCUMENT NUMBER : 684135 COUNTRY OF REF DOCUMENT : AT KIND CODE OF REF DOCUMENT : T DESIGNATED STATE(S) : EFFECTIVE DATE : 20140915
EP1901692 B1	20140924	LSGT	REG	REFERENCE TO A NATIONAL CODE	REF COUNTRY CODE : IE REF LEGAL EVENT CODE : FG4D
EP1901692 B1	20141002	LSPB	REG	REFERENCE TO A NATIONAL CODE	REF COUNTRY CODE : DE REF LEGAL EVENT CODE : R096 REF DOCUMENT NUMBER : 602005044593

					COUNTRY OF REF DOCUMENT : DE EFFECTIVE DATE : 20141002
EP1901692 B1	20150115	LSRV	REG	REFERENCE TO A NATIONAL CODE	REF COUNTRY CODE : AT REF LEGAL EVENT CODE : MK05 REF DOCUMENT NUMBER : 684135 COUNTRY OF REF DOCUMENT : AT KIND CODE OF REF DOCUMENT : T DESIGNATED STATE(S) : EFFECTIVE DATE : 20140827
EP1901692 B1	20150126	LSRV	REG	REFERENCE TO A NATIONAL CODE	REF COUNTRY CODE : LT REF LEGAL EVENT CODE : MG4D
EP1901692 B1	20150128	LSRV	REG	REFERENCE TO A NATIONAL CODE	REF COUNTRY CODE : NL REF LEGAL EVENT CODE : VDEP EFFECTIVE DATE : 20140827
EP1901692 B1	20150130	LSLE	-PG25	LAPSED IN A CONTRACTING STATE ANNOUNCED VIA POSTGRANT INFORM. FROM NAT. OFFICE TO EPO	COUNTRY OF REF DOCUMENT : PT NOTIFICATIONOFLAPSE : LAPSE BECAUSE OF FAILURE TO SUBMIT A TRANSLATION OF THE DESCRIPTION OR TO PAY THE FEE WITHIN THE PRESCRIBED TIME-LIMIT LAPSED DATE : 20141229
EP1901692 B1	20150130	LSLE	-PG25	LAPSED IN A CONTRACTING STATE ANNOUNCED VIA POSTGRANT INFORM. FROM NAT. OFFICE TO EPO	COUNTRY OF REF DOCUMENT : LT NOTIFICATIONOFLAPSE : LAPSE BECAUSE OF FAILURE TO SUBMIT A TRANSLATION OF THE DESCRIPTION OR TO PAY THE FEE WITHIN THE PRESCRIBED TIME-LIMIT LAPSED DATE : 20140827
EP1901692 B1	20150130	LSLE	-PG25	LAPSED IN A CONTRACTING STATE ANNOUNCED VIA POSTGRANT INFORM. FROM NAT. OFFICE TO EPO	COUNTRY OF REF DOCUMENT : FI NOTIFICATIONOFLAPSE : LAPSE BECAUSE OF FAILURE TO SUBMIT A TRANSLATION OF THE DESCRIPTION OR TO PAY THE FEE WITHIN THE PRESCRIBED TIME-LIMIT LAPSED DATE : 20140827
EP1901692 B1	20150130	LSLE	-PG25	LAPSED IN A CONTRACTING STATE ANNOUNCED VIA POSTGRANT INFORM. FROM NAT. OFFICE TO EPO	COUNTRY OF REF DOCUMENT : ES NOTIFICATIONOFLAPSE : LAPSE BECAUSE OF FAILURE TO SUBMIT A TRANSLATION OF THE DESCRIPTION OR TO PAY THE FEE WITHIN THE PRESCRIBED TIME-LIMIT LAPSED DATE : 20140827
EP1901692 B1	20150130	LSLE	-PG25	LAPSED IN A CONTRACTING STATE ANNOUNCED VIA POSTGRANT INFORM. FROM NAT. OFFICE TO EPO	COUNTRY OF REF DOCUMENT : BG NOTIFICATIONOFLAPSE : LAPSE BECAUSE OF FAILURE TO SUBMIT A TRANSLATION OF THE DESCRIPTION OR TO PAY THE FEE WITHIN THE PRESCRIBED TIME-LIMIT LAPSED DATE : 20141127
EP1901692 B1	20150130	LSLE	-PG25	LAPSED IN A CONTRACTING STATE ANNOUNCED VIA POSTGRANT INFORM. FROM NAT. OFFICE TO EPO	COUNTRY OF REF DOCUMENT : SE NOTIFICATIONOFLAPSE : LAPSE BECAUSE OF FAILURE TO SUBMIT A TRANSLATION OF THE DESCRIPTION OR TO PAY THE FEE WITHIN THE PRESCRIBED TIME-LIMIT LAPSED DATE : 20140827
EP1901692 B1	20150130	LSLE	-PG25	LAPSED IN A CONTRACTING STATE ANNOUNCED VIA POSTGRANT INFORM. FROM NAT. OFFICE TO EPO	COUNTRY OF REF DOCUMENT : GR NOTIFICATIONOFLAPSE : LAPSE BECAUSE OF FAILURE TO SUBMIT A TRANSLATION OF THE DESCRIPTION OR TO PAY THE FEE WITHIN THE PRESCRIBED TIME-LIMIT LAPSED DATE : 20141128
EP1901692 B1	20150227	LSLE	-PG25	LAPSED IN A CONTRACTING STATE ANNOUNCED VIA POSTGRANT INFORM. FROM NAT. OFFICE TO EPO	COUNTRY OF REF DOCUMENT : AT NOTIFICATIONOFLAPSE : LAPSE BECAUSE OF FAILURE TO SUBMIT A TRANSLATION OF THE DESCRIPTION OR TO PAY THE FEE WITHIN THE PRESCRIBED TIME-LIMIT LAPSED DATE : 20140827
EP1901692 B1	20150227	LSLE	-PG25	LAPSED IN A CONTRACTING STATE ANNOUNCED VIA POSTGRANT INFORM. FROM NAT. OFFICE TO EPO	COUNTRY OF REF DOCUMENT : CY NOTIFICATIONOFLAPSE : LAPSE BECAUSE OF FAILURE TO SUBMIT A TRANSLATION OF THE DESCRIPTION OR TO PAY THE FEE WITHIN THE PRESCRIBED TIME-LIMIT LAPSED DATE : 20140827

EP1901692 B1	20150227	LSLE	-PG25	LAPSED IN A CONTRACTING STATE ANNOUNCED VIA POSTGRANT INFORM. FROM NAT. OFFICE TO EPO	COUNTRY OF REF DOCUMENT : IS NOTIFICATIONOFLAPSE : LAPSE BECAUSE OF FAILURE TO SUBMIT A TRANSLATION OF THE DESCRIPTION OR TO PAY THE FEE WITHIN THE PRESCRIBED TIME-LIMIT LAPSED DATE : 20141227
EP1901692 B1	20150227	LSLE	-PG25	LAPSED IN A CONTRACTING STATE ANNOUNCED VIA POSTGRANT INFORM. FROM NAT. OFFICE TO EPO	COUNTRY OF REF DOCUMENT : LV NOTIFICATIONOFLAPSE : LAPSE BECAUSE OF FAILURE TO SUBMIT A TRANSLATION OF THE DESCRIPTION OR TO PAY THE FEE WITHIN THE PRESCRIBED TIME-LIMIT LAPSED DATE : 20140827
EP1901692 B1	20150331	LSLE	-PG25	LAPSED IN A CONTRACTING STATE ANNOUNCED VIA POSTGRANT INFORM. FROM NAT. OFFICE TO EPO	COUNTRY OF REF DOCUMENT : NL NOTIFICATIONOFLAPSE : LAPSE BECAUSE OF FAILURE TO SUBMIT A TRANSLATION OF THE DESCRIPTION OR TO PAY THE FEE WITHIN THE PRESCRIBED TIME-LIMIT LAPSED DATE : 20140827
EP1901692 B1	20150430	LSLE	-PG25	LAPSED IN A CONTRACTING STATE ANNOUNCED VIA POSTGRANT INFORM. FROM NAT. OFFICE TO EPO	COUNTRY OF REF DOCUMENT : CZ NOTIFICATIONOFLAPSE : LAPSE BECAUSE OF FAILURE TO SUBMIT A TRANSLATION OF THE DESCRIPTION OR TO PAY THE FEE WITHIN THE PRESCRIBED TIME-LIMIT LAPSED DATE : 20140827
EP1901692 B1	20150430	LSLE	-PG25	LAPSED IN A CONTRACTING STATE ANNOUNCED VIA POSTGRANT INFORM. FROM NAT. OFFICE TO EPO	COUNTRY OF REF DOCUMENT : IT NOTIFICATIONOFLAPSE : LAPSE BECAUSE OF FAILURE TO SUBMIT A TRANSLATION OF THE DESCRIPTION OR TO PAY THE FEE WITHIN THE PRESCRIBED TIME-LIMIT LAPSED DATE : 20140827
EP1901692 B1	20150430	LSLE	-PG25	LAPSED IN A CONTRACTING STATE ANNOUNCED VIA POSTGRANT INFORM. FROM NAT. OFFICE TO EPO	COUNTRY OF REF DOCUMENT : RO NOTIFICATIONOFLAPSE : LAPSE BECAUSE OF FAILURE TO SUBMIT A TRANSLATION OF THE DESCRIPTION OR TO PAY THE FEE WITHIN THE PRESCRIBED TIME-LIMIT LAPSED DATE : 20140827
EP1901692 B1	20150430	LSLE	-PG25	LAPSED IN A CONTRACTING STATE ANNOUNCED VIA POSTGRANT INFORM. FROM NAT. OFFICE TO EPO	COUNTRY OF REF DOCUMENT : EE NOTIFICATIONOFLAPSE : LAPSE BECAUSE OF FAILURE TO SUBMIT A TRANSLATION OF THE DESCRIPTION OR TO PAY THE FEE WITHIN THE PRESCRIBED TIME-LIMIT LAPSED DATE : 20140827
EP1901692 B1	20150430	LSLE	-PG25	LAPSED IN A CONTRACTING STATE ANNOUNCED VIA POSTGRANT INFORM. FROM NAT. OFFICE TO EPO	COUNTRY OF REF DOCUMENT : SK NOTIFICATIONOFLAPSE : LAPSE BECAUSE OF FAILURE TO SUBMIT A TRANSLATION OF THE DESCRIPTION OR TO PAY THE FEE WITHIN THE PRESCRIBED TIME-LIMIT LAPSED DATE : 20140827
EP1901692 B1	20150430	LSLE	-PG25	LAPSED IN A CONTRACTING STATE ANNOUNCED VIA POSTGRANT INFORM. FROM NAT. OFFICE TO EPO	COUNTRY OF REF DOCUMENT : DK NOTIFICATIONOFLAPSE : LAPSE BECAUSE OF FAILURE TO SUBMIT A TRANSLATION OF THE DESCRIPTION OR TO PAY THE FEE WITHIN THE PRESCRIBED TIME-LIMIT LAPSED DATE : 20140827
EP1901692 B1	20150528	LSRE	REG	REFERENCE TO A NATIONAL CODE	REF COUNTRY CODE : DE REF LEGAL EVENT CODE : R097 REF DOCUMENT NUMBER : 602005044593 COUNTRY OF REF DOCUMENT : DE
EP1901692 B1	20150805	LSGT	+26N	NO OPPOSITION FILED	EFFECTIVE DATE : 20150528
EP1901692 B1	20151130	LSLE	-PG25	LAPSED IN A CONTRACTING STATE ANNOUNCED VIA POSTGRANT INFORM. FROM NAT. OFFICE TO EPO	COUNTRY OF REF DOCUMENT : SI NOTIFICATIONOFLAPSE : LAPSE BECAUSE OF FAILURE TO SUBMIT A TRANSLATION OF THE DESCRIPTION OR TO PAY THE FEE WITHIN THE PRESCRIBED TIME-LIMIT LAPSED DATE : 20140827

EP1901692 B1	20160229	LSLE	-PG25	LAPSED IN A CONTRACTING STATE ANNOUNCED VIA POSTGRANT INFORM. FROM NAT. OFFICE TO EPO	COUNTRY OF REF DOCUMENT : MC NOTIFICATIONOFLAPSE : LAPSE BECAUSE OF FAILURE TO SUBMIT A TRANSLATION OF THE DESCRIPTION OR TO PAY THE FEE WITHIN THE PRESCRIBED TIME-LIMIT LAPSED DATE : 20140827
EP1901692 B1	20160229	LSLE	REG	REFERENCE TO A NATIONAL CODE	REF COUNTRY CODE : CH REF LEGAL EVENT CODE : PL
EP1901692 B1	20160331	LSLE	-PG25	LAPSED IN A CONTRACTING STATE ANNOUNCED VIA POSTGRANT INFORM. FROM NAT. OFFICE TO EPO	COUNTRY OF REF DOCUMENT : LU NOTIFICATIONOFLAPSE : LAPSE BECAUSE OF FAILURE TO SUBMIT A TRANSLATION OF THE DESCRIPTION OR TO PAY THE FEE WITHIN THE PRESCRIBED TIME-LIMIT LAPSED DATE : 20150713
EP1901692 B1	20160420	LSLE	REG	REFERENCE TO A NATIONAL CODE	REF COUNTRY CODE : IE REF LEGAL EVENT CODE : MM4A
EP1901692 B1	20160429	LSLE	-PG25	LAPSED IN A CONTRACTING STATE ANNOUNCED VIA POSTGRANT INFORM. FROM NAT. OFFICE TO EPO	COUNTRY OF REF DOCUMENT : LI NOTIFICATIONOFLAPSE : LAPSE BECAUSE OF NON-PAYMENT OF DUE FEES LAPSED DATE : 20150731
EP1901692 B1	20160429	LSLE	-PG25	LAPSED IN A CONTRACTING STATE ANNOUNCED VIA POSTGRANT INFORM. FROM NAT. OFFICE TO EPO	COUNTRY OF REF DOCUMENT : CH NOTIFICATIONOFLAPSE : LAPSE BECAUSE OF NON-PAYMENT OF DUE FEES LAPSED DATE : 20150731
EP1901692 B1	20160722	LSFE	REG	REFERENCE TO A NATIONAL CODE	COUNTRY OF REF DOCUMENT : FR REF COUNTRY CODE : FR REF LEGAL EVENT CODE : PLFP YEAR OF FEE PAYMENT : 12
EP1901692 B1	20160729	LSLE	-PG25	LAPSED IN A CONTRACTING STATE ANNOUNCED VIA POSTGRANT INFORM. FROM NAT. OFFICE TO EPO	COUNTRY OF REF DOCUMENT : BE NOTIFICATIONOFLAPSE : LAPSE BECAUSE OF FAILURE TO SUBMIT A TRANSLATION OF THE DESCRIPTION OR TO PAY THE FEE WITHIN THE PRESCRIBED TIME-LIMIT LAPSED DATE : 20140827
EP1901692 B1	20160729	LSLE	-PG25	LAPSED IN A CONTRACTING STATE ANNOUNCED VIA POSTGRANT INFORM. FROM NAT. OFFICE TO EPO	COUNTRY OF REF DOCUMENT : IE NOTIFICATIONOFLAPSE : LAPSE BECAUSE OF NON-PAYMENT OF DUE FEES LAPSED DATE : 20150713
EP1901692 B1	20170531	LSLE	-PG25	LAPSED IN A CONTRACTING STATE ANNOUNCED VIA POSTGRANT INFORM. FROM NAT. OFFICE TO EPO	COUNTRY OF REF DOCUMENT : HU NOTIFICATIONOFLAPSE : LAPSE BECAUSE OF FAILURE TO SUBMIT A TRANSLATION OF THE DESCRIPTION OR TO PAY THE FEE WITHIN THE PRESCRIBED TIME-LIMIT; INVALID AB INITIO LAPSED DATE : 20050713
EP1901692 B1	20170707	LSFE	REG	REFERENCE TO A NATIONAL CODE	REF COUNTRY CODE : FR REF LEGAL EVENT CODE : PLFP YEAR OF FEE PAYMENT : 13
EP1901692 B1	20170831	LSLE	-PG25	LAPSED IN A CONTRACTING STATE ANNOUNCED VIA POSTGRANT INFORM. FROM NAT. OFFICE TO EPO	COUNTRY OF REF DOCUMENT : TR NOTIFICATIONOFLAPSE : LAPSE BECAUSE OF FAILURE TO SUBMIT A TRANSLATION OF THE DESCRIPTION OR TO PAY THE FEE WITHIN THE PRESCRIBED TIME-LIMIT LAPSED DATE : 20140827
EP1901692 B1	20170831	LSFE	+PGFP	POSTGRANT: ANNUAL FEES PAID TO NATIONAL OFFICE	COUNTRY OF REF DOCUMENT : PL PAYMENT DATE : 20170612 YEAR OF FEE PAYMENT : 13
EP1901692 B1	20171031	LSFE	+PGFP	POSTGRANT: ANNUAL FEES PAID TO NATIONAL OFFICE	COUNTRY OF REF DOCUMENT : DE PAYMENT DATE : 20170711 YEAR OF FEE PAYMENT : 13
EP1901692 B1	20171031	LSFE	+PGFP	POSTGRANT: ANNUAL FEES PAID TO NATIONAL	COUNTRY OF REF DOCUMENT : GB PAYMENT DATE : 20170711 YEAR OF FEE PAYMENT : 13

				OFFICE	
EP1901692 B1	20171031	LSFE	+PGFP	POSTGRANT: ANNUAL FEES PAID TO NATIONAL OFFICE	COUNTRY OF REF DOCUMENT : FR PAYMENT DATE : 20170707 YEAR OF FEE PAYMENT : 13
EP1901692 B1	20250713	PEXP		Calculated Patent Term Expiry	
IN10149DN2007 A	20080620	LSPB	+	published / reissued	
JP2009501053 T2	20090115	LSPB	+	published / reissued	
JP2009501053 T2	20100825	LSES	-A131	NOTIFICATION OF REASONS FOR REFUSAL	TEXT : JAPANESE INTERMEDIATE CODE: A131 EFFECTIVE DATE : 20100824
JP2009501053 T2	20101117	LSRE	A521	WRITTEN AMENDMENT	TEXT : JAPANESE INTERMEDIATE CODE: A523 EFFECTIVE DATE : 20101116
JP2009501053 T2	20110525	LSRV	-A02	DECISION OF REFUSAL	TEXT : JAPANESE INTERMEDIATE CODE: A02 EFFECTIVE DATE : 20110524
JP2009501053 T2	20110903	LSRE	A521	WRITTEN AMENDMENT	TEXT : JAPANESE INTERMEDIATE CODE: A523 EFFECTIVE DATE : 20110902
JP2009501053 T2	20110915	LSAL	A911	TRANSFER OF RECONSIDERATION BY EXAMINER BEFORE APPEAL (ZENCHI)	TEXT : JAPANESE INTERMEDIATE CODE: A911 EFFECTIVE DATE : 20110914
JP2009501053 T2	20111221	LSES	-A131	NOTIFICATION OF REASONS FOR REFUSAL	TEXT : JAPANESE INTERMEDIATE CODE: A131 EFFECTIVE DATE : 20111220
JP2009501053 T2	20120121	LSRE	A521	WRITTEN AMENDMENT	TEXT : JAPANESE INTERMEDIATE CODE: A523 EFFECTIVE DATE : 20120120
JP2009501053 T2	20120209	LSGT	+TRDD	DECISION OF GRANT OR REJECTION WRITTEN	
JP2009501053 T2	20120215	LSGT	+A01	WRITTEN DECISION TO GRANT A PATENT OR TO GRANT A REGISTRATION (UTILITY MODEL)	TEXT : JAPANESE INTERMEDIATE CODE: A01 EFFECTIVE DATE : 20120214
JP2009501053 T2	20120216	LSGT	+A01	WRITTEN DECISION TO GRANT A PATENT OR TO GRANT A REGISTRATION (UTILITY MODEL)	TEXT : JAPANESE INTERMEDIATE CODE: A01
JP2009501053 T2	20120322	LSFE	+A61	FIRST PAYMENT OF ANNUAL FEES (DURING GRANT PROCEDURE)	TEXT : JAPANESE INTERMEDIATE CODE: A61 EFFECTIVE DATE : 20120314
JP2009501053 T2	20120323	LSGT	+R150	CERTIFICATE OF PATENT OR REGISTRATION OF UTILITY MODEL	TEXT : JAPANESE INTERMEDIATE CODE: R150
JP2009501053 T2	20120326	LSFE	+FPAY	RENEWAL FEE PAYMENT (EVENT DATE IS RENEWAL DATE OF DATABASE)	YEAR OF FEE PAYMENT : 3
JP4954998 B2	20120620	LSGT	+	granted / extensions (spc, cpc, pte)	
JP4954998 B2	20120319	LSFE	R100	特許料納付書 Patent fee payment form	
JP4954998 B2	20150326	LSFE	R20	特許料納付書 Patent fee payment form	
JP4954998 B2	20150331	LSFE	+R250	RECEIPT OF ANNUAL FEES	TEXT : JAPANESE INTERMEDIATE CODE: R250
JP4954998 B2	20160324	LSFE	R20	特許料納付書 Patent	

				fee payment form	
JP4954998 B2	20160329	LSFE	+R250	RECEIPT OF ANNUAL FEES	TEXT : JAPANESE INTERMEDIATE CODE: R250
JP4954998 B2	20170328	LSFE	+R250	RECEIPT OF ANNUAL FEES	TEXT : JAPANESE INTERMEDIATE CODE: R250
JP4954998 B2	20250713	PEXP		Calculated Patent Term Expiry	
MX2007015833 A1	20080409	LSPB	+	published / reissued	
MX2007015833 A1	20091113	LSGT	+FG	GRANT OR REGISTRATION	
RU2008105414 A	20090820	LSPB	+	published / reissued	
RU2379015 C2	20100120	LSGT	+	granted / extensions (spc, cpc, pte)	
RU2379015 C2	20250713	PEXP		Calculated Patent Term Expiry	
SA2316 B1	20091115	LSGT	+	granted / extensions (spc, cpc, pte)	
TNSN08008 A1	20090714	LSPB	+	published / reissued	
US2008103468 AA	20080501	LSPB	+	published / reissued	
US2008103468 AA	20071228	LSAS	AS	ASSIGNMENT	PARTYTYPE : OWNER OWNER : SCA HYGIENE PRODUCTS AB, SWEDEN OLDPARTY : ASSIGNMENT OF ASSIGNORS INTEREST; ASSIGNORS:ELFSBERG, CAMILLA; WALLSTROM, LEIF; REEL/FRAME:020297/0707 EFFECTIVE DATE : 20071221
US7825291 BB	20101102	LSGT	+	granted / extensions (spc, cpc, pte)	
US7825291 BB	20101013	LSGT	PAT1	Patented Case	
US7825291 BB	20140402	LSFE	+FPAY	FEE PAYMENT	YEAR OF FEE PAYMENT : 4
US7825291 BB	20280229	PEXP		Calculated Patent Term Expiry (PTA 63 days)	
WO07008125 A1	20070118	LSPB	+	published / reissued	
WO07008125 A1	20071128	LSNP	ENP	ENTRY INTO THE NATIONAL PHASE IN:	REF DOCUMENT NUMBER : 2008521348 COUNTRY OF REF DOCUMENT : JP KIND CODE OF REF DOCUMENT : A DESIGNATED STATE(S) :
WO07008125 A1	20071206	LSNP	ENP	ENTRY INTO THE NATIONAL PHASE IN:	REF DOCUMENT NUMBER : 2611329 COUNTRY OF REF DOCUMENT : CA
WO07008125 A1	20071207	LSNP	+WWE	WIPO INFORMATION: ENTRY INTO NATIONAL PHASE	REF DOCUMENT NUMBER : 2005758028 COUNTRY OF REF DOCUMENT : EP
WO07008125 A1	20071213	LSNP	+WWE	WIPO INFORMATION: ENTRY INTO NATIONAL PHASE	REF DOCUMENT NUMBER : MX/A/2007/015833 COUNTRY OF REF DOCUMENT : MX
WO07008125 A1	20071221	LSNP	+WWE	WIPO INFORMATION: ENTRY INTO NATIONAL PHASE	REF DOCUMENT NUMBER : 2005334268 COUNTRY OF REF DOCUMENT : AU
WO07008125 A1	20071228	LSNP	+WWE	WIPO INFORMATION: ENTRY INTO NATIONAL PHASE	REF DOCUMENT NUMBER : 11965898 COUNTRY OF REF DOCUMENT : US
WO07008125 A1	20080115	LSNE	NENP	NON-ENTRY INTO THE NATIONAL PHASE IN:	REF COUNTRY CODE : DE
WO07008125 A1	20080131	LSNP	ENP	ENTRY INTO THE	REF DOCUMENT NUMBER :

				NATIONAL PHASE IN:	2005334268 COUNTRY OF REF DOCUMENT : AU DATE OF REF DOCUMENT : 20050713 KIND CODE OF REF DOCUMENT : A DESIGNATED STATE(S) :
WO07008125 A1	20080131	LSPB	+WWP	WIPO INFORMATION: PUBLISHED IN NATIONAL OFFICE	REF DOCUMENT NUMBER : 2005334268 COUNTRY OF REF DOCUMENT : AU
WO07008125 A1	20080213	LSNP	+WWE	WIPO INFORMATION: ENTRY INTO NATIONAL PHASE	REF DOCUMENT NUMBER : 2008105414 COUNTRY OF REF DOCUMENT : RU
WO07008125 A1	20090512	LSNP	ENP	ENTRY INTO THE NATIONAL PHASE IN:	REF DOCUMENT NUMBER : PI0520435 COUNTRY OF REF DOCUMENT : BR KIND CODE OF REF DOCUMENT : A2 DESIGNATED STATE(S) :

17) Family number: 34588011 (US2011178491A) © PatBase

Title: ABSORBENT ARTICLE

Abstract: Source: US2011178491A An absorbent article, especially an incontinence pad, having a length and a width extension, the length being greater than the width, and having absorbent core material, wherein the outer longitudinal edges of the absorbent material form three convex lobes (2, 3, 4), wherein a pair of folding lines (5) extend between the longitudinal ends of the middle one (3) of the three lobes (2, 3, 4), so as to divide the absorbent core material into a central portion (6) and a pair of longitudinal side portions (7), such that, when the article (1) is in use, the folding lines (5) are generally positioned so as to extend along the crotch area of the user, starting from the gracilis tendons and ending in the region of the perineum, whereby the side portions (7) may extend from the central portion (6) towards the user so as to form an arc shape as seen in a transversal direction of the article (1).

Classifications:
International (IPC 8-9): A61F13/15 A61F13/47 A61F13/475 A61F13/53 (Advanced/Invention); A61F13/15 (Core/Invention)
International (IPC 1-7): A61F13/15
CPC: A61B5/0809 A61B5/145 A61B5/4818 A61F13/535 A61F13/4704 A61F13/47236
European: A61F13/15B3G A61F13/15E1 A61F13/472C A61F13/47B A61F13/535
US: 604/380 604/385.04 604/385.101 604/385.101P 604/385.201

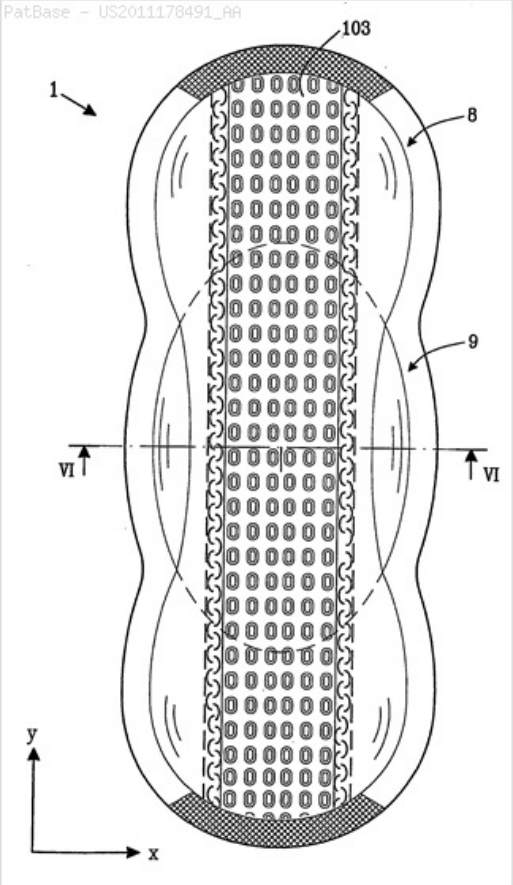

Family:

Publication number	Publication date	Application number	Application date
AT544435 E	20120215	AT20050822000T	20051215
AU2005339192 AA	20070621	AU20050339192	20051215
BRPI0520750 A2	20090526	BR2005PI20750	20051215
BRPI0520750 B1	20160105	BR2005PI20750	20051215
CA2629200 AA	20080508	CA20052629200	20051215
CN101374484 A	20090225	CN200580052217	20051215
CN101374484 B	20110525	CN200580052217	20051215
DE602005032621 D1	20120412	DE200560032621T	20051215
EP1959892 A1	20080827	EP20050822000	20051215
EP1959892 A4	20100602	EP20050822000	20051215
EP1959892 B1	20120208	EP20050822000	20051215
IN04107DN2008 A	20081226	IN2008DN04107	20080514
JP2009519096 T2	20090514	JP20080545528T	20051215
RU2008128829 A	20100120	RU20080128829	20051215
RU2387426 C2	20100427	RU20080128829	20051215
US2011178491 AA	20110721	US20050086612	20051215
US8764718 BB	20140701	US20050086612	20051215
WO07069957 A1	20070621	WO2005SE01947	20051215

Priority:

EP20050822000 20051215 RU20080128829 20051215 WO2007SE01947 20071215 WO2005SE01947 20051215

Probable Assignee: SCA HYGIENE PRODUCTS AB

Assignee(s): (std): BOISSIER ELISABETH ; HAERSJOE MARIA ; HAKANSSON CARIN ; HARSJOE MARIA ; HERMANSSON KENT ; SCA HYGIENE PRODUCTS AB ; KLINTE ANNA ; SCA HYGIENE PROD AB ; HJALMARSSON LENNART ; SCA HYGIENE PRODUCT AB ; SGA HYGIENE PRODUCTS AB ; OLSSON ANNA KLINTE

Assignee(s):	SKA KHAJDZHIN PRODAKTS AB
Inventor(s): (std):	HAKANSSON CARIN ; HARSJO MARIA ; HARSJOE MARIA ; HERMANSSON KENT ; HJALMARSSON LENNART ; KH JALMARSSON LENNART ; KHERMANSSON KENT ; KHERSHE MARIJA ; KHOKANSSON KARIN ; KLINTE ANNA ; MARIA HARSJOE ; OLSSON ANNA KLINTE ; BOISSIER ELISABETH ; BUASS E EHLIZABET ; KLINTE A ; HJALMARSSON L ; HERMANSSON K ; HARSJOE M ; HAKANSSON C ; HAERSJOE MARIA ; HAAKANSSON CARIN ; BOISSIER E ; KENT HERMANSSON ; ELISABETH BOISSIER ; CARIN HAKANSSON ; ANNA KLINTE
Inventor(s):	A KLINTE ; MHARSJOE ; LHJALMARSSON ; KHERMANSSON ; EBOISSIER ; CHAKANSSON ; AKLINTE ; MARIA HARSJO ; LENNART HJALMARSSON ; E BOISSIER ; C HAKANSSON ; K HERMANSSON ; BUASS'E EHLIZABET ; M HARSJOE ; L HJALMARSSON ; KH'JALMARSSON LENNART
Agent(s):	WATERMARK PATENT AND TRADE MARKS ATTORNEYS; WATERMARK INTELLECTUAL PROPERTY PTY LTD; FETHERSTONHAUGH AND CO; HOFFMANN EITLE PATENT U RECHTSANWAELTE PARTMBB; VALEA AB; BUCHANAN INGERSOLL AND ROONEY PC
Designated states:	AE AG AL AM AT AU AZ BA BB BE BF BG BJ BR BW BY BZ CA CF CG CH CI CM CN CO CR CU CY CZ DE DK DM DZ EC EE EG ES FI FR GA GB GD GE GH GM GN GQ GR GW HR HU ID IE IL IN IS IT JP KE KG KM KN KP KR KZ LC LI LK LR LS LT LU LV LY MA MC MD MG MK ML MN MR MW MX MZ NA NE NG NI NL NO NZ OM PG PH PL PT RO RU SC SD SE SG SI SK SL SM SN SY SZ TD TG TJ TM TN TR TT TZ UA UG US UZ VC VN YU ZA ZM ZW

Legal status (INPADOC)

View legal status timeline

Patent	Date recorded	Event group	Code	Event	Details
AT544435 E	20120215	LSGT	+	granted / extensions (spc, cpc, pte)	
AT544435 E	20251215	PEXP		Calculated Patent Term Expiry	
AU2005339192 AA	20070621	LSPB	+	published / reissued	
AU2005339192 AA	20101202	LSLE	-MK1	APPLICATION LAPSED SECTION 142(2)(A) - NO REQUEST FOR EXAMINATION IN RELEVANT PERIOD	
BRPI0520750 A2	20151027	LSGT	B09A	DECISION: INTENTION TO GRANT	
BRPI0520750 B1	20160105	LSGT	+B16A	PATENT OR CERTIFICATE OF ADDITION OF INVENTION GRANTED	TEXT : PRAZO DE VALIDADE: 10 (DEZ) ANOS CONTADOS A PARTIR DE 05/01/2016, OBSERVADAS AS CONDICOES LEGAIS.
BRPI0520750 B1	20251215	PEXP		Calculated Patent Term Expiry	
CA2629200 AA	20080508	LSPB	+	published / reissued	
CA2629200 AA	20101215	LSLE	-FZDE	DEAD	
CN101374484 A	20090225	LSPB	+	published / reissued	
CN101374484 A	20090225	LSPB	+C06	PUBLICATION	
CN101374484 B	20110525	LSGT	+	granted / extensions (spc, cpc, pte)	
CN101374484 B	20110525	LSGT	+C14	GRANT OF PATENT OR UTILITY MODEL	
CN101374484 B	20251215	PEXP		Calculated Patent Term Expiry	
EP1959892 A1	20080827	LSPB	+	published / reissued	
EP1959892 A1	20080827	LSES	+17P	REQUEST FOR EXAMINATION FILED	EFFECTIVE DATE : 20080326
EP1959892 A1	20170131	LSFE	+PGFP	POSTGRANT: ANNUAL FEES PAID TO NATIONAL OFFICE	COUNTRY OF REF DOCUMENT : DE PAYMENT DATE : 20161213 YEAR OF FEE PAYMENT : 12
EP1959892 A4	20100602	LSES	+A4	DESPATCH OF SUPPLEMENTARY SEARCH REPORT	EFFECTIVE DATE : 20100504
EP1959892 A4	20110727	LSRE	RIC1	CLASSIFICATION (CORRECTION)	CLASSIFICATIONSCHEME : IPC CLASSIFICATIONSYMBOL : A61F 13/15 20060101AFI20110621BHEP
EP1959892 A4	20110727	LSRE	RIC1	CLASSIFICATION	CLASSIFICATIONSCHEME : IPC

				(CORRECTION)	CLASSIFICATIONSYMBOL : A61F 13/475 20060101ALI20110621BHEP
EP1959892 B1	20120208	LSGT	+	granted / extensions (spc, cpc, pte)	
EP1959892 B1	20120208	LSGT	REG	REFERENCE TO A NATIONAL CODE	REF COUNTRY CODE : GB REF LEGAL EVENT CODE : FG4D
EP1959892 B1	20120215	LSNP	REG	REFERENCE TO A NATIONAL CODE	REF COUNTRY CODE : CH REF LEGAL EVENT CODE : EP
EP1959892 B1	20120215	LSNP	REG	REFERENCE TO A NATIONAL CODE	REF COUNTRY CODE : AT REF LEGAL EVENT CODE : REF REF DOCUMENT NUMBER : 544435 COUNTRY OF REF DOCUMENT : AT KIND CODE OF REF DOCUMENT : T DESIGNATED STATE(S) : EFFECTIVE DATE : 20120215
EP1959892 B1	20120412	LSPB	REG	REFERENCE TO A NATIONAL CODE	REF COUNTRY CODE : DE REF LEGAL EVENT CODE : R096 REF DOCUMENT NUMBER : 602005032621 COUNTRY OF REF DOCUMENT : DE EFFECTIVE DATE : 20120412
EP1959892 B1	20120606	LSRV	REG	REFERENCE TO A NATIONAL CODE	REF COUNTRY CODE : NL REF LEGAL EVENT CODE : VDEP EFFECTIVE DATE : 20120208
EP1959892 B1	20120725	LSRV	-LTIE	LT: INVALIDATION OF EUROPEAN PATENT OR PATENT EXTENSION	REF COUNTRY CODE : EP EFFECTIVE DATE : 20120208
EP1959892 B1	20120731	LSLE	-PG25	LAPSED IN A CONTRACTING STATE ANNOUNCED VIA POSTGRANT INFORM. FROM NAT. OFFICE TO EPO	COUNTRY OF REF DOCUMENT : IS NOTIFICATIONOFLAPSE : LAPSE BECAUSE OF FAILURE TO SUBMIT A TRANSLATION OF THE DESCRIPTION OR TO PAY THE FEE WITHIN THE PRESCRIBED TIME-LIMIT LAPSED DATE : 20120608
EP1959892 B1	20120731	LSLE	-PG25	LAPSED IN A CONTRACTING STATE ANNOUNCED VIA POSTGRANT INFORM. FROM NAT. OFFICE TO EPO	COUNTRY OF REF DOCUMENT : NL NOTIFICATIONOFLAPSE : LAPSE BECAUSE OF FAILURE TO SUBMIT A TRANSLATION OF THE DESCRIPTION OR TO PAY THE FEE WITHIN THE PRESCRIBED TIME-LIMIT LAPSED DATE : 20120208
EP1959892 B1	20120731	LSLE	-PG25	LAPSED IN A CONTRACTING STATE ANNOUNCED VIA POSTGRANT INFORM. FROM NAT. OFFICE TO EPO	COUNTRY OF REF DOCUMENT : LT NOTIFICATIONOFLAPSE : LAPSE BECAUSE OF FAILURE TO SUBMIT A TRANSLATION OF THE DESCRIPTION OR TO PAY THE FEE WITHIN THE PRESCRIBED TIME-LIMIT LAPSED DATE : 20120208
EP1959892 B1	20120831	LSLE	-PG25	LAPSED IN A CONTRACTING STATE ANNOUNCED VIA POSTGRANT INFORM. FROM NAT. OFFICE TO EPO	COUNTRY OF REF DOCUMENT : BE NOTIFICATIONOFLAPSE : LAPSE BECAUSE OF FAILURE TO SUBMIT A TRANSLATION OF THE DESCRIPTION OR TO PAY THE FEE WITHIN THE PRESCRIBED TIME-LIMIT LAPSED DATE : 20120208
EP1959892 B1	20120831	LSLE	-PG25	LAPSED IN A CONTRACTING STATE ANNOUNCED VIA POSTGRANT INFORM. FROM NAT. OFFICE TO EPO	COUNTRY OF REF DOCUMENT : FI NOTIFICATIONOFLAPSE : LAPSE BECAUSE OF FAILURE TO SUBMIT A TRANSLATION OF THE DESCRIPTION OR TO PAY THE FEE WITHIN THE PRESCRIBED TIME-LIMIT LAPSED DATE : 20120208
EP1959892 B1	20120831	LSLE	-PG25	LAPSED IN A CONTRACTING STATE ANNOUNCED VIA POSTGRANT INFORM. FROM NAT. OFFICE TO EPO	COUNTRY OF REF DOCUMENT : GR NOTIFICATIONOFLAPSE : LAPSE BECAUSE OF FAILURE TO SUBMIT A TRANSLATION OF THE DESCRIPTION OR TO PAY THE FEE WITHIN THE PRESCRIBED TIME-LIMIT LAPSED DATE : 20120509
EP1959892 B1	20120831	LSLE	-PG25	LAPSED IN A CONTRACTING STATE ANNOUNCED VIA POSTGRANT INFORM. FROM NAT.	COUNTRY OF REF DOCUMENT : PT NOTIFICATIONOFLAPSE : LAPSE BECAUSE OF FAILURE TO SUBMIT A TRANSLATION OF THE DESCRIPTION OR TO PAY THE FEE WITHIN THE

				OFFICE TO EPO	PRESCRIBED TIME-LIMIT LAPSED DATE : 20120608
EP1959892 B1	20120831	LSLE	-PG25	LAPSED IN A CONTRACTING STATE ANNOUNCED VIA POSTGRANT INFORM. FROM NAT. OFFICE TO EPO	COUNTRY OF REF DOCUMENT : LV NOTIFICATIONOFLAPSE : LAPSE BECAUSE OF FAILURE TO SUBMIT A TRANSLATION OF THE DESCRIPTION OR TO PAY THE FEE WITHIN THE PRESCRIBED TIME-LIMIT LAPSED DATE : 20120208
EP1959892 B1	20120831	LSLE	-PG25	LAPSED IN A CONTRACTING STATE ANNOUNCED VIA POSTGRANT INFORM. FROM NAT. OFFICE TO EPO	COUNTRY OF REF DOCUMENT : PL NOTIFICATIONOFLAPSE : LAPSE BECAUSE OF FAILURE TO SUBMIT A TRANSLATION OF THE DESCRIPTION OR TO PAY THE FEE WITHIN THE PRESCRIBED TIME-LIMIT LAPSED DATE : 20120208
EP1959892 B1	20120915	LSRV	REG	REFERENCE TO A NATIONAL CODE	REF COUNTRY CODE : AT REF LEGAL EVENT CODE : MK05 REF DOCUMENT NUMBER : 544435 COUNTRY OF REF DOCUMENT : AT KIND CODE OF REF DOCUMENT : T DESIGNATED STATE(S) : EFFECTIVE DATE : 20120208
EP1959892 B1	20120928	LSLE	-PG25	LAPSED IN A CONTRACTING STATE ANNOUNCED VIA POSTGRANT INFORM. FROM NAT. OFFICE TO EPO	COUNTRY OF REF DOCUMENT : CY NOTIFICATIONOFLAPSE : LAPSE BECAUSE OF FAILURE TO SUBMIT A TRANSLATION OF THE DESCRIPTION OR TO PAY THE FEE WITHIN THE PRESCRIBED TIME-LIMIT LAPSED DATE : 20120208
EP1959892 B1	20121031	LSLE	-PG25	LAPSED IN A CONTRACTING STATE ANNOUNCED VIA POSTGRANT INFORM. FROM NAT. OFFICE TO EPO	COUNTRY OF REF DOCUMENT : CZ NOTIFICATIONOFLAPSE : LAPSE BECAUSE OF FAILURE TO SUBMIT A TRANSLATION OF THE DESCRIPTION OR TO PAY THE FEE WITHIN THE PRESCRIBED TIME-LIMIT LAPSED DATE : 20120208
EP1959892 B1	20121031	LSLE	-PG25	LAPSED IN A CONTRACTING STATE ANNOUNCED VIA POSTGRANT INFORM. FROM NAT. OFFICE TO EPO	COUNTRY OF REF DOCUMENT : RO NOTIFICATIONOFLAPSE : LAPSE BECAUSE OF FAILURE TO SUBMIT A TRANSLATION OF THE DESCRIPTION OR TO PAY THE FEE WITHIN THE PRESCRIBED TIME-LIMIT LAPSED DATE : 20120208
EP1959892 B1	20121031	LSLE	-PG25	LAPSED IN A CONTRACTING STATE ANNOUNCED VIA POSTGRANT INFORM. FROM NAT. OFFICE TO EPO	COUNTRY OF REF DOCUMENT : SI NOTIFICATIONOFLAPSE : LAPSE BECAUSE OF FAILURE TO SUBMIT A TRANSLATION OF THE DESCRIPTION OR TO PAY THE FEE WITHIN THE PRESCRIBED TIME-LIMIT LAPSED DATE : 20120208
EP1959892 B1	20121031	LSLE	-PG25	LAPSED IN A CONTRACTING STATE ANNOUNCED VIA POSTGRANT INFORM. FROM NAT. OFFICE TO EPO	COUNTRY OF REF DOCUMENT : SE NOTIFICATIONOFLAPSE : LAPSE BECAUSE OF FAILURE TO SUBMIT A TRANSLATION OF THE DESCRIPTION OR TO PAY THE FEE WITHIN THE PRESCRIBED TIME-LIMIT LAPSED DATE : 20120208
EP1959892 B1	20121031	LSLE	-PG25	LAPSED IN A CONTRACTING STATE ANNOUNCED VIA POSTGRANT INFORM. FROM NAT. OFFICE TO EPO	COUNTRY OF REF DOCUMENT : EE NOTIFICATIONOFLAPSE : LAPSE BECAUSE OF FAILURE TO SUBMIT A TRANSLATION OF THE DESCRIPTION OR TO PAY THE FEE WITHIN THE PRESCRIBED TIME-LIMIT LAPSED DATE : 20120208
EP1959892 B1	20121031	LSLE	-PG25	LAPSED IN A CONTRACTING STATE ANNOUNCED VIA POSTGRANT INFORM. FROM NAT. OFFICE TO EPO	COUNTRY OF REF DOCUMENT : DK NOTIFICATIONOFLAPSE : LAPSE BECAUSE OF FAILURE TO SUBMIT A TRANSLATION OF THE DESCRIPTION OR TO PAY THE FEE WITHIN THE PRESCRIBED TIME-LIMIT LAPSED DATE : 20120208
EP1959892 B1	20121130	LSLE	-PG25	LAPSED IN A CONTRACTING STATE ANNOUNCED VIA POSTGRANT INFORM. FROM NAT. OFFICE TO EPO	COUNTRY OF REF DOCUMENT : SK NOTIFICATIONOFLAPSE : LAPSE BECAUSE OF FAILURE TO SUBMIT A TRANSLATION OF THE DESCRIPTION OR TO PAY THE FEE WITHIN THE PRESCRIBED TIME-LIMIT LAPSED DATE : 20120208

EP1959892 B1	20121130	LSLE	-PG25	LAPSED IN A CONTRACTING STATE ANNOUNCED VIA POSTGRANT INFORM. FROM NAT. OFFICE TO EPO	COUNTRY OF REF DOCUMENT : IT NOTIFICATIONOFLAPSE : LAPSE BECAUSE OF FAILURE TO SUBMIT A TRANSLATION OF THE DESCRIPTION OR TO PAY THE FEE WITHIN THE PRESCRIBED TIME-LIMIT LAPSED DATE : 20120208
EP1959892 B1	20130116	LSGT	+26N	NO OPPOSITION FILED	EFFECTIVE DATE : 20121109
EP1959892 B1	20130131	LSLE	-PG25	LAPSED IN A CONTRACTING STATE ANNOUNCED VIA POSTGRANT INFORM. FROM NAT. OFFICE TO EPO	COUNTRY OF REF DOCUMENT : AT NOTIFICATIONOFLAPSE : LAPSE BECAUSE OF FAILURE TO SUBMIT A TRANSLATION OF THE DESCRIPTION OR TO PAY THE FEE WITHIN THE PRESCRIBED TIME-LIMIT LAPSED DATE : 20120208
EP1959892 B1	20130307	LSRE	REG	REFERENCE TO A NATIONAL CODE	REF COUNTRY CODE : DE REF LEGAL EVENT CODE : R097 REF DOCUMENT NUMBER : 602005032621 COUNTRY OF REF DOCUMENT : DE EFFECTIVE DATE : 20121109
EP1959892 B1	20130430	LSLE	-PG25	LAPSED IN A CONTRACTING STATE ANNOUNCED VIA POSTGRANT INFORM. FROM NAT. OFFICE TO EPO	COUNTRY OF REF DOCUMENT : ES NOTIFICATIONOFLAPSE : LAPSE BECAUSE OF FAILURE TO SUBMIT A TRANSLATION OF THE DESCRIPTION OR TO PAY THE FEE WITHIN THE PRESCRIBED TIME-LIMIT LAPSED DATE : 20120519
EP1959892 B1	20130731	LSLE	-PG25	LAPSED IN A CONTRACTING STATE ANNOUNCED VIA POSTGRANT INFORM. FROM NAT. OFFICE TO EPO	COUNTRY OF REF DOCUMENT : MC NOTIFICATIONOFLAPSE : LAPSE BECAUSE OF NON-PAYMENT OF DUE FEES LAPSED DATE : 20121231
EP1959892 B1	20130731	LSLE	-PG25	LAPSED IN A CONTRACTING STATE ANNOUNCED VIA POSTGRANT INFORM. FROM NAT. OFFICE TO EPO	COUNTRY OF REF DOCUMENT : BG NOTIFICATIONOFLAPSE : LAPSE BECAUSE OF FAILURE TO SUBMIT A TRANSLATION OF THE DESCRIPTION OR TO PAY THE FEE WITHIN THE PRESCRIBED TIME-LIMIT LAPSED DATE : 20120508
EP1959892 B1	20130731	LSLE	REG	REFERENCE TO A NATIONAL CODE	REF COUNTRY CODE : CH REF LEGAL EVENT CODE : PL
EP1959892 B1	20130925	LSLE	REG	REFERENCE TO A NATIONAL CODE	REF COUNTRY CODE : IE REF LEGAL EVENT CODE : MM4A
EP1959892 B1	20130927	LSLE	REG	REFERENCE TO A NATIONAL CODE	REF COUNTRY CODE : FR REF LEGAL EVENT CODE : ST EFFECTIVE DATE : 20130830
EP1959892 B1	20131031	LSLE	-PG25	LAPSED IN A CONTRACTING STATE ANNOUNCED VIA POSTGRANT INFORM. FROM NAT. OFFICE TO EPO	COUNTRY OF REF DOCUMENT : LI NOTIFICATIONOFLAPSE : LAPSE BECAUSE OF NON-PAYMENT OF DUE FEES LAPSED DATE : 20121231
EP1959892 B1	20131031	LSLE	-PG25	LAPSED IN A CONTRACTING STATE ANNOUNCED VIA POSTGRANT INFORM. FROM NAT. OFFICE TO EPO	COUNTRY OF REF DOCUMENT : CH NOTIFICATIONOFLAPSE : LAPSE BECAUSE OF NON-PAYMENT OF DUE FEES LAPSED DATE : 20121231
EP1959892 B1	20131031	LSLE	-PG25	LAPSED IN A CONTRACTING STATE ANNOUNCED VIA POSTGRANT INFORM. FROM NAT. OFFICE TO EPO	COUNTRY OF REF DOCUMENT : IE NOTIFICATIONOFLAPSE : LAPSE BECAUSE OF NON-PAYMENT OF DUE FEES LAPSED DATE : 20121215
EP1959892 B1	20131129	LSLE	-PG25	LAPSED IN A CONTRACTING STATE ANNOUNCED VIA POSTGRANT INFORM. FROM NAT. OFFICE TO EPO	COUNTRY OF REF DOCUMENT : FR NOTIFICATIONOFLAPSE : LAPSE BECAUSE OF NON-PAYMENT OF DUE FEES LAPSED DATE : 20130102
EP1959892 B1	20140430	LSLE	-PG25	LAPSED IN A CONTRACTING STATE ANNOUNCED VIA POSTGRANT INFORM. FROM NAT.	COUNTRY OF REF DOCUMENT : TR NOTIFICATIONOFLAPSE : LAPSE BECAUSE OF FAILURE TO SUBMIT A TRANSLATION OF THE DESCRIPTION OR TO PAY THE FEE WITHIN THE

				OFFICE TO EPO	PRESCRIBED TIME-LIMIT LAPSED DATE : 20120208
EP1959892 B1	20140530	LSLE	-PG25	LAPSED IN A CONTRACTING STATE ANNOUNCED VIA POSTGRANT INFORM. FROM NAT. OFFICE TO EPO	COUNTRY OF REF DOCUMENT : LU NOTIFICATIONOFLAPSE : LAPSE BECAUSE OF NON-PAYMENT OF DUE FEES LAPSED DATE : 20121215
EP1959892 B1	20140731	LSLE	-PG25	LAPSED IN A CONTRACTING STATE ANNOUNCED VIA POSTGRANT INFORM. FROM NAT. OFFICE TO EPO	COUNTRY OF REF DOCUMENT : HU NOTIFICATIONOFLAPSE : LAPSE BECAUSE OF FAILURE TO SUBMIT A TRANSLATION OF THE DESCRIPTION OR TO PAY THE FEE WITHIN THE PRESCRIBED TIME-LIMIT LAPSED DATE : 20051215
EP1959892 B1	20170131	LSFE	+PGFP	POSTGRANT: ANNUAL FEES PAID TO NATIONAL OFFICE	COUNTRY OF REF DOCUMENT : GB PAYMENT DATE : 20161214 YEAR OF FEE PAYMENT : 12
EP1959892 B1	20180131	LSFE	+PGFP	POSTGRANT: ANNUAL FEES PAID TO NATIONAL OFFICE	COUNTRY OF REF DOCUMENT : DE PAYMENT DATE : 20171211 YEAR OF FEE PAYMENT : 13
EP1959892 B1	20251215	PEXP		Calculated Patent Term Expiry	
IN04107DN2008 A	20081226	LSPB	+	published / reissued	
JP2009519096 T2	20090514	LSPB	+	published / reissued	
JP2009519096 T2	20101125	LSES	-A131	NOTIFICATION OF REASONS FOR REFUSAL	TEXT : JAPANESE INTERMEDIATE CODE: A131 EFFECTIVE DATE : 20101124
JP2009519096 T2	20110420	LSRV	-A02	DECISION OF REFUSAL	TEXT : JAPANESE INTERMEDIATE CODE: A02 EFFECTIVE DATE : 20110419
RU2008128829 A	20100120	LSPB	+	published / reissued	
RU2387426 C2	20100427	LSGT	+	granted / extensions (spc, cpc, pte)	
RU2387426 C2	20251215	PEXP		Calculated Patent Term Expiry	
US2011178491 AA	20110721	LSPB	+	published / reissued	
US2011178491 AA	20090408	LSAS	AS	ASSIGNMENT	OWNER NAME : SCA HYGIENE PRODUCTS AB, SWEDEN DESCRIPTION : ASSIGNMENT OF ASSIGNORS INTEREST; ASSIGNORS:HAKANSSON, CARIN; OLSSON, ANNA KLINTE; HERMANSSON, KENT; AND OTHERS; REEL/FRAME:022519/0836 EFFECTIVE DATE : 20080701
US8764718 BB	20140701	LSGT	+	granted / extensions (spc, cpc, pte)	
US8764718 BB	20090408	LSAS	AS	ASSIGNMENT	PARTYTYPE : OWNER OWNER : SCA HYGIENE PRODUCTS AB, SWEDEN OLDPARTY : ASSIGNMENT OF ASSIGNORS INTEREST; ASSIGNORS:HAKANSSON, CARIN; OLSSON, ANNA KLINTE; HERMANSSON, KENT; AND OTHERS; REEL/FRAME:022519/0836 EFFECTIVE DATE : 20080701
US8764718 BB	20140611	LSGT	PAT1	Patented Case	
US8764718 BB	20171221	LSFE	+MAFP	MAINTENANCE FEE PAYMENT	YEAR OF FEE PAYMENT : 4
US8764718 BB	20301030	PEXP		Calculated Patent Term Expiry (PTA 1780 days and a terminal disclaimer has been filed)	
WO07069957 A1	20070621	LSPB	+	published / reissued	

WO07069957 A1	20080508	LSNP	ENP	ENTRY INTO THE NATIONAL PHASE IN:	REF DOCUMENT NUMBER : 2629200 COUNTRY OF REF DOCUMENT : CA
WO07069957 A1	20080512	LSNP	+WWE	WIPO INFORMATION: ENTRY INTO NATIONAL PHASE	REF DOCUMENT NUMBER : MX/A/2008/006154 COUNTRY OF REF DOCUMENT : MX
WO07069957 A1	20080613	LSNP	+WWE	WIPO INFORMATION: ENTRY INTO NATIONAL PHASE	REF DOCUMENT NUMBER : 2008545528 COUNTRY OF REF DOCUMENT : JP
WO07069957 A1	20080613	LSNP	+WWE	WIPO INFORMATION: ENTRY INTO NATIONAL PHASE	REF DOCUMENT NUMBER : 2005339192 COUNTRY OF REF DOCUMENT : AU
WO07069957 A1	20080617	LSNE	NENP	NON-ENTRY INTO THE NATIONAL PHASE IN:	REF COUNTRY CODE : DE
WO07069957 A1	20080710	LSNP	ENP	ENTRY INTO THE NATIONAL PHASE IN:	REF DOCUMENT NUMBER : 2005339192 COUNTRY OF REF DOCUMENT : AU DATE OF REF DOCUMENT : 20051215 KIND CODE OF REF DOCUMENT : A DESIGNATED STATE(S) :
WO07069957 A1	20080715	LSNP	+WWE	WIPO INFORMATION: ENTRY INTO NATIONAL PHASE	REF DOCUMENT NUMBER : 2008128829 COUNTRY OF REF DOCUMENT : RU
WO07069957 A1	20090526	LSNP	ENP	ENTRY INTO THE NATIONAL PHASE IN:	REF DOCUMENT NUMBER : PI0520750 COUNTRY OF REF DOCUMENT : BR KIND CODE OF REF DOCUMENT : A2 DESIGNATED STATE(S) :
WO07069957 A1	20110217	LSNP	+WWE	WIPO INFORMATION: ENTRY INTO NATIONAL PHASE	REF DOCUMENT NUMBER : 12086612 COUNTRY OF REF DOCUMENT : US

18) Family number: 42535236 (US2008294140A) © PatBase

Title: FEMININE HYGIENE ARTICLE WITH PRINTED PATTERN AND EMBOSSED PATTERN

Abstract: Source: US2008294140A A feminine hygiene article such as pantiliner having a topsheet and a backsheet. The article further includes a printed pattern and an embossed pattern. The embossed pattern has at least one embossed decorative element and the printed pattern has a printed decorative element which is substantially similar to the embossed decorative element.

Classifications:
International (IPC 8-9): A61F A61F13/00 A61F13/15 A61F13/20 A61F13/472 A61F13/511 A61F13/513 A61F13/514 A61F13/53 A61F13/539 A61F13/551 A61F13/56 A61F13/84 B32B3/30 (Advanced/Invention); A61F13/15 B32B3/30 (Core/Invention); A61F B32B (Subclass/Invention)
International (IPC 1-7): A61F13/15 B32B3/30
CPC: A61F13/51498 A61F2013/8497 A61F13/5611 A61F13/5616 A61F13/51496 A61F13/84 A61F2013/530036 A61F13/5514 A61F13/513 A61F13/539 A61F2013/5395 A61F13/51104 A61F2013/4708 A61F2013/51377 A61F2013/5149 A61F13/472 A61F13/53
European: A61F13/472 A61F13/511 A61F13/514D A61F13/514E K61F13/47D K61F13/513H K61F13/514C4B K61F13/84G
US: 604/366 604/374 604/380 604/385.01 604/385.010S 604/385.05 604/385.23 604/385.230P

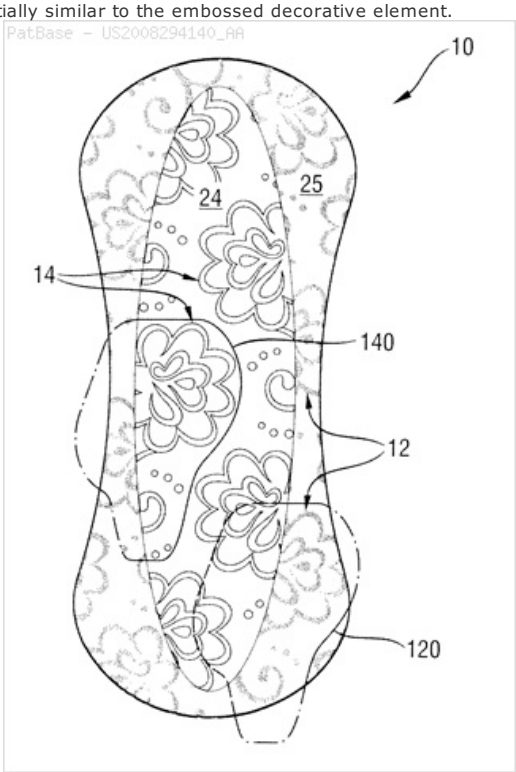

Family:

Publication number	Publication date	Application number	Application date
AR066675 AA	20090902	AR2008P102166	20080522
AT513536 E	20110715	AT20070108949T	20070525
AU2008256307 AA	20081204	AU20080256307	20080523
BRPI0812301 A2	20141125	BR2008PI12301	20080523
CA2688350 AA	20081204	CA20082688350	20080523
CL2008001508 A1	20090220	CL20080001508	20080523
CN101677885 A	20100324	CN200880017417	20080523
CN101677885 B	20130612	CN200880017417	20080523
DE602007015337 D1	20110811	DE200760015337T	20070525
EG25697 A	20120522	EG20090111703	20091122
EP1994917 A1	20081126	EP20070108949	20070525
EP1994917 B1	20110622	EP20070108949	20070525
ES2368352 T3	20111116	ES20070108949T	20070525
IL202294 A0	20100630	IL20080202294	20080523
IN07261DN2009 A	20100625	IN2009DN07261	20091110
IN283793 B	20170602	IN2009DN07261	20091110
JP2010527682 T2	20100819	JP20100508962T	20080523
JP5048126 B2	20121017	JP20100508962T	20080523
KR20100005140 A	20100113	KR20097024405	20080523
MX2009012736 A1	20091210	MX20090012736	20080523
RU2009141776 A	20110710	RU20090141776	20080523
RU2454981 C2	20120710	RU20090141776	20080523
US2008294140 AA	20081127	US20080123705	20080520
US2013338621 AA	20131219	US20130968655	20130816
US2015080824 AA	20150319	US20140549620	20141121
US2016367412 AA	20161222	US20160249941	20160829
US8536401 BB	20130917	US20080123705	20080520
WO08146222 A1	20081204	WO2008IB52046	20080523
ZA200907713 A	20100728	ZA20090007713	20091103

Priority:

EP20070108949 20070525 US20080123705 20080520 US20130968655 20130816
WO2008IB52046 20080523 US20140549620 20141121 US20160249941 20160829

Probable Assignee: PROCTER AND GAMBLE CO

Assignee(s): (std): ECKER CORNELIA ; GAGLIARDI IVANO ; PROCTER AND GAMBLE ; VEGLIO PAOLO

Assignee(s):	THE PROTECTOR AND GAMBLE COMPANY ; PROTECTOR AND GAMBLE CO ; DZE PROKTER EHND GEHMBL KOMPANI ; PROCTER AND GAMBLE CO ; PROCTER AND GAMBLE CO CINCINNATI ; THE PROCTER AND GAMBLE COMPANY
Inventor(s): (std):	CORNELIA ECKER ; ECKER CORNELIA ; GAGLIARDI IVANO ; IVANO GAGLIARDI ; PAOLO VEGLIO ; VEGLIO PAOLO A ; EHKER KORNELIJA ; VEGLIO PAOLO
Inventor(s):	CORNELIA ; ECKER CORNELIA 65824 ; VEGLIO PAOLO A 65129 ; GAGLIARDI IVANO 65123 ; VEGLIO ; PAOLO ; IVANO ; GAGLIARDI ; ECKER
Agent(s):	PHILLIPS ORMONDE FITZPATRICK; LLOVET; LHUILLIER FLORENT CHARLES; KREMER VERONIQUE MARIE JOSEPHINE; NAGAI HIROSHI; THE PROCTER AND GAMBLE COMPANY, GLOBAL LEGAL DEPARTMENT - IP; PROCTER AND GAMBLE CO GLOBAL LEGAL DEPARTMENT IP; AMANDA T; ANDREW J; MEGAN C; THE PROCTER AND GAMBLE COMPANY
Designated states:	AE AG AL AM AO AT AU AZ BA BB BE BF BG BH BJ BR BW BY BZ CA CF CG CH CI CM CN CO CR CU CY CZ DE DK DM DO DZ EC EE EG ES FI FR GA GB GD GE GH GM GN GQ GR GT GW HN HR HU ID IE IL IN IS IT JP KE KG KM KN KP KR KZ LA LC LI LK LR LS LT LU LV LY MA MC MD ME MG MK ML MN MR MT MW MX MY MZ NA NE NG NI NL NO NZ OM PG PH PL PT RO RS RU SC SD SE SG SI SK SL SM SN SV SY SZ TD TG TJ TM TN TR TT TZ UA UG US UZ VC VN ZA ZM ZW

Legal status (INPADOC)

View legal status timeline

Patent	Date recorded	Event group	Code	Event	Details
AR066675 AA	20090902	LSPB	+	published / reissued	
AR066675 AA	20141203	LSWD	-FA	ABANDONMENT OR WITHDRAWAL	
AT513536 E	20110715	LSGT	+	granted / extensions (spc, cpc, pte)	
AT513536 E	20111215	LSLE	-RER	CEASED AS TO PARAGRAPH 5 LIT. 3 LAW INTRODUCING PATENT TREATIES	
AT513536 E	20270525	PEXP		Calculated Patent Term Expiry	
AU2008256307 AA	20081204	LSPB	+	published / reissued	
AU2008256307 AA	20120614	LSLE	-MK1	APPLICATION LAPSED SECTION 142(2)(A) - NO REQUEST FOR EXAMINATION IN RELEVANT PERIOD	
BRPI0812301 A2	20170404	LSFE	-B08F	APPLICATION FEES: DISMISSAL - ARTICLE 86 OF INDUSTRIAL PROPERTY LAW	
BRPI0812301 A2	20170718	LSLE	-B08K	LAPSE AS NO EVIDENCE OF PAYMENT OF THE ANNUAL FEE HAS BEEN FURNISHED TO INPI (ACC. ART. 87)	
CA2688350 AA	20081204	LSPB	+	published / reissued	
CA2688350 AA	20091125	LSES	+EEER	EXAMINATION REQUEST	
CA2688350 AA	20160801	LSLE	-FZDE	DEAD	EFFECTIVE DATE : 20160620
CL2008001508 A1	20090220	LSPB	+	published / reissued	
CN101677885 A	20100324	LSPB	+	published / reissued	
CN101677885 A	20100324	LSPB	+C06	PUBLICATION	
CN101677885 B	20130612	LSGT	+	granted / extensions (spc, cpc, pte)	
CN101677885 B	20130612	LSGT	+C14	GRANT OF PATENT OR UTILITY MODEL	
CN101677885 B	20280523	PEXP		Calculated Patent Term Expiry	
EG25697 A	20120522	LSGT	+	granted /	

				extensions (spc, cpc, pte)	
EG25697 A	20291122	PEXP		Calculated Patent Term Expiry	
EP1994917 A1	20081126	LSPB	+	published / reissued	
EP1994917 A1	20090624	LSES	+17P	REQUEST FOR EXAMINATION FILED	EFFECTIVE DATE : 20090514
EP1994917 A1	20090715	LSES	+17Q	FIRST EXAMINATION REPORT	EFFECTIVE DATE : 20090615
EP1994917 A1	20090729	LSFE	+AKX	PAYMENT OF DESIGNATION FEES	COUNTRY OF REF DOCUMENT : AT COUNTRY OF REF DOCUMENT : BE COUNTRY OF REF DOCUMENT : BG COUNTRY OF REF DOCUMENT : CH COUNTRY OF REF DOCUMENT : CY COUNTRY OF REF DOCUMENT : CZ COUNTRY OF REF DOCUMENT : DE COUNTRY OF REF DOCUMENT : DK COUNTRY OF REF DOCUMENT : EE COUNTRY OF REF DOCUMENT : ES COUNTRY OF REF DOCUMENT : FI COUNTRY OF REF DOCUMENT : FR COUNTRY OF REF DOCUMENT : GB COUNTRY OF REF DOCUMENT : GR COUNTRY OF REF DOCUMENT : HU COUNTRY OF REF DOCUMENT : IE COUNTRY OF REF DOCUMENT : IS COUNTRY OF REF DOCUMENT : IT COUNTRY OF REF DOCUMENT : LI COUNTRY OF REF DOCUMENT : LT COUNTRY OF REF DOCUMENT : LU COUNTRY OF REF DOCUMENT : LV COUNTRY OF REF DOCUMENT : MC COUNTRY OF REF DOCUMENT : MT COUNTRY OF REF DOCUMENT : NL COUNTRY OF REF DOCUMENT : PL COUNTRY OF REF DOCUMENT : PT COUNTRY OF REF DOCUMENT : RO COUNTRY OF REF DOCUMENT : SE COUNTRY OF REF DOCUMENT : SI COUNTRY OF REF DOCUMENT : SK COUNTRY OF REF DOCUMENT : TR
EP1994917 A1	20110622	LSGT	REG	REFERENCE TO A NATIONAL CODE	REF COUNTRY CODE : GB REF LEGAL EVENT CODE : FG4D
EP1994917 A1	20110630	LSNP	REG	REFERENCE TO A NATIONAL CODE	REF COUNTRY CODE : CH REF LEGAL EVENT CODE : EP
EP1994917 A1	20110720	LSGT	REG	REFERENCE TO A NATIONAL CODE	REF COUNTRY CODE : IE REF LEGAL EVENT CODE : FG4D
EP1994917 A1	20110811	LSPB	REG	REFERENCE TO A NATIONAL CODE	REF COUNTRY CODE : DE REF LEGAL EVENT CODE : R096 REF DOCUMENT NUMBER : 602007015337 COUNTRY OF REF DOCUMENT : DE EFFECTIVE DATE : 20110811
EP1994917 A1	20110928	LSNP	REG	REFERENCE TO A NATIONAL CODE	REF COUNTRY CODE : NL REF LEGAL EVENT CODE : T3
EP1994917 A1	20111031	LSLE	-PG25	LAPSED IN A CONTRACTING STATE ANNOUNCED VIA POSTGRANT INFORM. FROM NAT. OFFICE TO EPO	COUNTRY OF REF DOCUMENT : LT NOTIFICATIONOFLAPSE : LAPSE BECAUSE OF FAILURE TO SUBMIT A TRANSLATION OF THE DESCRIPTION OR TO PAY THE FEE WITHIN THE PRESCRIBED TIME-LIMIT LAPSED DATE : 20110622
EP1994917 A1	20111116	LSGT	REG	REFERENCE TO A NATIONAL CODE	REF COUNTRY CODE : ES REF LEGAL EVENT CODE : FG2A REF DOCUMENT NUMBER : 2368352 COUNTRY OF REF DOCUMENT : ES KIND CODE OF REF DOCUMENT : T3 DESIGNATED STATE(S) : EFFECTIVE DATE : 20111116
EP1994917 A1	20111122	LSRE	REG	REFERENCE TO A NATIONAL CODE	REF COUNTRY CODE : GR REF LEGAL EVENT CODE : EP REF DOCUMENT NUMBER : 20110402218 COUNTRY OF REF DOCUMENT : GR EFFECTIVE DATE : 20111013
EP1994917 A1	20111130	LSLE	-PG25	LAPSED IN A	COUNTRY OF REF DOCUMENT : LV

				CONTRACTING STATE ANNOUNCED VIA POSTGRANT INFORM. FROM NAT. OFFICE TO EPO	NOTIFICATIONOFLAPSE : LAPSE BECAUSE OF FAILURE TO SUBMIT A TRANSLATION OF THE DESCRIPTION OR TO PAY THE FEE WITHIN THE PRESCRIBED TIME-LIMIT LAPSED DATE : 20110622
EP1994917 A1	20111130	LSLE	-PG25	LAPSED IN A CONTRACTING STATE ANNOUNCED VIA POSTGRANT INFORM. FROM NAT. OFFICE TO EPO	COUNTRY OF REF DOCUMENT : AT NOTIFICATIONOFLAPSE : LAPSE BECAUSE OF FAILURE TO SUBMIT A TRANSLATION OF THE DESCRIPTION OR TO PAY THE FEE WITHIN THE PRESCRIBED TIME-LIMIT LAPSED DATE : 20110622
EP1994917 A1	20111130	LSLE	-PG25	LAPSED IN A CONTRACTING STATE ANNOUNCED VIA POSTGRANT INFORM. FROM NAT. OFFICE TO EPO	COUNTRY OF REF DOCUMENT : CY NOTIFICATIONOFLAPSE : LAPSE BECAUSE OF FAILURE TO SUBMIT A TRANSLATION OF THE DESCRIPTION OR TO PAY THE FEE WITHIN THE PRESCRIBED TIME-LIMIT LAPSED DATE : 20110622
EP1994917 A1	20111130	LSLE	-PG25	LAPSED IN A CONTRACTING STATE ANNOUNCED VIA POSTGRANT INFORM. FROM NAT. OFFICE TO EPO	COUNTRY OF REF DOCUMENT : SI NOTIFICATIONOFLAPSE : LAPSE BECAUSE OF FAILURE TO SUBMIT A TRANSLATION OF THE DESCRIPTION OR TO PAY THE FEE WITHIN THE PRESCRIBED TIME-LIMIT LAPSED DATE : 20110622
EP1994917 A1	20111130	LSLE	-PG25	LAPSED IN A CONTRACTING STATE ANNOUNCED VIA POSTGRANT INFORM. FROM NAT. OFFICE TO EPO	COUNTRY OF REF DOCUMENT : FI NOTIFICATIONOFLAPSE : LAPSE BECAUSE OF FAILURE TO SUBMIT A TRANSLATION OF THE DESCRIPTION OR TO PAY THE FEE WITHIN THE PRESCRIBED TIME-LIMIT LAPSED DATE : 20110622
EP1994917 A1	20120130	LSNP	REG	REFERENCE TO A NATIONAL CODE	REF COUNTRY CODE : HU REF LEGAL EVENT CODE : AG4A REF DOCUMENT NUMBER : E012026 COUNTRY OF REF DOCUMENT : HU
EP1994917 A1	20120131	LSLE	-PG25	LAPSED IN A CONTRACTING STATE ANNOUNCED VIA POSTGRANT INFORM. FROM NAT. OFFICE TO EPO	COUNTRY OF REF DOCUMENT : PT NOTIFICATIONOFLAPSE : LAPSE BECAUSE OF FAILURE TO SUBMIT A TRANSLATION OF THE DESCRIPTION OR TO PAY THE FEE WITHIN THE PRESCRIBED TIME-LIMIT LAPSED DATE : 20111024
EP1994917 A1	20120131	LSLE	-PG25	LAPSED IN A CONTRACTING STATE ANNOUNCED VIA POSTGRANT INFORM. FROM NAT. OFFICE TO EPO	COUNTRY OF REF DOCUMENT : IS NOTIFICATIONOFLAPSE : LAPSE BECAUSE OF FAILURE TO SUBMIT A TRANSLATION OF THE DESCRIPTION OR TO PAY THE FEE WITHIN THE PRESCRIBED TIME-LIMIT LAPSED DATE : 20111022
EP1994917 A1	20120131	LSLE	-PG25	LAPSED IN A CONTRACTING STATE ANNOUNCED VIA POSTGRANT INFORM. FROM NAT. OFFICE TO EPO	COUNTRY OF REF DOCUMENT : EE NOTIFICATIONOFLAPSE : LAPSE BECAUSE OF FAILURE TO SUBMIT A TRANSLATION OF THE DESCRIPTION OR TO PAY THE FEE WITHIN THE PRESCRIBED TIME-LIMIT LAPSED DATE : 20110622
EP1994917 A1	20120229	LSLE	-PG25	LAPSED IN A CONTRACTING STATE ANNOUNCED VIA POSTGRANT INFORM. FROM NAT. OFFICE TO EPO	COUNTRY OF REF DOCUMENT : PL NOTIFICATIONOFLAPSE : LAPSE BECAUSE OF FAILURE TO SUBMIT A TRANSLATION OF THE DESCRIPTION OR TO PAY THE FEE WITHIN THE PRESCRIBED TIME-LIMIT LAPSED DATE : 20110622
EP1994917 A1	20120229	LSLE	-PG25	LAPSED IN A CONTRACTING STATE ANNOUNCED VIA POSTGRANT INFORM. FROM NAT. OFFICE TO EPO	COUNTRY OF REF DOCUMENT : RO NOTIFICATIONOFLAPSE : LAPSE BECAUSE OF FAILURE TO SUBMIT A TRANSLATION OF THE DESCRIPTION OR TO PAY THE FEE WITHIN THE PRESCRIBED TIME-LIMIT LAPSED DATE : 20110622
EP1994917 A1	20120229	LSLE	-PG25	LAPSED IN A CONTRACTING STATE ANNOUNCED VIA POSTGRANT INFORM. FROM NAT. OFFICE TO	COUNTRY OF REF DOCUMENT : SK NOTIFICATIONOFLAPSE : LAPSE BECAUSE OF FAILURE TO SUBMIT A TRANSLATION OF THE DESCRIPTION OR TO PAY THE FEE WITHIN THE PRESCRIBED TIME-LIMIT

				EPO	LAPSED DATE : 20110622
EP1994917 A1	20120418	LSOP	-26	OPPOSITION FILED	PARTYTYPE : OPPONENT OPPONENT : KIMBERLY-CLARK WORLDWIDE, INC. EFFECTIVE DATE : 20120309
EP1994917 A1	20120502	LSOP	-26	OPPOSITION FILED	PARTYTYPE : OPPONENT OPPONENT : KIMBERLY-CLARK WORLDWIDE, INC. EFFECTIVE DATE : 20120309
EP1994917 A1	20120502	LSOP	-26	OPPOSITION FILED	PARTYTYPE : OPPONENT OPPONENT : SCA HYGIENE PRODUCTS AB EFFECTIVE DATE : 20120322
EP1994917 A1	20120614	LSOP	REG	REFERENCE TO A NATIONAL CODE	REF COUNTRY CODE : DE REF LEGAL EVENT CODE : R026 REF DOCUMENT NUMBER : 602007015337 COUNTRY OF REF DOCUMENT : DE EFFECTIVE DATE : 20120309
EP1994917 A1	20120629	LSLE	-PG25	LAPSED IN A CONTRACTING STATE ANNOUNCED VIA POSTGRANT INFORM. FROM NAT. OFFICE TO EPO	COUNTRY OF REF DOCUMENT : DK NOTIFICATIONOFLAPSE : LAPSE BECAUSE OF FAILURE TO SUBMIT A TRANSLATION OF THE DESCRIPTION OR TO PAY THE FEE WITHIN THE PRESCRIBED TIME-LIMIT LAPSED DATE : 20110622
EP1994917 A1	20121231	LSLE	-PG25	LAPSED IN A CONTRACTING STATE ANNOUNCED VIA POSTGRANT INFORM. FROM NAT. OFFICE TO EPO	COUNTRY OF REF DOCUMENT : MC NOTIFICATIONOFLAPSE : LAPSE BECAUSE OF NON-PAYMENT OF DUE FEES LAPSED DATE : 20120531
EP1994917 A1	20121231	LSLE	REG	REFERENCE TO A NATIONAL CODE	REF COUNTRY CODE : CH REF LEGAL EVENT CODE : PL
EP1994917 A1	20130131	LSLE	-PG25	LAPSED IN A CONTRACTING STATE ANNOUNCED VIA POSTGRANT INFORM. FROM NAT. OFFICE TO EPO	COUNTRY OF REF DOCUMENT : CH NOTIFICATIONOFLAPSE : LAPSE BECAUSE OF NON-PAYMENT OF DUE FEES LAPSED DATE : 20120531
EP1994917 A1	20130131	LSLE	-PG25	LAPSED IN A CONTRACTING STATE ANNOUNCED VIA POSTGRANT INFORM. FROM NAT. OFFICE TO EPO	COUNTRY OF REF DOCUMENT : LI NOTIFICATIONOFLAPSE : LAPSE BECAUSE OF NON-PAYMENT OF DUE FEES LAPSED DATE : 20120531
EP1994917 A1	20130227	LSLE	REG	REFERENCE TO A NATIONAL CODE	REF COUNTRY CODE : IE REF LEGAL EVENT CODE : MM4A
EP1994917 A1	20130430	LSLE	-PG25	LAPSED IN A CONTRACTING STATE ANNOUNCED VIA POSTGRANT INFORM. FROM NAT. OFFICE TO EPO	COUNTRY OF REF DOCUMENT : IE NOTIFICATIONOFLAPSE : LAPSE BECAUSE OF NON-PAYMENT OF DUE FEES LAPSED DATE : 20120525
EP1994917 A1	20130628	LSLE	-PG25	LAPSED IN A CONTRACTING STATE ANNOUNCED VIA POSTGRANT INFORM. FROM NAT. OFFICE TO EPO	COUNTRY OF REF DOCUMENT : BG NOTIFICATIONOFLAPSE : LAPSE BECAUSE OF FAILURE TO SUBMIT A TRANSLATION OF THE DESCRIPTION OR TO PAY THE FEE WITHIN THE PRESCRIBED TIME-LIMIT LAPSED DATE : 20110922
EP1994917 A1	20130731	LSLE	-PG25	LAPSED IN A CONTRACTING STATE ANNOUNCED VIA POSTGRANT INFORM. FROM NAT. OFFICE TO EPO	COUNTRY OF REF DOCUMENT : MT NOTIFICATIONOFLAPSE : LAPSE BECAUSE OF FAILURE TO SUBMIT A TRANSLATION OF THE DESCRIPTION OR TO PAY THE FEE WITHIN THE PRESCRIBED TIME-LIMIT LAPSED DATE : 20110622
EP1994917 A1	20140530	LSLE	-PG25	LAPSED IN A CONTRACTING STATE ANNOUNCED VIA POSTGRANT INFORM. FROM NAT. OFFICE TO	COUNTRY OF REF DOCUMENT : LU NOTIFICATIONOFLAPSE : LAPSE BECAUSE OF NON-PAYMENT OF DUE FEES LAPSED DATE : 20120525

				EPO	
EP1994917 A1	20140829	LSFE	+PGFP	POSTGRANT: ANNUAL FEES PAID TO NATIONAL OFFICE	COUNTRY OF REF DOCUMENT : CZ PAYMENT DATE : 20140513 YEAR OF FEE PAYMENT : 8
EP1994917 A1	20140829	LSFE	+PGFP	POSTGRANT: ANNUAL FEES PAID TO NATIONAL OFFICE	COUNTRY OF REF DOCUMENT : GR PAYMENT DATE : 20140429 YEAR OF FEE PAYMENT : 8
EP1994917 A1	20140930	LSFE	+PGFP	POSTGRANT: ANNUAL FEES PAID TO NATIONAL OFFICE	COUNTRY OF REF DOCUMENT : BE PAYMENT DATE : 20140515 YEAR OF FEE PAYMENT : 8
EP1994917 A1	20150225	LSOP	-R26	OPPOSITION FILED (CORRECTION)	PARTYTYPE : OPPONENT OPPONENT : KIMBERLY-CLARK WORLDWIDE, INC. EFFECTIVE DATE : 20120309
EP1994917 A1	20150731	LSFE	+PGFP	POSTGRANT: ANNUAL FEES PAID TO NATIONAL OFFICE	COUNTRY OF REF DOCUMENT : TR PAYMENT DATE : 20150504 YEAR OF FEE PAYMENT : 9
EP1994917 A1	20150731	LSFE	+PGFP	POSTGRANT: ANNUAL FEES PAID TO NATIONAL OFFICE	COUNTRY OF REF DOCUMENT : SE PAYMENT DATE : 20150507 YEAR OF FEE PAYMENT : 9
EP1994917 A1	20150731	LSFE	+PGFP	POSTGRANT: ANNUAL FEES PAID TO NATIONAL OFFICE	COUNTRY OF REF DOCUMENT : ES PAYMENT DATE : 20150512 YEAR OF FEE PAYMENT : 9
EP1994917 A1	20150831	LSFE	+PGFP	POSTGRANT: ANNUAL FEES PAID TO NATIONAL OFFICE	COUNTRY OF REF DOCUMENT : IT PAYMENT DATE : 20150514 YEAR OF FEE PAYMENT : 9
EP1994917 A1	20150831	LSFE	+PGFP	POSTGRANT: ANNUAL FEES PAID TO NATIONAL OFFICE	COUNTRY OF REF DOCUMENT : HU PAYMENT DATE : 20150424 YEAR OF FEE PAYMENT : 9
EP1994917 A1	20150831	LSFE	+PGFP	POSTGRANT: ANNUAL FEES PAID TO NATIONAL OFFICE	COUNTRY OF REF DOCUMENT : NL PAYMENT DATE : 20150512 YEAR OF FEE PAYMENT : 9
EP1994917 A1	20160129	LSLE	-PG25	LAPSED IN A CONTRACTING STATE ANNOUNCED VIA POSTGRANT INFORM. FROM NAT. OFFICE TO EPO	COUNTRY OF REF DOCUMENT : GR NOTIFICATIONOFLAPSE : LAPSE BECAUSE OF NON-PAYMENT OF DUE FEES LAPSED DATE : 20151208
EP1994917 A1	20160229	LSLE	-PG25	LAPSED IN A CONTRACTING STATE ANNOUNCED VIA POSTGRANT INFORM. FROM NAT. OFFICE TO EPO	COUNTRY OF REF DOCUMENT : CZ NOTIFICATIONOFLAPSE : LAPSE BECAUSE OF NON-PAYMENT OF DUE FEES LAPSED DATE : 20150525
EP1994917 A1	20160304	LSLE	REG	REFERENCE TO A NATIONAL CODE	REF COUNTRY CODE : GR REF LEGAL EVENT CODE : ML REF DOCUMENT NUMBER : 20110402218 COUNTRY OF REF DOCUMENT : GR EFFECTIVE DATE : 20151208
EP1994917 A1	20160428	LSFE	REG	REFERENCE TO A NATIONAL CODE	COUNTRY OF REF DOCUMENT : FR REF COUNTRY CODE : FR REF LEGAL EVENT CODE : PLFP YEAR OF FEE PAYMENT : 10
EP1994917 A1	20160729	LSFE	+PGFP	POSTGRANT: ANNUAL FEES PAID TO NATIONAL OFFICE	COUNTRY OF REF DOCUMENT : DE PAYMENT DATE : 20160524 YEAR OF FEE PAYMENT : 10
EP1994917 A1	20160729	LSFE	+PGFP	POSTGRANT: ANNUAL FEES PAID TO NATIONAL OFFICE	COUNTRY OF REF DOCUMENT : GB PAYMENT DATE : 20160426 YEAR OF FEE PAYMENT : 10
EP1994917 A1	20160831	LSFE	+PGFP	POSTGRANT: ANNUAL FEES PAID TO NATIONAL OFFICE	COUNTRY OF REF DOCUMENT : FR PAYMENT DATE : 20160428 YEAR OF FEE PAYMENT : 10
EP1994917 A1	20170228	LSLE	-PG25	LAPSED IN A CONTRACTING STATE ANNOUNCED VIA POSTGRANT	COUNTRY OF REF DOCUMENT : NL NOTIFICATIONOFLAPSE : LAPSE BECAUSE OF NON-PAYMENT OF DUE FEES

				INFORM. FROM NAT. OFFICE TO EPO	LAPSED DATE : 20160601
EP1994917 A1	20170228	LSLE	-PG25	LAPSED IN A CONTRACTING STATE ANNOUNCED VIA POSTGRANT INFORM. FROM NAT. OFFICE TO EPO	COUNTRY OF REF DOCUMENT : SE NOTIFICATIONOFLAPSE : LAPSE BECAUSE OF NON-PAYMENT OF DUE FEES LAPSED DATE : 20160526
EP1994917 A1	20170228	LSLE	-PG25	LAPSED IN A CONTRACTING STATE ANNOUNCED VIA POSTGRANT INFORM. FROM NAT. OFFICE TO EPO	COUNTRY OF REF DOCUMENT : IT NOTIFICATIONOFLAPSE : LAPSE BECAUSE OF NON-PAYMENT OF DUE FEES LAPSED DATE : 20160525
EP1994917 A1	20170413	LSFE	REG	REFERENCE TO A NATIONAL CODE	REF COUNTRY CODE : FR REF LEGAL EVENT CODE : PLFP YEAR OF FEE PAYMENT : 11
EP1994917 A1	20170428	LSLE	-PG25	LAPSED IN A CONTRACTING STATE ANNOUNCED VIA POSTGRANT INFORM. FROM NAT. OFFICE TO EPO	COUNTRY OF REF DOCUMENT : HU NOTIFICATIONOFLAPSE : LAPSE BECAUSE OF NON-PAYMENT OF DUE FEES LAPSED DATE : 20160526
EP1994917 A1	20170731	LSLE	-PG25	LAPSED IN A CONTRACTING STATE ANNOUNCED VIA POSTGRANT INFORM. FROM NAT. OFFICE TO EPO	COUNTRY OF REF DOCUMENT : BE NOTIFICATIONOFLAPSE : LAPSE BECAUSE OF NON-PAYMENT OF DUE FEES LAPSED DATE : 20150531
EP1994917 A1	20170731	LSFE	+PGFP	POSTGRANT: ANNUAL FEES PAID TO NATIONAL OFFICE	COUNTRY OF REF DOCUMENT : GB PAYMENT DATE : 20170524 YEAR OF FEE PAYMENT : 11
EP1994917 A1	20170731	LSFE	+PGFP	POSTGRANT: ANNUAL FEES PAID TO NATIONAL OFFICE	COUNTRY OF REF DOCUMENT : FR PAYMENT DATE : 20170413 YEAR OF FEE PAYMENT : 11
EP1994917 A1	20170731	LSFE	+PGFP	POSTGRANT: ANNUAL FEES PAID TO NATIONAL OFFICE	COUNTRY OF REF DOCUMENT : DE PAYMENT DATE : 20170516 YEAR OF FEE PAYMENT : 11
EP1994917 B1	20110622	LSGT	+	granted / extensions (spc, cpc, pte)	
EP1994917 B1	20270525	PEXP		Calculated Patent Term Expiry	
ES2368352 T3	20111116	LSGT	+	granted / extensions (spc, cpc, pte)	
ES2368352 T3	20270525	PEXP		Calculated Patent Term Expiry	
IN07261DN2009 A	20100625	LSPB	+	published / reissued	
IN283793 B	20170602	LSGT	+	granted / extensions (spc, cpc, pte)	
IN283793 B	20291110	PEXP		Calculated Patent Term Expiry	
JP2010527682 T2	20100819	LSPB	+	published / reissued	
JP2010527682 T2	20110810	LSRE	A521	WRITTEN AMENDMENT	TEXT : JAPANESE INTERMEDIATE CODE: A523 EFFECTIVE DATE : 20110809
JP2010527682 T2	20110907	LSES	-A131	NOTIFICATION OF REASONS FOR REFUSAL	TEXT : JAPANESE INTERMEDIATE CODE: A131 EFFECTIVE DATE : 20110906
JP2010527682 T2	20111207	LSRE	A521	WRITTEN AMENDMENT	TEXT : JAPANESE INTERMEDIATE CODE: A523 EFFECTIVE DATE : 20111206
JP2010527682 T2	20120206	LSES	-A131	NOTIFICATION OF REASONS FOR REFUSAL	TEXT : JAPANESE INTERMEDIATE CODE: A131 EFFECTIVE DATE : 20120203

JP2010527682 T2	20120525	LSRE	A521	WRITTEN AMENDMENT	TEXT : JAPANESE INTERMEDIATE CODE: A523 EFFECTIVE DATE : 20120524
JP2010527682 T2	20120618	LSGT	+TRDD	DECISION OF GRANT OR REJECTION WRITTEN	
JP2010527682 T2	20120625	LSGT	+A01	WRITTEN DECISION TO GRANT A PATENT OR TO GRANT A REGISTRATION (UTILITY MODEL)	TEXT : JAPANESE INTERMEDIATE CODE: A01 EFFECTIVE DATE : 20120622
JP2010527682 T2	20120628	LSGT	+A01	WRITTEN DECISION TO GRANT A PATENT OR TO GRANT A REGISTRATION (UTILITY MODEL)	TEXT : JAPANESE INTERMEDIATE CODE: A01
JP2010527682 T2	20120726	LSFE	+A61	FIRST PAYMENT OF ANNUAL FEES (DURING GRANT PROCEDURE)	TEXT : JAPANESE INTERMEDIATE CODE: A61 EFFECTIVE DATE : 20120718
JP2010527682 T2	20120727	LSFE	+FPAY	RENEWAL FEE PAYMENT (EVENT DATE IS RENEWAL DATE OF DATABASE)	YEAR OF FEE PAYMENT : 3
JP2010527682 T2	20120727	LSGT	+R150	CERTIFICATE OF PATENT OR REGISTRATION OF UTILITY MODEL	TEXT : JAPANESE INTERMEDIATE CODE: R150
JP5048126 B2	20121017	LSGT	+	granted / extensions (spc, cpc, pte)	
JP5048126 B2	20150727	LSLE	-LAPS	CANCELLATION BECAUSE OF NO PAYMENT OF ANNUAL FEES	
JP5048126 B2	20280523	PEXP		Calculated Patent Term Expiry	
KR20100005140 A	20100113	LSPB	+	published / reissued	
KR20100005140 A	20091203	LSES	A201	REQUEST FOR EXAMINATION	
KR20100005140 A	20091203	LSRE	AMND	AMENDMENT	
KR20100005140 A	20110727	LSES	-E902	NOTIFICATION OF REASON FOR REFUSAL	
KR20100005140 A	20110927	LSRE	AMND	AMENDMENT	
KR20100005140 A	20120326	LSRV	-E601	DECISION TO REFUSE APPLICATION	
KR20100005140 A	20120525	LSRE	AMND	AMENDMENT	
KR20100005140 A	20130701	LSAL	J2X1	APPEAL (BEFORE THE PATENT COURT)	TEXT : APPEAL AGAINST DECISION TO DECLINE REFUSAL
MX2009012736 A1	20091210	LSPB	+	published / reissued	
MX2009012736 A1	20111208	LSGT	+FG	GRANT OR REGISTRATION	
RU2009141776 A	20110710	LSPB	+	published / reissued	
RU2454981 C2	20120710	LSGT	+	granted / extensions (spc, cpc, pte)	
RU2454981 C2	20170202	LSLE	-MM4A	THE PATENT IS INVALID DUE TO NON-PAYMENT OF FEES	EFFECTIVE DATE : 20160524
RU2454981 C2	20280523	PEXP		Calculated Patent Term Expiry	
US2008294140 AA	20081127	LSPB	+	published / reissued	
US2013338621 AA	20131219	LSPB	+	published /	

				reissued	
US2013338621 AA	20151214	LSES	NFA1	Non Final Action Mailed	
US2013338621 AA	20170203	LSWD	-ABD3	Abandoned -- Failure to Respond to an Office Action	
US2015080824 AA	20150319	LSPB	+	published / reissued	
US2015080824 AA	20160304	LSWD	-ABD3	Abandoned -- Failure to Respond to an Office Action	
US2016367412 AA	20161222	LSPB	+	published / reissued	
US2016367412 AA	20170623	LSES	NFA1	Non Final Action Mailed	
US8536401 BB	20130917	LSGT	+	granted / extensions (spc, cpc, pte)	
US8536401 BB	20080520	LSAS	AS	ASSIGNMENT	PARTYTYPE : OWNER OWNER : THE PROCTER & GAMBLE COMPANY, OHIO OLDPARTY : ASSIGNMENT OF ASSIGNORS INTEREST; ASSIGNORS:ECKER, CORNELIA; GAGLIARDI, IVANO; VEGLIO, PAOLO; REEL/FRAME:020972/0263; SIGNING DATES FROM 20080514 TO 20080515
US8536401 BB	20080520	LSAS	AS	ASSIGNMENT	PARTYTYPE : OWNER OWNER : THE PROCTER & GAMBLE COMPANY, OHIO OLDPARTY : ASSIGNMENT OF ASSIGNORS INTEREST; ASSIGNORS:ECKER, CORNELIA; GAGLIARDI, IVANO; VEGLIO, PAOLO; SIGNING DATES FROM 20080514 TO 20080515; REEL/FRAME:020972/0263
US8536401 BB	20130828	LSGT	PAT1	Patented Case	
US8536401 BB	20170224	LSFE	+FPAY	FEE PAYMENT	YEAR OF FEE PAYMENT : 4
US8536401 BB	20281222	PEXP		Calculated Patent Term Expiry (PTA 216 days and a terminal disclaimer has been filed)	
WO08146222 A1	20081204	LSPB	+	published / reissued	
WO08146222 A1	20091119	LSNP	+WWE	WIPO INFORMATION: ENTRY INTO NATIONAL PHASE	REF DOCUMENT NUMBER : 2010508962 COUNTRY OF REF DOCUMENT : JP
WO08146222 A1	20091124	LSNP	ENP	ENTRY INTO THE NATIONAL PHASE IN:	REF DOCUMENT NUMBER : 20097024405 COUNTRY OF REF DOCUMENT : KR KIND CODE OF REF DOCUMENT : A DESIGNATED STATE(S) :
WO08146222 A1	20091125	LSNP	+WWE	WIPO INFORMATION: ENTRY INTO NATIONAL PHASE	REF DOCUMENT NUMBER : 2008256307 COUNTRY OF REF DOCUMENT : AU
WO08146222 A1	20091125	LSNP	+WWE	WIPO INFORMATION: ENTRY INTO NATIONAL PHASE	REF DOCUMENT NUMBER : 2688350 COUNTRY OF REF DOCUMENT : CA
WO08146222 A1	20091126	LSNE	NENP	NON-ENTRY INTO THE NATIONAL PHASE IN:	REF COUNTRY CODE : DE
WO08146222 A1	20091217	LSNP	ENP	ENTRY INTO THE NATIONAL PHASE IN:	REF DOCUMENT NUMBER : 2008256307 COUNTRY OF REF DOCUMENT : AU DATE OF REF DOCUMENT : 20080523 KIND CODE OF REF DOCUMENT : A DESIGNATED STATE(S) :
WO08146222 A1	20091225	LSNP	+WWE	WIPO INFORMATION: ENTRY INTO	REF DOCUMENT NUMBER : 2009141776 COUNTRY OF REF DOCUMENT : RU

				NATIONAL PHASE	
WO08146222 A1	20100623	LSNE	-122	EP: PCT APPLICATION NON-ENTRY IN EUROPEAN PHASE	REF DOCUMENT NUMBER : 08763095 COUNTRY OF REF DOCUMENT : EP KIND CODE OF REF DOCUMENT : A1 DESIGNATED STATE(S) :
WO08146222 A1	20141125	LSNP	ENP	ENTRY INTO THE NATIONAL PHASE IN:	REF DOCUMENT NUMBER : PI0812301 COUNTRY OF REF DOCUMENT : BR KIND CODE OF REF DOCUMENT : A2 DESIGNATED STATE(S) : EFFECTIVE DATE : 20091124
ZA200907713 A	20100728	LSGT	+	granted / extensions (spc, cpc, pte)	
ZA200907713 A	20291102	PEXP		Calculated Patent Term Expiry	

19) Family number: 45443534 (US2010152687A) © PatBase

Title: FEMININE UNDERGARMENT

Abstract: Source: US2010152687A An undergarment comprises a strapless, coreless web sized and configured between an anterior end and a posterior end to cover, in use, at least the vulva of an adult female wearer. The undergarment is pre-adherent to the wearer, e.g., having pre-applied adhesive or pre-applied suction material on the body side of the web, suitable for contact with human skin and sufficiently adherent to removably hold the undergarment in place during use. In another aspect, a feminine undergarment comprises such pre-adherent strapless, coreless web with a removable protective cover over at least the adhesive. In another aspect, a package of feminine undergarments comprises outer packaging containing at least multiple of such feminine undergarments and optionally inner packaging for each of the undergarments individually.

Classifications:
International (IPC 8-9): A41B9/04 A61B19/02 A61F13/15 A61F13/45 A61F13/82 A61F15/00 (Advanced/Invention);
A41B9/00 A61B19/00 A61B19/02 A61F13/15 A61F13/56 A61F15/00 (Core/Invention)
International (IPC 1-7): A41B9/04 A61B 19/02 A61F13/15
CPC: A41B9/04 A61F13/47245 A61F13/82 A61F13/8405 A61F15/003
European: A41B9/04 A61F13/15B1B7B A61F13/472C1 A61F13/82 A61F15/00B4 K61F13/15H8 K61F13/84B
US: 206/440 206/440S 604/359 604/359P 604/367 604/367S 604/378 604/378S 604/385.01 604/385.010S 604/387 604/387S

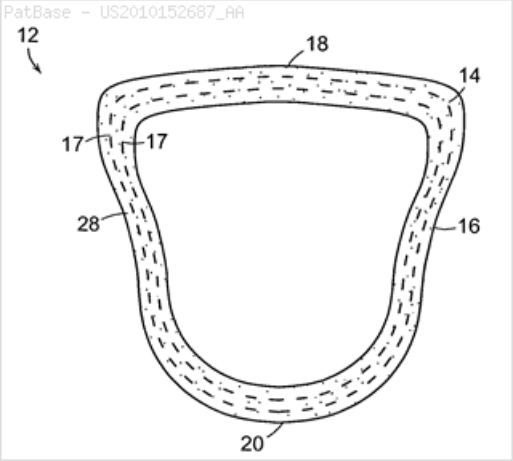

Family:

Publication number	Publication date	Application number	Application date
AR074766 AA	20110209	AR2009P104934	20091217
AU2009333850 AA	20100708	AU20090333850	20091215
CA2789487 AA	20100708	CA20092789487	20091215
CN101969909 A	20110209	CN200980108600	20091215
EP2379038 A1	20111026	EP20090775387	20091215
PA8854701 A1	20100727	PA20090088547	20091217
SG172189 A1	20110728	SG20110044021	20091215
TH108829 A	20110624	TH20091005671	20091217
US2010152687 AA	20100617	US20090654241	20091215
WO10077306 A1	20100708	WO2009US06555	20091215

Priority:
US20080138343P 20081217 US20090654241 20091215 WO2009US06555 20091215

Probable Assignee: CARLOZZI ANTONELLA

Assignee(s): (std): ANTONELLA F CARLOZZI ; CARLOZZI ANTONELLA ; CARLOZZI ANTONELLA F

Inventor(s): (std): ANTONELLA F CARLOZZI ; CARLOZZI ANTONELLA F

Agent(s): SHELSTON IP; SHELSTON IP PTY LTD; NA; MILLER JAMES LIONEL WOOLVERTON; BUCHANAN INGERSOLL AND ROONEY PC; LIU FANG

Designated states: AE AG AL AM AO AT AU AZ BA BB BE BF BG BH BJ BR BW BY BZ CA CF CG CH CI CL CM CN CO CR CU CY CZ DE DK DM DO DZ EC EE EG ES FI FR GA GB GD GE GH GM GN GQ GR GT GW HN HR HU ID IE IL IN IS IT JP KE KG KM KN KP KR KZ LA LC LI LK LR LS LT LU LV LY MA MC MD ME MG MK ML MN MR MT MW MX MY MZ NA NE NG NI NL NO NZ OM PE PG PH PL PT RO RS RU SC SD SE SG SI SK SL SM SN ST SV SY SZ TD TG TJ TM TN TR TT TZ UA UG US UZ VC VN ZA ZM ZW

Legal status (INPADOC)

View legal status timeline

Patent	Date recorded	Event group	Code	Event	Details
AR074766 AA	20110209	LSPB	+	published / reissued	
AR074766 AA	20130107	LSWD	-FB	SUSPENSION OF GRANTING PROCEDURE	
AU2009333850 AA	20100708	LSPB	+	published / reissued	
AU2009333850 AA	20140710	LSLE	-MK4	APPLICATION LAPSED SECTION 142(2)(D) - NO CONTINUATION FEE PAID FOR THE APPLICATION	
CA2789487 AA	20100708	LSPB	+	published / reissued	
CA2789487 AA	20140211	LSLE	-FZDE	DEAD	EFFECTIVE DATE : 20131217
CN101969909 A	20110209	LSPB	+	published / reissued	

CN101969909 A	20110209	LSPB	+C06	PUBLICATION	
CN101969909 A	20140730	LSDW	-C02	DEEMED WITHDRAWAL OF PATENT APPLICATION AFTER PUBLICATION (PATENT LAW 2001)	
EP2379038 A1	20111026	LSPB	+	published / reissued	
EP2379038 A1	20111026	LSES	+17P	REQUEST FOR EXAMINATION FILED	EFFECTIVE DATE : 20110718
EP2379038 A1	20130814	LSES	+17Q	FIRST EXAMINATION REPORT	EFFECTIVE DATE : 20130712
EP2379038 A1	20140709	LSDW	-18D	APPLICATION DEEMED TO BE WITHDRAWN	EFFECTIVE DATE : 20140123
PA8854701 A1	20100727	LSPB	+	published / reissued	
SG172189 A1	20110728	LSPB	+	published / reissued	
TH108829 A	20110624	LSPB	+	published / reissued	
US2010152687 AA	20100617	LSPB	+	published / reissued	
US2010152687 AA	20131022	LSAL	EAA1	Examiner's Answer to Appeal Brief Mailed	
US2010152687 AA	20160209	LSAL	APL5	On Appeal -- Awaiting Decision by the Board of Appeals	
WO10077306 A1	20100708	LSPB	+	published / reissued	
WO10077306 A1	20110617	LSNE	NENP	NON-ENTRY INTO THE NATIONAL PHASE IN:	REF COUNTRY CODE : DE
WO10077306 A1	20110715	LSNP	+WWE	WIPO INFORMATION: ENTRY INTO NATIONAL PHASE	REF DOCUMENT NUMBER : 2009333850 COUNTRY OF REF DOCUMENT : AU
WO10077306 A1	20110811	LSNP	ENP	ENTRY INTO THE NATIONAL PHASE IN:	REF DOCUMENT NUMBER : 2009333850 COUNTRY OF REF DOCUMENT : AU DATE OF REF DOCUMENT : 20091215 KIND CODE OF REF DOCUMENT : A DESIGNATED STATE(S) :
WO10077306 A1	20120615	LSNP	ENP	ENTRY INTO THE NATIONAL PHASE IN:	REF DOCUMENT NUMBER : 2789487 COUNTRY OF REF DOCUMENT : CA

20) Family number: 8546923 (US5562793A)

© PatBase

Title: METHODS AND APPARATUS FOR MAKING MULTI-LAYER ABSORBENT PRODUCTS

Abstract: Source: US5562793A Improved methods and apparatus for forming absorbent products and the improved absorbent products formed thereby are disclosed. In a first embodiment of the present invention, a rotary die is used to cut ellipsoidal and hyperbolic-shaped from a single sheet of material and these shapes are overlaid to form an absorbent structure. The shapes are chosen such that there is no waste of the material and yet the resulting absorbent structure is of a useful shape. Methods are also disclosed whereby two sets of rotary dies are used to simultaneously cut two sheets of material into an arcuate segment and the arcuate segments are overlaid atop each other to form useful absorbent structures. In either embodiment, powders such as superabsorbents may be added to one or more of the surfaces of the components used to construct the absorbent structures.

Classifications:
International (IPC 8-9): A61F13/15 A61F13/472 A61F13/49 A61F13/53 B26D11/00 B26F1/38 B32B5/22 G06F3/033 (Advanced/Invention); A61F13/15 B26D11/00 B26F1/38 G06F3/033 (Core/Invention)
International (IPC 1-7): A61F13/15 A61F13/53 B32B31/04 B32B31/104 B32B31/16
CPC: Y10T156/1051 Y10T156/1074 Y10T156/1075 A61F13/472 A61F13/15723 A61F13/15747 A61F13/53409 A61F2013/1591 A61F2013/15918 A61F2013/4568 A61F2013/4708 A61F2013/49082 A61F2013/530007 A61F2013/530255 A61F2013/530299 A61F2013/53051 A61F2013/53445 A61F2013/8408 A61F2013/8414 B26D11/00 B26F1/384
European: A61F13/15M6B A61F13/15M6F A61F13/472 B26D11/00 B26F1/38B K61F13/15H11A K61F13/15M11E5 K61F13/15M11F K61F13/45C4 K61F13/47D K61F13/49H8 K61F13/534B K61F13/534C K61F13/53L K61F13/53M4D K61F13/53M4E K61F13/53Q2 K61F13/84B1 K61F13/84B1B
US: 156/227 156/263 156/264 604/385.1

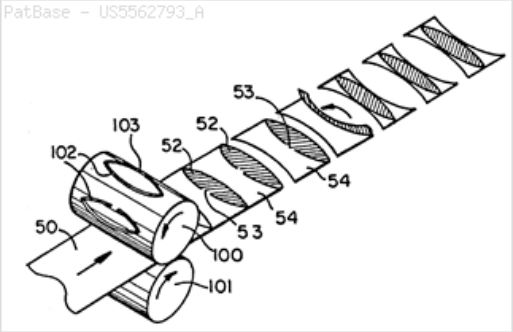

Family:

Publication number	Publication date	Application number	Application date
AT174781 E	19990115	AT19950102914T	19950301
AU199513594 A1	19950907	AU19950013594	19950302
AU680985 B2	19970814	AU19950013594	19950302
CA2143803 AA	19950903	CA19952143803	19950302
CA2143803 C	20060620	CA19952143803	19950302
DE69506751 D1	19990204	DE19956006751	19950301
DE69506751 T2	19990722	DE19956006751T	19950301
DK0670153 T3	19990823	DK19950102914T	19950301
EP0670153 A1	19950906	EP19950102914	19950301
EP0670153 B1	19981223	EP19950102914	19950301
ES2125502 T3	19990301	ES19950102914T	19950301
GR3029429 T3	19990528	GR19990400512T	19990217
HK1012546 A1	20000505	HK19980114027	19981218
JP7313548 A2	19951205	JP19950066710	19950302
NZ270582 A	19970224	NZ19950270582	19950227
PH31502 A	19981103	PH19950050047	19950103
SG24091 A1	19960210	SG19950000040	19950301
SI0670153 T1	19991231	SI19950030229T	19950301
TH24920 A	19970429	TH19951000429	19950301
TW276989 B	19960601	TW19950104297	19950501
US5562793 A	19961008	US19950452449	19950526

Priority:

CA19952143803 19950302 EP19950102914 19950301 US19950452449 19950526
SG19950000040 19950301 US19940204127 19940302

Probable Assignee: MCNEIL PPC INC

Assignee(s): (std): MCNEIL PPC INC ; PERSONAL PRODUCTS CO

Assignee(s): PERSONAL PROD CO ; PERSONAL PRODUCTS COMPANY ; MENARD MICHAEL J ; Mcneil-PPC ; MCNEIL PPC INC MILLTOWN N J US ; Inc. ; MCNEIL PPC

Inventor(s): (std): MENARD MICHAEL J ; MERNARD MICHAEL ; MAIKERU JIEI MENAADO

Inventor(s): Menard ; MICHAEL J MENARD ; Michael J.

Agent(s): SHELSTON IP; SHELSTON IP PTY LTD; SMART AND BIGGAR

Designated states: AT BE CH DE DK ES FR GB GR IE IT LI LU MC NL PT SE

Legal status (INPADOC)

View legal status timeline

Patent	Date recorded	Event group	Code	Event	Details
AT174781 E	19990115	LSGT	+	granted / extensions (spc, cpc, pte)	
AT174781 E	19990915	LSPB	+UEP	PUBLICATION OF TRANSLATION OF EUROPEAN PATENT SPECIFICATION	

AT174781 E	20150301	PEXP		Calculated Patent Term Expiry	
AU199513594 A1	19950907	LSPB	+	published / reissued	
AU680985 B2	19970814	LSGT	+	granted / extensions (spc, cpc, pte)	
AU680985 B2	20150302	PEXP		Calculated Patent Term Expiry	
CA2143803 AA	19950903	LSPB	+	published / reissued	
CA2143803 AA	20020304	LSES	+EEER	EXAMINATION REQUEST	
CA2143803 C	20060620	LSGT	+	granted / extensions (spc, cpc, pte)	
CA2143803 C	20150504	LSLE	-MKEX	EXPIRY	EFFECTIVE DATE : 20150302
CA2143803 C	20150302	PEXP		Calculated Patent Term Expiry	
DE69506751 D1	20000120	LSGT	+8364	NO OPPOSITION DURING TERM OF OPPOSITION	
DE69506751 T2	19990722	LSGT	+	granted / extensions (spc, cpc, pte)	
DE69506751 T2	20150301	PEXP		Calculated Patent Term Expiry	
DK0670153 T3	19990823	LSGT	+	granted / extensions (spc, cpc, pte)	
DK0670153 T3	20150301	PEXP		Calculated Patent Term Expiry	
EP0670153 A1	19950906	LSPB	+	published / reissued	
EP0670153 A1	19960424	LSES	+17P	REQUEST FOR EXAMINATION FILED	EFFECTIVE DATE : 19960229
EP0670153 A1	19970319	LSES	+17Q	FIRST EXAMINATION REPORT	EFFECTIVE DATE : 19970204
EP0670153 A1	19981231	LSNP	REG	REFERENCE TO A NATIONAL CODE	REF COUNTRY CODE : CH REF LEGAL EVENT CODE : EP
EP0670153 A1	19990210	LSGT	REG	REFERENCE TO A NATIONAL CODE	REF COUNTRY CODE : IE REF LEGAL EVENT CODE : FG4D
EP0670153 A1	19990301	LSGT	REG	REFERENCE TO A NATIONAL CODE	REF COUNTRY CODE : ES REF LEGAL EVENT CODE : FG2A REF DOCUMENT NUMBER : 2125502 COUNTRY OF REF DOCUMENT : ES KIND CODE OF REF DOCUMENT : T3 DESIGNATED STATE(S) :
EP0670153 A1	19991215	LSGT	+26N	NO OPPOSITION FILED	
EP0670153 A1	20050110	LSFE	REG	REFERENCE TO A NATIONAL CODE	REF COUNTRY CODE : SI REF LEGAL EVENT CODE : IF
EP0670153 A1	20050301	LSLE	-PG25	LAPSED IN A CONTRACTING STATE ANNOUNCED VIA POSTGRANT INFORM. FROM NAT. OFFICE TO EPO	COUNTRY OF REF DOCUMENT : IT NOTIFICATIONOFLAPSE : LAPSE BECAUSE OF NON-PAYMENT OF DUE FEES LAPSED DATE : 20050301
EP0670153 A1	20070227	LSFE	+PGFP	POSTGRANT: ANNUAL FEES PAID TO NATIONAL OFFICE	COUNTRY OF REF DOCUMENT : MC PAYMENT DATE : 20070227 YEAR OF FEE PAYMENT : 13
EP0670153 A1	20070228	LSFE	+PGFP	POSTGRANT: ANNUAL FEES PAID TO NATIONAL OFFICE	COUNTRY OF REF DOCUMENT : LU PAYMENT DATE : 20070228 YEAR OF FEE PAYMENT : 13
EP0670153 A1	20070301	LSFE	+PGFP	POSTGRANT: ANNUAL FEES PAID TO NATIONAL OFFICE	COUNTRY OF REF DOCUMENT : CH PAYMENT DATE : 20070301 YEAR OF FEE PAYMENT : 13
EP0670153 A1	20070301	LSFE	+PGFP	POSTGRANT: ANNUAL FEES PAID TO NATIONAL OFFICE	COUNTRY OF REF DOCUMENT : PT PAYMENT DATE : 20070301 YEAR OF FEE PAYMENT : 13

EP0670153 A1	20070304	LSFE	+PGFP	POSTGRANT: ANNUAL FEES PAID TO NATIONAL OFFICE	COUNTRY OF REF DOCUMENT : NL PAYMENT DATE : 20070304 YEAR OF FEE PAYMENT : 13
EP0670153 A1	20070307	LSFE	+PGFP	POSTGRANT: ANNUAL FEES PAID TO NATIONAL OFFICE	COUNTRY OF REF DOCUMENT : SE PAYMENT DATE : 20070307 YEAR OF FEE PAYMENT : 13
EP0670153 A1	20070313	LSFE	+PGFP	POSTGRANT: ANNUAL FEES PAID TO NATIONAL OFFICE	COUNTRY OF REF DOCUMENT : IE PAYMENT DATE : 20070313 YEAR OF FEE PAYMENT : 13
EP0670153 A1	20070315	LSFE	+PGFP	POSTGRANT: ANNUAL FEES PAID TO NATIONAL OFFICE	COUNTRY OF REF DOCUMENT : DK PAYMENT DATE : 20070315 YEAR OF FEE PAYMENT : 13
EP0670153 A1	20070514	LSFE	+PGFP	POSTGRANT: ANNUAL FEES PAID TO NATIONAL OFFICE	COUNTRY OF REF DOCUMENT : BE PAYMENT DATE : 20070514 YEAR OF FEE PAYMENT : 13
EP0670153 A1	20071015	LSAS	REG	REFERENCE TO A NATIONAL CODE	PARTYTYPE : OWNER REF COUNTRY CODE : CH OWNER : MCNEIL-PPC, INC. REF LEGAL EVENT CODE : PFA OLDPARTY : MCNEIL-PPC, INC.#VAN LIEW AVENUE#MILLTOWN NEW JERSEY 08850 (US) -TRANSFER TO- MCNEIL-PPC, INC.#VAN LIEW AVENUE#MILLTOWN NEW JERSEY 08850 (US)
EP0670153 A1	20080331	LSFE	+PGFP	POSTGRANT: ANNUAL FEES PAID TO NATIONAL OFFICE	COUNTRY OF REF DOCUMENT : GR PAYMENT DATE : 20070214 YEAR OF FEE PAYMENT : 13
EP0670153 A1	20080430	LSRE	+PGRI	POSTGRANT: PATENT REINSTATED IN CONTRACTING STATE	COUNTRY OF REF DOCUMENT : IT REINSTATED DATE : 20080301
EP0670153 A1	20080915	LSLE	REG	REFERENCE TO A NATIONAL CODE	REF COUNTRY CODE : PT REF LEGAL EVENT CODE : MM4A TEXT : LAPSE DUE TO NON-PAYMENT OF FEES EFFECTIVE DATE : 20080901
EP0670153 A1	20080930	LSLE	-BERE	BE: LAPSED	PARTYTYPE : OWNER REF COUNTRY CODE : EP OWNER : *MCNEIL-PPC INC. EFFECTIVE DATE : 20080331
EP0670153 A1	20081031	LSLE	-PG25	LAPSED IN A CONTRACTING STATE ANNOUNCED VIA POSTGRANT INFORM. FROM NAT. OFFICE TO EPO	COUNTRY OF REF DOCUMENT : MC NOTIFICATIONOFLAPSE : LAPSE BECAUSE OF NON-PAYMENT OF DUE FEES LAPSED DATE : 20080331
EP0670153 A1	20081031	LSLE	-PG25	LAPSED IN A CONTRACTING STATE ANNOUNCED VIA POSTGRANT INFORM. FROM NAT. OFFICE TO EPO	COUNTRY OF REF DOCUMENT : PT NOTIFICATIONOFLAPSE : LAPSE BECAUSE OF NON-PAYMENT OF DUE FEES LAPSED DATE : 20080901
EP0670153 A1	20081031	LSLE	REG	REFERENCE TO A NATIONAL CODE	REF COUNTRY CODE : CH REF LEGAL EVENT CODE : PL
EP0670153 A1	20081103	LSLE	REG	REFERENCE TO A NATIONAL CODE	REF COUNTRY CODE : DK REF LEGAL EVENT CODE : EBP
EP0670153 A1	20081125	LSLE	-EUG	SE: EUROPEAN PATENT HAS LAPSED	REF COUNTRY CODE : EP
EP0670153 A1	20081128	LSLE	-PG25	LAPSED IN A CONTRACTING STATE ANNOUNCED VIA POSTGRANT INFORM. FROM NAT. OFFICE TO EPO	COUNTRY OF REF DOCUMENT : NL NOTIFICATIONOFLAPSE : LAPSE BECAUSE OF NON-PAYMENT OF DUE FEES LAPSED DATE : 20081001
EP0670153 A1	20081201	LSLE	-NLV4	NL: LAPSED OR ANULLED DUE TO NON-PAYMENT OF THE ANNUAL FEE	REF COUNTRY CODE : EP EFFECTIVE DATE : 20081001
EP0670153 A1	20081224	LSLE	REG	REFERENCE TO A NATIONAL CODE	REF COUNTRY CODE : IE REF LEGAL EVENT CODE : MM4A

EP0670153 A1	20090130	LSLE	-PG25	LAPSED IN A CONTRACTING STATE ANNOUNCED VIA POSTGRANT INFORM. FROM NAT. OFFICE TO EPO	COUNTRY OF REF DOCUMENT : CH NOTIFICATIONOFLAPSE : LAPSE BECAUSE OF NON-PAYMENT OF DUE FEES LAPSED DATE : 20080331
EP0670153 A1	20090130	LSLE	-PG25	LAPSED IN A CONTRACTING STATE ANNOUNCED VIA POSTGRANT INFORM. FROM NAT. OFFICE TO EPO	COUNTRY OF REF DOCUMENT : IE NOTIFICATIONOFLAPSE : LAPSE BECAUSE OF NON-PAYMENT OF DUE FEES LAPSED DATE : 20080303
EP0670153 A1	20090130	LSLE	-PG25	LAPSED IN A CONTRACTING STATE ANNOUNCED VIA POSTGRANT INFORM. FROM NAT. OFFICE TO EPO	COUNTRY OF REF DOCUMENT : LI NOTIFICATIONOFLAPSE : LAPSE BECAUSE OF NON-PAYMENT OF DUE FEES LAPSED DATE : 20080331
EP0670153 A1	20090130	LSLE	-PG25	LAPSED IN A CONTRACTING STATE ANNOUNCED VIA POSTGRANT INFORM. FROM NAT. OFFICE TO EPO	COUNTRY OF REF DOCUMENT : SE NOTIFICATIONOFLAPSE : LAPSE BECAUSE OF NON-PAYMENT OF DUE FEES LAPSED DATE : 20080302
EP0670153 A1	20090227	LSLE	-PG25	LAPSED IN A CONTRACTING STATE ANNOUNCED VIA POSTGRANT INFORM. FROM NAT. OFFICE TO EPO	COUNTRY OF REF DOCUMENT : BE NOTIFICATIONOFLAPSE : LAPSE BECAUSE OF NON-PAYMENT OF DUE FEES LAPSED DATE : 20080331
EP0670153 A1	20090430	LSLE	-PG25	LAPSED IN A CONTRACTING STATE ANNOUNCED VIA POSTGRANT INFORM. FROM NAT. OFFICE TO EPO	COUNTRY OF REF DOCUMENT : DK NOTIFICATIONOFLAPSE : LAPSE BECAUSE OF NON-PAYMENT OF DUE FEES LAPSED DATE : 20080331
EP0670153 A1	20090630	LSLE	-PG25	LAPSED IN A CONTRACTING STATE ANNOUNCED VIA POSTGRANT INFORM. FROM NAT. OFFICE TO EPO	COUNTRY OF REF DOCUMENT : GR NOTIFICATIONOFLAPSE : LAPSE BECAUSE OF NON-PAYMENT OF DUE FEES LAPSED DATE : 20081002
EP0670153 A1	20100630	LSLE	-PG25	LAPSED IN A CONTRACTING STATE ANNOUNCED VIA POSTGRANT INFORM. FROM NAT. OFFICE TO EPO	COUNTRY OF REF DOCUMENT : LU NOTIFICATIONOFLAPSE : LAPSE BECAUSE OF NON-PAYMENT OF DUE FEES LAPSED DATE : 20080301
EP0670153 A1	20140530	LSFE	+PGFP	POSTGRANT: ANNUAL FEES PAID TO NATIONAL OFFICE	COUNTRY OF REF DOCUMENT : ES PAYMENT DATE : 20140211 YEAR OF FEE PAYMENT : 20
EP0670153 A1	20140530	LSFE	+PGFP	POSTGRANT: ANNUAL FEES PAID TO NATIONAL OFFICE	COUNTRY OF REF DOCUMENT : IT PAYMENT DATE : 20140311 YEAR OF FEE PAYMENT : 20
EP0670153 A1	20140530	LSFE	+PGFP	POSTGRANT: ANNUAL FEES PAID TO NATIONAL OFFICE	COUNTRY OF REF DOCUMENT : AT PAYMENT DATE : 20140226 YEAR OF FEE PAYMENT : 20
EP0670153 A1	20140530	LSFE	+PGFP	POSTGRANT: ANNUAL FEES PAID TO NATIONAL OFFICE	COUNTRY OF REF DOCUMENT : FR PAYMENT DATE : 20140311 YEAR OF FEE PAYMENT : 20
EP0670153 A1	20140630	LSFE	+PGFP	POSTGRANT: ANNUAL FEES PAID TO NATIONAL OFFICE	COUNTRY OF REF DOCUMENT : GB PAYMENT DATE : 20140226 YEAR OF FEE PAYMENT : 20
EP0670153 A1	20140829	LSFE	+PGFP	POSTGRANT: ANNUAL FEES PAID TO NATIONAL OFFICE	COUNTRY OF REF DOCUMENT : DE PAYMENT DATE : 20140417 YEAR OF FEE PAYMENT : 20
EP0670153 A1	20150302	LSLE	REG	REFERENCE TO A NATIONAL CODE	REF COUNTRY CODE : DE REF LEGAL EVENT CODE : R071 REF DOCUMENT NUMBER : 69506751 COUNTRY OF REF DOCUMENT : DE
EP0670153 A1	20150325	LSLE	REG	REFERENCE TO A NATIONAL CODE	REF COUNTRY CODE : GB REF LEGAL EVENT CODE : PE20 EXPIRY DATE : 20150228
EP0670153 A1	20150415	LSLE	REG	REFERENCE TO A NATIONAL CODE	REF COUNTRY CODE : AT REF LEGAL EVENT CODE : MK07 REF DOCUMENT NUMBER : 174781 COUNTRY OF REF DOCUMENT : AT

					KIND CODE OF REF DOCUMENT : T DESIGNATED STATE(S) : EFFECTIVE DATE : 20150301
EP0670153 A1	20150526	LSLE	REG	REFERENCE TO A NATIONAL CODE	REF COUNTRY CODE : ES REF LEGAL EVENT CODE : FD2A EFFECTIVE DATE : 20150526
EP0670153 A1	20150529	LSLE	-PG25	LAPSED IN A CONTRACTING STATE ANNOUNCED VIA POSTGRANT INFORM. FROM NAT. OFFICE TO EPO	COUNTRY OF REF DOCUMENT : GB NOTIFICATIONOFLAPSE : LAPSE BECAUSE OF EXPIRATION OF PROTECTION LAPSED DATE : 20150228
EP0670153 A1	20150731	LSLE	-PG25	LAPSED IN A CONTRACTING STATE ANNOUNCED VIA POSTGRANT INFORM. FROM NAT. OFFICE TO EPO	COUNTRY OF REF DOCUMENT : ES NOTIFICATIONOFLAPSE : LAPSE BECAUSE OF EXPIRATION OF PROTECTION LAPSED DATE : 20150302
EP0670153 B1	19981223	LSGT	+	granted / extensions (spc, cpc, pte)	
EP0670153 B1	20150228	PEXP		Calculated Patent Term Expiry	
EP0670153 B1	20150301	PEXP		Calculated Patent Term Expiry	
ES2125502 T3	19990301	LSGT	+	granted / extensions (spc, cpc, pte)	
ES2125502 T3	19990301	LSGT	+FG2A	DEFINITIVE PROTECTION	REF DOCUMENT NUMBER : 670153 COUNTRY OF REF DOCUMENT : ES
ES2125502 T3	20150301	PEXP		Calculated Patent Term Expiry	
GR3029429 T3	19990528	LSGT	+	granted / extensions (spc, cpc, pte)	
GR3029429 T3	20190217	PEXP		Calculated Patent Term Expiry	
HK1012546 A1	20000505	LSGT	+	granted / extensions (spc, cpc, pte)	
HK1012546 A1	20041215	LSFE	+PF	PATENT IN FORCE	
HK1012546 A1	20081010	LSLE	-PC	PATENT CEASED (I.E. PATENT HAS LAPSED DUE TO THE FAILURE TO PAY THE RENEWAL FEE)	EFFECTIVE DATE : 20080301
HK1012546 A1	20181218	PEXP		Calculated Patent Term Expiry	
JP7313548 A2	19951205	LSPB	+	published / reissued	
JP7313548 A2	20040316	LSES	-A131	NOTIFICATION OF REASONS FOR REFUSAL	TEXT : JAPANESE INTERMEDIATE CODE: A131 EFFECTIVE DATE : 20040316
JP7313548 A2	20050614	LSRV	-A02	DECISION OF REFUSAL	TEXT : JAPANESE INTERMEDIATE CODE: A02 EFFECTIVE DATE : 20050614
NZ270582 A	19970224	LSPB	+	published / reissued	
NZ270582 A	20020328	LSFE	+RENW	RENEWAL (RENEWAL FEES ACCEPTED)	
NZ270582 A	20050324	LSFE	+RENW	RENEWAL (RENEWAL FEES ACCEPTED)	
PH31502 A	19981103	LSGT	+	granted / extensions (spc, cpc, pte)	
PH31502 A	20151103	PEXP		Calculated Patent Term Expiry	
SG24091 A1	19960210	LSPB	+	published / reissued	
SI0670153 T1	19991231	LSGT	+	granted / extensions (spc, cpc, pte)	
SI0670153 T1	20081231	LSLE	-KO00	LAPSE OF PATENT	EFFECTIVE DATE : 20081112
SI0670153 T1	20150301	PEXP		Calculated Patent	

				Term Expiry	
TH24920 A	19970429	LSPB	+	published / reissued	
TW276989 B	19960601	LSGT	+	granted / extensions (spc, cpc, pte)	
TW276989 B	20150501	PEXP		Calculated Patent Term Expiry	
US5562793 A	19961008	LSGT	+	granted / extensions (spc, cpc, pte)	
US5562793 A	19960927	LSGT	PAT1	Patented Case	
US5562793 A	20000314	LSFE	+FPAY	FEE PAYMENT	YEAR OF FEE PAYMENT : 4
US5562793 A	20040401	LSFE	+FPAY	FEE PAYMENT	YEAR OF FEE PAYMENT : 8
US5562793 A	20080325	LSFE	+FPAY	FEE PAYMENT	YEAR OF FEE PAYMENT : 12
US5562793 A	20150526	PEXP		Calculated Patent Term Expiry	