(12) INTERNATIONAL APPLICATION PUBLISHED UNDER THE PATENT COOPERATION TREATY (PCT)

(19) World Intellectual Property Organization
International Bureau

(43) International Publication Date
12 October 2017 (12.10.2017)

WIPO | PCT

(10) International Publication Number
WO 2017/176285 A1

(51) International Patent Classification:
B60P 3/00 (2006.01) *B62D 63/06* (2006.01)
B60P 1/48 (2006.01)

(21) International Application Number:
PCT/US2016/026673

(22) International Filing Date:
8 April 2016 (08.04.2016)

(25) Filing Language: English

(26) Publication Language: English

(71) Applicant: **FLEXSTEEL PIPELINE TECHNOLOGIES, INC.** [US/US]; 1201 Louisiana Street, Suite 2700, Houston, TX 77002 (US).

(72) Inventors: **WHITE, Christopher**; C/o Flexsteel Pipeline Technologies, Inc., One Allen Center, 500 Dallas, Suite 500, Houston, TX 77002 (US). **HELBING, Kyle**; c/o Flexsteel Pipeline Technologies, Inc., One Allen Center, 500 Dallas, Suite 500, Houston, TX 77002 (US). **WINN, Alexander, Lee**; c/o Flexsteel Pipeline Technologies, Inc., One Allen Center, 500 Dallas, Suite 500, Houston, TX 77002 (US).

(74) Agents: **CHRETIEN, Mark G.** et al.; Greenberg Traurig, LLP, 1000 Louisiana Street, Suite 1700, Houston, TX 77002 (US).

(81) Designated States *(unless otherwise indicated, for every kind of national protection available)*: AE, AG, AL, AM, AO, AT, AU, AZ, BA, BB, BG, BH, BN, BR, BW, BY, BZ, CA, CH, CL, CN, CO, CR, CU, CZ, DE, DK, DM, DO, DZ, EC, EE, EG, ES, FI, GB, GD, GE, GH, GM, GT, HN, HR, HU, ID, IL, IN, IR, IS, JP, KE, KG, KN, KP, KR, KZ, LA, LC, LK, LR, LS, LU, LY, MA, MD, ME, MG, MK, MN, MW, MX, MY, MZ, NA, NG, NI, NO, NZ, OM, PA, PE, PG, PH, PL, PT, QA, RO, RS, RU, RW, SA, SC, SD, SE, SG, SK, SL, SM, ST, SV, SY, TH, TJ, TM, TN, TR, TT, TZ, UA, UG, US, UZ, VC, VN, ZA, ZM, ZW.

(84) Designated States *(unless otherwise indicated, for every kind of regional protection available)*: ARIPO (BW, GH, GM, KE, LR, LS, MW, MZ, NA, RW, SD, SL, ST, SZ, TZ, UG, ZM, ZW), Eurasian (AM, AZ, BY, KG, KZ, RU, TJ, TM), European (AL, AT, BE, BG, CH, CY, CZ, DE, DK, EE, ES, FI, FR, GB, GR, HR, HU, IE, IS, IT, LT, LU, LV, MC, MK, MT, NL, NO, PL, PT, RO, RS, SE, SI, SK, SM, TR), OAPI (BF, BJ, CF, CG, CI, CM, GA, GN, GQ, GW, KM, ML, MR, NE, SN, TD, TG).

[Continued on next page]

(54) Title: PIPE DEPLOYMENT TRAILER

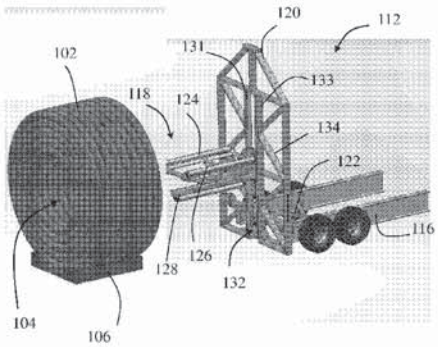

FIG. 2

(57) Abstract: A trailer is provided having a trailer base and a trailer bed mounted to the trailer base. The trailer includes at least one actuator coupled to the trailer bed and the trailer base that raises and lowers the trailer bed. When the at least one actuator is extended, the trailer bed is raised to a vertical orientation. When the at least one actuator is retracted, the trailer bed is in the horizontal orientation. The trailer includes a lifting head protruding outwardly from the trailer bed. The position of the lifting head is adjustable along a longitudinal axis of the trailer bed.

WO 2017/176285 A1

Published:

— *with international search report (Art. 21(3))*