1) Family number: 30043001 (US2003221579A)

© PatBase

Title: CIRCULAR SHAPED CHARGE

Priority: US20020156220 20020528 CA20032429932 20030527

Family:

Publication number	Publication date	Application number	Application date
CA2429932 AA	20031128	CA20032429932	20030527
CA2429932 C	20110412	CA20032429932	20030527
DE60335765 D1	20110303	DE20036035765	20030523
EP1367354 A1	20031203	EP20030253278	20030523
EP1367354 B1	20110119	EP20030253278	20030523
US2003221579 AA	20031204	US20020156220	20020528
US6792866 BB	20040921	US20020156220	20020528

Probable Assignee: HALLIBURTON CO

Assignee(s):(std)**:** GRATTAN TONY F ; HALLIBURTON ENERGY SERV INC

Assignee(s): HALLIBURTON ENERGY SERVICES INC ; HALLIBURTON CO

Inventor(s):(std)**:** GRATTAN TONY F

Agent(s): OGILVY RENAULT LLP SENCRL SRL; CURTIS PHILIP ANTHONY

Designated states: DE FR GB NL

International class (IPC 8-9): E21B29/02 E21B43/117 F42B1/02 F42B1/036 F42B3/00 F42B3/08 F42B3/28 F42B33/00 F42D3/00 (Advanced/Invention);
E21B29/00 F42B1/00 (Core/Invention)

International class (IPC 1-7): E21B29/02 E21B43/117 F42B1/00 F42B1/02 F42B1/028 F42B1/036 F42B3/00 F42B3/08 F42B3/28 F42B33/00 F42D3/00

CPC: E21B29/02 F42B1/02

European class: E21B29/02 F42B1/02

US class: 102/306 102/307 102/310 16/65.5 166/55 175/4.6 175/46

Classification Explorer

Cited documents: US6505559 BA, US6298913 BA, US5524546 A, US5377594 A, US5129322 A, US5046563 A, US4724105 A, US4354433 A, US4306502 A, US4290486 A, US3233688 A, US3057295 A, US3053182 A, US3013491 A, CA2350790 AA,

Forward Citations: WO16007160, WO12040467, WO09146186, US9574416, US9428979, US9360222, US9335132, US9175940, US9175936, US9038713, US9022116, US8770301, US8561683, US8550003, US8547246, US8322449, US8312924, US8302534, US8302523, US8291970, US8272446, US8256521, US8118955, US8056638, US7661367, US7591318, US7416076, US7328750, US2015233219, US2013299194, US2012111217, US2012100763, US2010194588, US2010132578, US2010043661, US2009308613, US2008251170, US2008017379, US2006075888, US2006032562, US2006021748, US2005150781, US10047591, US10047583, EP2619411,

Abstract:
A circular shaped charge and methods of manufacture, shipping and assembly. An circular shaped charge is manufactured as two separate charge halves, upper and lower, and a separate continuous liner or pair of continuous half liners. Preferably, each charge half is formed of a number of segments, each comprising a reduced weight of explosive which can be shipped under preferred regulations. The explosive contains sufficient binder to prevent damage to the charge segments during shipping and assembly at a job site. The separately shipped components are assembled at the job site to form a complete circular shaped charge useful, for example, in a tubing cutter.

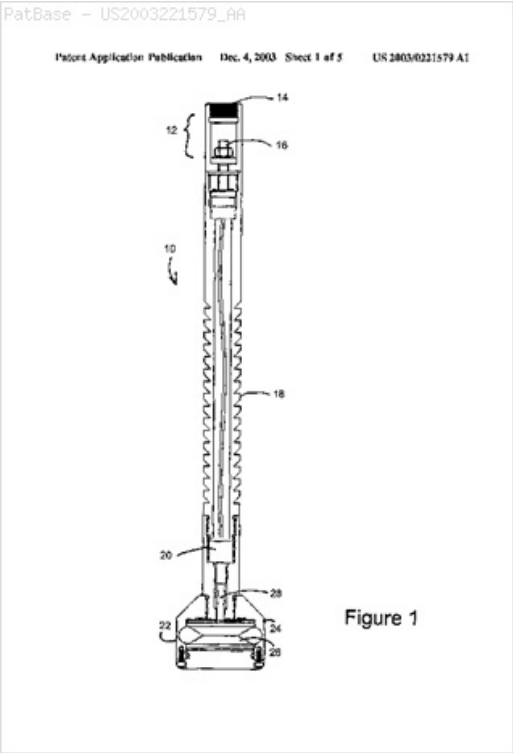

2) Family number: 57414072 (US2016030856A)

© PatBase

Title: DISTILLATION REACTOR MODULE

Priority:

US20130800209P	20130315	US20130801170P	20130315	US20130801491P	20130315
US20140776734	20140318	US20140776736	20140318	WO2014US31118	20140318
WO2014US31116	20140318	US20140776732	20140515	WO2014US38290	20140515

Family:

Publication number	Publication date	Application number	Application date
CA2907677 AA	20150921	CA20142907677	20140318
EP2969180 A2	20160120	EP20140762668	20140318
EP2969180 A4	20161005	EP20140762668	20140318
IL242590 A0	20160131	IL20140242590	20140318
JP2016512165 T2	20160425	JP20160502609T	20140318
US2016030856 AA	20160204	US20140776734	20140318
US2016032904 AA	20160204	US20140776736	20140318
US2016045841 AA	20160218	US20140776732	20140515
WO14146129 A2	20140918	WO2014US31118	20140318
WO14146129 A3	20150129	WO2014US31118	20140318
WO14153570 A2	20140925	WO2014US38290	20140515
WO14153570 A3	20150219	WO2014US38290	20140515
WO14153570 A9	20150806	WO2014US38290	20140515
WO14200605 A2	20141218	WO2014US31116	20140318
WO14200605 A3	20150326	WO2014US31116	20140318
WO14200605 A4	20150430	WO2014US31116	20140318
WO14200605 A9	20150205	WO2014US31116	20140318

Probable Assignee: TRANSTAR GROUP LLC

Assignee(s):(std)**:** BRADLEY RANDALL ; KALPAN ALLEN ; KAPLAN ALLEN ; TRANSTAR GROUP LTD

Assignee(s): TRANSTAR GROUP LLC

Inventor(s):(std)**:** BRADLEY RANDALL ; KALPAN ALLEN ; KAPLAN ALLEN

Agent(s): ADE AND CO INC; NELLIGAN OBRIEN PAYNE LLP; PERRONACE ANDREA; HERSHKOVITZ ABRAHAM ET AL; HERSHKOTIZ ABRAHAM ET AL

Designated states: AE AG AL AM AO AT AU AZ BA BB BE BF BG BH BJ BN BR BW BY BZ CA CF CG CH CI CL CM CN CO CR CU CY CZ DE DK DM DO DZ EC EE EG ES FI FR GA GB GD GE GH GM GN GQ GR GT GW HN HR HU ID IE IL IN IR IS IT JP KE KG KM KN KP KR KZ LA LC LI LK LR LS LT LU LV LY MA MC MD ME MG MK ML MN MR MT MW MX MY MZ NA NE NG NI NL NO NZ OM PA PE PG PH PL PT QA RO RS RU RW SA SC SD SE SG SI SK SL SM SN ST SV SY SZ TD TG TH TJ TM TN TR TT TZ UA UG US UZ VC VN ZA ZM ZW

International class (IPC 8-9): B01D3/00 B01D3/06 B01D3/10 B01D3/26 B01D3/32 B01D39/20 B01D53/48 B01D53/62 B01D59/04 B01J B01J19/24 B01J19/26 B01J2/00 B01J6/00 B01J8/24 B02C23/00 B03C1/00 B22F3/10 B22F9/00 B29B17/00 C01B17/027 C01B17/74 C02F1/00 C10B49/12 C10G1/00 C10G11/18 C10G33/00 C10G45/00 C10G57/00 C10G7/00 C10G7/06 C10G9/04 C10J3/72 C10L9/10 C22B13/00 C22B15/00 C22B21/00 C22B7/00 C22B9/00 F03G7/00 F27B17/00 G21C1/02 G21D5/00 H01M10/54 H01M8/00 H02K55/02 H02K7/09 (Advanced/Invention)

CPC: Y02E30/40 G21D1/00 B01J19/0093 B01J2219/00864 B01J2219/00867 B01J2219/00871 C01G21/02 C01B3/32 C01B13/02 C01B17/02 C01B2203/0205 C01B2203/0283 C01B2203/043 C01B2203/0445 C01B2203/0475 C10G1/02 C10G1/10 C10G31/08 C10G75/04 Y02P20/129 B09B5/00 Y02P30/446 Y02E30/30 B01D3/10 B01D3/006 B01D3/06 B01D39/2027 F03G7/00 B01D3/009 C10G7/06 G21C1/00 G21D5/00 C10G7/00 C10G57/00 C10G7/003 C10L9/10 C10J3/72 C10G1/00 C01B17/027 C01B17/74 B01J6/008 B01J2/00 B01J19/24 B01D53/48 B01D53/62 C22B9/00 F27B17/00 C02F1/00 C22B7/00 B29B17/00 B22F3/10 B22F9/00 C22B21/00 C22B15/00 C22B13/00 H01M8/00 H01M10/54 H02K55/02 H02K7/09 B02C23/00 B03C1/00 C10L2290/544 C10J2300/093 C10J2300/0946 B22F2009/001

C01B17/48 C10G11/18 C10G33/00 C10G45/00 Y02E20/16 Y02E20/18 Y02W10/33 Y02W10/37 Y02W30/84 C01B32/05 C01B32/20 C01B32/50 Y02P10/143

US class: 196/46 202/232 209/213 210/251 241/301 241/65 266/160 310/90.5 422/129 422/170 422/187 422/198 422/255 423/522 423/567.1 429/49 505/163 505/166 60/698

Classification Explorer

Cited documents: WO12100247 A2, WO12085880 A2, WO10077141 A1, WO0003807 A1, US7452515 BA, US7220365 BB, US6325840 BA, US6193194 BA, US5251976 A, US5247548 A, US5139764 A, US5020411 A, US4904347 A, US4018567 A, US3931503 A, US3870507 A, US3850620 A, US3836339 A, US3168807 A, US3052535 A, US2013256113 AA, US2013055699 AA, US2012220509 AA, US2012027156 AA, US2011308158 AA, US2011168541 AA, US2010192980 AA, US2009120842 AA, US2009011291 AA, US2008093302 AA, US2007044659 AA, US2006211899 AA, US2006002829 AA, US2005167333 AA, JP2012229959 A2, EP2510994 A1, EP1249485 A1, CN101376068 A,

Forward Citations: WO18125471, WO18097757, WO18097756, WO18049153, WO18035152, WO18013599, WO17212342, WO17210046, WO17195173, WO17044178, WO17034980, WO16094264, WO16057636, WO15200478, WO15143574, US9964962, US9915477, US9909496, US9901932, US9891004, US9879918, US9869209, US9859477, US9851153, US9845996, US9845995, US9843062, US9840413, US9828885, US9816759, US9816755, US9816401, US9803930, US9803513, US9803511, US9803509, US9803508, US9803507, US9803506, US9803505, US9803145, US9796852, US9790574, US9757667, US9751778, US9745871, US9745867, US9725652, US9719933, US9658044, US9640370, US9636633, US9614743, US9598653, US9588229, US9561463, US9505999, US9487908, US9458597, US9410414, US2017341015, US2017333581, US2017274387, US2017209829, US2017207372, US2017175564, US2017075362, US2017066663, US2017058723, US2017058721, US2017058703, US2017030264, US2017002731, US2016339535, US2016333831, US2016333286, US2016326040, US2016320056, US2016313058, US2016284445, US2016258730, US2016102260, US2016057039, US2015353388, US2015107822, US2015104357, US2015008156, US2014277754, US2014174658, US2013335079, US2012133464, US10174640, US10170960, US10156517, US10138378, US10126067, US10125640, US10125639, US10124695, US10119764, US10118124, US10113805, US10113448, US10100200, US10094219, US10093873, US10082104, US10082045, US10058873, US10016719, US10012448, RU2655161, RU2632837, RU2632293, KR101759327, GB2542051, CN107718877, CN107207976, CN105523598,

Abstract:
The distillation reactor consists of a reactor apparatus with corresponding method of upstream distilling and purification of carbon based liquid or liquidized streams for use as fuels, lubricating oils and or gaseous energy and electricity production. The distillation reactor consolidates the atmospheric and vacuum distillation processes along with desalting, defueling, deasphalting, fractionation, thin/wiped film evaporation and Hydro finishing into an advanced high velocity, high volume single reactor system. Carbon based feed streams include either a single stream or preferably, a combined stream of liquefied coal slurries, crude oils, spent oils, Pyrolyic oils and or peat or other plant carbon derived liquids, vapors, mists or gases. The method further consists of controlling the mix ratio, flow velocity, sequential fractionation and filtration technology and processing atmospheres of the carbon feeds with the reactor apparatus. The combined apparatus and method allows for a refinery to consistently produce a finished barrel of oil well below traditional costs and at a higher efficiency than current art and prior art.

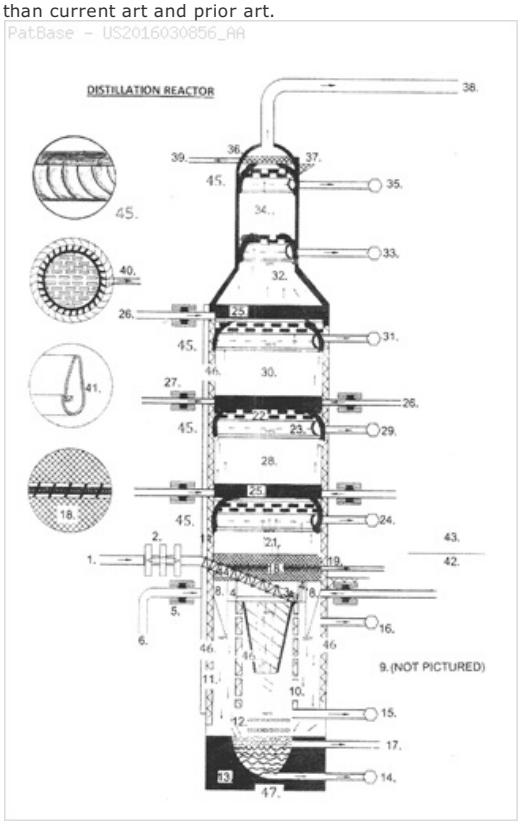

3) Family number: 3304078 (US4893815A) © PatBase

Title: Interactive transector device commercial and military grade

Priority: US19870090036 19870827

Family:

Publication number	Publication date	Application number	Application date
US4893815 A	19900116	US19870090036	19870827

Probable Assignee: ROWAN LARRY

Assignee(s):(std)**:** ROWAN LARRY

Inventor(s):(std)**:** ROWAN LARRY

International class F41B15/04 F41H13/00 F41H9/10 (Advanced/Invention);

(IPC 8-9):	F41B15/00 F41H13/00 F41H9/00 (Core/Invention)
International class (IPC 1-7):	F41B15/04
CPC:	F41B15/04 F41H9/10 F41H13/0018 F41H13/0056 F41H13/0081
European class:	F41B15/04 F41H13/00D2 F41H13/00F2B F41H13/00F8 F41H9/10
US class:	273/84ES 42/1.08 42/1.16 463/47.3 89/1.11

Classification Explorer

Cited documents:	US3545116 A, US3362711 A, US2195711 A,
Forward Citations:	WO08127276, WO0004493, WO0004493, USD564140, US9907137, US9291039, US9228808, US9180550, US9175934, US9010003, US8829808, US8814562, US8689671, US8672759, US8643305, US8610776, US8591126, US8523460, US8438831, US8362712, US8308375, US8161725, US8159146, US8020313, US7955002, US7891298, US7823510, US7750840, US7740371, US7565795, US7393119, US7186000, US7142301, US6876926, US6808287, US6788411, US6711523, US6600442, US6488390, US6417797, US6305818, US6095661, US5837918, US5788178, US5748846, US5503059, US5268963, US5233541, US2016242747, US2013248504, US2013057854, US2011205533, US2011056691, US2011043793, US2010307367, US2010206709, US2010071343, US2009297999, US2009280902, US2009173321, US2009140909, US2008299504, US2008298802, US2008255911, US2008084475, US2007133199, US2006153693, US2005040773, US2005029168, US2004064252, US2004006546, US2003095406, US10117642,

Abstract:
A multiple task user based weapons system capable of neutralizing a variety of designated target types within a real time interval well below conventional systems faced with equivalent tasks. Said weapon system is described as a transector device. Target acquisition, assignment, pursuit and engagement of said targets by dedicated systems embodied within said transector device, including automated projectiles are described in detail. Additionally, the various options or strategies involved in neutralization of said designated targets to the exclusion of equivalent or similar non-designated targets are defined in the disclosure. Further the implementation interactive expert programs, embodying statistical analysis, pruning, probablistic mechanisms and other processes are described in relation to the operation of the aforesaid transector device.

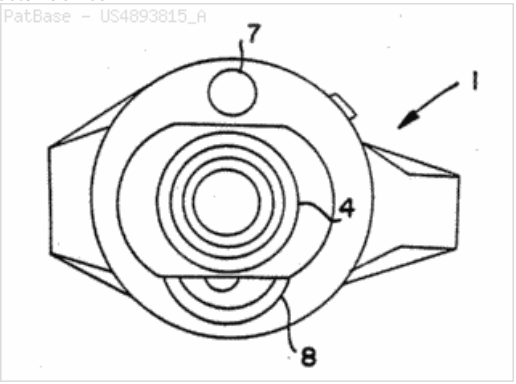

4) Family number: 43589091 (US2009194744A) © PatBase

Title:	METHODS FOR MAKING SCENT SIMULANTS OF CHEMICAL EXPLOSIVES, AND COMPOSITIONS THEREOF
Priority:	US20070935515P 20070814 US20080222738 20080814

Family:

Publication number	Publication date	Application number	Application date
US2009194744 AA	20090806	US20080222738	20080814
US8444881 BB	20130521	US20080222738	20080814

Probable Assignee:	ADEBIMPE DAVID O B A
Assignee(s):(std):	ADEBIMPE DAVID O B A
Assignee(s):	ADEBIMPE DAVID OBA
Inventor(s):(std):	ADEBIMPE DAVID O B A
Inventor(s):	ADEBIMPE DAVID OBA
Agent(s):	DAVID OBA ADEBIMPE POLYMATH INTERSCIENCE LLC
International class (IPC 8-9):	C06B21/00 C09K3/00 G01N31/00 (Advanced/Invention); C09K3/00 (Core/Invention)
CPC:	F41H11/132 C06B23/00 A01K15/02 F42B8/00 F41H11/134
European class:	A01K15/02 C06B23/00
US class:	252/408.1 252/408.100P 422/163

Classification Explorer

Cited documents:	US7932089 BB, US7694628 BB, US5958299 A, US5648636 A, US5585575 A, US5413812 A, US5359936 A, US4987767 A, US4222955 A, US2011168950 AA, US2009199936 AA, US2007255057 AA, US2006037509 AA,
Forward Citations:	WO16058229, US9903694, US9897419, US9890092, US9784723, US9658039, US9656926, US9291436, US9108890, US9091764, US8857340, US8641843, US8563316, US2016341530, US2016161233, US2014311218, US2014166935, US2014097551, US2013026420, US2009199936, US10161730, US10060716, DE102014214401, DE102011081328, CN106278772, CN106248845, CN106248845, CN106083501, CN104657945, CN104657945, CN103245540, CN102875266, CN102875266, CN102816035, CN102816035,

Abstract:
The present invention relates to methods for producing non-detonable and non-explosive parent-odor scent simulants of both detonable and entropy-burst chemical explosive materials. A detonable explosive material is a material that explosives with the aid of detonation while an entropy burst explosive material is a very sensitive energetic material that does not require detonation, but explodes through a spontaneous decomposition of its molecules into gaseous products. The invention also presents representative non-detonable, non-hazardous compositions of such simulants that can be safely and effectively utilized within a broad spectrum of biological and non-biological explosives detection programs, non-limiting examples being the training of biological search-and-detect creatures such as explosive detecting dogs and the calibration of electronic explosive detecting

instruments that rely on the principles of vapor sampling for their operations.

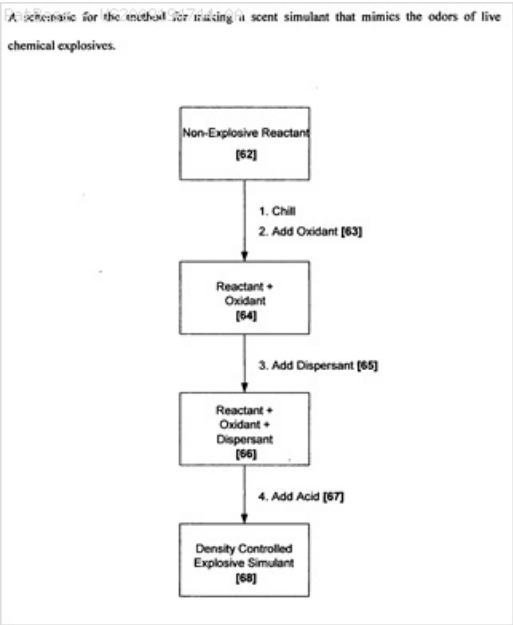

5) Family number: 62228107 (IN02067DE2014A)

© PatBase

Title: A MULTI-LAYER EXPLODING FOIL AND MULTIPLE FLYER BASED SLAPPER DETONATOR

Priority: IN2014DE02067 20140721

Family:

Publication number	Publication date	Application number	Application date
IN02067DE2014 A	20160429	IN2014DE02067	20140721

Probable Assignee: DIRECTOR GENERAL DEFENCE R AND D ORGANISATION

Assignee(s): DIRECTOR GENERAL DEFENCE R AND D ORGANISATION

Inventor(s): BALKISHAN PAL DINESH KUMAR ; GUPTA PUSHPA ; GUPTA SHALLU ; HANUMAN ; KAUR JATINDER ; RAYCHAUDHURI TUSHAR KANTI ; SHARMA SANDEEP ; SINGH MANJIT ; SOOD SUMEDHA

International class (IPC 8-9): F42B3/00 (Advanced/Invention)

Classification Explorer

Abstract:
The invention relates to a multi-layer exploding foil and multi flyer based slapper detonator comprising (a) a squib comprising a multiple layered exploding foil etched on a printed circuit board (PCB) substrate, the foil being capable of vaporizing into plasma generating shock waves on receiving electrical energy; (b) a multiplicity of flyers, disposed spatially proximal to the exploding foil, being configured to be propelled on receiving the shock waves from the exploding foil; (c) a high alumina ceramic barrel on top of the aluminium flyer configured to cause smooth and even cutting of both the flyers on receiving the shock waves from the exploding foil thereby freeing flyers to be propelled; (d) a ceramic holder configured to facilitate assembly of the squib with said multiplicity of flyers and the barrel; (e) a HNS-IV (2, 2', 4,4',6,6' Hexanitrostilbene) explosive pellet, contained in stainless steel tube and placed on the top of the barrel, the explosive pellet being capable of detonation on receiving impact of the propelled flyers; and (f) a nickle enclosure for enclosing and sealing the said exploding foil, flyers, barrel and HNS-IV pellet.

6) Family number: 60956126 (US2017104426A)

© PatBase

Title: ELECTRICAL POWER GENERATION SYSTEMS AND METHODS REGARDING SAME

Priority:

US20030469913	20030905	US20040494571	20040506	US20140004883P	20140529
US20140012193P	20140613	US20140016540P	20140624	US20140021699P	20140707
US20140023586P	20140711	US20140026698P	20140720	US20140037152P	20140814
US20140041026P	20140822	US20140058844P	20141002	US20140068592P	20141024
US20140083029P	20141121	US20140083029P	20141124	US20140087234P	20141204
US20140092230P	20141215	US20150113211P	20150206	US20150141079P	20150331
US20150149501P	20150417	US20150159230P	20150509	US20150165340P	20150522
WO2015US33165	20150529	US20150314196	20150529	US20150172169P	20150607
US20150173911P	20150610	US20150182421P	20150619	US20150191204P	20150710
US20150196751P	20150724	US20150200672P	20150804	US20150208205P	20150821
US20150217411P	20150911	US20150220582P	20150918	US20150237375P	20151005
US20150254104P	20151111	US20150257617P	20151119	US20150263395P	20151204
US20150268963P	20151217	WO2016US12620	20160108	US20160572898	20160108

Family:

Publication number	Publication date	Application number	Application date
AU2015266760 AA	20151203	AU20150266760	20150529
AU2016260177 AA	20161117	AU20160260177	20160108
BR112016027844 A2	20170822	BR20161127844	20150529
BR112017024055 A2	20180724	BR20171124055	20160108
CA2948640 AA	20161109	CA20152948640	20150529
CA2985328 AA	20171107	CA20162985328	20160108
CN107077893 A	20170818	CN201580040818	20150529
CN107710331 A	20180216	CN201680037525	20160108
EA201692463 A1	20171031	EA20160092463	20150529

EA201792477 A1	20180629	EA20170092477	20160108
EP3149745 A1	20170405	EP20150731756	20150529
EP3295460 A1	20180321	EP20160793102	20160108
HK1242041 A1	20180615	HK20180101182	20180125
HK1250837 A1	20190111	HK20180110223	20180809
ID201800544 A	20180119	ID2016P0008044	20150529
ID201806392 A	20180629	ID2017PID08669	20160108
IL249224 A0	20170228	IL20150249224	20150529
IL255495 A0	20180131	IL20160255495	20160108
IN201617040352 A	20170331	IN201617040352	20161125
IN201717042676 A	20180316	IN201717042676	20171128
JP2017527091 T2	20170914	JP20170515023T	20150529
JP2018524557 T2	20180830	JP20170558527T	20160108
KR20170013357 A	20170206	KR20167037020	20150529
KR20180016397 A	20180214	KR20177035406	20160108
MX2016015386 A1	20180126	MX20160015386	20150529
MX2017014305 A1	20180815	MX20170014305	20160108
SG11201609924R A1	20161229	SG20161109924	20150529
TW201601444 A	20160101	TW20150117578	20150529
TW201712691 A	20170401	TW20160100629	20160108
US2017104426 AA	20170413	US20150314196	20150529
US2018159459 AA	20180607	US20160572898	20160108
WO15184252 A1	20151203	WO2015US33165	20150529
WO15184252 A9	20160324	WO2015US33165	20150529
WO16182600 A1	20161117	WO2015US65826	20151215
WO16182605 A1	20161117	WO2016US12620	20160108
ZA201707925 A	20181128	ZA20170007925	20171122

Probable Assignee: BRILLIANT LIGHT POWER INC

Assignee(s):(std)**:** BLACKLIGHT POWER INC ; BRILLIANT LIGHT POWER INC ; MILLS RANDELL LEE

Assignee(s): MILLS RANDELL L

Inventor(s):(std)**:** RANDELL L MILLS ; RANDELL LEE MILLS ; MILLS RANDELL L ; MILLS RANDELL LEE

Agent(s): SPRUSON AND FERGUSON; RIDOUT AND MAYBEE LLP; UEXKUELL AND STOLBERG; SANYOU INT INTELLECTUAL PROPERTY AGENCY HONG KONG LTD; ADOLF MARTUA PANGGABEAN MAROLITA SETIATI; MAROLITA SETIATI; SWEET MARK D

Designated states: AE AG AL AM AO AT AU AZ BA BB BE BF BG BH BJ BN BR BW BY BZ CA CF CG CH CI CL CM CN CO CR CU CY CZ DE DK DM DO DZ EC EE EG ES FI FR GA GB GD GE GH GM GN GQ GR GT GW HN HR HU ID IE IL IN IR IS IT JP KE KG KM KN KP KR KZ LA LC LI LK LR LS LT LU LV LY MA MC MD ME MG MK ML MN MR MT MW MX MY MZ NA NE NG NI NL NO NZ OM PA PE PG PH PL PT QA RO RS RU RW SA SC SD SE SG SI SK SL SM SN ST SV SY SZ TD TG TH TJ TM TN TR TT TZ UA UG US UZ VC VN ZA ZM ZW

International class (IPC 8-9): B22F9/08 C25B1/04 C25B13/04 G21B G21B1/15 G21B1/21 G21B3/00 G21G5/00 G21G7/00 H01L31/0304 H01L31/0725 H01L31/0735 H02N3/00 H02S10/10 H02S10/30 H02S10/40 H02S40/22 H02S40/32 H02S40/38 H02S40/42 H02S40/44 H05H1/24 H05H1/48 (Advanced/Invention); G21B (Subclass/Invention)

CPC: G21B1/15 Y02E30/16 Y02E30/18 H05H2240/00 H02S10/40 H05H1/24 H01L31/0725 H01L31/0735 H02S40/32 H02S40/38 H02S40/22 H02S40/42 C25B1/04 H05H2277/13 H05H1/46 H05H2001/466 Y02E60/366 Y02E70/10 Y02P20/129 Y02P20/134 B22F2009/0888 B22F2009/0896 H01L31/0547 H01L31/0549 H02S10/10 H02S40/425 H02S40/44 H02S10/30 Y02E10/52 Y02E10/544 Y02E10/60 H05H1/48 G21B3/00 C25B13/04

US class: 310/306

Classification Explorer

Cited documents: WO15075566 A1, WO14025443 A2, WO12138576 A1, WO11116236 A2, US6271461 BA, US5556418 A, US4182650 A, US3820767 A, US2011026657 AA, US2009196801 AA, US2009098421 AA, US2008283776 AA, US2004237499 AA, JP4062396 A2, CN103460469 A, CN102906925 B,

Forward Citations: WO18222569, WO18203953, WO17210204, WO17127447, US9910105, US9910104, US9895654, US9853837, US9845153, US9835694, US9835693, US9829545, US9824597, US9823381, US9823314, US9823313, US9817081, US2016214714, US2016151741, US10168393, US10145910, US10126377, US10120039, US10088452, US10088336, US10012704, US10006973, TWI586969, TWI577481,

Abstract:
A solid or liquid fuel to plasma to electricity power source that provides at leas; one of electrical and thermal power comprising (i) at least one reaction cell for the catalysis of atomic hydrogen to form hydrinos, (ii) a chemical feel mixture comprising at least two components chosen from: a source of H2O catalyst or H2O catalyst; a source of atomic hydrogen or atomic hydrogen; reactants to form the source of H2O catalyst or H2O catalyst and a source of atomic hydrogen or atomic hydrogen; one or more reactants to initiate the catalysis of atomic hydrogen; and a material to cause the feel to be highly conductive, (iii) a fuel injection system such as a railgun shot injector, (iv) at least one set of electrodes that confine the fuel and an electrical power source that provides repetitive short bursts of low-voltage, high-current electrical energy to initiate rapid kinetics of the hydrino reaction and an energy gain due to forming hydrinos to torn! a brilliant-light emitting plasma, (v) a product recovery system such as at least one of an augmented plasma railgun recovery system and a gravity recovery system (vi) a fuel pelletizer or shot maker comprising a s me Her. a source or hydrogen and a source of H2O, a dripper and a water bath to form fuel pellets or shot, and an agitator to teed shot into the injector, and (vii) a power converter capable of converting the high-power light output of the cell into electricity such as a concentrated solar power device comprising a plurality of ultraviolet (UV) photoelectric cells or a plurality of photoelectric cells, and a UV window.

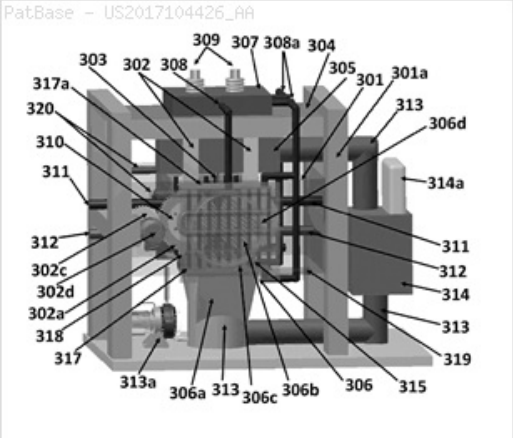

7) Family number: 20386137 (US5413046A)

© PatBase

Title: Shock tube assembly

Priority: US19940212200 19940311 WO1995US02590 19950303

Family:

Publication number	Publication date	Application number	Application date
AU199520929 A1	19950925	AU19950020929	19950303
AU678902 B2	19970612	AU19950020929	19950303
BRPI9507028 A	19971007	BR1995PI07028	19950303
CA2182871 AA	19960807	CA19952182871	19950303
CA2182871 C	19990824	CA19952182871	19950303
CL1994001464 A1	19951117	CL19940001464	19941010
DE69514380 D1	20000210	DE19956014380	19950303
DE69514380 T2	20000608	DE19956014380T	19950303
EP0787113 A1	19970806	EP19950913524	19950303
EP0787113 A4	19970806	EP19950913524	19950303
EP0787113 B1	20000105	EP19950913524	19950303
ES2141927 T3	20000401	ES19950913524T	19950303
MX9603841 A1	19970930	MX19960003841	19960903
NO306019 B1	19990906	NO19960003691	19960904
NO963691 A	19961108	NO19960003691	19960904
NO963691 A0	19960904	NO19960003691	19960904
US5413046 A	19950509	US19940212200	19940311
WO9524365 A1	19950914	WO1995US02590	19950303
ZA9502004 A	19951201	ZA19950002004	19950310

Probable Assignee: DYNO NOBEL INC

Assignee(s):(std)**:** ENSIGN BRICKFORD CO ; ENSIGN BICKFORD CO ; ENSIGN BRICKFORD CO THE

Assignee(s): ENSIGN BICKFORD CO THE ; ENSIGN BICKFORD COMPANY THE ; LUCCA FRANK J ; SOBCZAK BRIAN R ; GLADDEN ERNEST L ; THE ENSIGN BICKFORD COMPANY ; THE ENSIGN BICKFORD CO SIMSBURY ; THOMAS J DONALDSON ; NORDEA BANK NORGE ASA ; NATIONAL AUSTRALIA BANK LTD ; ADAMS CRAIG F ; DYNO NOBEL HOLDING AS ; DYNO NOBEL HOLDINGS USA INC ; DYNO NOBEL INC ; DYNO NOBEL INC SOC ORGANIZADA BAJO LAS LEYES DEL ESTADO DE DELAWARE

Inventor(s):(std)**:** ADAMS CRAIG F ; ADAMS F ; BRIAN R SOBCZAK ; CRAIG F ADAMS ; ERNEST L GLADDEN ; FRANK J LUCCA ; GLADDEN ERNEST L ; GLADDEN L ; J DONALDSON THOMAS ; LUCCA FRANK J ; LUCCA J ; SOBCZAK BRIAN R ; SOBCZAK R ; THOMAS DONALDSON ; THOMAS DONALDSON J ; THOMAS J DONALDSON ; DONALDSON THOMAS J

Inventor(s): DONALDSON J THOMAS ; THOMAS J ; JDONALDSON THOMAS ; BRIAN R SOBXZAK

Agent(s): SPRUSON AND FERGUSON; ASPEN PHARMA PTY LTD; SIM AND MCBURNEY; VILLASECA

Designated states: AT AU BE BR CA CH DE DK ES FR GB GR IE IT LU MC MX NL NO PT SE

International class (IPC 8-9): C06C5/04 C06C5/06 F42D1/04 (Advanced/Invention); C06C5/00 F42D1/00 (Core/Invention)

International class (IPC 1-7): C06C C06C05/04 C06C5/04 F42B39/14

CPC: C06C5/04 C06C5/06 F42D1/04

European class: C06C5/04 C06C5/06 F42D1/04

US class: 102/275.3 102/275.5 102/275.7

Classification Explorer

Cited documents: US746262 A, US746262, US4771694 A, US4757764 A, US4607573 A, US4597594 A, US4328753 A, US3987732 A, US3981240 A, US3774541 A, US3767233 A, US3706277 A, US3590739 A, US3469863 A, US3169480 A, US3057296 A, US1996855 A, GB2200977 A1,

Forward Citations: WO9912872, WO03071220, WO03071220, US9958246, US7699004, US7490554, US6561101, US2010326306, US2008295725, US2008282923, US2008257191, US2008245253, US2008066639, US2008047452, US2005126418, GB2449339, EP1886984,

Abstract:
A signal transmission tube assembly includes a signal transmission tube, such as a coil of shock tube on a spool, having opposite terminal ends and containing a reactive material. The open terminal ends of the shock tube provide the sole exits for the signal generated therein and the sole entry points for contaminants. Sealing means seal both terminal ends of the signal transmission tube against escape from the assembly of the signal engendered by initiated reaction of the reactive material, and protects the interior of the signal transmission tube from contamination. The sealing means may be a releasable sealing means which can be actuated to release the transmission tube from it, thereby facilitating re-use of the sealing means. Further, the sealing means

may comprise a surge chamber to relieve pressure engendered by reaction of the reactive material and thereby militate against rupture of the signal transmission tube and consequent release from the assembly of a signal. A signal-rupturable diaphragm may be interposed between the signal transmission tube and the surge chamber.

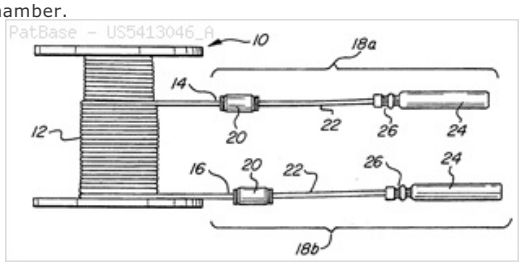

8) Family number: 28203145 (US4566920A)

© PatBase

Title: COMPOSITIONS OF THE EXPLOSIVE EMULSION TYPE, PROCESS FOR THEIR MANUFACTURE AND APPLICATION OF THESE COMPOSITIONS

Priority: EP19830870026 19830318

Family:

Publication number	Publication date	Application number	Application date
AT45135 E	19890815	AT19830870026T	19830318
AU198425695 A1	19840920	AU19840025695	19840316
AU563845 B2	19870723	AU19840025695	19840316
DE3380302 D1	19890907	DE19833380302	19830318
EP0123008 A1	19841031	EP19830870026	19830318
EP0123008 B1	19890802	EP19830870026	19830318
JP59232988 A2	19841227	JP19840050148	19840314
US4566920 A	19860128	US19840585554	19840302
ZA8308344 A	19840725	ZA19830008344	19831109

Probable Assignee: PRB NOBEL EXPLOSIFS SOC AN

Assignee(s):(std)**:** LIBOUTON JEAN CLAUDE ; PII AARU BII NOUBERU EKUSUPURO ; PRB NOBEL EXPLOSIFS ; PRB NOBEL EXPLOSIFS SOC AN ; PRB NOBEL EXPLOSIFS SOCIETE AN ; ROY GEORGES ; WATERLOT LUCIEN ; ROY GEORGES VAN

Assignee(s): VAN ROY GEORGES ; PRB NOBEL EXPLOSIFS SOCIETE ANONYME ; PRB NOBEL EXPLOSIFS SOC ANONYME ; PRB NOBEL EXPLOSIFS 12 A BELGIAN CORP ; PII AARU BII NOUBERU EKUSUPUROUSHIFUSU

Inventor(s):(std)**:** GEORGES VAN ROY ; GEORUGU BAN ROI ; JEAN CLAUDE LIBOUTON ; JIYANNKUROODO RIBOTON ; LIBOUTON JEAN CLAUDE ; LUCIEN WATERLOT ; RIYUUSHIYAN UOOTAAROTSUTO ; ROY GEORGES VAN ; VAN ROY GEORGES ; WATERLOT LUCIEN

Agent(s): CALLINANS; FISHER ADAMS KELLY CALLINANS; SPRUSON AND FERGUSON

Designated states: AT BE CH DE FR GB IT LI LU NL SE

International class (IPC 8-9): C06B21/00 C06B23/00 C06B47/14 (Advanced/Invention); C06B21/00 C06B23/00 C06B47/00 (Core/Invention)

International class (IPC 1-7): C06B23/00 C06B23/02 C06B45/02 C06B47/14

CPC: Y10S149/11 Y10S149/112 C06B23/001 C06B21/0033 C06B47/145

European class: C06B21/00C C06B23/00B C06B47/14B

US class: 149/109.6 149/110 149/112 149/2 149/21 149/61 149/76 149/77

Classification Explorer

Cited documents: US4482403 A, US4414044 A, US4398976 A, US4394198 A, US4371408 A, US4357184 A, US4294633 A, US4141767 A, US4110134 A, GB2086363 A1, GB2083805 A1, GB1315197 A, EP0019458 A2, EP0018085 A2, DE2350605 A1,

Forward Citations: WO04020368, US5271779, US4995925, RU2565637, JP60090888, GB2230257, EP0366274, EP0330637, EP0297740, EP0297740, EP0250224, EP0250224, EP0238210, EP0238210, EP0238210, EP0221701, EP0221701, DE3712488,

Abstract:
An explosive composition of the water-in-oil emulsion type includes at least one emulsified gel formed of an oxidizing solution of an inorganic salt dissolved in water and a fuel phase containing a liquid hydrocarbon and an emulsifier in combination with an inert or reactive lighting constituent and, if appropriate, one or more oxidizing salts or metal fuels. Pursuant to the invention the composition additionally contains from 4 percent to 55 percent of inert or semi-inert solids. The explosive composition provides enhanced safety characteristics through detonation velocity reduction and is thus well suited for dangerous atmospheres such as those encountered in coal mines. Additionally, the explosive composition exhibits a nonsticky plastic to semiplastic texture which facilitates cartridging on conventional machinery, all while retaining normal detonation characteristics.

9) Family number: 64050150 (US2016341530A)

© PatBase

Title: EXPLOSIVE DEVICE SIMULATOR

Priority: US20150716800 20150519 US20170601336 20170522

Family:

Publication number	Publication date	Application number	Application date
US2016341530 AA	20161124	US20150716800	20150519
US2017261293 AA	20170914	US20170601336	20170522
US9658039 BB	20170523	US20150716800	20150519
US10161730 BB	20181225	US20170601336	20170522

Probable Assignee: REMINGTON LEE LLC

Assignee(s):(std): HUPP MARK ; REMINGTON LEE LLC

Inventor(s):(std): HUPP MARK

Agent(s): EIP US LLP; PATTERSON AND SHERIDAN LLP

International class (IPC 8-9): C06B43/00 C06B45/00 D03D23/00 D03D43/00 F42B8/02 F42B8/28 (Advanced/Invention); D03D23/00 D03D43/00 F42B12/20 F42B12/24 (Advanced/Non-invention)

CPC: F42B8/28 C06B43/00 F42B8/02 F42B12/207 F42B12/24

US class: 102/200

Classification Explorer

Cited documents: US9658039 BB, US5648636 A, US5359936 A, US4392432 A, US2012180679 AA, US2009194744 AA, US2007169658 AA, US2004200374 AA, US2003054322 AA,

Forward Citations: US10161730, JP6205086,

Abstract:
Embodiments disclosed herein provide an Explosive Device Simulator (EDS). Embodiments of the Explosive Device Simulator may include two or more chemical components that are non-explosive when separated from each other within the EDS, but which form an explosive mixture or substance when combined. Because the individual chemical components are non-explosive, the Explosive Device Simulator may be stored, transported and handled safely for long periods of time and without increased security, protective measures, or special training. Further, the chemical components may be chosen such that the Explosive Device Simulator creates a realistic explosion (e.g. loud and bright), but which produces minimal concussive forces and is therefore safer to use as a training aid.

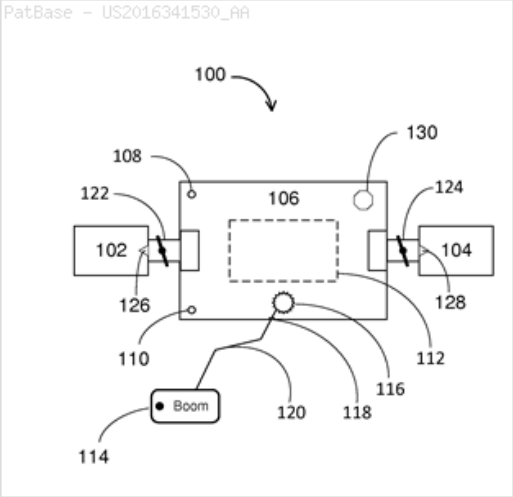

10) Family number: 60169168 (US2015241179A) © PatBase

Title: SIMPLE LOW-COST HAND-HELD LANDMINE NEUTRALIZATION DEVICE

Priority: US20140186162 20140221 US20150867236 20150928 US20160335473 20161027

Family:

Publication number	Publication date	Application number	Application date
US2015241179 AA	20150827	US20140186162	20140221
US2016116259 AA	20160428	US20150867236	20150928
US2017299348 AA	20171019	US20160335473	20161027
US9175933 BB	20151103	US20140186162	20140221
US9506729 BB	20161129	US20150867236	20150928
US9797693 BA	20171024	US20160335473	20161027

Probable Assignee: US ARMY

Assignee(s):(std): ARMY US SEC ; US ARMY

Assignee(s): SECRETARY OF ARMY AS US GOV

Inventor(s):(std): PATEL DIVYAKANT L

Agent(s): RICHARD J

International class (IPC 8-9): B64D1/04 C06B23/00 C06B25/00 C06B25/36 C06B47/00 F16M11/04 F41F5/00 F41H11/12 F42B12/20 F42B3/00 F42B3/10 F42B3/26 (Advanced/Invention)

CPC: F41H11/12 F42B3/10 C06B23/002 C06B25/00 C06B47/00 F16M11/043 C06B25/36 F42B3/00 F42B3/26 F42B12/207 F42B33/067

US class: 1/1 248/124.1 89/1.13

Classification Explorer

Cited documents: WO12034182 A1, US9175933 BB, US7331268 BA, US7176366 BA, US6960267 BA, US6691622 BB, US6679176 BA, US6546838 BB, US6484617 BA, US6453788 BA, US6405627 BA, US6298763 BA, US6235132 BA, US6232519 BA, US6112633 A, US6007648 A, US5970841 A, US5936184 A, US5929363 A, US5648636 A, US5490599 A, US5476241 A, US5226986 A, US5140908 A, US5140891 A, US5139220 A, US5099763 A, US5014623 A, US4967636 A, US4892597 A, US4823672 A, US4822433 A, US4671478 A, US4493239 A, US4315784 A, US4253889 A, US4076562 A, US4046055 A, US3980510 A, US3926119 A, US3915768 A, US3832950 A, US3794534 A, US3724319 A, US3722410 A, US3718512 A, US3637445 A, US3630281 A, US3454438 A, US3338165 A, US3309251 A, US3239395 A, US3133844 A, US2925038 A, US2775571 A, US2656355 A, US2449040 A, US2261788 A, US2186300 A, US2016116259 AA, US2015241179 AA, US2014097307 AA, US2008131350 AA, US1942925 A,

Forward Citations: WO18031430, USD761375, US9989344, US9879965, US9506729, US2016146587, US2016116259, US10093591, US10081579, DE102017108833,

Abstract:
A low-cost, reliable and easy to use kit for neutralizing surface exposed landmine and unexploded ordnance for humanitarian demining is provided. The kit contains a liquid fuel and a solid/soluble fuel. Both fuels are premeasured in separate, sealed containers. The addition of a small quantity of solid/soluble fuel into the liquid creates an explosive. The resulting mixture is

capable of detonating with a standard No. 8 blasting cap. The solid/soluble fuel can be in the form of a powder, tablet, or its saturated solution in water. The solid/soluble fuel is hexamethylenetetramine. The liquid fuel, nitromethane, is provided in premeasured quantities. User is provided instructions for choosing the appropriate quantity of liquid fuel, the corresponding solid/soluble fuel required, the method of mixing, placement and detonation of the kits. Also disclosed is a simple wooden stand to hold the bottle of explosive in place. A special fuel, liquid 2-ethylhexylnitrate, is provided to desensitize the mixed and sensitized explosive.

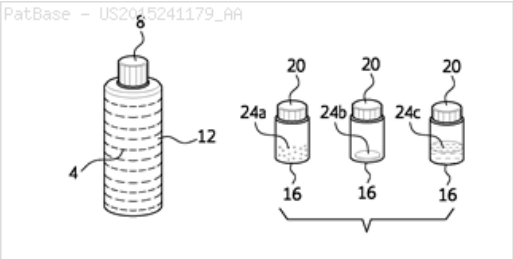

11) Family number: 42001176 (US2009301601A)

© PatBase

Title: APPARATUS AND METHOD FOR USING TETRAZINE-BASED ENERGETIC MATERIAL

Priority: US20060773382P 20060213 US20060855987P 20061101 US20060859058P 20061115 WO2007US03971 20070213 US20070279005 20070213

Family:

Publication number	Publication date	Application number	Application date
AU2007339414 AA	20080710	AU20070339414	20070213
CA2642760 AA	20080813	CA20072642760	20070213
EP1993977 A1	20081126	EP20070861234	20070213
EP1993977 A4	20100120	EP20070861234	20070213
JP2009526649 T2	20090723	JP20080555332T	20070213
US2009301601 AA	20091210	US20070279005	20070213
WO08082427 A1	20080710	WO2007US03971	20070213

Probable Assignee: HALKEY ROBERTS CORP

Assignee(s):(std)**:** BATTAT DAVID ; BATTAT EMILE ; ENERSON JON R ; HALKEY ROBERTS CORP ; LUCIUS JOHN D ; MACKAL GLENN ; LUCIUS JOHN H

Inventor(s):(std)**:** BATTAT DAVID ; BATTAT EMILE ; ENERSON JON R ; LUCIUS JOHN D ; LUCIUS JOHN H ; MACKAL GLENN

Inventor(s): JON R ENERSON ; JOHN D LUCIUS ; GLENN MACKAL ; EMILE BATTAT ; DAVID BATTAT

Agent(s): A J PARK; AJ PARK; OGILVY RENAULT LLP SENCRL SRL; SCHMID WOLFGANG ET AL; GRAY ROBINSON ATTN STEFAN V STEIN IP DEPT; STEIN STEFAN V ET AL

Designated states: AE AG AL AM AT AU AZ BA BB BE BF BG BJ BR BW BY BZ CA CF CG CH CI CM CN CO CR CU CY CZ DE DK DM DZ EC EE EG ES FI FR GA GB GD GE GH GM GN GQ GR GT GW HN HR HU ID IE IL IN IS IT JP KE KG KM KN KP KR KZ LA LC LI LK LR LS LT LU LV LY MA MC MD ME MG MK ML MN MR MW MX MY MZ NA NE NG NI NL NO NZ OM PG PH PL PT RO RS RU SC SD SE SG SI SK SL SM SN SV SY SZ TD TG TJ TM TN TR TT TZ UA UG US UZ VC VN ZA ZM ZW

International class (IPC 8-9): A62C13/22 A62C13/62 A62C19/00 A62C39/00 A62C99/00 A62D1/00 A62D1/06 B01J7/00 B60R21/26 B60R21/264 B63C9/08 B65B31/00 C06B45/00 C06B45/10 C06D5/00 C06D5/04 F02B45/00 (Advanced/Invention);
A62C13/00 A62C19/00 A62C99/00 A62D1/00 B01J7/00 B60R21/26 B63C9/00 B65B31/00 C06B45/00 C06D5/00 F02B45/00 (Core/Invention)

CPC: Y02P20/129 C06D5/06 C06B43/00 C06D5/04 Y02T10/16

European class: C06B43/00 C06D5/04 C06D5/06

US class: 102/530 102/530S 123/24.00RS 123/24R 141/38 141/38P 169/12 169/12S 280/741 280/741S

Classification Explorer

Cited documents: US6991254 BB, US6988558 BB, US6988026 BB, US6984275 BA, US6983955 BB, US6983805 BB, US6982013 BA, US6981659 BA, US6840331 BB, US6837517 BB, US6679522 BB, US6676081 BB, US6673728 BA, US6673172 BB, US6672618 BB, US6672220 BB, US6657059 BB, US6588797 BA, US6511094 BB, US6508894 BA, US6179326 BA, US6176950 BA, US6176517 BA, US6173790 BA, US6170868 BA, US6170594 BA, US6017404 A, US6016874 A, US6012737 A, US6012531 A, US6009809 A, US5863068 A, US5862867 A, US5861571 A, US5857627 A, US5856710 A, US5856587 A, US5711574 A, US5711546 A, US5709724 A, US5707075 A, US5597179 A, US5597044 A, US5593180 A, US5592812 A, US5511481 A, US5487561 A, US5486248 A, US5486210 A, US5480181 A, US5387296 A, US5383388 A, US5378018 A, US5378012 A, US5378011 A, US5286054 A, US5277440 A, US5277256 A, US5276433 A, US5275244 A, US5275243 A, US5184846 A, US5183117 A, US5179982 A, US5090482 A, US5089069 A, US5088560 A, US5078422 A, US4991657 A, US4989675 A, US4986366 A, US4982664 A, US4981534 A, US4902036 A, US4899826 A, US4895208 A, US4893680 A, US4890860 A, US4805701 A, US4726426 A, US4719973 A, US4718497 A, US4645009 A, US4643260 A, US4637473 A, US4637472 A, US4633967 A, US4569399 A, US4567948 A, US4499952 A, US4188856 A, US4183409 A, US4132271 A, US4073464 A, US4069873 A, US4062288 A, US4006780 A, US3930541 A, US3741585 A, US2979896 A, US2006011356 AA, US2005016741 AA, US2004016551 AA, US2003019641 AA, US2003006046 AA, US2002101067 AA, JP11166695 A2, GB644073 A, GB2291590 A1, GB2184719 A1,

Forward Citations: WO18132276, WO17057758, WO14110632, USD804653, US9661973, US9634707, US9498590, US9493137, US9259601, US9079561, US8950329, US7921577, US2017125181, US2016013828, US2014174313, US2013333902, US2013228171, US2008060216, US10088398, US10071214, TWI441377, TWI382574, RU2622815, JP6148799, JP2012529937, JP2012527332, JP2012527331, JP2012525872, JP2012525871, EP2510984, EP2444126, EP2444126, CN101884829,

Abstract:
The present invention comprises apparatus and methods employing a gas produced from a tetrazine-based energetic material such as that known as "BTATz" containing 3;6-BtS(1H-1,2,3,4-Tetrazol-5-ylamino)1-,2,4,5-tetrazine 3;6-BtS(1H-1,2,3,4-Tetrazol-5-ylamino)1-,2,4,5-tetrazine or salts thereof. The tetrazinebased energetic material is ignited through the use of a percussion cap, a piezoelectric crystal or a battery-supplied electric spark or by encapsulating it in a container that is then exposed to a burning flame. The gas produced upon ignition is employed a propellant such as to inflate life rafts, life vests, emergency evacuation slides, tires, air bags and other inflatable devices. The gas produced upon ignition is alternatively employed to power an engine and many other applications such as a fire suppressant.

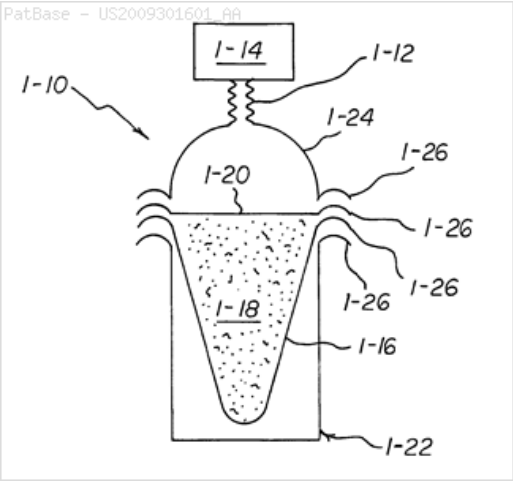

12) Family number: 71793185 (WO18222569A1) © PatBase

Title: MAGNETOHYDRODYNAMIC ELECTRIC POWER GENERATOR

Priority:

US20170457935P 20170212	US20170461768P 20170221	US20170463684P 20170226
US20170481571P 20170404	US20170513284P 20170531	US20170513324P 20170531
US20170524307P 20170623	US20170532986P 20170714	US20170537353P 20170726
US20170545463P 20170814	US20170556941P 20170911	US20170573453P 20171017
US20170584632P 20171110	US20170594511P 20171204	US20170612304P 20171229
US20180618444P 20180117	US20180630755P 20180214	

Family:

Publication number	Publication date	Application number	Application date
TW201841458 A	20181116	TW20180105863	20180221
TW201843686 A	20181216	TW20180105070	20180212
WO18203953 A2	20181108	WO2018US17765	20180212
WO18203953 A3	20181227	WO2018US17765	20180212
WO18222569 A1	20181206	WO2018US34842	20180529

Probable Assignee: BRILLIANT LIGHT POWER INC

Assignee(s):(std)**:** BRILLIANT LIGHT POWER INC

Inventor(s):(std)**:** MILLS RANDELL L

Inventor(s): MILLS RANDELL LEE

Agent(s): SWEET MARK D

Designated states: AE AG AL AM AO AT AU AZ BA BB BE BF BG BH BJ BN BR BW BY BZ CA CF CG CH CI CL CM CN CO CR CU CY CZ DE DJ DK DM DO DZ EC EE EG ES FI FR GA GB GD GE GH GM GN GQ GR GT GW HN HR HU ID IE IL IN IR IS IT JO JP KE KG KH KM KN KP KR KW KZ LA LC LK LR LS LT LU LV LY MA MC MD ME MG MK ML MN MR MT MW MX MY MZ NA NE NG NI NL NO NZ OM PA PE PG PH PL PT QA RO RS RU RW SA SC SD SE SG SI SK SL SM SN ST SV SY SZ TD TG TH TJ TM TN TR TT TZ UA UG US UZ VC VN ZA ZM ZW

International class (IPC 8-9): C01B3/00 G21D7/02 H01M8/06 H01M8/12 H01M8/22 H02K44/08 H02S10/40 (Advanced/Invention)

CPC: C01B3/00 H02S10/40 G21B3/00

Classification Explorer

Cited documents: WO16182605 A1, US2016012620, US2015065826, US2015033165, US2014032584, US2013041938, US2012031369, US2011028889, US2010027828, US2009052072, US2008061455, IB2014058177,

Abstract:
A power generator that provides at least one of electrical and thermal power comprising (i) at least one reaction cell for the catalysis of atomic hydrogen to form hydrinos identifiable by unique analytical and spectroscopic signatures, (ii) a reaction mixture comprising at least two components chosen from: a source of H2O catalyst or H2O catalyst; a source of atomic hydrogen or atomic hydrogen; reactants to form the source of H2O catalyst or H2O catalyst and a source of atomic hydrogen or atomic hydrogen; and a molten metal to cause the reaction mixture to be highly conductive, (iii) a molten metal injection system comprising at least one pump such as an electromagnetic pump that causes a plurality of molten metal streams to intersect, (iv) an ignition system comprising an electrical power source that provides low-voltage, high-current electrical energy to the plurality of intersected molten metal streams to ignite a plasma to initiate rapid kinetics of the hydrino reaction and an energy gain due to forming hydrinos, (v) a source of H2 and O2 supplied to the plasma, (vi) a molten metal recovery system, and (vii) a power converter capable of (a) converting the high-power light output from a blackbody radiator of the cell into electricity using concentrator thermophotovoltaic cells or (b) converting the energetic plasma into electricity using a magnetohydrodynamic converter.

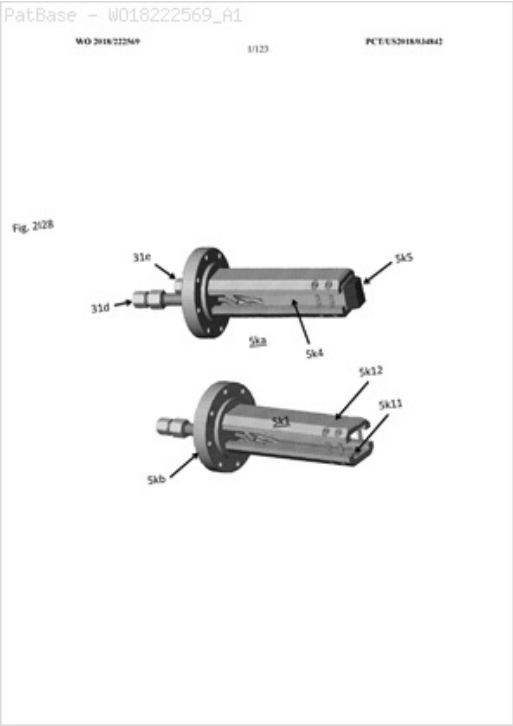

13) Family number: 61871216 (US2017304815A)

© PatBase

Title: ANTIMICROBIAL AND BIOLOGICAL ACTIVE POLYMER COMPOSITES AND RELATED METHODS, MATERIALS AND DEVICES

Priority: US20140047655P 20140909 US20150509834 20150909 WO2015US49255 20150909

Family:

Publication number	Publication date	Application number	Application date
AU2015315108 AA	20160317	AU20150315108	20150909
CA2978065 AA	20170426	CA20152978065	20150909
EP3190881 A1	20170719	EP20150840677	20150909
EP3190881 A4	20180620	EP20150840677	20150909
IN201717012713 A	20170721	IN201717012713	20170408
US2017304815 AA	20171026	US20150509834	20150909
WO16040529 A1	20160317	WO2015US49255	20150909

Probable Assignee: IASIS MOLECULAR SCIENCES

Assignee(s):(std)**:** NORDAL SCOTT ; NORDAL SCOTT FRITHJOF ; WALTERS DANA CHRISTOPHER ; VACHON DAVID JOHN ; VACHON DAVID J ; WALTERS DANA ; VACHON DAVID ; IASIS MOLECULAR SCIENCES

Assignee(s): IASIS MOLECULAR SCIENCES INC

Inventor(s):(std)**:** NORDAL SCOTT FRITHJOF ; VACHON DAVID J ; VACHON DAVID JOHN ; WALTERS DANA CHRISTOPHER

Agent(s): DAVIES COLLISON CAVE PTY LTD; GOWLING WLG CANADA LLP; KELLY DONAL MORGAN; KING JEFFREY J

Designated states: AE AG AL AM AO AT AU AZ BA BB BE BF BG BH BJ BN BR BW BY BZ CA CF CG CH CI CL CM CN CO CR CU CY CZ DE DK DM DO DZ EC EE EG ES FI FR GA GB GD GE GH GM GN GQ GR GT GW HN HR HU ID IE IL IN IR IS IT JP KE KG KM KN KP KR KZ LA LC LI LK LR LS LT LU LV LY MA MC MD ME MG MK ML MN MR MT MW MX MY MZ NA NE NG NI NL NO NZ OM PA PE PG PH PL PT QA RO RS RU RW SA SC SD SE SG SI SK SL SM SN ST SV SY SZ TD TG TH TJ TM TN TR TT TZ UA UG US UZ VC VN ZA ZM ZW

International class (IPC 8-9): A01N25/08 A01N25/10 A01N25/16 A01N33/12 A01N41/04 A01N41/12 A01N43/40 A01N59/00 A01N59/16 A01P1/00 A61H19/00 A61K31/14 A61K31/155 A61K31/616 A61K33/38 A61K47/30 A61K47/58 A61L15/24 A61L15/44 A61L15/46 A61L15/58 A61L26/00 A61L27/18 A61L27/54 A61L29/08 A61L29/16 A61L31/16 B01J39/19 B01J39/20 B01J41/14 B01J45/00 B65D65/40 B65D65/42 C08J3/12 C08J9/36 C08L23/12 C08L57/06 C08L63/00 C08L75/04 C08L83/04 C09D201/00 C09D5/14 C09D5/16 C09D7/65 C09J11/08 C09J183/04 C09J9/00 G01N33/18 G01N33/24 (Advanced/Invention)

CPC: A61L15/46 A61L31/16 A61L2300/102 A61L2300/402 A61L2300/406 A61L2300/41 A61L2300/416 A61L2300/43 B01J45/00 G01N33/24 A01N25/16 A01N33/12 A01N41/04 A01N41/12 A01N43/40 A01N59/00 A01N59/16 A61H19/44 A61K31/14 A61K31/155 A61K31/616 A61K47/585 G01N33/18 C09J183/04 C09J11/08 C09J9/00 C09D201/00 C09D5/1637 C09D5/14 C08L83/04 C08L75/04 C08L63/00 C08L57/06 C08L23/12 C08J9/365 C08J3/12 B65D65/42 B65D65/40 B01J39/20 A61L29/085 A61L27/18 A61L26/0085 A61L26/0066 A61L15/58 A61L15/44 A61L15/24 A61K33/38 A61L2300/104 A61L2300/11 C08J2205/05 G01N2033/245 C08J2325/08 C08J2375/04 C08J2425/02 C08J2425/08 A61L2300/606 C08J2325/02 A01N25/10 A61L27/54 A61L29/16 A61L2300/206 A61L2300/208 A61L2300/404 B01J39/19 B01J41/14

Classification Explorer

Cited documents: WO14100778 A1, US6793875 BA, US5143710 A, US3819560 A, US3645922 A, US2013004586 AA, US2011129646 AA, US2011077144 AA, US2008299220 AA, US2007001037 AA, US2006079421 AA, US2005080157 AA, EP2704239 A1, EP2565256 A1,

Forward Citations: US10093811,

Abstract:
Biologically activated ion-exchange polymer salts are made by exchanging biologically active ionic agents onto ion-exchange polymers. The activated polymers are uniquely surface active and stable to thermal degradation and chemical and other forms of decomposition. The activated ion-exchange polymer salts may be processed and combined with polymer precursors using novel

methods and materials to produce stable, biologically activated polymer composites, including antimicrobial and antifouling polymer composites.

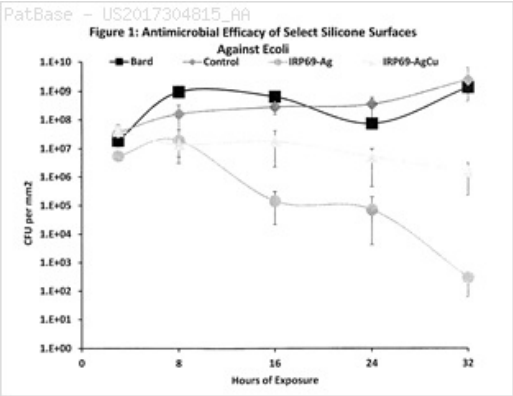

14) Family number: 51596240 (US2013309479A)

© PatBase

Title: POLYESTER YARN AND POLYESTER FABRIC INCLUDING THE SAME

Priority: KR20110005110 20110118 WO2012KR00433 20120118

Family:

Publication number	Publication date	Application number	Application date
CN103354846 A	20131016	CN201280005791	20120118
CN103354846 B	20160810	CN201280005791	20120118
EP2666892 A2	20131127	EP20120737017	20120118
EP2666892 A4	20140611	EP20120737017	20120118
KR20120083776 A	20120726	KR20110005110	20110118
US2013309479 AA	20131121	US20120980111	20120118
WO12099392 A2	20120726	WO2012KR00433	20120118
WO12099392 A3	20121206	WO2012KR00433	20120118

Probable Assignee: KOLON IND INC

Assignee(s):(std)**:** KIM GI WOONG ; KIM YOUNG JO ; KOLON INC ; LEE YOUNG SOO ; LEE SANG MOK

Assignee(s): KOLON IND INC ; KOLON INDUSTRIES INC

Inventor(s):(std)**:** LEE YOUNG SOO ; KIM YOUNG JO ; KIM GI WOONG ; LEE SANG MOK

Agent(s): TER MEER STEINMEISTER AND PARTNER; YOU ME PATENT AND LAW FIRM

Designated states: AE AG AL AM AO AT AU AZ BA BB BE BF BG BH BJ BR BW BY BZ CA CF CG CH CI CL CM CN CO CR CU CY CZ DE DK DM DO DZ EC EE EG ES FI FR GA GB GD GE GH GM GN GQ GR GT GW HN HR HU ID IE IL IN IS IT JP KE KG KM KN KP KZ LA LC LI LK LR LS LT LU LV LY MA MC MD ME MG MK ML MN MR MT MW MX MY MZ NA NE NG NI NL NO NZ OM PE PG PH PL PT QA RO RS RU RW SC SD SE SG SI SK SL SM SN ST SV SY SZ TD TG TH TJ TM TN TR TT TZ UA UG US UZ VC VN ZA ZM ZW

International class (IPC 8-9): B60R21/235 D01F6/62 D02G3/02 D03D1/02 D03D15/00 (Advanced/Invention)

CPC: B60R21/235 D02G3/446 D10B2331/04 D10B2505/124 Y10T428/298 Y10T428/249921 D01F6/62 D02G3/02 D03D1/02 D01D5/098 D01D10/02 D03D15/00 D10B2401/062

European class: D01F6/62 D03D1/02

US class: 428/221 428/401 528/308.1

Classification Explorer

Cited documents: WO10123298 A2, WO10120107 A2, WO09061161 A1, US5637385 A, US5474836 A, US2013273344 AA, US2013224468 AA, US2013187367 AA, US2013090032 AA, US2013040522 AA, US2012043742 AA, US2012040167 AA, US2007243378 AA, US2005064187 AA, KR20100117042 A, KR20100117022 A, KR100779936 B1, KR100497069 B1, KR100492337 B1, JP8013241 A2, JP7090746 A2, JP4214437 A2, JP3076810 A2, JP198813241, EP1845177 A2, CN1664185 A, CN101634052 A, CN101627153 A, CN101469456 A,

Forward Citations: CN107338488, CN103541092,

Abstract:
The present invention relates to a polyester yarn which can be used in a fabric for an airbag. More particularly, the present invention relates to a polyester yarn for an airbag having a modulus of 60 g/d or less in the elongation range of 2.0-3.0 percent, a modulus of 45-70 g/d in the elongation range of 9.0-11.0 percent, and a modulus of 60 g/d or more in the elongation range of 12.0-14 percent, and a fabric for an airbag including the same. When the polyester yarn is used in the fabric for an airbag, it provides excellent packing property, excellent occupant-protection performance upon collision, and gas barrier effect, and also minimizes the impact applied to the occupant, thereby safely protecting the occupant.

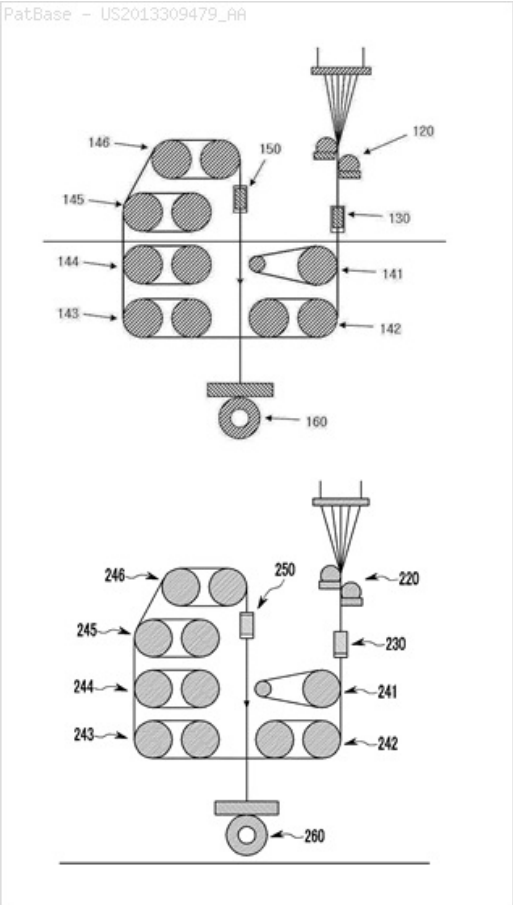

15) Family number: 58695306 (US2016300669A)

© PatBase

Title: ELECTRICAL SWITCHES AND SENSORS

Priority: US20130873019P 20130903 US20140037481 20140904 WO2014US54165 20140904

Family:

Publication number	Publication date	Application number	Application date
US2016300669 AA	20161013	US20140037481	20140904
US10176937 BB	20190108	US20140037481	20140904
WO15035103 A1	20150312	WO2014US54165	20140904

Probable Assignee: VORBECK MAT CORP

Assignee(s):(std)**:** VORBECK MAT ; VORBECK MAT CORP ; VORBECK MATERIALS

Assignee(s): VORBECK MATERIALS CORP

Inventor(s):(std)**:** LETTOW JOHN S ; MCKENNA TERUMI ; MCKENNA TERUMI N ; SCHEFFER DAN ; SCHEFFER DAN F

Agent(s): BOLAR ESQ TRENTICE V; REDMOND KATE

Designated states: AE AG AL AM AO AT AU AZ BA BB BE BF BG BH BJ BN BR BW BY BZ CA CF CG CH CI CL CM CN CO CR CU CY CZ DE DK DM DO DZ EC EE EG ES FI FR GA GB GD GE GH GM GN GQ GR GT GW HN HR HU ID IE IL IN IR IS IT JP KE KG KM KN KP KR KZ LA LC LK LR LS LT LU LV LY MA MC MD ME MG MK ML MN MR MT MW MX MY MZ NA NE NG NI NL NO NZ OM PA PE PG PH PL PT QA RO RS RU RW SA SC SD SE SG SI SK SL SM SN ST SV SY SZ TD TG TH TJ TM TN TR TT TZ UA UG US UZ VC VN ZA ZM ZW

International class (IPC 8-9): H01H1/029 H01H13/00 H01H13/16 H01H3/14 (Advanced/Invention)

CPC: H01H2300/036 H01H1/029 H01H2201/036

US class: 200/265

Classification Explorer

Cited documents: US4790968 A, US4745301 A, US4489302 A, US2012073948 AA, US2011221654 AA, US2011221564 AA, US2011198556 AA, US2011186786 AA, US2011088931 AA, US2011051775 AA,

Abstract:
Electrical switches or sensors that comprise (a) a first electrical pole, (b) a layer of a variable resistance material in electrical contact with the first electrical pole, and (c) a second electrical pole that is in electrical contact with the variable resistance material and is not in electrical contact with the first pole, wherein the variable resistance material comprises at least one polymer having a glass transition temperature of no higher than about 10 degrees centigrade

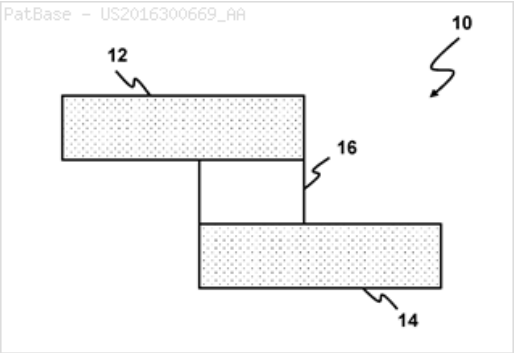

16) Family number: 3145358 (US5052301A)

© PatBase

Title: Electric initiator for blasting caps

Priority: US19900560349 19900730 CA19912048072 19910729

Family:

Publication number	Publication date	Application number	Application date
AU199181435 A1	19920604	AU19910081435	19910729
AU635436 B2	19930318	AU19910081435	19910729
CA2048072 AA	19920131	CA19912048072	19910729
CA2048072 C	19950404	CA19912048072	19910729
EP0469458 A1	19920205	EP19910112462	19910725
MX9100407 A1	19920228	MX19910000407	19910729
US5052301 A	19911001	US19900560349	19900730
ZA9105931 A	19920429	ZA19910005931	19910729

Probable Assignee: WALKER RICHARD E

Assignee(s):(std)**:** WALKER RICHARD E

Assignee(s): RICHARD E WALKER

Inventor(s):(std)**:** RICHARD E WALKER ; WALKER RICHARD E

Agent(s): SPRUSON AND FERGUSON; ASPEN PHARMA PTY LTD; GOWLING LAFLEUR HENDERSON LLP

Designated states: AT BE CH DE DK ES FR GB GR IT LI LU NL SE

International class (IPC 8-9): F42B3/11 F42B3/13 (Advanced/Invention); F42B3/00 (Core/Invention)

International class (IPC 1-7): F42B1/04 F42B3/11 F42B3/13 F42B3/16 F42C11/00 F42C19/12

CPC: F42B3/13

European class: F42B3/13

US class: 102/202.5 102/202.7

Classification Explorer

Cited documents: US4938137 A, US4920404 A, US4907044 A, US4840122 A, US4708060 A, US4447825 A, US4412234 A, US4267559 A, US3510732 A, US3366055 A, US3277824 A, US3264991 A, US3264990 A, US3019732 A,

Forward Citations: WO9323718, WO9323718, WO9218828, WO14168613, WO09154817, WO09154817, WO04107524, WO04107524, US9581419, US8934214, US8196512, US8037822, US7921775, US7921774, US7475775, US7363860, US7071631, US7059471, US6835910, US6708619, US6703578, US6679175, US6553911, US6422145, US6311621, US5969286, US5351623, US5275106, US5173570, US5144893, US2011094405, US2008047449, US2006226041, US2005145519, US2004232847, US2004231546, US2004007911, KR101842431, KR100647049, EP2250459, DE112013006659, CN103424039, CN103424039, CN102865991, CN102865991,

Abstract:
In an electric detonator or blasting cap of the type including a base charge of high explosive material, an initiator means or initiator for creating an abrupt eruption in response to application of a selected voltage across the igniter and means for detonating the base charge upon creation of the abrupt eruption of the initiator, there is provided an improvement comprising forming the initiator as a junction of energetic material, such as a PN junction of an LED chip, encapsulated in a plastic or glass confinement housing. The housing has a directional controlling partition means facing in a selected direction. This partition has an effective spacing from the junction substantially less than the remainder of the confinement housing whereby application of a voltage pulse of over about 500 volts causes the junction to form an electric arc to create a plasma by a confined, high temperature, high pressure exothermic reaction. The effective spacing of the aforementioned partition at the junction is thick enough to confine the exothermic reaction until creation of the plastic and thin enough to allow the plasma to rupture the controlled partition and penetrate through the partition a given distance in the selected direction. The base charge is located in the selected direction and spaced from the partition a distance less than the given distance of plasma penetration whereby the plasma impacts against the base charge, thus, detonating the base charge.

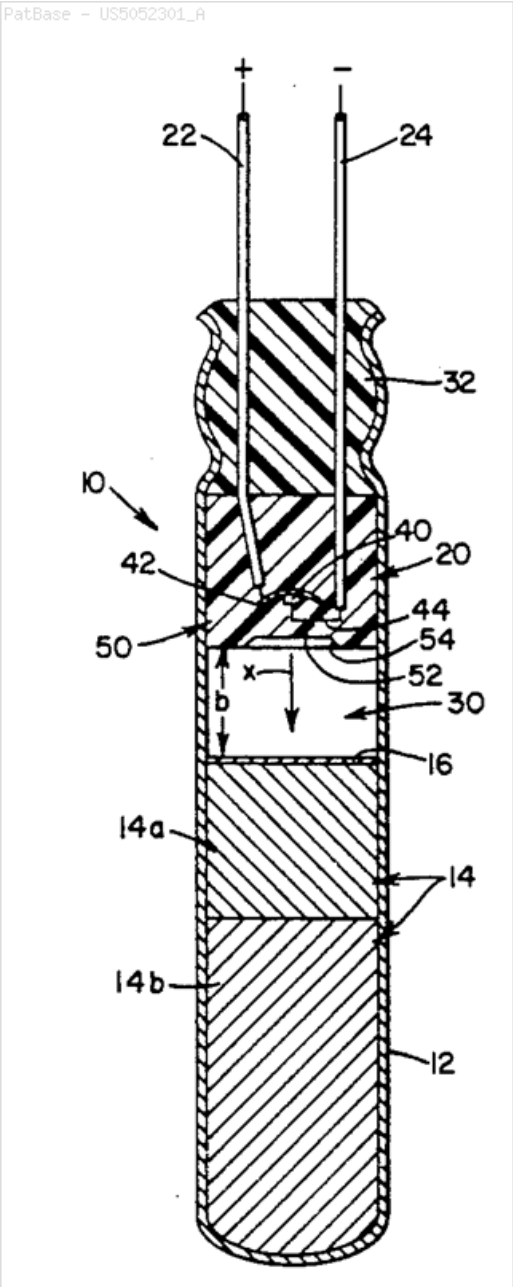

17) Family number: 116404 (US3419443A)

© PatBase

Title: HYDRAZINE CONTAINING EXPLOSIVE COMPOSITIONS

Priority: US19670631123 19670417 US19690805987 19690225

Family:

Publication number	Publication date	Application number	Application date
BE713729 A	19680916		19680416
BE764463 Q	19710816	BE19710764463	19710318
CH542161 A	19730930	CH19680005439	19680410
DE1771176 A1	19711125	DE19681771176	19680416
DE1771176 B2	19761028	DE19681771176	19680416
DE1771176 C3	19770608	DE19671771176	19680416
FR1565794 A	19690502		19680416
GB1212582 A	19701118	GB19680007628	19680216
IL29811 A0	19701130	IL19680029811	19680411
IL29811 A1	19710825	IL19680029811	19680411
US3419443 A	19681231	US19670631123	19670417
US3580171 A	19710525	US19690805987	19690225

Probable Assignee: EXPLOSIVES CORP AMERICA

Assignee(s):(std)**:** EXPLOSIVES CORP AMERICA ; EXPLOSIVES CORP OF AMERICA ISS

Assignee(s): EXPLOSIVES OF AMERICA CORP ; EXPLOSIVES CORP OF AMERICA ISSAQUAH WASH V ST A ; EXPLOSIVES CORP OF AMERICA ; EXPLOSIVES CORP OF AMERICA EXCOA BUILDING ISSAQUAH WASHINGTON E U A ; EXPLOSIVES CORP OF AMERICA EXCOA BUILDING ISSAQUAH WASHINGTON EUA

Inventor(s):(std)**:** E MAES MICHEL ; MAES MICHAEL E ; MAES MICHEL E ; MICHEL E MAES

Inventor(s): MICHAEL E MAES

International class (IPC 8-9):	C06B31/00 C06B47/08 F42B3/00 F42B3/10 (Advanced/Invention); C06B31/00 C06B47/00 F42B3/00 (Core/Invention)
International class (IPC 1-7):	B23P3/09 C06B1/00 C06B11/00 C06B15/00 C06B29/00 C06B31/00 F42B3/00 F42B3/10 F42B3/18
CPC:	C06B31/00 Y10S102/705 C06B47/08 F42B3/00 F42B3/10
European class:	C06B31/00 C06B47/08 F42B3/00 F42B3/10
US class:	102/202.11 102/28 102/315 102/705 149/1 149/36 149/46 149/75
Classification Explorer	
Cited documents:	US425860 A, US3234729 A, US3127835 A, US3116187 A, US3061439 A, US2944385 A, US2943927 A, US2929325 A, US2892377 A, US2509710 A, US2463709 A, US1851122 A,
Forward Citations:	WO15035429, WO15009752, WO14052371, WO10066672, US9835428, US9829287, US9593924, US9488456, US9476685, US9354029, US9181790, US8960093, US6453818, US6405627, US6318272, US6308607, US6228193, US5970841, US5929367, US5761263, US5452661, US5293821, US4946522, US4528049, US4042431, US4006687, US3926119, US3855929, US3832950, US3815501, US3797392, US3774541, US3768411, US3768410, US3719144, US3687076, US3667524, US2016377392, US2004088910, FR2156354, FR2156354, EP0351040, EP0351040,

Abstract:
ABSTRACT OF THE DISCLOSURE Explosive compositions characterized by a nominally liquid condition and a very high detonation velocity, and with low freezing point, low viscosity and low impact sensitivity characteristics, said explosive composition comprising as essential ingredients an at least principally hydrazinium oxidizer salt (e.g., hydrazinium nitrate and mixtures thereof with hydrazinium Perchlorate), hydrazine, and ammonia, and comprising as optional additives various compatible desensitizers, gelling agents, wetting agents, self-sterilizing components, freezing point depressants, low gas producing substituents, and waterproofing agents. Also presented are modes of preparation of the compositions, involving either premix of the ingredients, or mixing thereof in place at the situs of use. Relative proportions by weight of the essential ingredients are as follows: N2H5N03, from about 40% to about 92%; N2H5CIO4, from 0% to about 40%; N2H4, from about 6% to about 15%; and NH3, from about 2% to about 15%. Optionally, minor proportions of the nitrate and Perchlorate salts can be metallic salts. B

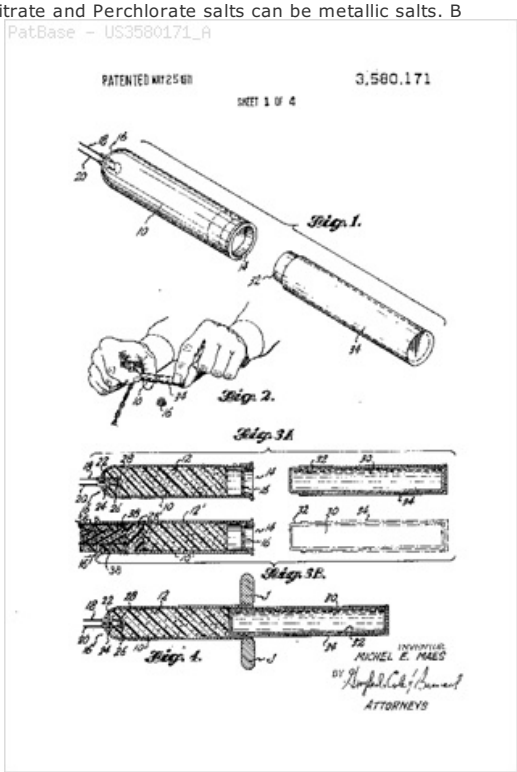

18) Family number: 2845434 (US4875951A)

© PatBase

Title:	Chemical foaming of emulsion explosive compositions
Priority:	GB19880002209 19880202 GB19890000642 19890112 CA19890589830 19890201

Family:

Publication number	Publication date	Application number	Application date
AU198928771 A1	19890803	AU19890028771	19890125
AU609930 B2	19910509	AU19890028771	19890125
CA1319015 A1	19930615	CA19890589830	19890201
CN1036007 A	19891004	CN19891001636	19890202
EP0327205 A1	19890809	EP19890300236	19890112
GB2215328 A1	19890920	GB19890000642	19890112
GB8802209 A0	19880302	GB19880002209	19880202
GB8900642 A0	19890308	GB19890000642	19890112
IE890308 L	19890802	IE19890000308	19890131
JP1226787 A2	19890911	JP19890022739	19890202
MW389 A	19891011	MW19890000003	19890116
MX169850 B	19930728	MX19890014723	19890131
NO890409 A	19890803	NO19890000409	19890201
NO890409 A0	19890201	NO19890000409	19890201
US4875951 A	19891024	US19890305463	19890202
ZA8900391 A	19901228	ZA19890000391	19890117
ZM389 A	19890630	ZM19890000003	19890120

ZW989 A	19891004	ZW19890000009	19890123

Probable Assignee: ORICA EXPLOSIVES TECHNOLOGY PTY LTD

Assignee(s):(std)**:** C I L ; C I L INC E IMPERIAL CHEMICAL ; ICI PLC ; CANADIAN IND ; ICI CANADA ; IMP CHEMICAL IND LTD ; CIL INC

Assignee(s): IMP CHEMICAL IND PLC ; IMPERIAL CHEM IND PLC ; ICI CANADA INC ; ORICA EXPLOSIVES TECHNOLOGY PTY LTD ; ORICA TRADING PTY LTD ; IMPERIAL CHEMICAL INDUSTRIES PLC ; IMPERIAL CHEM IND PLC ICI ; ORICA CANADA INC ; PREST DAVID WILLIAM ; YORKE WILLIAM JOHN ; IMP CHEMICAL IND PLC IMP ; C I L INC E IMPERIAL CHEMICAL INDUSTRIES PLC ; C I L INC ; C I L INC E IMP CHEMICAL

Inventor(s):(std)**:** D W PREST ; DAVID WILLIAM PREST ; DEEBITSUDO UIRIAMU PURESUTO ; PREST D W ; PREST DAVID W ; PREST DAVID WILLIAM ; UIRIAMU JIYON YOOKU ; W J YORKE ; YORK W J ; YORKE DAVID WILLIAM WILLIAM JO ; YORKE W J ; YORKE WILLIAM J ; YORKE WILLIAM JOHN ; WILLIM JOHN YORKE

Inventor(s): WJ YORKE ; WILLIAM JOHN YORKE ; DW PREST ; DAVID WILLIAM WILLIAM JOHN YORKE

Agent(s): PHILLIPS ORMONDE FITZPATRICK; MARKS AND CLERK

Designated states: DE ES FR IT SE

International class (IPC 8-9): C06B23/00 C06B47/14 C09K21/02 (Advanced/Invention); C06B23/00 C06B47/00 C09K21/00 (Core/Invention)

International class (IPC 1-7): C06B23/00 C06B31/00 C06B45/00 C06B45/32 C06B45/36 C06B47/00 C06B47/14 C09K21/02 C10N40/10 D03D23/00

CPC: C06B23/002 C06B47/145

European class: C06B23/00C C06B47/14B

US class: 149/109.6 149/2 149/44 149/60 149/61

Classification Explorer

Cited documents: US4790891 A, US4790890 A, US4756776 A, US4756726 A, US4737207 A, US4711678 A, US4594118 A, US4507161 A, US4409044 A, EP0228354 A1,

Forward Citations: WO08083436, WO08026124, WO08026124, US9347405, US8114231, US6982015, US6800154, US5920030, US5397399, US2012145809, US2011132505, US2009301619, US2006219518, EP0881999, CN102060634,

Abstract:
This invention provides an improved method of foaming a water-in-oil emulsion explosive wherein a gassing agent which is a water-in-oil emulsion containing an aqueous solution of sodium nitrite in its discontinuous phase is mixed with the emulsion explosive. The sodium nitrite reacts with ammonium nitrate in the discontinuous phase of the emulsion explosive to generate small particles of gas which are distributed throughout the explosive. The method improves the gas bubble distribution and enhances the sensitivity of the explosive to blasting cap initiation.

19) Family number: 31767451 (US2005188825A)

© PatBase

Title: EXPLOSIVE EFFECT MITIGATED CONTAINERS

Priority: US20030630897 20030731 WO2004US05916 20040227 US20040834165 20040429 US20050042318 20050126 NZ20060556739 20060126 WO2006US02695 20060126

Family:

Publication number	Publication date	Application number	Application date
AR043586 AA	20050803	AR2004P100822	20040312
AU2004272959 AA	20050324	AU20040272959	20040227
AU2006209218 AA	20060803	AU20060209218	20060126
CA2534204 AA	20060130	CA20042534204	20040227
CA2595845 AA	20070725	CA20062595845	20060126
CN101501441 A	20090805	CN200680009885	20060126
CN1846113 A	20061011	CN200480025628	20040227
EA010812 B1	20081230	EA20060000328	20040227
EA200600328 A1	20061027	EA20060000328	20040227
EP1660839 A2	20060531	EP20040809306	20040227
EP1841670 A2	20071010	EP20060733899	20060126
EP1841670 A4	20110511	EP20060733899	20060126
IL173461 A0	20060611	IL20040173461	20040227
IL184835 A0	20071203	IL20060184835	20060126
IN00696CN2006 A	20070629	IN2006CN00696	20060224
IN03277CN2007 A	20071109	IN2007CN03277	20070725
JP2007500837 T2	20070118	JP20060521808T	20040227
JP2008528928 T2	20080731	JP20070553212T	20060126
KR20060036475 A	20060428	KR20067002171	20040227
KR20070119623 A	20071220	KR20077019570	20070827
NZ545196 A	20090228	NZ20040545196	20040227
NZ556739 A	20100930	NZ20060556739	20060126
US2005188825 AA	20050901	US20040834165	20040429
US2005242093 AA	20051103	US20050042318	20050126
US2007006723 AA	20070111	US20030630897	20030731
US7343843 BB	20080318	US20050042318	20050126
US7520223 BB	20090421	US20040834165	20040429
US8316752 BB	20121127	US20030630897	20030731
WO05026655 A2	20050324	WO2004US05916	20040227
WO05026655 A3	20050623	WO2004US05916	20040227
WO05026655 B1	20050804	WO2004US05916	20040227
WO06081319 A2	20060803	WO2006US02695	20060126
WO06081319 A3	20090423	WO2006US02695	20060126
WO06081319 A9	20081231	WO2006US02695	20060126

Probable Assignee: BLASTGARD TECHNOLOGIES INC

Assignee(s):(std)**:** BLASTGARD INT ; BLASTGARD INTERNAT ; BLASTGARD TECHNOLOGIES INC ; WADDELL JR JOHN L ;

GORDON JAMES F ; SHARPE KEVIN J ; WADDELL JACK ; WADDELL JOHN L JR ; KEVIN J SHARPE ; JACK WADDELL ; JAMES F GORDON ; BLAST GARD INT ; BLAST GARD INTERNAT

Assignee(s): BLAST GARD INTERNATIONAL ; BLASTGARD INTERNATIONAL

Inventor(s):(std)**:** GORDON JAMES F ; GORDON JAMESF ; JAMESF GORDON ; SHARPE KEVIN J ; WADDELL JOHN JR ; WADDELL JACK ; JR JOHN L WADDELL ; SHARPE KEVIN JOHN ; WADDELL JR JOHN L ; WADDELL JOHN L JR ; WADDELL JR JOHN L GORDON JAMES ; WADDELL JOHN L

Inventor(s): GORDON JAMES ; WADDELL JOHN LJR ; SHARPE KEVIN ; KEVIN J SHARPE ; JACK WADDELL ; JAMES F GORDON ; WADDELL JOHN

Agent(s): FB RICE; FB RICE PTY LTD; BORDEN LADNER GERVAIS LLP; BROWDY AND NEIMARK PLLC 624 NINTH STREET NW; BROWDY AND NEIMARK PLLC; BROWDY ROGER L ET AL

Designated states: AE AG AL AM AT AU AZ BA BB BE BF BG BJ BR BW BY BZ CA CF CG CH CI CM CN CO CR CU CY CZ DE DK DM DZ EC EE EG ES FI FR GA GB GD GE GH GM GN GQ GR GW HR HU ID IE IL IN IS IT JP KE KG KM KN KP KR KZ LC LI LK LR LS LT LU LV LY MA MC MD MG MK ML MN MR MW MX MZ NA NE NG NI NL NO NZ OM PG PH PL PT RO RU SC SD SE SG SI SK SL SM SN SY SZ TD TG TJ TM TN TR TT TZ UA UG US UZ VC VN YU ZA ZM ZW

International class (IPC 8-9): B65D88/00 B65D90/32 B65F1/00 B65F1/14 F16F7/00 F41H5/02 F41H5/06 F41H5/24 F42B33/06 F42B39/14 F42B39/24 F42D5/045 F42D5/05 (Advanced/Invention);
F42D5/045 (Advanced/Non-invention);
F16F7/00 F41H5/00 F42D5/00 (Core/Invention);
B65D F42D (Subclass/Invention)

International class (IPC 1-7): B65D88/00 F41H5/02 F42D5/045 G10K11/16

CPC: B65D90/325 B65F1/14 B65F2220/104 F42B39/14 F42D5/05 F42D5/045

European class: B65D90/32A B65F1/14 F42B39/14 F42D5/045 L65F220/104

US class: 102/303 220/62.11 220/62.110P 244/121 86/50 89/36.02 89/36.020P 89/36.04 89/36.040S 89/36.07 89/36.070S 89/36.11

Classification Explorer

Cited documents: WO05026655 A2, US7662468 BB, US7036418 BB, US6961957 BB, US6858280 BB, US6805035 BB, US6782792 BA, US6701529 BA, US6688989 BB, US6644165 BA, US6453477 BA, US6397753 BB, US6341708 BA, US6289816 BA, US6279399 BA, US6244155 BA, US6177368 BA, US6177368 B1, US5996115 A, US5910540 A, US5868353 A, US5849394 A, US5830548 A, US5785779 A, US5783297 A, US5739458 A, US5738925 A, US5729830 A, US5686689 A, US5599082 A, US5595431 A, US5576511 A, US5563364 A, US5534343 A, US5413410 A, US5394789 A, US5394786 A, US5366105 A, US5364679 A, US5340632 A, US5333532 A, US5312182 A, US5309690 A, US5299862 A, US5287961 A, US5267665 A, US5225622 A, US5196254 A, US5156290 A, US5155959 A, US5110661 A, US5076168 A, US5076166 A, US4966365 A, US4864913 A, US4836079 A, US4750318 A, US4716598 A, US4700706 A, US4389947 A, US4369885 A, US4299872 A, US4287250 A, US4251579 A, US4184788 A, US3801416 A, US3795994 A, US3786956 A, US3736838 A, US3625872 A, US3577836 A, US3491847 A, US3371604 A, US3360014 A, US3331322 A, US2974788 A, US2738297 A, US2733177 A, US2602302 A, US2004154463 AA, US2004118272 AA, US2004107827 AA, US2004091181 AA, US2003209133 AA, JP7208899 A2, JP63134300 U1, JP63134300 U, JP2002333300 A2, FR2607241 A1, FR2602038 A1, FR2573511 A1, EP1660839 A2, EP1229298 A1, EP0706596 B1, EP0312399 A1, EP0276918 A1,

Forward Citations: WO16067325, WO13077955, WO13000133, WO12178182, WO11089609, USD578160, US9885543, US9790406, US9709370, US9696120, US9534870, US9470484, US9027810, US8981261, US8879240, US8806945, US8777161, US8740071, US8707847, US8677881, US8628834, US8621973, US8590437, US8573108, US8408114, US8387503, US8382033, US8079465, US8066836, US8039102, US8006622, US7926407, US7866248, US7849780, US7827897, US7752975, US7748307, US7698985, US7670033, US7461453, US2017176158, US2017045335, US2014352568, US2014124074, US2011123355, US2011041679, US2011001009, US2010319522, US2010307327, US2010064720, US2009308235, US2009126860, US2009044693, US2009004430, US2008302059, US2008286553, US2008282874, US2008282545, US2008170404, US2008121151, US2008083342, US2008053843, US2008006146, US2007131684, US10119779, US10072918, US10072917, RU2665750, KR101722240, KR101529518, KR101488702, JP2016519271, JP2016090077, JP2009530575, GB2488347, EP2492217, EP1841670, EP1660839, DE102008049933, CN106767201, CN106494795, CN106090105, CN106090105, CN105738064, CN104048566, CN103363852, CN102939511, CN102939511, CN102589374, CN102589374, CN102519352, CN101844657,

Abstract:
A container, such as a standard aircraft unit load device, a truck trailer, a ship's cargo compartment, or the like, is fitted with a blast mitigating material located within the container. The blast mitigating material can be fitted to the container during manufacture, or an existing container can be retrofitted.

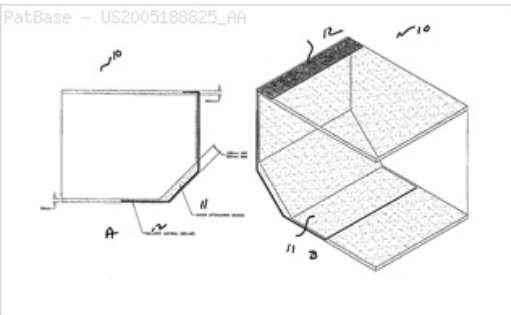

20) Family number: 28323458 (US2002028741A) © PatBase

Title: POLYMERIZATION OF OLEFINS

Priority:

US20000208087P	20000531	US20000211061P	20000615	US20000211601P	20000615
US20000214036P	20000623	US20010264537P	20010125	US20010264537P	20010126
US20010870597	20010531	WO2001US17626	20010531	US20010871100	20010531
US20010870596	20010531	US20010294794P	20010531	US20010871099	20010531
WO2001US17636	20010531	WO2001US17628	20010531	WO2001US17627	20010531
WO2002US03088	20020125	US20020272765	20021017	US20020273049	20021017

Family:

Publication number	Publication date	Application number	Application date
AU2001265260 AA	20011211	AU20010265260	20010531

AU2001266635 AA	20011211	AU20010266635	20010531
AU2001269725 AA	20011211	AU20010269725	20010531
AU200165260 A1	20011211	AU20010065260	20010531
AU200165260 A5	20011211	AU20010065260	20010531
AU200166635 A1	20011211	AU20010066635	20010531
AU200166635 A5	20011211	AU20010066635	20010531
AU200169725 A1	20011211	AU20010069725	20010531
AU200169725 A5	20011211	AU20010069725	20010531
AU200175070 A1	20011211	AU20010075070	20010531
AU200175070 A5	20011211	AU20010075070	20010531
BRPI0111338 A	20030617	BR2001PI11338	20010531
BRPI0111657 A	20031007	BR2001PI11657	20010531
CA2408663 AA	20021112	CA20012408663	20010531
CA2408937 AA	20021112	CA20012408937	20010531
CN100369940 C	20080220	CN20018013360	20010531
CN100384892 C	20080430	CN200410090569	20010531
CN100406478 C	20080730	CN20018010575	20010531
CN101186660 A	20080528	CN200710160087	20010531
CN101311182 A	20081126	CN200810100023	20010531
CN1432027 A	20030723	CN20018010575	20010531
CN1444606 A	20030924	CN20018013360	20010531
CN1626558 A	20050615	CN200410090569	20010531
EP1290043 A2	20030312	EP20010948254	20010531
EP1292623 A2	20030319	EP20010939778	20010531
EP1292624 A2	20030319	EP20010941742	20010531
JP2003535107 T2	20031125	JP20020500959T	20010531
JP2003535190 T2	20031125	JP20020500958T	20010531
JP2004502652 T2	20040129	JP20020500953T	20010531
JP2004517933 T2	20040617	JP20020559466T	20020125
KR20030005432 A	20030117	KR20027016228	20010531
KR20030007830 A	20030123	KR20027016381	20010531
MXPA02011811 A1	20030514	MX2002PA11811	20010531
MXPA02011836 A1	20030514	MX2002PA11836	20010531
US2002028741 AA	20020307	US20010871100	20010531
US2002028897 AA	20020307	US20010870596	20010531
US2002037982 AA	20020328	US20010870597	20010531
US2003130449 AA	20030710	US20020272765	20021017
US2003130453 AA	20030710	US20020273049	20021017
US6506861 BB	20030114	US20010871100	20010531
US6541585 BB	20030401	US20010870597	20010531
US7115763 BB	20061003	US20020273049	20021017
US7683147 BB	20100323	US20020272765	20021017
WO0192342 A2	20011206	WO2001US17627	20010531
WO0192342 A3	20030116	WO2001US17627	20010531
WO0192347 A2	20011206	WO2001US17628	20010531
WO0192347 A3	20030116	WO2001US17628	20010531
WO0192348 A2	20011206	WO2001US17636	20010531
WO0192348 A3	20020725	WO2001US17636	20010531
WO0192354 A2	20011206	WO2001US17626	20010531
WO0192354 A3	20030116	WO2001US17626	20010531
WO02059165 A2	20020801	WO2002US03088	20020125
WO02059165 A3	20030522	WO2002US03088	20020125

Probable Assignee: E I DU PONT DE NEMOURS AND CO

Assignee(s):(std)**:** BROOKHART MAURICE S ; DOBBS KERWIN D ; DU PONT ; JOHNSON LYNDA K ; ITTEL STEVEN D ; HAUPTMAN ELISABETH ; IONKIN ALEX S ; WANG YING ; MCCORD ELIZABETH F ; WANG LIN ; RADZEWICH CATHERINE E ; WANG YIN ; MALINOSKI JON M ; LIU WEIJUN ; KUNITSKY KEITH ; KREUTZER KRISTINA A ; ITTEL STEVEN DALE ; JOHNSON LYNDA KAYE ; EIDU PONT DE NEMOURS AND CO ; BENNETT ALISON M A

Assignee(s): BENNETT ALISON MARGARET ANNE ; BENNETT ALISON M ; EI DUPONT DE NEMOURS AND CO ; E I DU PONT DE NMEOURS AND CO ; LONKIN ALEX S ; MCCORD ELIZABETH FORRESTER ; E I DU PONT DE NMEOURS AND COMPANY ; E I DUPONT DE NEMOURS AND COMPANY ; E I DU PONT DE NEMOURS AND CO ; E I DU PONT DE NEMOURS AND COMPANY ; IONKIN ALEX SERGEY ; EI DU PONT DE NEMOURS AND CO

Inventor(s):(std)**:** BENNETT ALISON M A ; BROOKHART MAURICE S ; DA WANG LIN HAUPTMAN ELISABETH ; DALE ITTEL STEVEN ; FORRESTER MCCORD ELIZABETH ; HOPERTMAN E ; IONKIN A S ; ITTEL STEVEN D ; JOHNSON L K ; KAYE JOHNSON LYNDA ; KREUTZER KRISTINA A ; KUNITSKY KEITH ; LIN WANG ; LIU WEIJUN ; LONKIN ALEX S ; MALINOSKI JON M ; MCCORD ELIZABETH F ; MCCORD ELIZABETH FORRESTER ; ELISABETH HAUPTMAN ; WANG L ; WANG YIN ; YING WANG ; WANG YING ; JOHNSON LYNDA KAYE ; JOHNSON LYNDA K ; ITTEL STEVEN DALE ; IONKIN ALEX SERGEY ; IONKIN ALEX S ; HAUPTMAN ELISABETH ; DOBBS KERWIN D ; BENNETT ALISON MARGARET ANNE ; WANG LIN ; RADZEWICH CATHERINE E

Inventor(s): LK JOHNSON ; IONKIN AS ; WANG LIN HAUPTMAN ELISABETH JOHNSON LYNDA KAYE MCCORD ELIZABETH FORRESTER WANG YING ITTEL STEVEN DALE ; WANG LIN HAUPTMAN ELISABETH JOHNSON LYNDA KAYE... ; ELIZABETH F MCCORD ; STEVEN D ITTEL ; LYNDA K JOHNSON ; L K JOHNSON ; L WANG ; KERWIN D DOBBS ; E HOPERTMAN ; CATHERINE E RADZEWICH ; A S IONKIN ; ALEX S IONKIN ; ALISON M A BENNETT ; BENNETT ALISON M

Agent(s): CALLINANS; FISHER ADAMS KELLY CALLINANS; SPRUSON AND FERGUSON; BENNETT JONES LLP; ABE KAZUO; TANI YOSHIKAZU; BARRY D

Designated states: AE AG AL AM AT AU AZ BA BB BE BF BG BJ BR BY BZ CA CF CG CH CI CM CN CO CR CU CY CZ DE DK DM DZ EC EE ES FI FR GA GB GD GE GH GM GN GQ GR GW HR HU ID IE IL IN IS IT JP KE KG KP KR KZ LC LI LK LR LS LT LU LV MA MC MD MG MK ML MN MR MW MX MZ NE NL NO NZ OM PH PL PT RO RU SD SE SG SI SK SL SN SZ TD TG TJ TM TN TR TT TZ UA UG US UZ VN YU ZA ZM ZW

International class (IPC 8-9): B01J31/00 C07C251/06 C07C251/08 C07C251/20 C07C251/24 C07D209/40 C07D307/33 C07F15/00 C07F15/04 C07F19/00 C07F5/06 C07F7/00 C07F7/28 C07F9/50 C07F9/572 C07F9/58 C08F10/00

C08F10/02 C08F110/02 C08F118/02 C08F20/10 C08F210/00 C08F210/02 C08F216/02 C08F216/20 C08F216/36 C08F220/12 C08F220/18 C08F220/24 C08F220/30 C08F222/14 C08F4/00 C08F4/06 C08F4/16 C08F4/44 C08F4/52 C08F4/60 C08F4/605 C08F4/619 C08F4/64 C08F4/642 C08F4/70 C08F4/76 C08F4/80 (Advanced/Invention);
C08F110/02 C08F110/14 C08F210/02 C08F220/18 C08F220/30 C08F4/00 C08F4/06 (Advanced/Non-invention);
C07C251/00 C07D209/00 C07D307/00 C07F15/00 C07F7/00 C07F9/00 C08F10/00 C08F20/00 C08F4/00 (Core/Invention);
C08F110/00 C08F210/00 (Core/Non-invention)

International class (IPC 1-7): B01J31/00 C07C251/06 C07C251/08 C07C251/20 C07C251/24 C07D209/40 C07D307/33 C07F15/00 C07F15/04 C07F19/00 C07F5/06 C07F7/00 C07F7/28 C07F9/50 C07F9/572 C07F9/58 C08F10/00 C08F10/02 C08F110/02 C08F118/02 C08F210/00 C08F210/02 C08F4/00 C08F4/06 C08F4/16 C08F4/44 C08F4/60 C08F4/605 C08F4/64 C08F4/642 C08F4/70 C08F4/80 C08F46/42

CPC: C08F4/659 C08F4/65908 C08F4/65912 C08F110/14 B01J31/1805 B01J31/2282 B01J2231/122 B01J2531/847 C07F9/46 C07F9/5004 C07F9/5009 C07F15/0066 C07F15/045 C08F4/619 C07F7/003 C08F10/00 C07F15/04 C08F110/02 C08F210/02

European class: B01J31/18B B01J31/22D C07F15/00N5B C07F15/04 C07F15/04B C07F7/00B2 C07F9/46 C07F9/50A1 C07F9/50A1W C08F10/00 L01J231/12B L01J531/84F M08F110/02 M08F110/14 M08F210/02 M08F4/619 M08F4/659 M08F4/659D M08F4/659K

US class: 13/138 13/141 13/146 13/51 502/103 502/103S 502/155 502/167 526/131 526/134 526/134P 526/135 526/160 526/161 526/164 526/169 526/169.1 526/170 526/171 526/171S 526/172 526/172P 526/172S 526/178 526/282 526/282S 526/308 526/308S 526/319 526/319P 526/319S 526/328 526/328.5 526/346 526/346S 526/348 526/352 526/352S 556/13 556/138 556/141 556/146 556/32 556/51

Classification Explorer

Cited documents: WO9954364 A1, WO9930822 A1, WO9910391 A1, WO9905189 A1, WO9847933 A1, WO9842665 A1, WO9842664 A1, WO9840374 A2, WO9830610 A1, WO9830609 A1, WO9702298 A1, US6541585 BB, US6465385 BA, US6303720 BA, US6200925 BA, US6174976 BA, US6174976 B1, US6174975 BA, US6174975 B1, US6156857 A, US6133387 A, US6103658 A, US6060569 A, US6002032 A, US5942461 A, US5939503 A, US5770538 A, US5527929 A, US4698403 A, JP2002504485 T2, JP2000502665 T2, JP2000072810 A2,

Forward Citations: WO18134757, WO11026860, WO08038173, WO08038173, WO07145478, WO06083549, WO05066225, WO05033154, WO04078801, WO04078801, WO04078337, WO04078337, WO03076450, WO03074576, WO03031485, WO03031485, WO0222694, US8796403, US8703544, US8449603, US8125060, US7968487, US7964680, US7863394, US7825200, US7754839, US7737234, US7683147, US7671150, US7651971, US7635739, US7605105, US7524905, US7479531, US7473746, US7351845, US7312284, US7285609, US7259214, US7214748, US7211639, US7199074, US7176158, US7172986, US7098165, US7087687, US7056996, US7053159, US7037990, US7030200, US7022785, US6946532, US6844446, US6825356, US6706891, US6656869, US6605677, US6579823, US6559091, US6545108, US2011065950, US2010240849, US2008207855, US2008207854, US2007066775, US2007049712, US2006063898, US2005277749, US2005277569, US2005245702, US2005075472, US2005043494, US2004186007, US2004181018, US2004132936, US2004132610, US2003130452, US2003130449, US2002099155, KR100856692, JP2013503733, JP2010529083, JP2007077395, JP2006519914, EP2305721, EP2305721, EP1964862, EP1699834, EP1626999, EP1284271, CN105524208, CN105524208, CN104151455, CN103833792, CN103833792, CN103418435, CN103237845, CN103237845, CN102625731, CN102625731, CN102050840, CN101906183,

Abstract:
Olefins are polymerized by novel transition metal complexes of selected iminocarboxylate and iminoamido ligands, sometimes in the presence of cocatalysts such as alkylaluminum compounds or neutral Lewis acids. Olefins which may be (co)polymerized include ethylene, alpha-olefins, and olefins containing polar groups such as olefinic esters for example acrylate esters. Also described are certain "Zwitterionic" transition metal complexes as polymerization catalysts for making polar copolymers. The resulting polymers are useful as thermoplastics and elastomers.

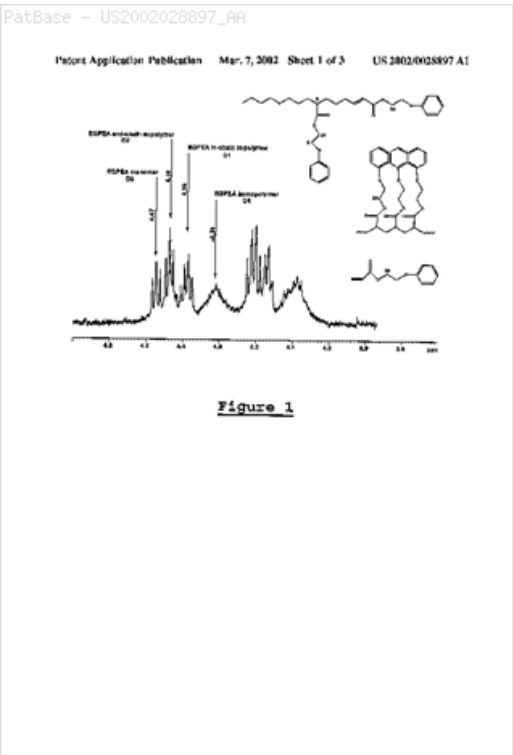

21) Family number: 42614504 (US2008295783A)

Title: CONTROLLED ODOR MIMIC PERMEATION SYSTEM

Priority: US20060831556P 20060718 US20070779815 20070718

Family:

Publication number	Publication date	Application number	Application date
US2008295783 AA	20081204	US20070779815	20070718
US9706755 BB	20170718	US20070779815	20070718

Probable Assignee: FLORIDA INT UNIV BOARD OF TRUSTEES

Assignee(s):(std)**:** FLORIDA INTERNAT UNIVERSITY BO ; FURTON KENNETH G ; HARPER ROSS J ; FLORIDA INT ; FLORIDA INT UNIV BO

Assignee(s): FLORIDA INT UNIV BOARD OF TRUSTEES ; THE FLORIDA INTERNATIONAL UNIVERSITY BOARD OF TRUSTEES

Inventor(s):(std)**:** FURTON KENNETH G ; HARPER ROSS J

Agent(s): MARSHALL GERSTEIN AND BORUN LLP

International class (IPC 8-9): A01K15/02 B01D59/44 F41H11/132 G12B13/00 (Advanced/Invention); A01K15/00 B01D59/00 G12B13/00 (Core/Invention)

CPC: A01K15/02 F41H11/132

European class: A01K15/02

US class: 119/712 250/282 73/1.01

Classification Explorer

Cited documents: US6766612 BA, US6109537 A, US5648636 A, US4605165 A, US2007221087 AA, US2006037509 AA, US2005284414 AA, US2001047771 AA,

Forward Citations: WO17040871, US9807979, US9250222, US9108890, US9103714, US9052290, US8994934, US8743358, US8582089, US8379193, US8368880, US8054454, US2015056913, US2014311218, US2014097551, US2012210948, US2010225899, US2009139459, EP2751559,

Abstract:
The primary aspect of the Controlled Odor Mimic Permeation System (COMPS) is that it provides a field deployable instant and reproducible source of known amounts of target odors. This technology consists of a permeable polymer container (chosen to suit target odor and release rate required), stored inside a non-permeable package. The design allows for the pre-equilibration of the target odors such that the outer surface of the inner package can saturate with odor during storage. Removal of the inner item then provides an instant and reproducible source of known target vapor flux. We have successfully demonstrated this technology by placing the target odor chemicals within permeable membranes such as low density polyethylene which are then sealed within a non-permeable membranes such as metallized polyester. This design has multiple advantages including preventing cross contamination when storing multiple odor targets (5-10 targets are commonly employed) as well as being light-weight disposable, low unit cost potential, no external power/operating unit/machinery/hardware, simple to use and providing a known reproducible concentration of the target odors to the detector in the field. The applications of these COMPS include the whole range of biological (e.g. detector dog) and electronic (e.g. field sensors) detectors with examples such as explosives (e.g. 2-ethyl-1-hexanol simulating plasticized explosives), drugs (e.g. 3,4-methylenedioxybenzaldehyde simulating ecstasy), human remains (including dimethyl disulfide and pentanoic acid) and live human scent (including 5-heptene-2-one and nonanol).

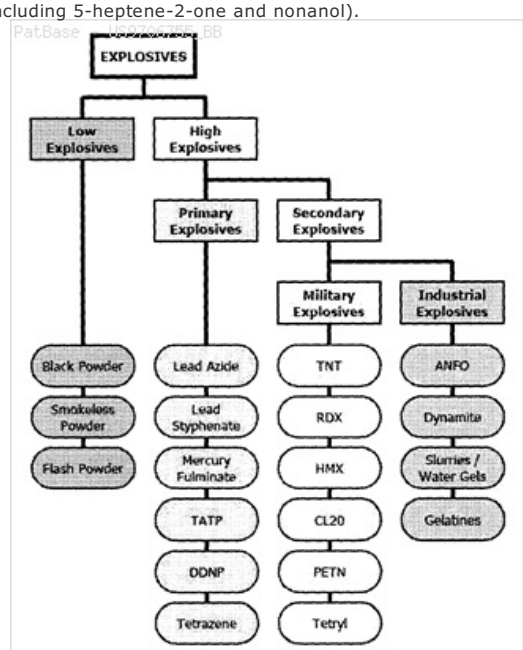

Table 3 - Explosive categories and sub-categories

22) Family number: 63842513 (US2018080750A)

Title: DETONATOR PACKAGING SYSTEM AND METHOD

Priority: US20150146506P 20150413 US20160564634 20160413 WO2016US27236 20160413

Family:

Publication number	Publication date	Application number	Application date
AU2016250090 AA	20161020	AU20160250090	20160413
AU2016250090 BB	20180301	AU20160250090	20160413
CA2979888 AA	20170914	CA20162979888	20160413
CA2979888 C	20180508	CA20162979888	20160413
CL2017002500 A1	20180420	CL20170002500	20171003
CL56722 B	20181123	CL20170002500	20171003
CO20170010117 A2	20180228	CO20170010117	20171004
ID201801428 A	20180209	ID2017P0006834	20160413
MX2017012820 A1	20180420	MX20170012820	20160413
PE15502017 A1	20171027	PE20170001968	20160413

TR201714452 T1	20171121	TR20170014452T	20160413
US2018080750 AA	20180322	US20160564634	20160413
WO16168265 A1	20161020	WO2016US27236	20160413

Probable Assignee: DYNO NOBEL INC

Assignee(s):(std)**:** DYNO NOBEL INC

Assignee(s): OLIVARES CESAR A ; RIVERA LEONARDO G ; THOMAS J DONALDSON

Inventor(s):(std)**:** RIVERA LEONARDO G ; RVERA LEONARDO G ; THOMAS J DONALDSON ; LEONARDO G RIVERA ; J DONALDSON THOMAS ; CESAR A OLIVARES ; OLIVARES CESAR A ; OLVARES CESAR A

Inventor(s): RIVERA LEANDRO G

Agent(s): PIZZEYS PATENT AND TRADE MARK ATTORNEYS PTY LTD; GOWLING WLG CANADA LLP; ESTUDIO VILLASECA Y CIA; HELENA CAMARGO WILLIAMSON; ACHMAD FATCHY SH; HANDE MUMCUOGLU; LIBERT VICTOR E

Designated states: AE AG AL AM AO AT AU AZ BA BB BE BF BG BH BJ BN BR BW BY BZ CA CF CG CH CI CL CM CN CO CR CU CY CZ DE DK DM DO DZ EC EE EG ES FI FR GA GB GD GE GH GM GN GQ GR GT GW HN HR HU ID IE IL IN IR IS IT JP KE KG KM KN KP KR KZ LA LC LK LR LS LT LU LV LY MA MC MD ME MG MK ML MN MR MT MW MX MY MZ NA NE NG NI NL NO NZ OM PA PE PG PH PL PT QA RO RS RU RW SA SC SD SE SG SI SK SL SM SN ST SV SY SZ TD TG TH TJ TM TN TR TT TZ UA UG US UZ VC VN ZA ZM ZW

International class (IPC 8-9): B65B27/06 B65B29/00 B65D79/00 B65D85/04 B65D85/30 F42B3/00 F42B39/00 F42B39/30 (Advanced/Invention)

CPC: B65D79/00 F42B39/14 F42B3/00 F42B39/30 B65B27/06 B65D85/04 B65D85/30 B65D2585/86

Classification Explorer

Cited documents: US5585591 A, US5494152 A, US2352998 A,

Abstract:
A packaging system includes a container (**34**) within which are disposed first detonator devices (**10**) having reactive coils (**16**), e.g., coils of shock tube leads, and second detonator devices (**20**) having inert coils (**26**), e.g., coils of insulated electric leg wires. The inert coils (**26**) are interposed between the reactive coils (**16**) and are approximately co-extensive with the reactive coils (**16**), so that the inert coils (**26**) form a barrier to propagation of an accidental initiation from one reactive coil (**16**) to another. Reactive coils (**16**) and inert coils (**26**) are fastened to each other to form mixed coil pairs (**30**) which are nested to interpose a pair of the inert coils (**26**) between at least some of the reactive coils (**16**). A method of packing the first and second detonator devices calls for placing them in a container (**34**) in the described arrangement.

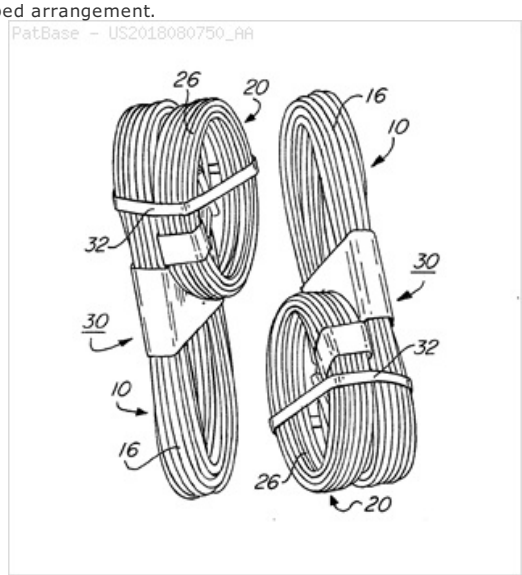

23) Family number: 57180593 (US2014227548A)

© PatBase

Title: NANOPARTICLES, COMPOSITIONS, MANUFACTURE AND APPLICATIONS

Priority: US20120664987P 20120627 US20120745810P 20121225 US20130929771 20130627 US20140190082 20140225

Family:

Publication number	Publication date	Application number	Application date
US2014227548 AA	20140814	US20140190082	20140225
US9765271 BB	20170919	US20140190082	20140225

Probable Assignee: MYRICK JAMES J

Assignee(s):(std)**:** MYRICK JAMES J

Inventor(s):(std)**:** MYRICK JAMES J

Agent(s): HUSCH BLACKWELL LLP

International class (IPC 8-9): C01B33/021 C01B33/027 C01B33/037 C06B33/06 C06B45/30 C10L1/28 C23C14/00 F42B3/10 (Advanced/Invention)

CPC: C06B45/30 C10L1/28 C01B33/027 C06B33/06 Y10T428/12181

US class: 102/200 149/5 203/40 428/570 44/320

Classification Explorer

Cited documents: US6455455 BA, US3008887 A, US2008248307 AA, US2007158182 AA,

Forward Citations: WO17105662, WO17064711, WO17030955, WO16191253, US9955577, US9850592, US9763314, US9658044, US9655814, US9644894, US9533265, US9447008, US9446994, US9314715, US9310174, US9233883, US9196412, US9029252, US2018062322, US2017154535, US2016273885, US2016258730, US2016024681, US2015372294, US2015325328, US2015306520, US2015268017, US2015249025, US2015202434, US2015107476, US2015050816, US2015034220, US2014225067, US2014125439, US2013328175, US2013305927, US10106755, US10072991, US10031082, RU2572475,

Abstract:
There are disclosed energetic nanoparticle compositions and materials containing silicon and other energetic elements, and methods of manufacturing the same, including reacting silicon nanoparticles and unsaturated alkene or alkyne to form covalently bonded surface coatings passivated against surface oxidation, for combination with a fuel, explosive or oxidizer.

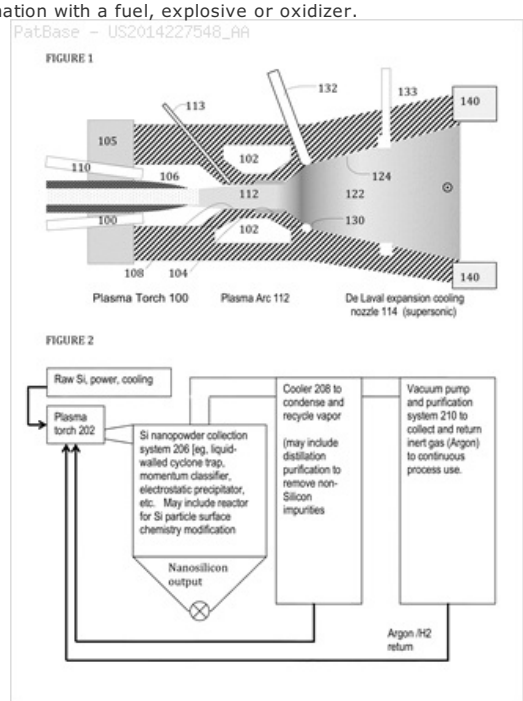

24) Family number: 29434608 (US5433976A)

© PatBase

Title: Metal pretreated with an aqueous solution containing a dissolved inorganic silicate or aluminate, an organofuctional silane and a non-functional silane for enhanced corrosion resistance

Priority: US19940207565 19940307 WO1995US02580 19950303

Family:

Publication number	Publication date	Application number	Application date
AT170932 E	19980915	AT19950913521T	19950303
AU199520927 A1	19950925	AU19950020927	19950303
AU677121 B2	19970410	AU19950020927	19950303
BRPI9507044 A	19970909	BR1995PI07044	19950303
CA2185163 AA	19960909	CA19952185163	19950303
CN1146217 A	19970326	CN19951092626	19950303
DE69504641 D1	19981015	DE19956004641	19950303
DE69504641 T2	19990218	DE19956004641T	19950303
DK0749501 T3	19990607	DK19950913521T	19950303
EP0749501 A1	19961227	EP19950913521	19950303
EP0749501 B1	19980909	EP19950913521	19950303
ES2123241 T3	19990101	ES19950913521T	19950303
HU75966 A2	19970528	HU19960002448	19950303
HU75966 AB	19970528	HU19960002448	19950303
IL112919 A0	19950629	IL19950112919	19950307
IL112919 A1	19981206	IL19950112919	19950307
JP9510259 T2	19971014	JP19950523521T	19950303
KR19970701805 A	19970412	KR19960704898	19960905
KR19977001805 A	19970412	KR19967004898	19950303
MX9603914 A1	19970930	MX19960003914	19950303
NZ282955 A	19980527	NZ19950282955	19950303
PE43195 A1	19951230	PE19950263598	19950307
PH31635 A	19990112	PH19950050076	19950307
PL316253 A1	19970106	PL19950316253	19950303
RO117194 B	20011130	RO19960001767	19950303
RO117194 B1	20011130	RO19960001767	19950303
RU2110610 C1	19980510	RU19960120076	19950303
RU96120076 A	19981210	RU19960120076	19960911
TH18496 A	19960509	TH19951000475	19950307
TW357196 B	19990501	TW19950102124	19950306
US5433976 A	19950718	US19940207565	19940307
WO9524517 A1	19950914	WO1995US02580	19950303
ZA9501876 A	19960307	ZA19950001876	19950307

Probable Assignee: OF CINCINNATI UNIV

Assignee(s):(std)**:** ARMCO INC ; CINCINNATI UNIV ; UNIV CINCINNATI ; UNIVERSITY OF CINCINNATI CINCINNATI

Assignee(s): UNIVERSITY OF CINCINNATI CINCINATTI OHIO US ; UNIVERSITY OF CINCINNATIUS ; VAN OOIJ WIM J ; JUNIVERSITI OF TSINTSINNATI ; OF CINCINNATI CINCINNATI UNIV ; OF CINCINNATI MAIL LOCATION UNIV ; OF CINCINNATI UNIV ; SABATA ASHOK ; THE UNIVERSITY OF CINCINNATI CINCINNATI OHIO US

Inventor(s):(std)**:** OOIJ WIM J VAN ; OOIJ WIM VAN ; SABATA ASHOK ; VAN OOIJ WIM J ; VIM JVAN OEHJ ; WIM J VAN

	OOIJ ; WIM J VANOOIJ ; OOIJ VAN WIM J ; ASHOK SABATA
Inventor(s):	VIM J VAN OEHJ ; ASHOK SABATA[IN] ; WIM VAN OOIJ ; VIM J.VAN OEHJ[NL] ; VAN OOIJ WILM J ; SABATA ASHOK MIDDLETOWN OH 45044 US
Agent(s):	DAVIES COLLISON CAVE; DAVIES COLLISON CAVE PTY LTD; BORDEN LADNER GERVAIS LLP; DR YITZHAK HESS AND PARTNERS
Designated states:	AM AT AU BB BE BF BG BJ BR BY CA CF CG CH CI CM CN CZ DE DK EE ES FI FR GA GB GE GN GR HU IE IT JP KE KG KP KR KZ LI LK LR LT LU LV MC MD MG ML MN MR MW MX NE NL NO NZ PL PT RO RU SD SE SI SK SN SZ TD TG TJ TT UA UG UZ VN
International class (IPC 8-9):	B05D3/12 B05D7/00 B05D7/14 B05D7/16 C23C10/02 C23C10/08 C23C22/60 C23C22/78 C23C22/83 (Advanced/Invention); B05D7/00 B05D7/14 C23C22/60 C23C22/78 (Advanced/Non-invention); B05D7/14 B05D7/16 C23C22/05 C23C22/78 C23C22/82 (Core/Invention); B05D7/00 C23C10/02 C23C10/08 (Core/Non-invention)
International class (IPC 1-7):	B05D3/00 B05D3/12 B05D7/14 C23C10/02 C23C10/08 C23C22/43 C23C22/60 C23C22/66 C23C22/78 C23C22/83
CPC:	B05D7/16 B05D7/54 C23C22/60 C23C22/83 C23C2222/20
European class:	B05D7/16 C23C22/60 C23C22/83 L05D7/00N2E L05D7/54 M23C222/20
US class:	427/327 427/337 427/387 427/388.4
Classification Explorer	
Cited documents:	US5326594 A, US5322713 A, US5292549 A, US5221371 A, US5108793 A, US4889775 A, US4828616 A, US4411964 A, US4407899 A, JP63130796 A2, JP62056878 A2, JP61007877 A2, JP60162560 A2, JP58050179 A2, JP52141436 A2, JP52050940, JP38582, JP2038582 A2, JP2038582, GB2261617 A1, DE3432118 A1, DE3151115 A1,
Forward Citations:	WO9951793, WO9830735, WO9830735, WO15007789, WO15007789, WO14032779, WO12167930, WO08122427, WO08122427, WO08003273, WO03012167, WO03012167, US9739169, US9656297, US8609755, US7994249, US7972659, US7964286, US7704563, US7563513, US7527872, US7524535, US7011719, US6994779, US6955728, US6919469, US6887308, US6866896, US6827981, US6777094, US6756079, US6703078, US6605365, US6599643, US6596835, US6592738, US6572756, US6506499, US6416869, US6409874, US6361592, US6261638, US6258243, US6162547, US6153080, US6149794, US6132808, US6106901, US6071566, US5789085, US5759629, US5750197, US5700523, US2015225856, US2013344318, US2010160544, US2009229724, US2008026151, US2007092739, US2007090329, US2007059448, US2007056469, US2006228470, US2006166014, US2005229816, US2005186347, US2004234787, US2004191536, US2004188262, US2004161603, US2004139887, US2004034109, US2004028829, US2003180552, US2003178317, US2003165627, US2003026912, US10041176, US10011907, RU2652324, KR101897771, JP2016534219, JP2010523365, JP2007291531, FR2847913, EP3022330, EP2907894, EP2888385, EP1736567, EP1415019, EP1277572, EP1163297, EP1002889, EP1002889, DE19980594, CN105723014, CN105705593, CN104846361,

Abstract:
Painted metal sheet pretreated with an insoluble, composite layer containing siloxane. The composite layer is formed by rinsing the sheet with an alkaline solution containing at least 0.005M of a dissolved silicate or a dissolved aluminate, at least 0.1 vol.- percent of an organofunctional silane and at least 0.02 vol.- percent of a crosslinking-agent having two or more trialkoxysilyl groups. After the sheet is dried, the composite layer has a thickness of at least 10 ANGSTROM. After being painted, the siloxane forms a tenacious covalent bond between the paint and the metal substrate.

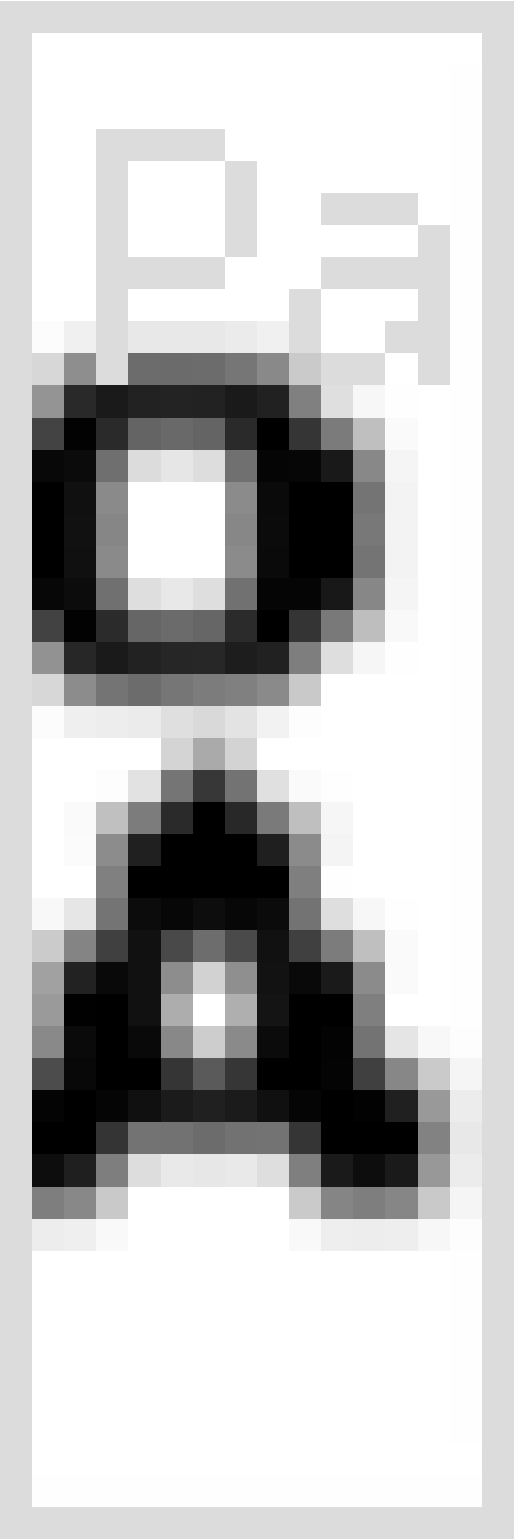

25) Family number: 65193642 (US2019008157A)

© PatBase

Title: MICROALGAE BASED COMPOSITIONS AND METHODS FOR APPLICATION TO PLANTS

Priority: US20150217386P 20150911 US20150222089P 20150922 US20150253265P 20151110 WO2016US50986 20160909 US20160752428 20160909

Family:

Publication number	Publication date	Application number	Application date
CA2995741 AA	20180214	CA20162995741	20160909
CL2018000464 A1	20180914	CL20180000464	20180221
EP3346841 A1	20180718	EP20160845137	20160909
JP2018532423 T2	20181108	JP20180532518T	20160909
MX2018002259 A1	20180814	MX20180002259	20160909
US2019008157 AA	20190110	US20160752428	20160909
WO17044774 A1	20170316	WO2016US50986	20160909

Probable Assignee: HELIAE DEV LLC

Assignee(s):(std)**:** MADATHIL MANIKANDADAS MATHILAKATHU ; VENTRE STEPHEN ; WHEELER JERALD ; SHINDE SANDIP ;

CARNEY LAURA ; HELIAE DEV LLC

Assignee(s): HELIAE DEVELOPMENT LLC

Inventor(s):(std)**:** CARNEY LAURA ; JERALD WHEELER ; LAURA CARNEY ; MADATHIL MANIKANDADAS MATHILAKATHU ; MANIKANDADAS MATHILAKATHU MADATHIL ; SANDIP SHINDE ; SHINDE SANDIP ; STEPHEN VENTRE ; VENTRE STEPHEN ; WHEELER JERALD

Inventor(s): MADATHL MANIKANDADAS MATHILAKATHU

Agent(s): SMART AND BIGGAR; ESTUDIO TRANSGLOBO LTDA Y O HUGO RUBIO G Y O ALEX SEVERIN S; BASSIL NICHOLAS CHARLES; HUNT DALE C ET AL

Designated states: AE AG AL AM AO AT AU AZ BA BB BE BF BG BH BJ BN BR BW BY BZ CA CF CG CH CI CL CM CN CO CR CU CY CZ DE DK DM DO DZ EC EE EG ES FI FR GA GB GD GE GH GM GN GQ GR GT GW HN HR HU ID IE IL IN IR IS IT JP KE KG KM KN KP KR KW KZ LA LC LI LK LR LS LT LU LV LY MA MC MD ME MG MK ML MN MR MT MW MX MY MZ NA NE NG NI NL NO NZ OM PA PE PG PH PL PT QA RO RS RU RW SA SC SD SE SG SI SK SL SM SN ST SV SY SZ TD TG TH TJ TM TN TR TT TZ UA UG US UZ VC VN ZA ZM ZW

International class (IPC 8-9): A01C1/00 A01G7/06 A01N63/00 A01N65/03 A01P21/00 C05D9/02 C05F11/00 (Advanced/Invention)

CPC: A01N63/00 A01N59/26

Classification Explorer

Cited documents: US2014090431 AA, US2013205850 AA,

Abstract:
Microalgae based compositions and methods of improving emergence and yield of plants by administering an effective amount of a microalgae based liquid composition in combination with other active ingredients including extracts from macroalgae, extracts from microalgae, minerals, humate derivatives, primary nutrients, micronutrients, chelating agents, and anti-biotics are disclosed. A method of applying a microalgae based composition to soil to increase the cation exchange capacity of the soil is also disclosed.

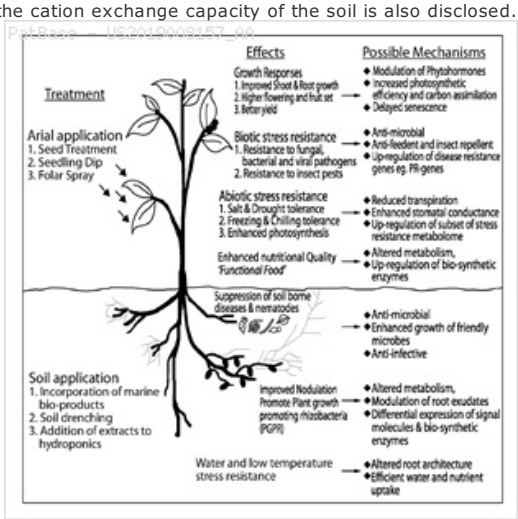

26) Family number: 44324730 (US2002032289A)

Title: CATALYSTS FOR OLEFIN POLYMERIZATION

Priority:

US20000208087P	20000531	US20000211601P	20000615	US20000214036P	20000623
US20010264537P	20010125	US20010264537P	20010126	US20010264537P	20010128
US20010871009	20010530	US20010871099	20010531	US20010294794P	20010531
WO2001US17627	20010531	US20020057090	20020125	WO2002US03088	20020125
US20040761030	20040120	US20040943199	20040916	US20080184467	20080801
US20100779182	20100513				

Family:

Publication number	Publication date	Application number	Application date
AU2001275070 AA	20011211	AU20010275070	20010531
AU2001275070 BB	20051110	AU20010275070	20010531
AU2002243792 AA	20020806	AU20020243792	20020125
EP1355956 A2	20031029	EP20020709300	20020125
US2002032289 AA	20020314	US20010871099	20010531
US2003125485 AA	20030703	US20020057090	20020125
US2004158012 AA	20040812	US20040761030	20040120
US2005043496 AA	20050224	US20040943199	20040916
US2010029469 AA	20100204	US20080184467	20080801
US2010222531 AA	20100902	US20100779182	20100513
US6710007 BB	20040323	US20020057090	20020125
US6897275 BB	20050524	US20010871099	20010531
US7060768 BB	20060613	US20040761030	20040120
US7439314 BB	20081021	US20040943199	20040916
US7998895 BB	20110816	US20080184467	20080801

Probable Assignee: E I DU PONT DE NEMOURS AND CO

Assignee(s):(std)**:** DU PONT ; UNIV NORTH CAROLINA

Assignee(s): NORTH CAROLINA AT CHAPEL HILL UNIV ; NORTH CAROLINA AT CHAPEL HILL UNIV OF ; OF NORTH CAROLINA AT CHAPEL HILL UNIV ; BROOKHART MAURICE S ; E I DU PONT DE NEMOURS AND CO ; E I DU PONT DE NEMOURS AND COMPANY ; EI DU PONT DE NEMOURS AND CO ; HAUPTMAN ELISABETH ; JOHNSON LYNDA KAYE ; ITTEL STEVEN DALE ; EI DUPONT DE NEMOURS AND CO ; E I DUPONT DE NEMOURS AND COMPANY ; KREUTZER KRISTINA A ; KUNITSKY KEITH ; WANG LIN ; MCLAIN STEPHAN J ; WANG YING ; MCCORD ELIZABETH FORRESTER ; LIU WEIJUN ; MALINOSKI JON M ; UNIVERSITY OF NORTH CAROLINA AT CHAPEL HILL

Inventor(s):(std)**:** HAUPTMAN ELISABETH ; HAUPTMAN ELISABETH M ; ITTEL STEVEN D ; ITTEL STEVEN DALE ; JOHNSON

LINDA KAYE ; JOHNSON LYNDA K ; JOHNSON LYNDA KAYE ; KREUTZER KRISTINA A ; KUNITSKY KEITH ; BROOKHART MAURICE S ; LIU WEIJUN ; MALINOSKI JON M ; MCCLAIN STEPHAN J ; MCCORD ELIZABETH F ; MCCORD ELIZABETH FORRESTER ; MCLAIN STEPHAN J ; WANG LIN ; WANG YIN ; WANG YING

Inventor(s): YING WANG ; MCLAIN STEPHAN ; MCCORD ELIZABETH ; JOHNSON LYNDA ; STEVEN D ITTEL ; LYNDA K JOHNSON ; ELISABETH HAUPTMAN ; ELIZABETH F MCCORD ; LIN WANG

Agent(s): CALLINANS; FISHER ADAMS KELLY CALLINANS; SPRUSON AND FERGUSON; E I DU PONT DE NEMOURS AND CO LEGAL PATENT RECORDS CENTER; E I DU PONT DE NEMOURS AND COMPANY,LEGAL PATENT RECORDS CENTER; BARRY DALE CASH

Designated states: AT BE CH CY DE DK ES FI FR GB GR IE IT LI LU MC NL PT SE TR

International class (IPC 8-9): B01J31/00 B01J31/02 B01J31/18 C07C251/06 C07C251/08 C07C251/20 C07C251/24 C07D209/40 C07D307/33 C07F15/00 C07F15/04 C07F19/00 C07F5/00 C07F5/06 C07F7/00 C07F9/28 C07F9/50 C07F9/572 C07F9/58 C08F10/00 C08F10/02 C08F118/02 C08F210/00 C08F220/02 C08F4/00 C08F4/06 C08F4/16 C08F4/42 C08F4/44 C08F4/60 C08F4/605 C08F4/619 C08F4/642 C08F4/70 C08F4/72 C08F4/76 C08F4/80 (Advanced/Invention);
C08F110/02 C08F110/14 C08F210/02 (Advanced/Non-invention);
C07C251/00 C07D209/00 C07D307/00 C07F15/00 C07F5/00 C07F7/00 C07F9/00 C08F10/00 C08F4/00 (Core/Invention);
C08F110/00 C08F210/00 (Core/Non-invention)

International class (IPC 1-7): B01J31/00 C07F5/00 C08F10/00 C08F4/00 C08F4/06 C08F4/44 C08F4/60 C08F4/70 C08F4/72 C08F4/76 C08F4/80

CPC: C08F4/659 C08F4/65908 C08F4/65912 C08F110/14 C07F15/006 C08F10/00 B01J31/1805 B01J31/2282 B01J2231/122 B01J2531/847 C07F9/46 C07F9/5004 C07F9/5009 C07F15/0066 C07F15/04 C07F15/045 C08F4/619 C08F110/02 C08F210/02

European class: B01J31/18B B01J31/22D C07F15/00N5 C07F15/00N5B C07F15/04 C07F15/04B C07F9/46 C07F9/50A1 C07F9/50A1W C08F10/00 L01J231/12B L01J531/84F M08F110/02 M08F110/14 M08F210/02 M08F4/619 M08F4/659 M08F4/659D M08F4/659K

US class: 502/117 502/15 502/150 502/150S 502/155 502/155S 502/162 502/162S 502/167 502/167S 502/208 502/213 526/126 526/126P 526/127 526/127S 526/160 526/160S 526/161 526/161P 526/161S 526/169 526/169.1 526/171 526/171P 526/171S 526/172 526/172P 526/172S 526/319 526/319S 526/329 526/329.7 526/352 526/352S 534/15 534/15S 546/2 546/2S 556/13 556/136 556/137 556/137S 556/138 556/138S 556/13S 556/19 556/21 556/21S 556/22 556/22S 556/23 556/26 556/32 556/35 556/35S 556/51 556/9 556/9S

Classification Explorer

Cited documents: WO9946271 A1, WO9830609 A1, WO9702298 A1, WO0050470 A2, US6232483 BA, US6174975 BA, US6174975 B1, US6127497 A, US6103658 A, US6060589 A, US6060569 A, US5880241 A, US5866663 A, US5714556 A, US4906754 A, US4698403 A, US3481908 A, US3278495 A, US3278485 A, US2002032289 AA, JP99292918 A2, JP9255713, JP51039589, JP11292918 A2, FR2159394 A1,

Forward Citations: US9815915, US9796645, US9701595, US9593288, US9469704, US9428531, US9409834, US9399746, US9365788, US9365663, US8921291, US8921290, US8920263, US8865959, US8834705, US8796403, US8759267, US8748362, US8748361, US8728999, US8716201, US8642523, US8604249, US8598288, US8598103, US8535514, US8530712, US8513478, US8501675, US8476205, US8461072, US8394746, US8299007, US8247358, US8207390, US8124809, US8071835, US7998895, US7994086, US7989670, US7871953, US7825200, US7651971, US7544757, US7479531, US7399937, US7291575, US7285609, US7259214, US7214748, US7202316, US7098165, US7094848, US7037990, US7005489, US6656869, US2015307537, US2014045614, US2013059993, US2011237799, US2011207639, US2011195884, US2011195883, US2011195882, US2011195878, US2011166389, US2011160502, US2011092658, US2011082061, US2010292424, US2010222531, US2010048438, US2010029469, US2009305877, US2009240012, US2009221775, US2009036725, US2009005279, US2008177121, US2008051533, US2008020928, US2008006517, US2007298990, US2007197751, US2007149732, US2007043248, US2007004854, US2005192178, US2005070728, US2005003955, US2004260043, US2004230015, US2004181018, US2004171479, US2004138056, US2004132936, US2004132610, US2004118035, US2004029719, US2003130452,

Abstract:
Transition metal complexes of selected monoanionic phosphine ligands, which also contain a selected Group 15 or 16 (IUPAC) element and which are coordinated to a Group 3 to 11 (IUPAC) transition metal or a lanthanide metal, are polymerization catalysts for the (co)polymerization of olefins such as ethylene and alpha-olefins, and the copolymerization of such olefins with polar group-containing olefins. These and other nickel complexes of neutral and monoanionic bidentate ligands copolymerize ethylene and polar comonomers, especially acrylates, at relatively high ethylene pressures and surprisingly high temperatures, and give good incorporation of the polar comonomers and good polymer productivity. These copolymers are often unique structures, which are described.

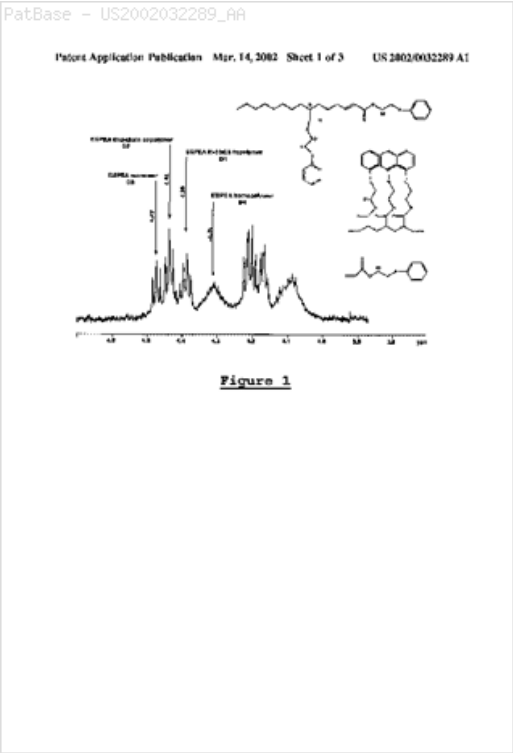

27) Family number: 43478736 (US2010300319A) © PatBase

Title: LOW TOXICITY PRIMER COMPOSITIONS FOR REDUCED ENERGY AMMUNITION

Priority: US20070016529 20071224 US20070016529P 20071224 WO2008CA02264 20081223 US20080809700 20081223

Family:

Publication number	Publication date	Application number	Application date
AU2008340941 AA	20090702	AU20080340941	20081223
AU2008340941 BB	20120726	AU20080340941	20081223
CA2713666 AA	20100623	CA20082713666	20081223
EP2240422 A1	20101020	EP20080864892	20081223
EP2240422 A4	20130522	EP20080864892	20081223
EP2240422 B1	20161221	EP20080864892	20081223
US2010300319 AA	20101202	US20080809700	20081223
WO09079788 A1	20090702	WO2008CA02264	20081223

Probable Assignee: GENERAL DYNAMICS ORDNANCE AND TACTICAL SYSTEMS CANADA INC

Assignee(s):(std)**:** GEN DYNAMICS ORDNANCE AND TACTIC ; GENERAL DYNAMICS ORDNANCE AND TACTICAL SYSTEMS CANADA INC ; GUINDON LOUISE

Assignee(s): GENERAL DYNAMICS ORDNANCE AND TACTICAL SYSTEMS CANADA VALLEYFIELD INC ; GENERAL DYNAMICS ORDNANCE AND TACTICAL SYSTEMS CANADA INC ; GENERAL DYNAMICS ORDNANCE AND TACTICAL SYSTEMS CANADA VALLEYFIELD INC ; GENERAL DYNAMICS ORDNANCE AND TACTICAL SYSTEMS CAN

Inventor(s):(std)**:** GUINDON LOUISE

Inventor(s): LOUISE GUINDON

Agent(s): BAXTER IP; BAXTER PATENT ATTORNEYS PTY LTD; HEENAN BLAIKIE LLP; PIASETZKI NENNIGER KVAS LLP; STAVSETH HELGE; KOPF WESTENBERGER WACHENHAUSEN PATENTANWAELTE PARTG MBB; MILTONS IP PI; FRENCH DAVID J

Designated states: AE AG AL AM AO AT AU AZ BA BB BE BF BG BH BJ BR BW BY BZ CA CF CG CH CI CM CN CO CR CU CY CZ DE DK DM DO DZ EC EE EG ES FI FR GA GB GD GE GH GM GN GQ GR GT GW HN HR HU ID IE IL IN IS IT JP KE KG KM KN KP KR KZ LA LC LI LK LR LS LT LU LV LY MA MC MD ME MG MK ML MN MR MT MW MX MY MZ NA NE NG NI NL NO NZ OM PG PH PL PT RO RS RU SC SD SE SG SI SK SL SM SN ST SV SY SZ TD TG TJ TM TN TR TT TZ UA UG US UZ VC VN ZA ZM ZW

International class (IPC 8-9): C06B25/00 C06B25/10 C06B25/32 C06B33/00 C06B43/00 C06C7/00 F42B12/40 F42B12/72 F42B5/16 F42B8/02 F42B8/12 F42C19/08 (Advanced/Invention);
F42C19/10 (Advanced/Non-invention);
C06B25/00 C06B33/00 C06C7/00 F42B12/00 F42B8/00 (Core/Invention)

CPC: F42C19/0803 F42B8/02 C06C7/00 F42B5/16 F42B8/12 F42B12/40 F42C19/10

European class: C06C7/00 F42B12/40 F42B5/16 F42B8/02 F42B8/12 F42C19/10

US class: 102/430 149/101 149/101S 149/108.2 149/108.200S 149/108.6 149/108.600S 149/88 149/88S 149/93 149/93S

Classification Explorer

Cited documents: WO9944968 A1, WO06083379 A2, WO06009579 A2, US6997998 BB, US6786986 BB, US6692655 BA, US5831208 A, US5417160 A, US5359937 A, US5216199 A, US5035183 A, US4689185 A, US4674409 A, US4082830 A, US3682727 A, US2011000390 AA, US2005183805 AA, CA2232744 AA,

Forward Citations: WO11123437, USD836180, USD828483, USD781393, USD780283, USD779624, USD779024, USD779023, USD779022, USD779021, USD778395, USD778394, USD778393, USD778391, US9933241, US9927219, US9885551, US9869536, US9857151, US9835427, US9835423, US9644930, US9631907, US9587918, US9551557, US9546849, US9523563, US9518810, US9513096, US9506735, US9441930,

US9429407, US9199887, US8470107, US8460486, US8454770, US8454769, US2016238355, US2011011502, US10145662, US10081057, US10048052, US10048049, US10041770, CN106631642,

Abstract:
A primer composition with reduced toxicity suited for reduced-energy ammunition comprises bismuth (III) oxide as the principal oxidizer and contains a portion of propellant composition mixed therein. This composition may also be used in a cartridge which is otherwise substantially free of any other propellant compound and preferably produces a residue which is substantially free of toxic substances.

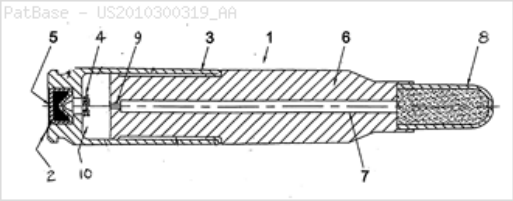

28) Family number: 42000759 (US2008168135A)

© PatBase

Title: INFORMATION INFRASTRUCTURE MANAGEMENT TOOLS WITH EXTRACTOR, SECURE STORAGE, CONTENT ANALYSIS AND CLASSIFICATION AND METHOD THEREFOR

Priority: US20070883522P 20070105 US20070746440 20070509 US20090453124 20090429 US20090584588 20090908 US20130900728 20130523 US20150597314 20150115 US20150597364 20150115 US20150597323 20150115 US20150597345 20150115 US20150597357 20150115

Family:

Publication number	Publication date	Application number	Application date
US2008168135 AA	20080710	US20070746440	20070509
US2009254572 AA	20091008	US20090453124	20090429
US2010250497 AA	20100930	US20090584588	20090908
US2013304761 AA	20131114	US20130900728	20130523
US2015149491 AA	20150528	US20150597364	20150115
US2015156206 AA	20150604	US20150597323	20150115
US2015199405 AA	20150716	US20150597345	20150115
US2015199410 AA	20150716	US20150597357	20150115
US2015200967 AA	20150716	US20150597314	20150115
US8468244 BB	20130618	US20090453124	20090429
US8655939 BB	20140218	US20090584588	20090908
US9015301 BB	20150421	US20070746440	20070509
US9734169 BB	20170815	US20130900728	20130523
US10182073 BB	20190115	US20150597314	20150115

Probable Assignee: DIGITAL DOORS INC

Assignee(s):(std)**:** DIGITAL DOORS INC ; NEMZOW MARTIN A ; REDLICH RON M

Inventor(s):(std)**:** REDLICH RON M ; NEMZOW MARTIN A

Agent(s): ROBERT C KAIN JR; ROBERT C; KAIN JR ROBERT C

International class (IPC 8-9): G06F11/00 G06F15/16 G06F15/167 G06F15/173 G06F17/30 G06F21/62 G06F7/00 G06F7/04 G06Q10/06 G06Q10/10 G06Q50/18 H04L29/06 H04L29/08 (Advanced/Invention); G06F15/16 G06F17/30 G06F7/00 (Core/Invention)

CPC: H04L67/1095 F41H13/00 F41H13/0093 G06F11/2094 G06F21/6218 H04L67/1097 H04L63/20 H04L63/105 G06Q10/06 G06Q10/10 G06Q10/107 G06Q50/18 H04L63/0227 G06F16/23 G06F16/2455 G06F16/2465 G06F16/26 G06F16/282 G06F16/93 G06F16/21

European class: F41H13/00 F41H13/00H G06F11/20S6 G06Q10/06 G06Q10/10 G06Q10/107 G06Q10/10M G06Q50/18 H04L29/08N9R H04L63/02B

US class: 1/1 1/1P 705/50 707/10 707/100 707/104.1 707/602 707/609 707/661 707/661P 707/722 707/737 707/754 707/755 707/770 707/777 707/781 707/827 707/827S 707/999.01 707/999.010S 707/999.1 707/999.100S 707/999.104 707/999.104S 707/E17.005 707/E17.005S 707/E17.032 707/E17.032S 707/E17.044 707/E17.044S 709/201 709/204 709/204P 709/205 709/212 709/216 709/217 709/223 709/225 709/229 709/246 715/255 726/1 726/22 726/23 726/24 726/26 726/27 726/29

Classification Explorer

Cited documents: WO0075779 A2, US9665603 BB, US8699796 BA, US8468244 BB, US7953814 BA, US7574496 BB, US7548843 BB, US7546334 BB, US7424524 BB, US7257584 BB, US7178021 BA, US7146644 BB, US7140044 BB, US7120625 BB, US7113954 BB, US7103915 BB, US7085766 BB, US7043492 BA, US7031961 BB, US7007008 BB, US6999959 BA, US6978262 BB, US6925454 BB, US6874139 BB, US6771290 BA, US6718347 BA, US6714977 BA, US6662189 BB, US6602298 BA, US6598161 BA, US6594654 BA, US6505150 BB, US6487538 BA, US6389542 BA, US6301668 BA, US6253203 BA, US6192472 BA, US6148342 A, US6094483 A, US6078907 A, US6073165 A, US6055544 A, US6044375 A, US6038227 A, US5996011 A, US5960808 A, US5960080 A, US5941944 A, US5933498 A, US5905980 A, US5832212 A, US5581682 A, US5532950 A, US5485474 A, US5036315 A, US2016381080 AA, US2016277368 AA, US2016042191 AA, US2014280248 AA, US2013041955 AA, US2012166616 AA, US2011209196 AA, US2011191303 AA, US2011022812 AA, US2010332401 AA, US2008282305 AA, US2008281915 AA, US2008177839 AA, US2008172745 AA, US2008168135 AA, US2008147781 AA, US2008104699 AA, US2008096605 AA, US2008083031 AA, US2008077638 AA, US2007282752 AA, US2007106754 AA, US2007105445 AA, US2007087756 AA, US2007061266 AA, US2007028001 AA, US2006288425 AA, US2006167857 AA, US2006136570 AA, US2005288939 AA, US2005278449 AA, US2005193250 AA, US2005165766 AA, US2005132070 AA, US2005108518 AA, US2005042593 AA, US2004111639 AA, US2004103147 AA, US2004054630 AA, US2003051054 AA, US2003023562 AA, US2002162093 AA, US2002116641 AA, US2002073313 AA, CA2345148 AA,

Forward Citations: WO18172669, WO18044676, WO17210798, WO17152291, WO17117595, WO17117574, WO17112767, WO17065888, WO16183564, WO16160850, WO16032575, WO15191720, WO15187566, WO15148441, WO15138347, WO15117268, WO15089463, WO15081131, WO14133749, WO14133749, WO14131041, WO14115031, WO14078717, WO14078717, WO14058805, WO14025821, WO14025821, WO14018614, WO13187934, WO13138979, WO13134852, WO13106590, WO13106590, WO13090555, WO13085500, WO13070282, WO13070282, WO13056032, WO13056032, WO13016137, WO12174664, WO12172386, WO12161908, WO12159057, WO12147087, WO12139098, WO12119218, WO12109139, WO12102850, WO12096868, WO12060890, WO12038949, WO12030954, WO12030354, WO12027646, WO12025865,

WO12012280, WO12012280, WO12004792, WO12002952, WO11159356, WO11123692, WO11106412, WO11103392, WO11100573, WO11097340, WO11079247, WO11062598, WO11057259, WO11008887, WO11008887, WO10104687, WO10104687, WO10077670, WO10056856, WO10033465, WO10028395, USD760256, USD759690, USD759689, USD735225, US9999038, US9998932, US9998870, US9998493, US9997819, US9997027, US9996691, US9996567, US9996528, US9992281, US9992170, US9992097, US9992074, US9991580, US9990382, US9986279, US9986034, US9985975, US9985932, US9984116, US9984094, US9979785, US9978025, US9977922, US9977809, US9973940, US9973584, US9973474, US9973416, US9973299, US9972048, US9972034, US9971820, US9967295, US9967249, US9967173, US9967002, US9965646, US9961388, US9960808, US9959350, US9959316, US9959156, US9954866, US9954795, US9954678, US9954287, US9954286, US9953105, US9952931, US9952774, US9949301, US9948458, US9948355, US9948354, US9948333, US9947982, US9946971, US9946743, US9946709, US9946708, US9942396, US9942266, US9942265, US9942051, US9935923, US9935791, US9935777, US9935703, US9934390, US9934382, US9934266, US9933949, US9930668, US9930146, US9930092, US9929935, US9929755, US9927517, US9924551, US9923872, US9922206, US9922120, US9922090, US9922037, US9921561, US9917817, US9917341, US9916621, US9916601, US9916457, US9913139, US9912776, US9912687, US9912419, US9912382, US9912381, US9912033, US9912027, US9911020, US9906564, US9906554, US9906549, US9906539, US9906500, US9906269, US9904893, US9904788, US9904681, US9904597, US9904535, US9900416, US9900384, US9900298, US9898763, US9898518, US9898496, US9898469, US9898157, US9893795, US9887976, US9887447, US9886814, US9886469, US9883444, US9882964, US9882900, US9882657, US9882277, US9882257, US9881157, US9876833, US9876753, US9876605, US9876587, US9876584, US9876571, US9876570, US9876264, US9872067, US9871821, US9871770, US9871558, US9871283, US9871282, US9870715, US9870392, US9870389, US9866925, US9866590, US9866534, US9866450, US9866309, US9866276, US9865911, US9864755, US9864598, US9860699, US9860490, US9860075, US9858492, US9858442, US9858440, US9858324, US9858001, US9857987, US9854330, US9854277, US9853342, US9852443, US9852121, US9848250, US9847924, US9847850, US9847566, US9846881, US9843584, US9842217, US9842126, US9841909, US9838896, US9838758, US9838450, US9838370, US9838349, US9838078, US9836957, US9836540, US9836523, US9836495, US9836494, US9836229, US9832606, US9832291, US9832222, US9832183, US9832123, US9832116, US9832044, US9831912, US9830646, US9830593, US9830568, US9830563, US9830463, US9830111, US9824609, US9824238, US9824231, US9820146, US9819654, US9817867, US9817859, US9817729, US9813454, US9813345, US9811525, US9807205, US9806818, US9806740, US9805210, US9805084, US9805025, US9800637, US9800327, US9799229, US9799036, US9798899, US9798882, US9798728, US9798538, US9794238, US9794064, US9794003, US9793955, US9793954, US9793951, US9792752, US9792655, US9792648, US9792361, US9788326, US9788203, US9787701, US9787412, US9785663, US9785498, US9781149, US9781147, US9780834, US9779157, US9779148, US9779125, US9779101, US9779100, US9779035, US9774626, US9774588, US9774520, US9774401, US9773124, US9773052, US9772830, US9769306, US9769130, US9769128, US9769020, US9768833, US9767676, US9767513, US9767306, US9767297, US9767222, US9767141, US9767129, US9767098, US9767065, US9766914, US9766879, US9762639, US9762577, US9762560, US9762460, US9762289, US9760862, US9760591, US9756171, US9755856, US9755697, US9754326, US9754117, US9753954, US9753896, US9753778, US9749083, US9749053, US9749013, US9748626, US9747758, US9747333, US9747270, US9742521, US9742462, US9740877, US9740763, US9740566, US9740390, US9736789, US9735833, US9734007, US9730037, US9729662, US9729616, US9729564, US9729513, US9729197, US9727577, US9727559, US9727492, US9723015, US9723014, US9723002, US9722318, US9721068, US9720900, US9720601, US9716746, US9716736, US9716691, US9716624, US9716622, US9715793, US9712663, US9712644, US9712561, US9712350, US9710852, US9710556, US9710511, US9710317, US9706265, US9706152, US9705610, US9705571, US9705561, US9703947, US9703888, US9703863, US9703770, US9703549, US9699785, US9699219, US9699198, US9697408, US9697263, US9697058, US9692852, US9692101, US9690821, US9690775, US9690671, US9686596, US9686194, US9686163, US9685992, US9684905, US9684688, US9684671, US9684666, US9684063, US9680800, US9680670, US9679159, US9679158, US9679157, US9679112, US9679032, US9679012, US9679006, US9678998, US9678948, US9674711, US9674660, US9674221, US9674167, US9674160, US9672538, US9672238, US9672066, US9671960, US9668208, US9667645, US9667514, US9667317, US9665433, US9661505, US9661025, US9660972, US9660825, US9659247, US9659095, US9659026, US9658987, US9658868, US9654583, US9654541, US9654351, US9654173, US9653770, US9652802, US9652614, US9652487, US9648581, US9646099, US9646069, US9641643, US9640850, US9639570, US9639551, US9639518, US9635048, US9634920, US9633505, US9633063, US9633024, US9628854, US9628116, US9627768, US9626699, US9626516, US9626413, US9623608, US9621435, US9621354, US9619852, US9619850, US9619579, US9619505, US9619504, US9619460, US9619210, US9615269, US9614835, US9613220, US9613150, US9613109, US9613018, US9613003, US9612959, US9609014, US9608740, US9608692, US9607336, US9607216, US9606854, US9602596, US9602543, US9601114, US9600806, US9600606, US9600572, US9596001, US9595051, US9594872, US9594759, US9594746, US9591381, US9591052, US9591022, US9591017, US9590948, US9590887, US9589148, US9589043, US9584576, US9582557, US9578097, US9578090, US9578062, US9577307, US9577306, US9576148, US9575980, US9575841, US9575680, US9571209, US9569449, US9569409, US9569298, US9568578, US9565470, US9564947, US9564123, US9563783, US9563681, US9563616, US9560425, US9560019, US9558677, US9558553, US9558519, US9558441, US9558241, US9558215, US9553812, US9552493, US9552347, US9552343, US9548991, US9547998, US9547635, US9544272, US9544006, US9542682, US9542493, US9542423, US9542408, US9542400, US9542322, US9540920, US9537719, US9536263, US9536059, US9535997, US9535968, US9535752, US9535669, US9531427, US9529851, US9525697, US9525524, US9525210, US9524399, US9521000, US9520945, US9519776, US9519685, US9519636, US9516144, US9516045, US9514302, US9514116, US9512706, US9509688, US9509674, US9509415, US9507949, US9507939, US9507849, US9507537, US9503504, US9503471, US9503375, US9503365, US9503358, US9503189, US9501541, US9497614, US9497282, US9497173, US9495344, US9495252, US9490869, US9489694, US9489647, US9489538, US9489453, US9489429, US9489395, US9489119, US9485376, US9485266, US9483365, US9483317, US9482539, US9479586, US9479529, US9479266, US9477731, US9477670, US9473576, US9473475, US9473405, US9471670, US9471577, US9471551, US9467870, US9467492, US9467355, US9466044, US9465821, US9465795, US9465696, US9462006, US9461890, US9461878, US9461706, US9460317, US9460140, US9460105, US9460083, US9456054, US9455835, US9451170, US9451050, US9451032, US9450940, US9450923, US9449069, US9448791, US9444838, US9444819, US9444809, US9444722, US9443225, US9443097, US9442919, US9442490, US9432199, US9430665, US9430617, US9430578, US9426113, US9424540, US9424509, US9424349, US9420733, US9420049, US9420007, US9418235, US9418150, US9417911, US9412371, US9411855, US9411687, US9411524, US9407549, US9407440, US9407432, US9405692, US9401864, US9401140, US9400800, US9400589, US9398038, US9398029, US9397827, US9396179, US9391896, US9391777, US9390434, US9390289, US9390270, US9390269, US9390176, US9390167, US9384677, US9383934, US9383933, US9380976, US9380147, US9380023, US9379979, US9378379, US9378191, US9374422, US9374368, US9374304, US9373267, US9372904, US9372794, US9369594, US9369494, US9369461, US9363347, US9363294, US9363195, US9363179, US9363086, US9361635, US9361469, US9361405, US9361354, US9361325, US9361304, US9361203, US9356998, US9356948, US9355407, US9355279, US9354683, US9350762, US9350714, US9344409, US9344378, US9342783, US9342621, US9342587, US9342557, US9342280, US9341488, US9338140, US9338008, US9336217, US9333231, US9330264, US9327004, US9326116, US9325730, US9325702, US9324074, US9323949, US9323948, US9323901, US9323731, US9322907, US9319390, US9319269, US9317718, US9317709, US9317572, US9317489, US9317369, US9313611, US9313223, US9312919, US9311500, US9311499, US9311409, US9311377, US9305177, US9305084, US9305037, US9304985, US9300359, US9298818, US9298817, US9298707, US9294727, US9294445, US9294444, US9292711, US9292700, US9292592, US9292488, US9292485, US9292482, US9290136, US9286571, US9286485, US9286362, US9280911, US9280618, US9280598, US9280546, US9276840, US9276751, US9275234, US9275198, US9275082, US9275040, US9274896, US9270662, US9270647, US9270460, US9268781, US9268768, US9265458, US9262642, US9262629, US9262511, US9262496,

US9262390, US9262255, US9258121, US9258118, US9258117, US9257842, US9256904, US9256727,
US9253207, US9251535, US9251374, US9251243, US9251097, US9250811, US9246936, US9245137,
US9245037, US9244843, US9244626, US9240922, US9237082, US9237019, US9235629, US9233134,
US9232176, US9230283, US9230107, US9229603, US9225675, US9223999, US9218499, US9215270,
US9215076, US9215075, US9213857, US9213709, US9203613, US9201965, US9201911, US9201910,
US9201885, US9201575, US9197409, US9197406, US9195840, US9195834, US9195725, US9195691,
US9189794, US9183262, US9182951, US9178701, US9176954, US9176951, US9176917, US9172745,
US9172608, US9171099, US9171048, US9171008, US9165079, US9164994, US9164833, US9160611,
US9158535, US9158534, US9152950, US9152944, US9152806, US9152727, US9152716, US9152470,
US9152435, US9152220, US9147042, US9143943, US9143451, US9141983, US9141808, US9141806,
US9141658, US9141656, US9141097, US9137304, US9135456, US9135436, US9135324, US9135322,
US9128981, US9128949, US9128941, US9128889, US9128728, US9124641, US9122765, US9122538,
US9118720, US9116995, US9116905, US9113499, US9111254, US9111093, US9111004, US9110895,
US9106603, US9106601, US9105006, US9104659, US9104657, US9104656, US9103191, US9098722,
US9098698, US9092441, US9092416, US9092408, US9088556, US9087043, US9082127, US9081888,
US9081780, US9076342, US9075792, US9071818, US9069977, US9069754, US9069748, US9068432,
US9065793, US9063939, US9063528, US9060245, US9059978, US9059856, US9058627, US9058410,
US9058393, US9058323, US9058317, US9053326, US9053304, US9053180, US9053083, US9052962,
US9049222, US9047475, US9047283, US9043694, US9043430, US9043358, US9038187, US9037986,
US9037648, US9037637, US9031987, US9031955, US9031535, US9027017, US9026412, US9025622,
US9021438, US9021282, US9021030, US9020868, US9020831, US9015212, US9009848, US9009321,
US9009220, US9009006, US9003502, US9002801, US9002701, US8997197, US8996575, US8996453,
US8996361, US8990950, US8990877, US8990675, US8990360, US8990272, US8990238, US8990083,
US8984013, US8983952, US8983217, US8973140, US8972719, US8972612, US8972578, US8972295,
US8972078, US8966649, US8966637, US8966578, US8965817, US8959624, US8959122, US8959067,
US8959060, US8955107, US8954490, US8954459, US8950009, US8949553, US8949209, US8942849,
US8938534, US8938457, US8935789, US8935752, US8935274, US8930487, US8930320, US8930295,
US8930275, US8922807, US8922658, US8918424, US8918310, US8914887, US8914859, US8914528,
US8909943, US8909624, US8909558, US8904526, US8904226, US8904194, US8903870, US8903710,
US8903653, US8898464, US8898324, US8893237, US8892507, US8887301, US8887247, US8886797,
US8886766, US8886711, US8885653, US8881019, US8880697, US8880592, US8880198, US8879431,
US8874574, US8874526, US8869299, US8868859, US8868720, US8868049, US8863289, US8862999,
US8862975, US8862754, US8861727, US8856954, US8856894, US8856148, US8849955, US8849819,
US8849761, US8849757, US8849751, US8849739, US8844003, US8843893, US8843631, US8839391,
US8839138, US8838554, US8832541, US8832249, US8832246, US8832220, US8832148, US8831403,
US8826443, US8826210, US8826019, US8825473, US8819701, US8819471, US8819212, US8819208,
US8819028, US8818888, US8818336, US8813255, US8813192, US8812506, US8812457, US8812329,
US8811758, US8806592, US8806056, US8805995, US8805793, US8805774, US8800034, US8800031,
US8799920, US8799809, US8799462, US8799367, US8799330, US8799322, US8799287, US8799278,
US8799260, US8799175, US8793789, US8793258, US8793208, US8789153, US8788927, US8788816,
US8788290, US8782794, US8782209, US8782058, US8782055, US8782051, US8781953, US8781815,
US8775486, US8775484, US8775299, US8774317, US8769784, US8769699, US8769400, US8769131,
US8768921, US8763114, US8762793, US8762537, US8761744, US8755946, US8755342, US8752153,
US8751829, US8751537, US8751479, US8751456, US8751449, US8747115, US8745732, US8745699,
US8745194, US8738801, US8738584, US8738516, US8732455, US8732168, US8726405, US8726147,
US8726141, US8725739, US8725704, US8719944, US8719940, US8719905, US8719228, US8719053,
US8713661, US8713325, US8713009, US8712396, US8707302, US8707070, US8706728, US8706653,
US8706280, US8700604, US8694584, US8694548, US8694537, US8694534, US8693582, US8689034,
US8688603, US8688435, US8688253, US8683026, US8682848, US8677503, US8677214, US8676848,
US8676504, US8676122, US8671265, US8671080, US8671072, US8667602, US8667169, US8666731,
US8661502, US8661342, US8656180, US8656167, US8655858, US8655856, US8655848, US8650434,
US8645812, US8645532, US8645377, US8645372, US8645125, US8644166, US8640213, US8639616,
US8635703, US8635690, US8621638, US8621559, US8621271, US8621269, US8620136, US8615807,
US8615666, US8615413, US8612439, US8612390, US8607353, US8606910, US8606387, US8605778,
US8601498, US8595749, US8589503, US8589366, US8589344, US8587613, US8580319, US8578480,
US8578051, US8577883, US8572092, US8570275, US8566903, US8566358, US8565909, US8561167,
US8555079, US8554721, US8553065, US8549611, US8549601, US8548844, US8548777, US8544100,
US8543606, US8543556, US8539546, US8533830, US8533579, US8533516, US8533259, US8528018,
US8526985, US8521503, US8516058, US8515969, US8515924, US8510852, US8510306, US8504907,
US8504800, US8498619, US8495020, US8489599, US8489576, US8489439, US8489390, US8484069,
US8479008, US8478722, US8478629, US8473959, US8473690, US8473152, US8468358, US8468195,
US8467816, US8467273, US8464104, US8463786, US8463743, US8463741, US8462665, US8458774,
US8452764, US8447751, US8434001, US8428908, US8423560, US8423521, US8418230, US8417734,
US8417716, US8417506, US8412679, US8412673, US8412493, US8407805, US8407216, US8407189,
US8402359, US8402098, US8396880, US8396871, US8396836, US8386482, US8380668, US8380548,
US8375053, US8370327, US8364326, US8347247, US8345876, US8341534, US8341340, US8339959,
US8332638, US8332350, US8327458, US8327450, US8327384, US8327141, US8326361, US8321380,
US8320560, US8316139, US8312237, US8311580, US8301119, US8290899, US8285878, US8285700,
US8275752, US8275720, US8271802, US8271474, US8266708, US8266593, US8266438, US8265862,
US8256004, US8255731, US8255154, US8250041, US8250040, US8250039, US8244735, US8229937,
US8224879, US8224856, US8224843, US8223122, US8219565, US8219214, US8217945, US8214497,
US8209363, US8204480, US8196207, US8196030, US8190692, US8190662, US8171017, US8166161,
US8155036, US8150800, US8145636, US8145606, US8140463, US8140345, US8131458, US8130951,
US8126456, US8117242, US8117225, US8108502, US8108370, US8103110, US8099571, US8078515,
US8069021, US8064956, US8060536, US8045458, US8024670, US8005830, US8005507, US7996005,
US7970931, US7970792, US7958485, US7957577, US7949716, US7941764, US7933228, US7881736,
US7877402, US7869383, US7860735, US7843594, US7836011, US7831676, US7831567, US7813725,
US7809603, US7809534, US7801710, US7792783, US7788213, US7782882, US7779156, US7773609,
US7761428, US7760745, US7743047, US7669051, US7640589, US7523309, US2018218136,
US2018186332, US2018113617, US2018083772, US2018060741, US2018018355, US2017364595,
US2017318034, US2017315830, US2017277757, US2017272471, US2017206215, US2017206138,
US2017206137, US2017187725, US2017177877, US2017177726, US2017169360, US2017155748,
US2017147546, US2017132177, US2017126817, US2017116259, US2017109537, US2017102863,
US2017099269, US2017098100, US2017093972, US2017093931, US2017093590, US2017083308,
US2017075821, US2017063883, US2017060974, US2017060419, US2017047071, US2017031783,
US2017011227, US2016368481, US2016350717, US2016350397, US2016343087, US2016342572,
US2016328444, US2016327946, US2016314032, US2016300499, US2016278144, US2016274912,
US2016267451, US2016267157, US2016267071, US2016248900, US2016239810, US2016239524,
US2016239425, US2016239424, US2016227148, US2016224704, US2016224577, US2016210316,
US2016188964, US2016188894, US2016180467, US2016171243, US2016170963, US2016170405,
US2016162372, US2016156600, US2016154963, US2016147815, US2016147755, US2016142465,
US2016140363, US2016140361, US2016140292, US2016139843, US2016134660, US2016132709,
US2016127437, US2016125039, US2016117558, US2016117525, US2016117518, US2016110905,
US2016100011, US2016099931, US2016098608, US2016098459, US2016092920, US2016088003,
US2016070819, US2016065675, US2016062993, US2016055251, US2016055213, US2016041964,
US2016041846, US2016036927, US2016026753, US2016026723, US2016026620, US2016021133,
US2016012341, US2016011936, US2015379049, US2015363977, US2015363799, US2015356107,
US2015356090, US2015350862, US2015350223, US2015339496, US2015331835, US2015326681,
US2015324959, US2015309978, US2015304198, US2015293980, US2015288723, US2015288719,
US2015286701, US2015278847, US2015278387, US2015278340, US2015269721, US2015261847,

US2015248479, US2015244778, US2015242619, US2015242286, US2015237163, US2015222619, US2015220741, US2015220491, US2015215187, US2015213044, US2015207921, US2015186808, US2015186674, US2015178502, US2015178389, US2015172320, US2015172311, US2015169782, US2015169585, US2015161546, US2015161409, US2015161236, US2015161102, US2015156206, US2015154420, US2015145991, US2015143549, US2015143117, US2015142730, US2015127593, US2015127348, US2015120895, US2015120359, US2015106288, US2015100573, US2015096036, US2015096033, US2015089663, US2015082224, US2015081370, US2015067783, US2015059004, US2015058460, US2015052415, US2015047037, US2015046549, US2015046399, US2015039565, US2015033206, US2015032817, US2015026821, US2015026208, US2015026127, US2015019673, US2015019557, US2015007323, US2015007021, US2015006494, US2014380481, US2014380278, US2014379600, US2014373108, US2014373104, US2014372460, US2014372377, US2014371957, US2014365426, US2014362418, US2014359463, US2014358923, US2014351894, US2014351421, US2014351278, US2014351252, US2014351201, US2014351158, US2014344645, US2014341109, US2014340717, US2014337937, US2014337410, US2014337243, US2014329528, US2014324905, US2014317407, US2014317075, US2014310265, US2014298465, US2014298243, US2014297725, US2014283139, US2014282399, US2014281713, US2014281300, US2014280384, US2014280220, US2014280214, US2014280091, US2014279640, US2014258384, US2014258294, US2014250534, US2014248039, US2014245452, US2014245261, US2014245136, US2014244615, US2014244613, US2014244364, US2014236953, US2014228976, US2014222966, US2014222866, US2014219295, US2014208201, US2014207784, US2014207772, US2014205096, US2014205084, US2014201486, US2014201299, US2014192975, US2014172549, US2014170601, US2014165136, US2014164774, US2014164570, US2014164343, US2014156646, US2014143425, US2014137208, US2014136832, US2014136805, US2014136717, US2014122984, US2014122256, US2014114993, US2014114563, US2014108474, US2014101184, US2014096199, US2014095521, US2014088932, US2014086102, US2014081892, US2014075032, US2014074762, US2014074258, US2014068706, US2014068696, US2014068448, US2014067369, US2014059075, US2014059042, US2014053000, US2014046469, US2014032921, US2014032568, US2014025822, US2014025645, US2014019214, US2014012866, US2014012865, US2014006950, US2013326498, US2013325533, US2013318424, US2013304512, US2013297559, US2013283189, US2013283056, US2013282617, US2013275466, US2013268258, US2013265044, US2013263277, US2013262523, US2013262466, US2013262418, US2013262399, US2013262382, US2013262154, US2013254553, US2013254551, US2013254029, US2013250777, US2013232132, US2013232131, US2013231781, US2013218339, US2013212553, US2013212376, US2013212111, US2013205215, US2013204993, US2013198323, US2013191326, US2013191139, US2013191138, US2013191137, US2013184879, US2013179807, US2013179625, US2013179394, US2013167244, US2013163808, US2013159529, US2013159352, US2013159263, US2013156180, US2013155424, US2013145478, US2013124640, US2013124401, US2013117650, US2013117225, US2013111341, US2013110877, US2013104181, US2013103682, US2013097308, US2013091526, US2013091126, US2013086460, US2013085999, US2013085785, US2013080449, US2013080411, US2013080407, US2013080268, US2013073994, US2013073549, US2013067018, US2013055078, US2013054239, US2013053986, US2013051476, US2013042310, US2013041899, US2013036364, US2013036363, US2013031606, US2013024769, US2013024512, US2013019235, US2013013128, US2013007883, US2013007140, US2013006665, US2012324531, US2012317186, US2012310940, US2012304082, US2012303648, US2012303636, US2012303548, US2012294546, US2012284780, US2012277936, US2012266254, US2012259901, US2012258437, US2012254297, US2012254269, US2012246719, US2012240243, US2012239631, US2012239415, US2012239386, US2012233535, US2012233209, US2012233157, US2012233103, US2012231764, US2012221931, US2012210436, US2012210171, US2012203765, US2012203759, US2012198568, US2012198362, US2012192059, US2012191700, US2012191621, US2012174232, US2012173752, US2012173612, US2012173497, US2012167222, US2012166967, US2012166737, US2012166455, US2012159178, US2012158789, US2012158746, US2012158693, US2012151597, US2012151025, US2012150771, US2012143912, US2012136960, US2012131220, US2012131189, US2012131020, US2012131012, US2012130525, US2012124129, US2012117386, US2012117312, US2012113265, US2012109625, US2012102542, US2012102063, US2012101985, US2012096109, US2012078965, US2012072969, US2012072509, US2012072204, US2012051405, US2012042361, US2012041985, US2012041783, US2012030767, US2012030199, US2012030168, US2012005165, US2011321124, US2011320804, US2011320480, US2011320452, US2011317983, US2011314346, US2011314253, US2011314135, US2011314121, US2011314045, US2011313751, US2011307523, US2011307485, US2011289085, US2011286594, US2011276537, US2011271137, US2011270844, US2011264716, US2011258333, US2011246652, US2011246541, US2011246528, US2011238935, US2011238260, US2011238235, US2011219424, US2011219315, US2011219205, US2011219106, US2011219081, US2011219045, US2011209156, US2011209147, US2011208723, US2011208513, US2011202568, US2011191693, US2011185405, US2011185138, US2011185056, US2011184877, US2011184810, US2011184545, US2011179472, US2011179352, US2011179028, US2011178948, US2011161378, US2011161069, US2011158469, US2011154181, US2011153751, US2011153539, US2011153292, US2011145836, US2011138016, US2011131220, US2011131141, US2011131034, US2011130158, US2011130087, US2011125716, US2011119454, US2011119243, US2011113048, US2011107407, US2011106773, US2011106632, US2011099462, US2011093768, US2011093432, US2011088091, US2011087748, US2011078204, US2011078199, US2011078003, US2011077936, US2011072240, US2011072115, US2011060766, US2011055680, US2011055186, US2011055109, US2011054854, US2011047625, US2011047050, US2011040724, US2011035811, US2011030063, US2011022642, US2011016226, US2011010227, US2011004671, US2010332818, US2010332479, US2010325531, US2010324821, US2010321197, US2010318575, US2010318541, US2010318500, US2010318375, US2010318339, US2010306340, US2010306255, US2010306254, US2010299273, US2010280856, US2010274786, US2010274644, US2010268528, US2010263060, US2010262577, US2010255822, US2010250484, US2010241980, US2010233301, US2010229246, US2010228786, US2010223351, US2010223249, US2010223236, US2010217664, US2010211741, US2010211545, US2010205565, US2010199089, US2010192220, US2010169371, US2010161290, US2010153113, US2010146301, US2010146298, US2010146005, US2010144331, US2010138812, US2010138416, US2010131357, US2010131337, US2010131085, US2010125531, US2010122343, US2010121702, US2010114863, US2010114719, US2010114701, US2010114690, US2010114680, US2010107189, US2010107094, US2010106672, US2010100376, US2010094844, US2010083240, US2010082576, US2010082575, US2010082560, US2010076866, US2010076838, US2010076822, US2010071024, US2010049803, US2010049583, US2010040227, US2010031361, US2010030746, US2010023524, US2010020718, US2010010969, US2010004020, US2009328070, US2009323681, US2009313209, US2009307053, US2009299837, US2009285474, US2009265231, US2009265191, US2009249492, US2009248707, US2009235167, US2009228354, US2009227289, US2009227243, US2009216855, US2009210408, US2009208910, US2009208142, US2009198665, US2009197579, US2009196529, US2009178144, US2009177509, US2009172072, US2009164250, US2009158146, US2009158052, US2009157812, US2009154476, US2009150388, US2009132587, US2009132524, US2009132479, US2009119370, US2009119339, US2009113548, US2009113468, US2009112924, US2009112718, US2009112717, US2009112715, US2009112700, US2009112698, US2009112692, US2009112460, US2009100184, US2009094320, US2009092139, US2009089234, US2009089227, US2009089123, US2009089032, US2009089031, US2009089030, US2009089029, US2009089027, US2009077499, US2009077472, US2009073994, US2009073993, US2009070663, US2009070192, US2009055467, US2009055433, US2009044254, US2009043851, US2009042590, US2009041308, US2009037577, US2009031400, US2009025090, US2009018922, US2009016594, US2009012972, US2008306984, US2008306926, US2008281817, US2008275748, US2008263565, US2008263297, US2008263108, US2008261577, US2008249977, US2008244704, US2008243952, US2008243950, US2008201187, US2008195772, US2008177691, US2008172746, US2008172393, US2008090597, US2008071727, US2008071726, US2008040465, US2008032742, US2008015996, US2007220143, US2007174766, US2007021111, US2006212482, US2005138110,

US10182031, US10182013, US10181953, US10178445, US10176251, US10176211, US10176192, US10172068, US10170840, US10169761, US10169599, US10169549, US10169315, US10169290, US10169000, US10168696, US10168695, US10168693, US10165405, US10165058, US10164901, US10163005, US10162975, US10162840, US10158656, US10157526, US10157515, US10157200, US10157199, US10157175, US10157109, US10157092, US10157002, US10154493, US10152603, US10152515, US10152504, US10152485, US10152319, US10148717, US10148572, US10148530, US10148016, US10146622, US10144036, US10142377, US10142276, US10142174, US10142086, US10142010, US10141975, US10140835, US10140627, US10139820, US10136434, US10135948, US10135907, US10135147, US10135146, US10135145, US10133511, US10129368, US10129365, US10129230, US10129023, US10127735, US10127385, US10127249, US10122692, US10122689, US10122624, US10121165, US10120998, US10120579, US10116605, US10116440, US10115155, US10115079, US10114906, US10114766, US10108706, US10108306, US10104097, US10104041, US10103989, US10103876, US10103801, US10103422, US10102543, US10102536, US10102307, US10102264, US10101908, US10101801, US10099561, US10098051, US10097616, US10097582, US10097521, US10097346, US10096881, US10095728, US10095704, US10091787, US10091330, US10091235, US10091218, US10091012, US10090998, US10090606, US10090601, US10090594, US10089655, US10089651, US10089633, US10089332, US10084764, US10084753, US10083624, US10079844, US10079661, US10078868, US10078763, US10078062, US10075521, US10075482, US10075446, US10075402, US10075401, US10075386, US10074890, US10074886, US10074108, US10073963, US10069943, US10069933, US10069877, US10069729, US10069535, US10069185, US10068577, US10068493, US10068172, US10068103, US10067948, US10067940, US10067921, US10067829, US10065631, US10063584, US10063414, US10063280, US10061779, US10061751, US10057287, US10057226, US10055490, US10051630, US10051629, US10051483, US10051071, US10050917, US10050697, US10049414, US10049150, US10048943, US10045327, US10044800, US10044762, US10044503, US10044409, US10043016, US10043001, US10042672, US10038726, US10038633, US10037428, US10037146, US10033837, US10033701, US10033642, US10033639, US10033108, US10033107, US10032191, US10032045, US10032032, US10027701, US10027628, US10027578, US10027398, US10027397, US10025920, US10021222, US10021144, US10020844, US10020587, US10019523, US10019507, US10019426, US10019226, US10019138, US10013804, US10013580, US10013576, US10013564, US10009901, US10009446, US10009377, US10009297, US10009266, US10009219, US10009067, US10009065, US10009063, US10007840, US10007650, US10003673, US10003520, US10003507, US10002179, US10002155, US10002154, US10002153, US10002126, TWI636690, TWI605659, TWI556180, TWI378344, TWI363974, RU2639655, RU2635027, RU2540832, KR20150018863, KR20130109998, KR101778901, KR101712256, KR101668147, JP2017201546, JP2016509317, GB2515193, GB2505801, FR3064379, EP3300007, EP3248108, EP3133507, EP3080953, EP3080953, EP3069242, EP2843579, EP2668564, EP2668564, EP2609506, DE112014000408, CN105956200, CN105677914, CN105653403, CN105491006, CN105491006, CN105446983, CN105027498, CN105027498, CN104935578, CN104901983, CN104798082, CN104756460, CN104756460, CN104462550, CN104462550, CN104067265, CN104011709, CN104007956, CN103902585, CN103583030, CN103441986, CN103270520, CN103052979, CN102985919, CN102939594, CN102918551, CN102893278, CN102867058, CN102867058, CN102753939, CN102567454, CN102567454, CN102546730, CN102160029, CN102012985, AU2014218538, AU2011212934,

Abstract:
The present invention is a method of organizing and processing data in a distributed computing system. The invention is also implemented as a computer program on a computer medium and as a distributed computer system. Software modules can be configured as hardware. The method and system organizes select content which is important to an enterprise operating said distributed computing system. The select content is represented by one or more predetermined words, characters, images, data elements or data objects. The computing system has a plurality of select content data stores for respective ones of a plurality of enterprise designated categorical filters which include content-based filters, contextual filters and taxonomic classification filters, all operatively coupled over a communications network. A data input is processed through at least one activated categorical filter to obtain select content, and contextually associated select content and taxonomically associated select content as aggregated select content. The aggregated select content is stored in the corresponding select content data store. A data process from the group of data processes including a copy process, a data extract process, a data archive process, a data distribution process and a data destruction process is associated with the activated categorical filter and the method and system applies the associated data process to a further data input based upon a result of that further data being processed by the activated categorical filter utilizing the aggregated select content data.

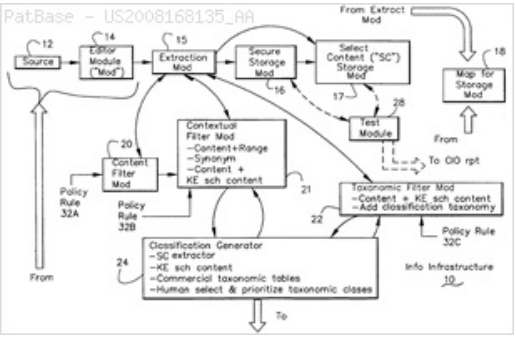

29) Family number: 30131783 (US2001054461A)

© PatBase

Title: Airbag inflation gas generation via a dissociating material and the moderation thereof

Priority:

US19960632698	19960415	US19970935014	19970922	US19970935016	19970922
US19980005274	19980109	US19980027020	19980220	US19980112838	19980710
US19980112838	19980710	WO1998US19790	19980922	WO1998US19755	19980922
WO1999US02773	19990210	US19990276942	19990326	US20000497049	20000202
US20000495975	20000202	WO2000US06981	20000317	US20000605104	20000628
US20000724295	20001128	WO2001US03211	20010131		

Family:

Publication number	Publication date	Application number	Application date
AU199894992 A1	19990412	AU19980094992	19980922
AU199895749 A1	19990412	AU19980095749	19980922
AU199932882 A1	19990906	AU19990032882	19990210
AU200038908 A1	20001016	AU20000038908	20000317
AU200038908 A5	20001016	AU20000038908	20000317
AU2001234701 AA	20010814	AU20010234701	20010131
BRPI9812827 A	20000808	BR1998PI12827	19980922

CN1161246 C	20040811	CN19988011417	19980922
CN1279638 A	20010110	CN19988011417	19980922
DE60115204 D1	20051229	DE20016015204	20010131
DE60115204 D1	20051229	DE20016015204T	20010131
DE60115204 T2	20060803	DE20016015204T	20010131
DE69736794 D1	20061123	DE19976036794	19970410
DE69736794 T2	20070809	DE19976036794T	19970410
DE69836913 D1	20070308	DE19986036913	19980922
DE69836913 D1	20070308	DE19986036913T	19980922
DE69836913 T2	20071018	DE19986036913T	19980922
EP0802091 A1	19971022	EP19970302461	19970410
EP0802091 B1	20061011	EP19970302461	19970410
EP1015282 A1	20000705	EP19980949422	19980922
EP1015282 A4	20050824	EP19980949422	19980922
EP1019269 A1	20000719	EP19980948415	19980922
EP1019269 A4	20041117	EP19980948415	19980922
EP1019269 B1	20070117	EP19980948415	19980922
EP1252125 A1	20021030	EP20010906841	20010131
EP1252125 B1	20051123	EP20010906841	20010131
JP10035401 A2	19980210	JP19970097557	19970415
JP2001517575 T2	20011009	JP20000512713T	19980922
JP2001517576 T2	20011009	JP20000512714T	19980922
JP2003521425 T2	20030715	JP20010556807T	20010131
JP2902377 B2	19990607	JP19970097557	19970415
JP4087558 B2	20080521	JP20000512714T	19980922
JP4108925 B2	20080625	JP20000512713T	19980922
US2001054461 AA	20011227	US20000495975	20000202
US5669629 A	19970923	US19960632698	19960415
US5884938 A	19990323	US19970935016	19970922
US5941562 A	19990824	US19970935014	19970922
US6117254 A	20000912	US19980027020	19980220
US6170867 BA	20010109	US19980005274	19980109
US6221186 BA	20010424	US19990276942	19990326
US6244623 BA	20010612	US20000497049	20000202
US6289814 BA	20010918	US19980112838	19980710
US6332404 BA	20011225	US20000495975	20000202
US6634302 BA	20031021	US20000724295	20001128
US6673173 BA	20040106	US20000605104	20000628
WO0002749 A2	20000120	WO1999US15466	19990709
WO0002749 A3	20000413	WO1999US15466	19990709
WO0058134 A1	20001005	WO2000US06981	20000317
WO0058134 C2	20011101	WO2000US06981	20000317
WO0156954 A1	20010809	WO2001US03211	20010131
WO9915376 A1	19990401	WO1998US19755	19980922
WO9915377 A1	19990401	WO1998US19790	19980922
WO9942328 A2	19990826	WO1999US02773	19990210
WO9942328 A3	20000316	WO1999US02773	19990210

Probable Assignee: AUTOLIV ASP INC

Assignee(s):(std)**:** AUTOLIV ASP ; AUTOLIV ASP INC ; GREEN DAVID J ; MENDENHALL IVAN V ; MOORE WALTER A ; MORTON INT INC ; RINK KARL K ; THIOKOL MORTON INC

Assignee(s): SAIOKORU CORP ; MORTON INTERNATIONAL INC ; MORTON THIOKOL INC ; MORTON INT INC AN INDIANA CORP ; MORTON INT

Inventor(s):(std)**:** CLARK MARCUS T ; GREEN DAVID J ; HARRIS BRADLEY D ; MENDENHALL IVAN V ; MENDENHALL V ; MOORE A ; MOORE WALTER A ; PARKINSON DAVID W ; RICHARDSON WILLIAM B ; RINK KARL K ; RINK LINDA M ; SMITH BRADLEY W ; SMITH ROBERT G ; TAYLOR ROBERT D ; SMITH W ; RINK K ; MARCUS T CLARK ; LEWIS ROBERT E ; LANG GREGORY J ; KARL K RINK ; GREEN J ; DAVID J GREEN ; CLARK T ; BRADLEY W SMITH ; SMITH B W ; RINK K K ; GREEN D J

Inventor(s): DJGREEN ; DJ GREEN ; BWSMITH ; BW SMITH ; LINDA M RINK ; KAARU KEE RINKU ; KKRINK ; IVAN V MENDENHALL ; RINK KK ; B W SMITH ; D J GREEN ; K K RINK ; WALTER A MOORE ; WILLIAM B RICHARDSON ; ROBERT E LEWIS

Agent(s): TSURUTA JUNICHI; NISHIYAMA MASAYA; HIGUCHI SOTOJI; ISHIDA TAKASHI

Designated states: AE AG AL AM AT AU AZ BA BB BE BF BG BJ BR BY BZ CA CF CG CH CI CM CN CR CU CY CZ DE DK DM DZ EE ES FI FR GA GB GD GE GH GM GN GR GW HR HU ID IE IL IN IS IT JP KE KG KP KR KZ LC LK LR LS LT LU LV MA MC MD MG MK ML MN MR MW MX MZ NE NL NO NZ PL PT RO RU SD SE SG SI SK SL SN SZ TD TG TJ TM TR TT TZ UA UG UZ VN YU ZA ZW

International class (IPC 8-9): B01J7/00 B60R21/26 B60R21/263 B60R21/264 B60R21/272 B60R21/276 C06B23/00 C06C9/00 C06D5/00 C06D5/04 C06D5/06 C06D5/10 G01M3/22 (Advanced/Invention);
B60R21/26 B60R21/263 B60R21/264 (Advanced/Non-invention);
B01J7/00 B60R21/26 C06B23/00 C06C9/00 C06D5/00 G01M3/20 (Core/Invention);
B60R21/26 (Core/Non-invention)

International class (IPC 1-7): B01J7/00 B60R21/26 B60R21/28 C06B29/08 C06B31/00 C06B33/06 C06B35/00 C06B47/00 C06B47/04 C06D5/00 C06D5/04 C06D5/06

CPC: B60R21/2644 B60R2021/26094 B60R21/264 B60R21/272 B60R2021/2633 B60R2021/2725 C06B23/008 C06D5/00 B60R2021/26041 C06D5/04 C06D5/06 C06C9/00 C06D5/10 G01M3/226

European class: B60R21/264 B60R21/264C B60R21/26B2 B60R21/26D B60R21/26D2 B60R21/272 C06B23/00G C06C9/00 C06D5/00 C06D5/04 C06D5/06 C06D5/10 G01M3/22G L60R21/263L L60R21/264 L60R21/26K3 L60R21/26V L60R21/272F

US class: 102/288 102/289 102/530 102/531 149/1 149/109.6 149/35 149/45 149/74 280/736 280/737 280/740 280/741 280/742

Classification Explorer

Cited documents: WO9806682 A2, WO9311971 A1, WO0058134 A1, WO0002749 A2, US9112838 A, US9005274 A, US8935014 A, US8632698 A, US651132 A, US6332404 BA, US6241281 BA, US6231702 BA, US6221186 BA, US6143104 A, US6132538 A, US6117254 A, US6103030 A, US6098548 A, US6096147 A, US6083331

A, US6077372 A, US6077371 A, US6062599 A, US6039820 A, US5970703 A, US5964479 A, US5941562 A, US5931495 A, US5924728 A, US5893583 A, US5890735 A, US5884938 A, US5836610 A, US5821448 A, US5806885 A, US5803493 A, US5803492 A, US5786543 A, US5765866 A, US5763817 A, US5762369 A, US5756930 A, US5756924 A, US5735118 A, US5725699 A, US5713595 A, US5683104 A, US5678857 A, US5673935 A, US5673933 A, US5672843 A, US5669692 A, US5669629 A, US5668345 A, US5655790 A, US5649720 A, US5630619 A, US5623115 A, US5620205 A, US5613703 A, US5607181 A, US5592812 A, US5586386 A, US5582806 A, US5582428 A, US5580086 A, US5571988 A, US5542704 A, US5536339 A, US5531473 A, US5518268 A, US5514230 A, US5504288 A, US5494312 A, US5487798 A, US5483896 A, US5470104 A, US5467714 A, US5466313 A, US5464248 A, US5452661 A, US5439537 A, US5429691 A, US5428988 A, US5411290 A, US5404813 A, US5403036 A, US5351988 A, US5348344 A, US5330730 A, US5320692 A, US5263740 A, US5230532 A, US5230531 A, US5230287 A, US5171385 A, US5139588 A, US5101730 A, US5076607 A, US5066039 A, US5060973 A, US5033390 A, US5031932 A, US5024160 A, US5002308 A, US4998751 A, US4994125 A, US4896898 A, US4798142 A, US4358998 A, US4291533 A, US4050483 A, US3999380 A, US3986456 A, US3985375 A, US3964256 A, US3959042 A, US3958949 A, US3931374 A, US3898048 A, US3884497 A, US3862866 A, US3786843 A, US3674059 A, US3664134 A, US3647393 A, US3109374 A, US2995987 A, US273209 A, US2403932 A, US2334211 A, US1805721 A, US1056560 A, JP9175315, JP9175312, JP9052568, JP9011844, JP8040178, JP7182956, JP6206513, JP59130530, JP56088804, JP5278554, FR2111442 A5, EP0792776 A1, EP0757975 A1, EP0657728 A2, DE4303169 C1, DE4303169 A1, DE2709733 A1, DE19700713 A1, DE19541797 A1, DE19524094 A1,

Forward Citations: WO9942328, WO9942328, WO13027545, WO12101131, WO11146236, WO11146236, WO11131590, WO10027621, WO09011769, WO07082689, WO03101791, WO03051685, WO03045739, WO03035436, WO03016243, WO03016243, WO03016098, WO03016098, WO0212020, WO0212020, WO02070309, WO0156954, WO0058134, WO0048967, WO0002749, WO0002749, US9885628, US9834169, US9651447, US9493137, US9295935, US9193639, US9051224, US9051223, US9003975, US8979122, US8979121, US8960718, US8844967, US8815029, US8808476, US8720945, US8671842, US8657333, US8622419, US8419057, US8376400, US8371611, US8221565, US8162350, US8137771, US8136452, US8057611, US8057610, US7987792, US7967333, US7950691, US7934749, US7883108, US7878535, US7814838, US7806954, US7806436, US7789018, US7762585, US7758709, US7669893, US7667604, US7654565, US7537240, US7520531, US7438315, US7431336, US7413217, US7393008, US7380820, US7367584, US7360788, US7350819, US7343862, US7293798, US7290797, US7275760, US7267365, US7252303, US7243946, US7237801, US7222880, US7192055, US7192052, US7185588, US7165546, US7163230, US7156025, US7134689, US7104288, US7097203, US7080854, US7059633, US6979021, US6976704, US6962365, US6942743, US6941868, US6913285, US6883830, US6818082, US6808202, US6805377, US6779811, US6764097, US6755438, US6752421, US6739621, US6726243, US6719016, US6715371, US6709011, US6676157, US6673173, US6666476, US6652683, US6651565, US6635131, US6634302, US6629703, US6616183, US6607214, US6585294, US6572143, US6554315, US6547277, US6543806, US6536798, US6530264, US6516726, US6347627, US6332404, US6289814, US6286864, US6254129, US6244623, US6244622, US6238500, US6233908, US6231078, US6221186, US6206418, US6206414, US6170867, US6164695, US6145877, US6129380, US6117254, US6096147, US6086094, US6007097, US5979936, US5964479, US5887893, US2014144343, US2014117652, US2013313812, US2013055919, US2013026742, US2012291656, US2012031294, US2011221174, US2011169252, US2011025030, US2010127486, US2010116384, US2010096844, US2010071581, US2010052299, US2010031843, US2010001497, US2009267334, US2009255611, US2009044886, US2009020992, US2009020197, US2008111356, US2008061541, US2007296190, US2007248511, US2007200325, US2007095035, US2007085312, US2007001438, US2006290108, US2006273564, US2006261584, US2006255577, US2006157961, US2006131866, US2006113780, US2006091660, US2006062945, US2006055160, US2006043716, US2006037662, US2006022444, US2006017483, US2006017270, US2006005734, US2005280252, US2005280251, US2005275203, US2005263994, US2005263993, US2005250059, US2005230950, US2005230949, US2005218638, US2005218637, US2005200103, US2005189755, US2005189750, US2005146123, US2005142404, US2005123406, US2005116454, US2005104349, US2005077713, US2005073138, US2005062272, US2005029787, US2005011598, US2004231770, US2004222620, US2004183292, US2004174007, US2004155444, US2004124619, US2004084885, US2004084884, US2004060469, US2004049945, US2004041382, US2004009107, US2003222444, US2003151241, US2003111832, US2003098572, US2003085559, US2003075909, US2003075904, US2003042719, US2001024030, US10005420, KR100953780, JP5707328, JP5138859, JP4234322, JP2017065506, JP2012501899, JP2011521846, JP2011502935, JP2010089092, JP2009234576, JP2007521999, JP2007197009, JP2006502045, JP2005526586, JP2003025951, JP2002120687, JP2001526148, FR2970690, FR2959007, EP2594545, EP2594545, EP2418005, EP1893453, EP1867532, EP1449724, EP1322505, EP1322505, EP1322505, EP1171404, EP1035991, DE10333173, DE10333173, DE102016118089, DE102008022755, DE102008022755, CN106553611, CN105777459, CN105777459, CN103313882, CN103313882, CN103298663, CN103298663, CN102905943, CN102897136, CN102143865, CN102143865, AU2003203833,

Abstract:
An inflator apparatus for inflating an inflatable device and a method are provided wherein a combination of a dissociative gas source material and at least one unreactive dissociation reaction modifier is stored at least partially in liquefied form with the reaction modifier effective to moderate at least one of the temperature and concentration of the at least one gas source material upon the dissociation of at least a portion of the at least one gas source material.

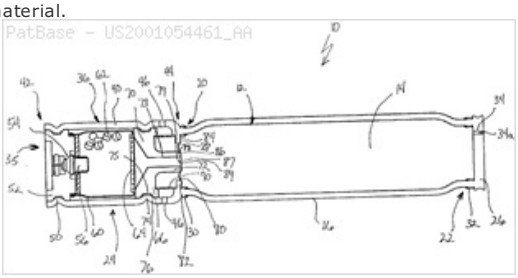

30) Family number: 47904835 (US2011041718A) © PatBase

Title: SYSTEMS AND METHODS FOR CHEMICAL AND/OR MECHANICAL REMEDIATION OF NITRO COMPOUNDS AND NITRATE ESTERS

Priority: US20090220020P 20090624 EP20090382190 20091001 ES20090382190T 20091001 EP20100725482 20100624 US20100822730 20100624 WO2010EP59015 20100624

Family:

Publication number	Publication date	Application number	Application date
CA2766698 AA	20101229	CA20102766698	20100624
CL2011003292 A1	20120615	CL20110003292	20111223
CL52818 B	20160726	CL20110003292	20111223
DE602009048542 D1	20171109	DE200960048542T	20091001

ECSP12011599 A	20120629	EC2012SP11599	20120112
EP2305624 A1	20110406	EP20090382190	20091001
EP2305624 B1	20170927	EP20090382190	20091001
EP2445852 A1	20120502	EP20100725482	20100624
ES2654325 T3	20180213	ES20090382190T	20091001
MX2012000186 A1	20120612	MX20120000186	20100624
PE13692012 A1	20121015	PE20110002166	20100624
PL2305624 T3	20180530	PL20090382190T	20091001
PT2305624 T	20180104	PT20090382190T	20091001
TR201721354 T4	20180122	TR20170021354T	20091001
US2011041718 AA	20110224	US20100822730	20100624
US8585841 BB	20131119	US20100822730	20100624
WO10149750 A1	20101229	WO2010EP59015	20100624
ZA201200055 A	20130327	ZA20120000055	20100624

Probable Assignee: MAXAMCORP HOLDING SL

Assignee(s):(std)**:** BEITIA GOMEZ DE SEGURA FERNANDO MARIA ; BOTIJA GONZALEZ JOSE MANUEL ; GOMEZ DE SEGURA FERNANDO MARIA BEITIA ; GONZALEZ JOSE MANUEL BOTIJA ; HARRIS DELANA ; LUBBE CARL HERMANUS ; MAXAMCORP HOLDING S L ; MAXAMCORP HOLDING SL ; MAXAMCORP HOLDINGS S L

Assignee(s): MAXAMCORP HOLDINGS SL

Inventor(s):(std)**:** LUBBE CARL HERMANUS ; BOTIJA GONZALEZ JOSE MANUEL ; BEITIA GOMEZ DE SEGURA FERNANDO MARIA ; HARRIS DELANA ; GONZALEZ JOSE MANUEL BOTIJA ; GOMEZ DE SEGURA FERNANDO MARIA BEITIA ; JOSE MANUEL BOTIJA GONZALEZ ; SEGURA FERNANDO MARIA BEITIA GOMEZ DE ; FERNANDO MARI A BEITIA GOMEZ DE SEGURA

Inventor(s): HARRIS DELANA BITIJA GONZALEZ JOSE MANUEL BEITIA GOMEZ DE SEGURA FERNANDO MARIA ; LUBBE ; CARL HERMANUS ; BOTIJA GONZALEZ JOSE MANUEL E 48960 ; BEITIA GOMEZ DE SEGURA FERNANDO MARIA E 28042 ; LUBBE CARL HERMANUS HARRIS DELANA ; BOTIJA GONZALEZ JOSE MANUEL BEITIA GOMEZ DE SEGURA FERNANDO MARIA ; DELANA HARRIS ; FERNANDO MARIA BEITIA GOMEZ DE SEGURA ; CARL HERMANUS LUBBE

Agent(s): PERRY AND CURRIER; JOHANSSON; ABG PATENTES S L; ABG PATENTES SL; ERKAN SEVINC; KIRTON AND MCCONKIE; CRAIG; KIRTON MCCONKIE; ARIAS SANZ JUAN

Designated states: AE AG AL AM AO AT AU AZ BA BB BE BF BG BH BJ BR BW BY BZ CA CF CG CH CI CL CM CN CO CR CU CY CZ DE DK DM DO DZ EC EE EG ES FI FR GA GB GD GE GH GM GN GQ GR GT GW HN HR HU ID IE IL IN IS IT JP KE KG KM KN KP KR KZ LA LC LI LK LR LS LT LU LV LY MA MC MD ME MG MK ML MN MR MT MW MX MY MZ NA NE NG NI NL NO NZ OM PE PG PH PL PT RO RS RU SC SD SE SG SI SK SL SM SN ST SV SY SZ TD TG TH TJ TM TN TR TT TZ UA UG US UZ VC VN ZA ZM ZW

International class (IPC 8-9): A62D A62D3/02 A62D3/30 C06B C06B21/00 C06B23/00 C06B45/04 C06B45/10 D03D23/00 D03D43/00 F42B F42B33/06 F42B99/00 (Advanced/Invention);
A62D C06B F42B (Subclass/Invention)

CPC: C06B21/005 C06B21/0091 C06B23/001 C06B45/10 F42B12/20 F42B33/06 F42C15/44 F42D5/04

European class: C06B21/00C4 C06B21/00F C06B23/00B C06B45/10 F42B12/20 F42B33/06 F42C15/44 F42D5/04

US class: 102/200 102/293 102/293S 149/108.2 149/108.4 149/109.4 149/109.6 149/17 149/17S 149/19.1 149/19.100S 149/19.5 149/19.500S 149/19.91 149/19.910S 86/1.1 86/1.100S

Classification Explorer

Cited documents: WO9932636 A1, WO9911587 A1, WO9703201 A1, WO09094716 A1, WO09094715 A1, WO09094714 A1, WO0206855 A2, US7240618 BB, US6881283 BB, US6651564 BA, US6388164 BA, US6238501 BA, US6120627 A, US5716557 A, US5587553 A, US4718953 A, US4325759 A, US4057442 A, US4018636 A, US4000021 A, US3358601 A, US3358600 A, US3322066 A, US2009038496 AA, US2006054257 AA, US2003173008 AA, JP2001349700 A2, ES2125193 AA, ES2083327 AA, ES2064287 AA, ES2046140 AA,

Forward Citations: WO17105571, US9714199, US8850984, US2017081255, US2011155500, US10074925,

Abstract:
Systems and methods for chemoremediation or mechanical destruction of undetonated explosive materials. An explosive apparatus contains an explosive material in close proximity to a chemical reagent selected for its chemoremediative properties. A barrier is interposed between the explosive material and the chemical reagent to delay the chemoremediation of the explosive material. Alternatively a water expandable material may be incorporated into the explosive material, whereby upon exposure to moisture the water absorbing material will expand sufficiently to fragment the explosive material into initiation insensitive particles. Initiation insensitivity is achieved by incorporation of water, which acts as a desensitizing agent as well as fragmenting the explosive material into particles sufficiently small that they are below the critical diameter for explosive initiation. The present invention also relates to self-degradable, shaped explosive formulations, comprising an explosive material and a water expandable material.

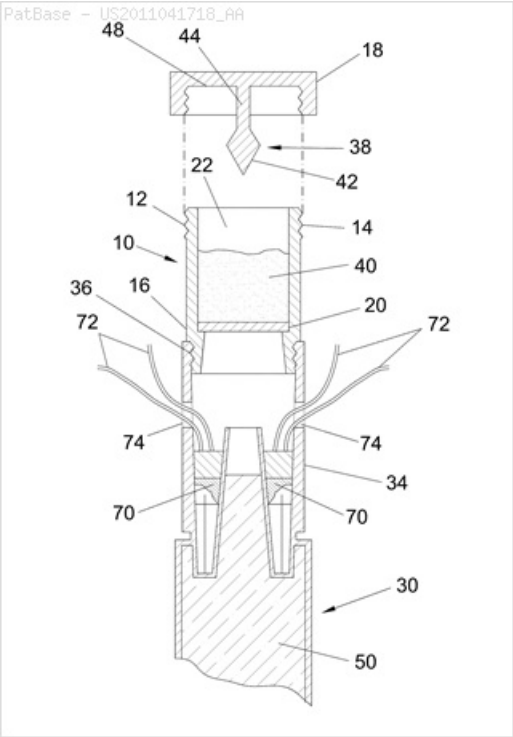

31) Family number: 42243851 (IN00251KO2004A) © PatBase

Title: A METHOD FOR MANUFACTURING AN IMPROVED WATER-IN-OIL EMULSION EXPLOSIVE

Family:

Publication number	Publication date	Application number	Application date
IN00251KO2004 A	20061006	IN2004KO00251	20040517

Probable Assignee: ICI INDIA LTD

Assignee(s): ICI INDIA LTD

Inventor(s): A V MUKKOLATH ; B K MISHRA ; P K GHOSH ; SATHEESH KUMAR ; V S PATHAK

International class (IPC 1-7): C06G45/00

Abstract:
A method for manufacturing an improved water-in - oil emulsion explosive with higher rigidity and less tackiness, the method comprising steps of: a) adding one or more convention oxidizer salts to a blend consisting of one or more emulsifying agents of the kind such as herein described and a conventional fuel phase; b) subjecting the blend form step -a) emulsification in the manner such as herein described.

32) Family number: 33193858 (US2008047418A) © PatBase

Title: METHODS AND APPARATUS FOR PROVIDING BALLISTIC PROTECTION

Priority:

US20040634120	20041208	US20040634120P	20041208	US20050689531P	20050613
US20050296402	20051208	WO2005US44482	20051208	US20070978663	20071030
US20070979309	20071101	US20070979310	20071101	US20070979311	20071101
US20080064851P	20080331	US20090385126	20090321	US20090385126	20090331
US20110237691	20110920	US20110273689	20111014	US20130753853	20130130
US20130779658P	20130313	US20140999597	20140312	US20150752029	20150626
US20160262718	20160912				

Family:

Publication number	Publication date	Application number	Application date
CA2595837 AA	20070724	CA20052595837	20051208
EP2115381 A2	20091111	EP20050857060	20051208
EP2115381 A4	20110907	EP20050857060	20051208
IL183789 A0	20070920	IL20070183789	20070607
IL183789 A1	20120830	IL20050183789	20051208
IL211861 A0	20110531	IL20110211861	20110322
IL211861 A1	20120830	IL20050211861	20051208
IL211862 A0	20110531	IL20110211862	20110322
IL211862 A1	20130627	IL20050211862	20051208
IN05165DN2007 A	20070817	IN2007DN05165	20070704
US2008047418 AA	20080228	US20050296402	20051208
US2008141852 AA	20080619	US20070979309	20071101
US2011005378 AA	20110113	US20070979310	20071101
US2011023693 AA	20110203	US20070979311	20071101
US2011290104 AA	20111201	US20070978663	20071030
US2012000352 AA	20120105	US20090385126	20090331

US2012031260 AA	20120209	US20110237691	20110920
US2012266745 AA	20121025	US20110273689	20111014
US7383761 BB	20080610	US20050296402	20051208
US7628104 BB	20091208	US20070979309	20071101
US7926406 BB	20110419	US20070979310	20071101
US7954415 BB	20110607	US20070979311	20071101
US8074553 BA	20111213	US20070978663	20071030
US8104396 BB	20120131	US20090385126	20090331
US8387512 BB	20130305	US20110237691	20110920
US8857311 BB	20141014	US20110273689	20111014
US9207046 BA	20151208	US20130753853	20130130
US9441918 BA	20160913	US20140999597	20140312
US9733049 BA	20170815	US20150752029	20150626
US9797690 BA	20171024	US20160262718	20160912
WO06083391 A2	20060810	WO2005US44482	20051208
WO06083391 A3	20070503	WO2005US44482	20051208
WO09145827 A1	20091203	WO2009US01990	20090331

Probable Assignee: ARMOR DYNAMICS INC

Assignee(s):(std)**:** ARMOR DYNAMICS INC ; ARMORDYNAMICS INC ; SCHAEFFER WAYNE ; WARREN DAVID ; WARREN DAVID H

Inventor(s):(std)**:** SCHAEFFER WAYNE ; WARREN DAVID H ; WARREN DAVID

Agent(s): BORDEN LADNER GERVAIS LLP; STERLINA TATJANA; SANFORD TCOLB AND CO; ANDREWS KURTH LLP; SEAN S; MATTHEW J; ANDREWS KURTH KENYON LLP; WOODEN SEAN S ET AL

Designated states: AE AG AL AM AO AT AU AZ BA BB BE BF BG BH BJ BR BW BY BZ CA CF CG CH CI CM CN CO CR CU CY CZ DE DK DM DO DZ EC EE EG ES FI FR GA GB GD GE GH GM GN GQ GR GT GW HN HR HU ID IE IL IN IS IT JP KE KG KM KN KP KR KZ LA LC LI LK LR LS LT LU LV LY MA MC MD ME MG MK ML MN MR MT MW MX MY MZ NA NE NG NI NL NO NZ OM PG PH PL PT RO RS RU SC SD SE SG SI SK SL SM SN ST SV SY SZ TD TG TJ TM TN TR TT TZ UA UG US UZ VC VN YU ZA ZM ZW

International class (IPC 8-9): B32B18/00 F41H5/00 F41H5/007 F41H5/013 F41H5/02 F41H5/04 F41H5/06 F41H5/24 F41H7/00 F41H7/02 F41H7/04 F42B33/00 (Advanced/Invention);
B32B18/00 F41H5/00 F41H5/007 (Core/Invention);
F41H (Subclass/Invention)

International class (IPC 1-7): F41H5/02

CPC: F41H7/044 F41H7/02 F41H5/007 F41H5/0414 F41H5/0421 F41H5/0428 F41H5/0492

European class: F41H5/007 F41H5/04C F41H5/04C2 F41H5/04C4

US class: 1/1 52/284 86/50 86/50P 89/36.01 89/36.02 89/36.020P 89/36.03 89/36.06 89/36.060S 89/36.08 89/36.17 89/36.170S 89/902 89/902S 89/903 89/903S 89/904 89/904S 89/906 89/906S 89/908 89/908S 89/909 89/910 89/910S 89/917 89/917S 89/930

Classification Explorer

Cited documents: WO12085695 A1, WO04099705 A1, US9441918 BA, US8272311 BB, US7908959 BB, US7866248 BB, US7685922 BA, US7300893 BB, US7279129 BB, US7276468 BA, US7216576 BB, US7087120 BA, US7080587 BB, US6962102 BA, US6959744 BB, US6827766 BB, US6713008 BA, US6706097 BB, US6689226 BA, US6642159 BA, US6635357 BB, US6575075 BB, US6532857 BA, US6408734 BA, US6370690 BA, US6112635 A, US6034155 A, US5967211 A, US5905225 A, US5738925 A, US5723807 A, US5531500 A, US5517894 A, US5376443 A, US5293806 A, US5266379 A, US5164536 A, US5087516 A, US4981067 A, US4953442 A, US4867077 A, US4821620 A, US4665794 A, US4425853 A, US4186648 A, US4179979 A, US4111713 A, US4111097 A, US4081581 A, US3969563 A, US3860052 A, US3750355 A, US3544417 A, US3529389 A, US3431818 A, US3427139 A, US3232017 A, US2806509 A, US2009114083 AA, US2008264243 AA, US2007221052 AA, US2007017361 AA, US2004083880 AA, US2002178900 AA, US2001031350 AA, US1463498 A, JP3010206 B2, DE2811733 C1,

Forward Citations: WO18122844, WO17068568, WO16018549, WO15170089, WO13173772, WO10053611, WO10053611, WO09131601, WO09120179, US9975645, US9944403, US9879474, US9835429, US9797690, US9738395, US9683816, US9624666, US9482491, US9417038, US9310169, US9291434, US9276305, US9249573, US9212413, US9121674, US9074850, US9052164, US9032858, US9016186, US8978536, US8881638, US8863666, US8752468, US8689671, US8464479, US8443708, US8424442, US8371636, US8251410, US8096223, US8028612, US7987762, US7963204, US7866248, US7866106, US7827897, US7712409, US7681485, US7661228, US7578103, US2016195367, US2016146578, US2016145865, US2015354926, US2015300787, US2015013922, US2014318360, US2014318359, US2014087202, US2014033908, US2013305643, US2013293429, US2013239835, US2013233163, US2013213210, US2012312150, US2012239247, US2012210860, US2012186428, US2012186426, US2012186425, US2012180631, US2012180178, US2012174757, US2012061432, US2011247481, US2011120293, US2011048219, US2011017053, US2010294123, US2010218669, US2010218357, US2010077913, US2010031810, US2009020241, US2008309123, US2008066397, US2008006146, US2007220817, US2007199278, US10161721, US10113848, US10060181, JP6086770, JP2013195058, EP3140194, EP2215423, EP2215423, EP1959073, DE102014105454, DE102014105454, DE102011121445, CN105890458, CN104266548, CN104154820, CN103109150, CN103109150,

Abstract:
Methods and apparatus for providing ballistic protection and stopping high-velocity rounds or explosives. The apparatus may include a ballistic panel for providing ballistic protection. The ballistic panel includes a core that includes a plurality of node cells, an intermediate layer that surrounds the core and fills in the node cells, and an outer coating. The ballistic panel absorbs the force of high-velocity, ballistic, low-velocity, and high foot pound pressure rounds, fragments, and impacts and is capable of completely capturing such ballistic rounds and fragments without external deflection or complete penetration through ballistic panel.

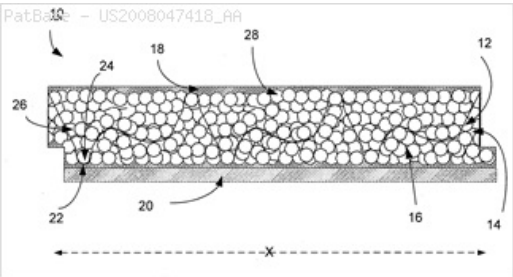

33) Family number: 46782860 (US7789982B)

Title:	FLEXIBLE DILUTE EXPLOSIVE DEVICE
Priority:	US20070701966 20070202
Family:	

Publication number	Publication date	Application number	Application date
US7789982 BA	20100907	US20070701966	20070202

Probable Assignee:	SRI INT
Assignee(s):(std)**:**	STANFORD RES INST INT
Assignee(s):	ACCURATE ENERGETIC SYSTEMS LLC ; SRI INT ; SRI INTERNATIONAL
Inventor(s):(std)**:**	BELL ROBERT J ; GEFKEN PAUL R ; GREENFIELD GARY R
Agent(s):	LUMEN PATENT FIRM
International class (IPC 8-9):	C06B25/00 C06B25/32 C06B45/00 C06B45/04 C06B45/06 D03D23/00 D03D43/00 (Advanced/Invention)
CPC:	C06B23/001 C06B25/32 C06B25/34 C06B45/02
European class:	C06B23/00B C06B25/32 C06B25/34 C06B45/02
US class:	149/109.4 149/17 149/18 149/2 149/88 149/93
Classification Explorer	
Cited documents:	US5507889 A, US5417161 A, US4722280 A,
Forward Citations:	RU2671340,

Abstract:
A flexible dilute explosive device is provided that includes an explosive material, such as pentaerythritol tetranitrate (PETN), combined with a non-reactive matrix material, such as light-weight polymer beads, and the combination is held in flexible packaging. The flexible packaging includes fabric, antistatic, evacuated and plastic housings. The flexible dilute explosive device can be applied to any contoured shape in the field. It has a total density that is typically between 5 to 10 percent greater than its explosive density and can be reliably detonated at lower explosive densities. By using different packaging methods, the flexible dilute explosive device can be made to have a fixed explosive density, or a field tailored explosive density using a variable volume housing. It can have a reduced explosive density by adding inert foam blocks to the combination, having an overall volumetric explosive density reduced to 2.5 lb/ft^3 (0.04 g/cm^3).

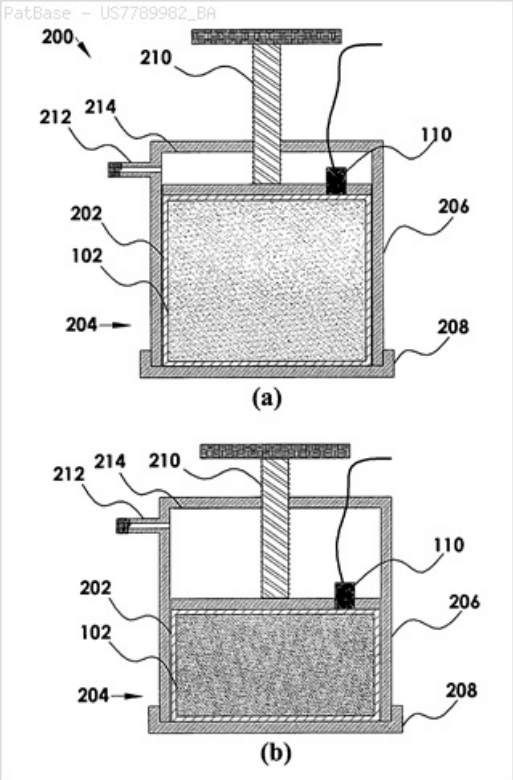

34) Family number: 15734868 (US6314887B)

Title:	Microelectromechanical systems (MEMS)-type high-capacity inertial-switching device
Priority:	US20000184137P 20000222 US20000556989 20000424 US20000560527 20000424
Family:	

Publication number	Publication date	Application number	Application date
US6314887 BA	20011113	US20000556989	20000424
US6321654 BA	20011127	US20000560527	20000424

Probable Assignee:	US ARMY
Assignee(s):(std)**:**	US ARMY
Assignee(s):	ARMY US GOV AS REPRENSENTED BY SECRETARY OF ; ARMY US GOV REPRENSENTED BY SECRETARY OF AS ; ARMY US GOV REPRENSENTED BY SECRETARY OF US ARMY T ; THE UNITED STATES OF AMERICA AS REPRESENTED BY THE ; THE UNITED STATES OF AMERICA AS REPRESENTED BY THE SECRETARY OF THE ARMY

Inventor(s):(std): ROBINSON CHARLES H

International class (IPC 8-9): F42C15/24 F42C19/06 (Advanced/Invention); H01H1/00 H01H35/14 (Advanced/Non-invention)

International class (IPC 1-7): F24C15/24 F42C15/40

CPC: F42C15/24 H01H1/0036 H01H35/14 H01H2001/0047 F42C19/06

European class: F42C15/24 F42C19/06 T01H1/00M T01H1/00M1A T01H35/14

US class: 102/251 102/262

Classification Explorer

Cited documents: US6167809 BA, US6064013 A, US5705767 A,

Forward Citations: WO10025178, WO09128979, WO06127035, WO02091464, US9911308, US9836948, US9832887, US9814838, US9805620, US9773627, US9724471, US9562825, US9555191, US9542826, US9517307, US9474869, US9422958, US9327077, US9315663, US9278182, US9278177, US9259539, US9238108, US9194682, US9146217, US9022980, US9022022, US8940210, US8939943, US8932252, US8926594, US8899987, US8887640, US8813824, US8789366, US8764286, US8714090, US8690827, US8656837, US8627816, US8598553, US8544645, US8540913, US8459184, US8448574, US8436638, US8434408, US8413509, US8361026, US8276515, US8231573, US8226610, US8206360, US8172082, US8104405, US7913623, US7893799, US7849798, US7819062, US7798064, US7785098, US7749194, US7731686, US7712419, US7701694, US7698983, US7657134, US7610783, US7605377, US7581706, US7574960, US7559238, US7552681, US7530312, US7518234, US7493858, US7412928, US7411204, US7410606, US7398734, US7383774, US7320286, US7316186, US7314382, US7266988, US7216589, US7183633, US7148436, US7142087, US7142087, US7141812, US7141812, US7116858, US7096878, US7096568, US7084762, US7069861, US7063019, US7059339, US7057245, US7055437, US7051656, US7051656, US7040234, US7038150, US7025619, US7012491, US7007606, US6964231, US6873756, US6845664, US6622629, US6598899, US6590313, US6568329, US6487864, US6472739, US6407478, US2017138714, US2016297670, US2016131552, US2015041208, US2013192038, US2012222502, US2012192747, US2012192745, US2012000388, US2011234362, US2011232562, US2011232278, US2010282106, US2010258021, US2010212528, US2010132577, US2010011548, US2009256297, US2009087135, US2008120976, US2008087841, US2007295233, US2007071575, US2006185728, US2006070547, US2006055499, US2006049826, US2005217467, US2005199822, US2005199821, US2005183609, US2005183605, US2005181636, US2005003631, US2004134281, US2004112239, US2004031266, US2003168097, US2002114143, US2002011758, US10143792, US10105489, US10099023, US10076611, US10041775, RU2642584, RU2636830, RU2481551, KR101193822, JP4652831, JP2005214619, JP2004236306, GB2410371, GB2410371, FR2962210, FR2944348, EP2559535, EP2559534, EP2559533, EP2402706, EP2239535, EP1637831, EP1584889, EP1559987, EP1559986, EP1559986, CN107153384, CN103274348, CN103274348,

Abstract:
Various ultra-miniature, monolithic inertial switching (G-switch) devices used in safety and arming (S and A) devices for projected munitions, which operate in accordance with a shuttle member (50), which effectuates current switching of around an ampere of current when subjected to a threshold inertial loading (for example, an impact or gun launch of a projection munition). The embodiments of the invention can be a passive threshold G-switch with or without switch enable and arming capability. The embodiments (100, 200) of the invention use either mechanical or electromechanical switch enable functioning and can optionally include a shuttle time-delay feature (54). Both embodiments can incorporate various designs for a switching assembly (75) such as latching single-throw switch having the configurations of either a normally-open, double pole, single-throw switch or a normally-open, single pole, single-throw switch, wherein switch closing occurs when the shuttle member (50) experiences inertial loading and penetrates the switching assembly (75).

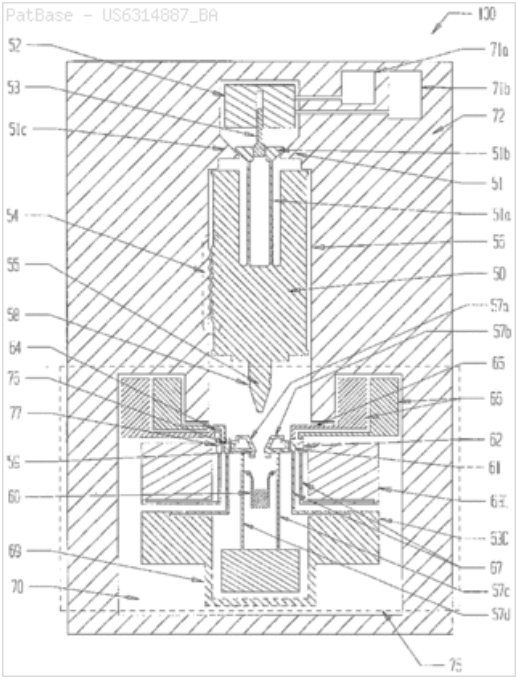

35) Family number: 51166878 (US2012135280A) © PatBase

Title: MULTI-FUNCTIONAL INSULATION MATERIALS FOR THERMAL BATTERIES

Priority: US20100955875 20101129 US20110306959 20111129 US20130011710 20130827

Family:

Publication number	Publication date	Application number	Application date
US2012135280 AA	20120531	US20100955875	20101129
US2012301754 AA	20121129	US20110306959	20111129
US2013344356 AA	20131226	US20130011710	20130827

Probable Assignee: OMNITEK PARTNERS LLC

Assignee(s):(std): OMNITEK PARTNERS LLC ; RASTEGAR JAHANGIR S ; SUBRAMANIAN SHANTHI ; VESTA SCIENCES INC

Inventor(s):(std): RASTEGAR JAHANGIR S ; SUBRAMANIAN SHANTHI

International class (IPC 8-9): H01M10/48 H01M6/36 (Advanced/Invention)

CPC: H01M6/36

European class: H01M6/36

US class: 429/112 429/112S 429/52 429/52P 429/61 429/90

Classification Explorer

Cited documents: US7560085 BB, US6475662 BA, US6198245 BA, US3575714 A, US3447970 A,

Forward Citations: US2015147601, CN106876737,

Abstract:
A thermal battery including: a casing; a thermal battery cell disposed in the casing and operatively connected to electrical connections exposed from the casing; a fuel and oxidizer mixture disposed at least partially between the casing and the battery cell; and one or more initiators for initiating one or more of the thermal battery cell and the fuel and oxidizer mixture; wherein the fuel and oxidizer mixture produces an exothermic reaction upon initiation and forms a reaction product being a thermal insulator.

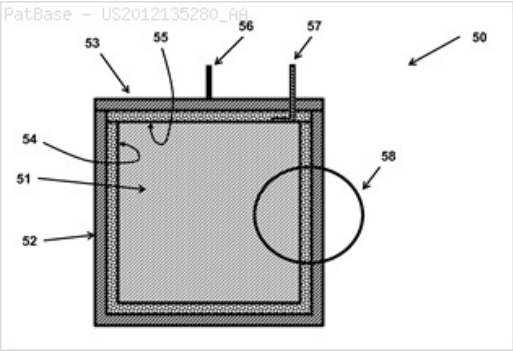

36) Family number: 30127947 (US2003171508A)

© PatBase

Title: ALPHA-OLEFINS AND OLEFIN POLYMERS AND PROCESSES THEREFOR

Priority:

US19950378044	19950124	US19950415283	19950403	US19950473590	19950607
US19950007375P	19950808	US19950002654P	19950822	US19950007375P	19951115
AU19960050208	19960124	CA19962211108	19960124	CA19962338526	19960124
CA19962338542	19960124	CA19962338542	19960124	EP19960907020	19960124
CA19962338581	19960124	JP19960523064	19960124	JP19960523064	19960124
JP19960523064T	19960124	JP19960523064T	19960124	US19960590650	19960124
WO1996US01282	19960124	US19970891405	19970710	US19970891398	19970710
US19970891224	19970710	US19970891331	19970710	US19970891403	19970710
US19970891332	19970710	US19970891472	19970710	US19970899003	19970710
US19970891442	19970710	US19970899002	19970710	US19970899022	19970710
KR19970705011	19970723	US19970899017	19970723	US19980042776	19980317
US19980120008	19980721	JP20000504179	19980723	JP20000504179T	19980723
WO1998US15197	19980723	WO1999US05836	19990317	US20000496105	20000201
US20000496114	20000201	US20000514880	20000229	US20000644167	20000823
US20000660578	20000912	US20000707297	20001106	AU20000071835	20001124
US20010887273	20010622	US20030437685	20030512	US20030689301	20031020

Family:

Publication number	Publication date	Application number	Application date
AT238360 E	20030515	AT19960907020T	19960124
AU199650208 A1	19960814	AU19960050208	19960124
AU199885087 A1	19990216	AU19980085087	19980723
AU199931890 A1	19991011	AU19990031890	19990317
AU200071835 A1	20010308	AU20000071835	20001124
AU200071835 A5	20010308	AU20000071835D	20001124
AU2003204611 AA	20030724	AU20030204611	20030610
AU2003204611 BB	20060302	AU20030204611	20030610
AU2003204611 BH	20060323	AU20030204611	20030610
AU729324 B2	20010201	AU19960050208	19960124
AU759997 B2	20030501	AU20000071835	20001124
BRPI9607485 A	19971223	BR1996PI07485	19960124
CA2211108 AA	19970722	CA19962211108	19960124
CA2211108 C	20010529	CA19962211108	19960124
CA2338526 AA	19960801	CA19962338526	19960124
CA2338526 C	20031209	CA19962338526	19960124
CA2338542 AA	19960801	CA19962338542	19960124
CA2338542 C	20040518	CA19962338542	19960124
CA2338581 AA	19960801	CA19962338581	19960124
CN100357327 C	20071226	CN19961092646	19960124
CN101182365 A	20080521	CN200710185167	19960124
CN1181089 A	19980506	CN19961092646	19960124
CZ9702351 A3	19971217	CZ19970002351	19960124
DE69627636 D1	20030528	DE19966027636	19960124
DE69627636 T2	20040226	DE19966027636T	19960124
DE69818061 D1	20031016	DE19986018061	19980723
DE69818061 D1	20031016	DE19986018061T	19980723
DE69818061 T2	20040603	DE19986018061T	19980723

EP0805826 A2	19971112	EP19960907020	19960124
EP0805826 B1	20030423	EP19960907020	19960124
EP0998504 A1	20000510	EP19980935939	19980723
EP0998504 B1	20030910	EP19980935939	19980723
EP1348723 A2	20031001	EP20030075669	19960124
EP1348723 A3	20040929	EP20030075669	19960124
FI973096 A	19970923	FI19970003096	19970723
FI973096 A0	19970723	FI19970003096	19970723
JP10513489 T2	19981222	JP19960523064T	19960124
JP2003518139 T2	20030603	JP20000504179T	19980723
JP2005307218 A2	20051104	JP20050151691	20050524
JP2009102658 A2	20090514	JP20090027901	20090209
JP3847783 B2	20061122	JP19960523064T	19960124
JP3872808 B2	20070124	JP20050151691	19960124
JP3872808 B2	20070124	JP20050151691	20050524
JP3872808 B2	20070124	JP20050151691	20050524
KR100413738 B1	20040103	KR20017000995	20010122
KR100418168 B1	20040214	KR20017000993	20010122
KR100418533 B1	20040611	KR19970705011	19960124
KR100440696 B1	20040721	KR20017000991	20010122
KR19980703597 A	19981205	KR19970705011	19960124
KR20030096432 A	20031231	KR20017000991	19960124
MX9705627 A1	19980731	MX19970005627	19960124
NO973310 A	19970923	NO19970003310	19970717
NO973310 A0	19970717	NO19970003310	19970717
NZ303800 A	20000526	NZ19960303800	19960124
PL322446 A1	19980202	PL19960322446	19960124
TR9700681 T1	19980221	TR19970000681T	19960124
US2003171508 AA	20030911	US20010887273	20010622
US2003212225 AA	20031113	US20030437685	20030512
US2004102591 AA	20040527	US20030689301	20031020
US5866663 A	19990202	US19970891332	19970710
US5880241 A	19990309	US19960590650	19960124
US5880323 A	19990309	US19970891331	19970710
US5886224 A	19990323	US19970891403	19970710
US5891963 A	19990406	US19970891442	19970710
US5916989 A	19990629	US19970891472	19970710
US6034259 A	20000307	US19970891398	19970710
US6107422 A	20000822	US19970899003	19970710
US6140439 A	20001031	US19970891405	19970710
US6218493 BA	20010417	US19970891224	19970710
US6310163 BA	20011030	US19970899002	19970710
US6482907 BA	20021119	US20000496105	20000201
US6495646 BA	20021217	US20000514880	20000229
US6573353 BA	20030603	US20000660578	20000912
US6605679 BA	20030812	US20000496114	20000201
US6670297 BA	20031230	US20000707297	20001106
US6689910 BB	20040210	US20030437685	20030512
US6894134 BB	20050517	US20010887273	20010622
US6897272 BA	20050524	US20000644167	20000823
US7271231 BB	20070918	US20030689301	20031020
WO9623010 A2	19960801	WO1996US01282	19960124
WO9623010 A3	19961205	WO1996US01282	19960124
WO9905189 A1	19990204	WO1998US15197	19980723
WO9947572 A1	19990923	WO1999US05836	19990317
WO9947572 C2	20000127	WO1999US05836	19990317

Probable Assignee: OF NORTH CAROLINA AT CHAPEL HILL UNIV

Assignee(s):(std)**:** ARTHUR SAMUEL DAVID ; BROOKHART MAURICE S III ; CHAPEL HILL ; COTTS PATRICIA METZGER ; DU PONT ; GUAN ZHIBIN ; JOHNSON LYNDA KAYE ; KILLIAN CHRISTOPHER MOORE ; E I DU PONT DE NEMOURS AND COMPANY ; E I DU PONT DE NEMOURS AND CO ; EI DU PONT DE NEMOURS AND CO ; E I DU PONT DE NEMOURS and CO ; UNIV OF NORTH CAROLINA AT CHAP ; UNIV NORTH CAROLINA ; UNIV NORTH CAROLINA CHAPEL HIL ; MCCORD ELIZABETH FORRESTER ; MCCLAIN STEPHAN JAMES ; NORTH CAROLINA AT CHAPEL HILL UNIV ; UNIVERSITY OF NORTH CAROLINA AT CHAPEL HILL THE ; UNIVERSITY OF NORTH CAROLINA AT CHAPEL HILL OFFICE ; UNIV NORTH CAROLINA AT ; THE UNIVERSITY OF NORTH CAROLINA AT CHAPEL HILL ; EIDU PONT DE NEMOURS AND CO ; UNIV NORTH CAROLINA CHAPEL HILL

Assignee(s): E ; UNIV OF NORTH CAROLINA AT CHAPEL HILL ; UNIVERSITY OF NORTH CAROLINA CHAPEL HILL ; NORTH CAROLINA UNIV OF ; WANG LIN ; MORKEN PETER ARNOLD ; WANG YUELI ; UNIVERSITY OF NORTH CAROLINA AT CHAPEL HILL CHAPEL HILL ; UNIVERSITY OF NORTH CAROLINA AT CHAPEL HILL OFFICE OF TECHNOLOGY DEPARTMENT ; OF NORTH CAROLINA AT UNIV ; UNIVERSITY OF NORTH CAROLINA AT CHAPEL HILL CHAPEL ; UNIVERSITY OF NORTH CAROLINA AT ; OF NORTH CAROLINA AT CHAPEL HILL UNIV ; OF NORTH CAROLINA UNIV ; OF NORTH CAROLINA CHAPEL HILL UNIV ; NORTH CAROLINA UNIV ; MCLAIN STEPHAN JAMES ; PARTHASARATHY ANJU ; KREUTZER KRISTINA ANN ; UNIVERSITY OF NORTH CAROLINA ; TEMPEL DANIEL JOSEPH ; E I DU PONT DE NEMOURS AND CO WILMINGTON ; DU PONT DE NEMOURS AND CO E I ; E I DU PONT DE NEMOUS AND CO ; E I DUPONT DE NEMOURS AND CO ; EI DU PONT DE NEMOURS AND CO LEGAL PATENTS 1007 MA ; ITTEL STEVEN DALE ; FELDMAN JERALD ; COUGHLIN EDWARD BRYAN ; BENNETT ALISON MARGARET ANNE ; BENNETT MARGARET ANNE ; BROOKHART MAURICE S

Inventor(s):(std)**:** ANJU PARTHASARATHY ; ARTHUR S D ; ARTHUR SAMUEL DAVID ; BENNETT ALISON MARGARET ANNE ; BENNETT MARGARET ANN ; BENNETT MARGARET ANNE ; BENNETT MARGRET ANNE ; BROOKHART III MAURICE S ; BROOKHART MAURICE C ; BROOKHART MAURICE S ; BROOKHART MAURICE S III ; C M KILLIAN ; CHRISTOPHER MOORE KILLIAN ; COTTS PATRICIA METZGER ; COUGHLIN EDWARD BRYAN ; DANIEL JOSEPH TEMPEL ; EDWARD BRYAN COUGHLIN ; ELIZABETH FORRESTER MCCORD ; ELIZABETH MCCORD ; MARGARET ANNE BENNETT ; MAURICE S BROOKHART ; MCCLAIN STEPHAN JAMES ; MCCORD ELIZABETH FORRESTER ; MCCORD ELIZADBETH FORRESTER ; MCLAIN STEPHAN JAMES ;

MCLAIN STEPHEN JAMES ; MORKEN PETER ARNOLD ; PARTHASARATHY ANJU ; PARTHASARTHY ANJU ; PATRICIA METZGER COTTS ; PETER ARNOLD MORKEN ; S D ARTHUR ; SAMUEL DAVID ARTHUR ; STEPHAN JAMES MCCLAIN ; STEPHAN JAMES MCLAIN ; FELDMAN JERALD ; GUAN ZHIBIN ; ITTEL STEVEN DALE ; JERALD FELDMAN ; JOHNSON L K ; JOHNSON LYNDA KAYE ; JOHNSON LYNDA KYE ; KILLIAN C M ; KILLIAN CHRISTOPHER MOORE ; KREUTZER KRISTINA ANN ; KRISTINA ANN KREUTZER ; L K JOHNSON ; LIN WANG ; LYNDA KAYE JOHNSON ; STEVEN DALE ITTEL ; TEMPEL DANIEL JOSEPH ; TEMPLE DANIEL JOSEPH ; WANG LIN ; WANG YUELI ; YANG ZHEN YU ; YUELI WANG ; ZHIBIN GUAN ; TEMPEL JOSEPH ; KRUETZER KRISTINA ANN ; KREUTZER ANN ; KILLIAN MOORE ; KILLAN CHRISTOPHER MOORE ; JOSEPH NIEL ; JOHNSON KAYE ; ITTEL DALE ; COUGHLIN BRYAN ; MORKEN ARNOLD ; MCLAIN JAMES ; MCCORD FORRESTER ; MCCORD ELIZABETH ; BROOKHART S ; BENNETT ANNE ; ARTHUR DAVID

Inventor(s): RAYMO ; JR RONALD R ; MACCORD ELIZABETH FORRESTER ; MACCLAIN STEPHAN JAMES ; CHRISTOPHER MOORE KILLAN ; NIEL JOSEPH ; LYNDA KYE JOHNSON ; STEPHEN JAMES MCLAIN ; ELIZADBETH FORRESTER MCCORD

Agent(s): CALLINANS; FISHER ADAMS KELLY CALLINANS; SPRUSON AND FERGUSON; DIMOCK STRATTON LLP; BENNETT JONES LLP; TANI YOSHIKAZU; ABE KAZUO

Designated states: AL AM AT AU AZ BA BB BE BF BG BJ BR BY CA CF CG CH CI CM CN CU CY CZ DE DK EE ES FI FR GA GB GD GE GH GM GN GR GW HR HU ID IE IL IN IS IT JP KE KG KP KR KZ LC LI LK LR LS LT LU LV MC MD MG MK ML MN MR MW MX NE NL NO NZ PL PT RO RU SD SE SG SI SK SL SN SZ TD TG TJ TM TR TT UA UG US UZ VN YU ZA ZW

International class (IPC 8-9): B01J31/00 B01J37/00 C07C2/00 C07C2/32 C07C249/02 C07C251/00 C07C251/08 C07C251/24 C07C309/82 C07C309/84 C07C69/52 C07F11/00 C07F15/00 C07F15/02 C07F15/04 C07F15/06 C07F19/00 C07F5/00 C07F7/00 C07F9/00 C08F10/00 C08F10/02 C08F10/06 C08F10/08 C08F110/00 C08F110/02 C08F110/06 C08F110/08 C08F110/14 C08F12/30 C08F120/22 C08F132/04 C08F20/02 C08F20/06 C08F210/00 C08F210/02 C08F210/06 C08F210/14 C08F210/16 C08F214/18 C08F216/00 C08F220/10 C08F220/14 C08F220/22 C08F228/02 C08F232/00 C08F232/04 C08F255/00 C08F26/00 C08F32/04 C08F4/02 C08F4/04 C08F4/06 C08F4/26 C08F4/42 C08F4/52 C08F4/60 C08F4/602 C08F4/622 C08F4/639 C08F4/64 C08F4/70 C08F4/80 C08G61/04 C08J5/18 C08L23/00 C08L23/02 C08L23/16 C08L33/08 C09D123/00 C09J123/00 C09J123/02 C09J133/08 C10M107/02 C10M119/00 C10M143/04 H01L29/747 H01L29/87 H04M3/18 (Advanced/Invention);
C07C2/00 C07C251/08 C07F11/00 C07F15/00 C07F5/00 C07F7/00 C07F9/00 C08F10/02 C08F10/06 C08F110/02 C08F110/14 C08F210/16 C08F232/00 C08F4/70 C08L23/00 C09J123/00 (Advanced/Non-invention);
B60Q1/26 B60R1/12 C07C249/00 C07C251/00 C07C309/00 C07F11/00 C07F15/00 C07F5/00 C07F7/00 C07F9/00 C08F10/00 C08F110/00 C08F120/00 C08F132/00 C08F20/00 C08F210/00 C08F214/00 C08F220/00 C08F232/00 C08F26/00 C08F4/00 C08G61/00 C08J5/18 C08L23/00 C08L33/00 C09D123/00 C09J123/00 C09J133/06 C10M107/00 C10M119/00 C10M143/00 (Core/Invention);
C08F110/00 (Core/Non-invention);
C08F (Subclass/Invention)

International class (IPC 1-7): B01J31/00 B01J37/00 C07C2/00 C07C2/32 C07C233/05 C07C249/02 C07C251/00 C07C251/08 C07C251/24 C07C309/82 C07C69/52 C07F11/00 C07F15/00 C07F15/02 C07F15/04 C07F15/06 C07F19/00 C07F5/00 C07F7/00 C07F9/00 C08F10/00 C08F10/02 C08F10/06 C08F10/08 C08F110/00 C08F110/02 C08F110/06 C08F110/08 C08F110/14 C08F110/62 C08F114/18 C08F12/30 C08F120/22 C08F132/04 C08F20/02 C08F20/06 C08F210/00 C08F210/02 C08F210/06 C08F210/14 C08F210/16 C08F214/18 C08F216/00 C08F216/02 C08F220/10 C08F220/14 C08F220/22 C08F228/02 C08F232/04 C08F255/00 C08F32/04 C08F4/02 C08F4/04 C08F4/06 C08F4/26 C08F4/42 C08F4/52 C08F4/60 C08F4/602 C08F4/622 C08F4/64 C08F4/70 C08F4/80 C08G61/04 C08J5/18 C08L23/02 C08L23/16 C08L33/08 C09D123/00 C09J123/00 C09J123/02 C09J133/08 C10M107/02 C10M119/00 C10M143/04

CPC: C07C309/82 C09J123/06 C09J123/20 Y10S430/165 C08F110/02 C08F10/06 C08F110/06 C08F110/14 C08F210/02 C08F210/14 C08F232/00 C08L23/02 C08F10/00 C08F20/02 C08F10/02 Y10T428/1352 Y10T428/1386 Y10T428/139 Y10T428/24942 Y10T428/2878 Y10T428/31692 Y10T428/31855 Y10T428/31895 Y10T428/31938 Y10T442/20 Y10T442/60 Y10T442/626 C08F210/16

European class: B60Q1/26J B60Q1/26J2 B60R1/12A C07C309/82 C08F10/00 C08F110/02 C08F110/06 C08F210/02 C08F210/14 C08F210/16 C08L23/02 C09J123/06 C09J123/20 H01L29/747 H01L29/87 H04M3/18 M08F10/00 M08F10/02 M08F10/06 M08F110/02 M08F110/06 M08F110/14 M08F210/16 M08F232/00

US class: 208/18 257/E29.215 257/E29.337 428/212 428/35.7 428/355.0EN 428/355EN 428/36.8 428/36.9 428/368 428/461 428/500 428/511 428/523 430/199 430/252 430/964 442/327 442/351 442/59 502/103 502/11 502/117 502/154 502/155 502/162 502/167 508/591 521/142 521/143 521/144 521/149 521/38 523/168 524/80 525/240 525/268 525/269 525/270 525/285 525/297 525/301 525/308 525/319 525/322 525/324 525/326.1 525/329.7 525/330.3 525/333.7 525/333.9 525/334.1 525/539 525/55 526/120 526/122 526/131 526/134 526/145 526/160 526/161 526/169.1 526/170 526/171 526/172 526/172P 526/239 526/242 526/242P 526/243 526/245 526/247 526/248 526/273 526/274 526/274S 526/277 526/279 526/279S 526/281 526/282 526/282S 526/286 526/286S 526/288 526/293 526/307.8 526/308 526/308S 526/310 526/312 526/316 526/317.1 526/318.6 526/319 526/319S 526/328 526/329 526/331 526/332 526/335 526/339 526/348 526/348.1 526/348.2 526/348.3 526/348.5 526/348.6 526/348S 526/351 526/351S 526/352 526/352.2 526/352S 526/90 526/90P 526/93 526/94 528/392 534/15 556/1 556/13 556/137 556/140 556/155 556/167 556/30 556/32 556/32S 556/34 556/35 556/43 556/51 556/52 556/57 556/58 556/7 560/205 560/205S 564/201 564/209 564/270 564/271 564/272 564/277 585/17 585/18 585/511 585/512 585/513 585/527

Classification Explorer

Cited documents: WO9717380 A2, WO9702298 A1, WO9623010 A2, WO9412699 A1, WO9313140 A1, WO9212162 A1, US6772254 BB, US6437011 BB, US6256693 BA, US6140439 A, US6107422 A, US6090900 A, US6081860 A, US6034259 A, US6025092 A, US5942461 A, US5916989 A, US5891963 A, US5886224 A, US5880323 A, US5880241 A, US5866663 A, US5763080 A, US5729703 A, US5714556 A, US5714554 A, US5635573 A, US5627292 A, US5565521 A, US5556920 A, US5555425 A, US5529821 A, US5475075 A, US5469544 A, US5425865 A, US5346924 A, US5327121 A, US5318849 A, US5302675 A, US5272236 A, US5237322 A, US5218071 A, US5208309 A, US5204429 A, US5198511 A, US5180788 A, US5134209 A, US4942519 A, US4857611 A, US4820785 A, US4761328 A, US4698403 A, US4617363 A, US4506061 A, US4424330 A, US4359561 A, US4329434 A, US4275226 A, US4259470 A, US4150208 A, US4123602 A, US4096093 A, US4001195 A, US3954697 A, US3927137 A, US3723270 A, US3668146 A, US3505301 A, US3503945 A, US3481904 A, US3265672 A, US3265622 A, US2001008925 AA, JPS63228804, JPS6067519, JP63228804 A2, JP6168625 A2, JP6168625, JP6016862 A2, JP60067519 A2, JP4318082, JP3847783 B2, JP3131611 A2, JP2270842 A2, JP2001524134 T2, IT630410 A, GB2058094 A1, GB1309565 A, GB1306788 A, GB1034197 A, FR2355854 A1, EP0504418 A1, EP0475307 A1, EP0454231 A2, EP0446013 A2, EP0381495 A2, EP0378248 A2, EP0361363 A2, EP0356692 A2, EP0304671 A1, EP0193202 A2, DE3906434 A1, DE113763 A, DE113763, DE113763, DD113763 Z, DD113763,

Forward Citations: WO9961492, WO9961492, WO9961486, WO9954364, WO9951550, WO9950318, WO9950273, WO9947628, WO9947572, WO9947569, WO9932226, WO9915569, WO9909078, WO9905189, WO9902472, WO9856832, WO9847934, WO9837110, WO9830609, WO9803559, WO9748741, WO9748740, WO9727238, WO18164798, WO18022263, WO16201222, WO16176135, WO16145179, WO16060218, WO15153082, WO15042569, WO15042565, WO15042563, WO15042562, WO15042561, WO14105614, WO14060231, WO13162745, WO13113797, WO13056979, WO13035672, WO13025351, WO12149639, WO12099682, WO12096713, WO12072417, WO12071205, WO11134798, WO11134797, WO11126788, WO11126787, WO11126784, WO11085937, WO11072851, WO11051371, WO11050042, WO11047108, WO11022373, WO10084054, WO10084047, WO10071798, WO09151825, WO09151825,

WO09096921, WO09049829, WO08135254, WO08135254, WO07070041, WO07013931, WO07013931,
WO05118605, WO04099268, WO04094487, WO04046214, WO03044067, WO03044066, WO03044066,
WO03039866, WO03028145, WO03028145, WO03000740, WO0248437, WO0240550, WO0240550,
WO0234701, WO02102859, WO02102859, WO02064638, WO02064638, WO02060957, WO0183571,
WO0183571, WO0174743, WO0144325, WO0142320, WO0136503, WO0132722, WO0123166,
WO0121670, WO0121586, WO0118097, WO0112689, WO0102635, WO0073359, WO0053643,
WO0050474, WO0050470, WO0050470, WO0043123, WO0035974, WO0022007, WO0018808,
WO0010945, WO0010945, US9997279, US9944661, US9938365, US9890182, US9815258, US9797087,
US9782763, US9759830, US9688459, US9586872, US9550841, US9498932, US9447125, US9440999,
US9416201, US9387468, US9381506, US9381505, US9371452, US9371400, US9371340, US9371339,
US9365664, US9352537, US9327867, US9315755, US9234059, US9181366, US9180651, US9175104,
US9169343, US9168720, US9168718, US8993822, US8957159, US8932706, US8920263, US8895465,
US8865840, US8859451, US8850784, US8846991, US8796403, US8779045, US8748693, US8742035,
US8729201, US8697821, US8697807, US8673806, US8668975, US8664129, US8609574, US8541519,
US8536286, US8506657, US8501892, US8415441, US8399589, US8372927, US8357759, US8338557,
US8329608, US8318875, US8309749, US8263712, US8247510, US8242297, US8242237, US8236915,
US8202954, US8198384, US8198373, US8188202, US8148472, US8143352, US8138269, US8117815,
US8093341, US8088867, US8080610, US8071687, US8058371, US8044159, US8039562, US8029878,
US8026323, US8022152, US8015725, US8008412, US7998895, US7994376, US7994237, US7985811,
US7977436, US7977269, US7977268, US7964691, US7956145, US7943715, US7943701, US7943700,
US7937924, US7928162, US7910679, US7910670, US7910637, US7906451, US7902415, US7868108,
US7855258, US7820582, US7820581, US7799886, US7795365, US7781510, US7776446, US7776428,
US7754837, US7728161, US7728160, US7727926, US7723541, US7718139, US7700707, US7683149,
US7641964, US7635739, US7625987, US7612135, US7612134, US7589223, US7579407, US7550528,
US7541402, US7524910, US7482418, US7479531, US7473746, US7459521, US7459510, US7459500,
US7456314, US7452946, US7442819, US7439314, US7439312, US7438650, US7429548, US7423091,
US7417006, US7410620, US7399874, US7361101, US7354979, US7351465, US7348388, US7344775,
US7335696, US7319125, US7314903, US7312267, US7304110, US7300903, US7294681, US7291758,
US7291575, US7285609, US7279536, US7271231, US7271121, US7268096, US7259222, US7259216,
US7253133, US7250471, US7247796, US7235604, US7232871, US7223822, US7220801, US7214755,
US7205371, US7202305, US7201935, US7199255, US7199203, US7199192, US7175543, US7166674,
US7161018, US7160834, US7157522, US7156755, US7153916, US7135528, US7129305, US7129305,
US7129304, US7129292, US7129197, US7129197, US7122603, US7109269, US7105609, US7094848,
US7094723, US7094501, US7087691, US7084223, US7084218, US7067603, US7067450, US7060768,
US7056996, US7056993, US7056992, US7056982, US7053164, US7049378, US7049372, US7041765,
US7041764, US7041758, US7041750, US7037990, US7022786, US7022785, US7019081, US7005488,
US7005400, US7001863, US6992160, US6992159, US6992158, US6992153, US6984722, US6982310,
US6982307, US6969748, US6962890, US6946568, US6946535, US6946532, US6946420, US6943226,
US6943224, US6936563, US6933400, US6933359, US6927313, US6927261, US6927258, US6927184,
US6919413, US6919407, US6919292, US6916760, US6914105, US6905999, US6903169, US6900278,
US6900277, US6897275, US6897272, US6878786, US6875718, US6867260, US6864205, US6861385,
US6858688, US6858275, US6855780, US6855771, US6852843, US6852659, US6846771, US6844446,
US6844404, US6844402, US6841676, US6841501, US6838411, US6831187, US6828454, US6825356,
US6822062, US6822057, US6821921, US6821920, US6812306, US6812305, US6812184, US6809209,
US6806332, US6803433, US6787499, US6780949, US6774191, US6770771, US6770723, US6770127,
US6765075, US6761965, US6756195, US6750307, US6747106, US6743932, US6737483, US6737130,
US6734131, US6733851, US6720397, US6720186, US6710007, US6706891, US6703458, US6696532,
US6693154, US6689928, US6689910, US6689848, US6686306, US6682797, US6680124, US6677441,
US6673892, US6670433, US6670298, US6670297, US6663809, US6660809, US6660677, US6656869,
US6656867, US6653138, US6642432, US6627723, US6627712, US6620897, US6620896, US6620895,
US6620760, US6613915, US6610627, US6608224, US6605679, US6605677, US6599997, US6593440,
US6593437, US6593266, US6586550, US6586358, US6583235, US6579823, US6576779, US6576725,
US6573353, US6573345, US6562973, US6562922, US6562751, US6559326, US6559091, US6559090,
US6555633, US6548724, US6545108, US6545107, US6544919, US6541585, US6538115, US6538085,
US6531424, US6528588, US6521727, US6521724, US6518384, US6511936, US6508984, US6506859,
US6506704, US6501000, US6500909, US6500556, US6495646, US6495485, US6492473, US6492293,
US6492291, US6489497, US6489480, US6489416, US6482907, US6479601, US6479425, US6479422,
US6476245, US6476164, US6476130, US6475946, US6468948, US6458979, US6451728, US6440745,
US6436864, US6433237, US6432862, US6423848, US6423758, US6422953, US6419881, US6417305,
US6417303, US6417301, US6417299, US6414099, US6413172, US6410664, US6410660, US6407299,
US6407026, US6403773, US6403738, US6399732, US6399724, US6399535, US6395668, US6388030,
US6380327, US6372869, US6372682, US6368708, US6365690, US6365539, US6355746, US6355735,
US6350837, US6348550, US6342574, US6331594, US6325730, US6320005, US6320004, US6315684,
US6313331, US6313236, US6310167, US6310163, US6310153, US6309997, US6306986, US6303724,
US6303720, US6303717, US6303710, US6303692, US6300440, US6297338, US6294495, US6291608,
US6291591, US6291387, US6288189, US6288183, US6288181, US6284702, US6281305, US6281303,
US6277779, US6268430, US6265507, US6265506, US6262134, US6258908, US6255248, US6255245,
US6252015, US6248540, US6245871, US6242503, US6242377, US6232259, US6232257, US6221928,
US6214761, US6211313, US6200925, US6197910, US6197888, US6197715, US6197714, US6194341,
US6187879, US6184171, US6180788, US6174976, US6174975, US6169153, US6169152, US6162884,
US6160063, US6150462, US6150295, US6143857, US6136748, US6136743, US6127497, US6127301,
US6117959, US6117956, US6114483, US6111041, US6111027, US6103946, US6103920, US6103658,
US6103657, US6100324, US6096676, US6090900, US6063881, US6060569, US6060568, US6040419,
US6037297, US6030917, US6002034, US5942461, US5932670, US5929181, US5912202, US5892101,
US5852145, US5811379, US5700748, US2017210830, US2016300641, US2015115953, US2015034662,
US2014323675, US2014141228, US2014045614, US2012309915, US2012204940, US2011130528,
US2011123775, US2011105664, US2011104488, US2011086970, US2011081529, US2011009573,
US2010324237, US2010311920, US2010311849, US2010266824, US2010266818, US2010222761,
US2010222577, US2010222531, US2010190935, US2010129924, US2010124864, US2010113718,
US2010081352, US2010029469, US2009299020, US2009270247, US2009227748, US2009214837,
US2009198025, US2009163678, US2009163643, US2009163642, US2009156768, US2009143550,
US2009118426, US2009076216, US2009076214, US2009069475, US2009062475, US2009053529,
US2009018279, US2009011258, US2008287621, US2008234443, US2008188635, US2008182940,
US2008161612, US2008153997, US2008153996, US2008113175, US2008090974, US2008075901,
US2008063845, US2008047160, US2008044606, US2008029210, US2008021178, US2008004459,
US2008004441, US2007293640, US2007263062, US2007249793, US2007213491, US2007202311,
US2007191607, US2007190335, US2007173607, US2007148455, US2007112150, US2007093623,
US2007049714, US2007049712, US2007049696, US2007027334, US2007021608, US2007010690,
US2006293474, US2006275610, US2006199727, US2006196108, US2006194892, US2006189733,
US2006175605, US2006126750, US2006122788, US2006105858, US2006094842, US2006036049,
US2006009597, US2005215735, US2005192415, US2005187362, US2005186373, US2005153084,
US2005148742, US2005148737, US2005143537, US2005137290, US2005119451, US2005119374,
US2005107559, US2005090630, US2005090381, US2005054856, US2005043496, US2005020789,
US2004267050, US2004266964, US2004220359, US2004220336, US2004220320, US2004210014,
US2004186010, US2004171481, US2004158012, US2004138395, US2004132936, US2004132935,
US2004132610, US2004127658, US2004127654, US2004127649, US2004122191, US2004102591,
US2004087724, US2004077809, US2004063885, US2004059074, US2004054054, US2004044150,
US2004043894, US2004039238, US2004032041, US2004029720, US2004029719, US2004019162,
US2004013896, US2003228978, US2003224929, US2003203807, US2003195110, US2003191018,
US2003181317, US2003176606, US2003166454, US2003158033, US2003130452, US2003100441,

US2003093668, US2003072690, US2003055184, US2003054952, US2002137862, US2001051248, US10161063, US10132082, US10065394, US10005261, US10003053, RU2475491, KR101224240, KR100675240, JP6308547, JP5122820, JP5122820, JP4319346, JP4010073, JP3872808, JP2016196465, JP2015155387, JP2014534952, JP2014528940, JP2013216270, JP2011522071, JP2011514928, JP2011012382, JP2011012169, JP2009506072, JP2007511644, JP2007063469, JP2006035718, JP2005307218, JP2004515663, JP2003527475, JP2003515620, JP2003508612, JP2003504523, JP2002543210, JP2001515107, JP2000026437, FR2812645, EP3372311, EP3309182, EP3208285, EP3208265, EP3049469, EP3049468, EP2891511, EP2754638, EP2711356, EP2681352, EP2493938, EP2383301, EP2383298, EP2377843, EP2371803, EP2368896, EP2357035, EP2316864, EP2308815, EP2308815, EP2305721, EP2247376, EP2214820, EP2172490, EP2070953, EP2050769, EP2050755, EP2025403, EP1964884, EP1919850, EP1918312, EP1918311, EP1905807, EP1820810, EP1806368, EP1803747, EP1749842, EP1730203, EP1724379, EP1699834, EP1668089, EP1664132, EP1626999, EP1626976, EP1622947, EP1620472, EP1620447, EP1603929, EP1578808, EP1577314, EP1554343, EP1539775, EP1518868, EP1471079, EP1463766, EP1448623, EP1379562, EP1373404, EP1368388, EP1355961, EP1349881, EP1328494, EP1299470, EP1282652, EP1265933, EP1263811, EP1250362, EP1229020, EP1229020, EP1179565, EP1160261, EP1080097, EP1068245, EP1056539, EP1056539, EP1003794, EP0998504, EP0994831, EP0990664, EP0988327, EP0986586, EP0985687, EP0985685, EP0942010, EP0906348, EP0906344, EP0884331, EP0884331, EP0856546, DE19930213, DE112006001733, DE102007049031, DE102007022052, CN107118298, CN107075005, CN106832124, CN106565881, CN106543029, CN106543029, CN106478854, CN106243254, CN105936659, CN105936659, CN104936793, CN104829643, CN104829643, CN104804030, CN104804030, CN104788489, CN104788489, CN104250270, CN104231140, CN104059173, CN104031191, CN104010997, CN103962096, CN103962096, CN103360517, CN103360517, CN103237845, CN103237845, CN103146494, CN102924533, CN102336846, CN102093426, CN102093425, CN101970514, AU777107, AU758417, AU751931, AU734651, AT500470,

Abstract:
Disclosed herein are processes for polymerizing ethylene, acyclic olefins, and/or selected cyclic olefins, and optionally selected olefinic esters or carboxylic acids, and other monomers. The polymerizations are catalyzed by selected transition metal compounds, and sometimes other co-catalysts. Since some of the polymerizations exhibit some characteristics of living polymerizations, block copolymers can be readily made. Many of the polymers produced are often novel, particularly in regard to their microstructure, which gives some of them unusual properties. Numerous novel catalysts are disclosed, as well as some novel processes for making them. The polymers made are useful as elastomers, molding resins, in adhesives, etc. Also described herein is the synthesis of linear alpha-olefins by the oligomerization of ethylene using as a catalyst system a combination a nickel compound having a selected alpha-diimine ligand and a selected Lewis or Bronsted acid, or by contacting selected alpha-diimine nickel complexes with ethylene.

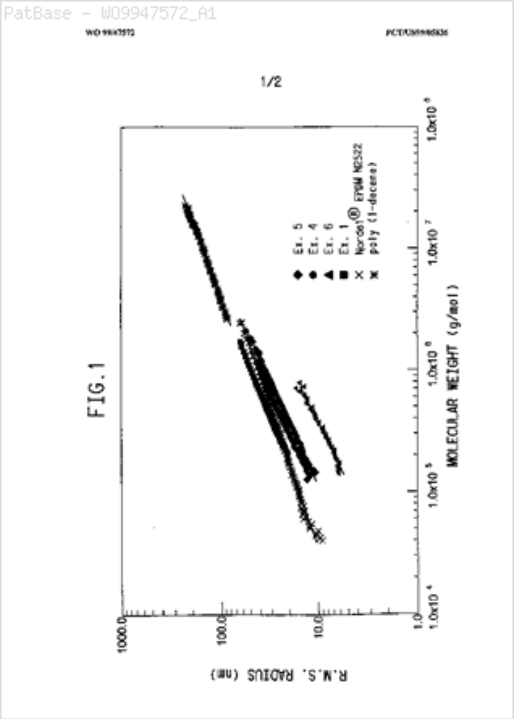

37) Family number: 64829971 (WO18047160A1) © PatBase

Title:	EXPLOSIVE SYSTEM
Priority:	IL20160247736 20160908

Family:

Publication number	Publication date	Application number	Application date
IL247736 A0	20170131	IL20160247736	20160908
WO18047160 A1	20180315	WO2017IL50968	20170830

Probable Assignee:	RAFAEL ADVANCED DEFENSE SYSTEMS LTD
Assignee(s):(std)**:**	RAFAEL ADVANCED DEFENSE SYSTEMS LTD ; SHLOMO MANDELBAUM
Inventor(s):(std)**:**	MANDELBAUM SHLOMO ; SHLOMO MANDELBAUM
Agent(s):	FRIEDMAN MARK
Designated states:	AE AG AL AM AO AT AU AZ BA BB BE BF BG BH BJ BN BR BW BY BZ CA CF CG CH CI CL CM CN CO CR CU CY CZ DE DJ DK DM DO DZ EC EE EG ES FI FR GA GB GD GE GH GM GN GQ GR GT GW HN HR HU ID IE IL IN IR IS IT JO JP KE KG KH KM KN KP KR KW KZ LA LC LK LR LS LT LU LV LY MA MC MD ME MG MK ML MN MR MT MW MX MY MZ NA NE NG NI NL NO NZ OM PA PE PG PH PL PT QA RO RS RU RW SA SC SD SE SG SI SK SL SM SN ST SV SY SZ TD TG TH TJ TM TN TR TT TZ UA UG US UZ VC VN ZA ZM ZW
International class (IPC 8-9):	A01B F42B12/02 F42B12/20 (Advanced/Invention); A01B (Subclass/Invention)
CPC:	F42B12/207 F42B12/208

Classification Explorer

Cited documents: WO03040645 A1, US8661982 BB, US8256350 BB, US2016097620 AA, EP1269104 A1,
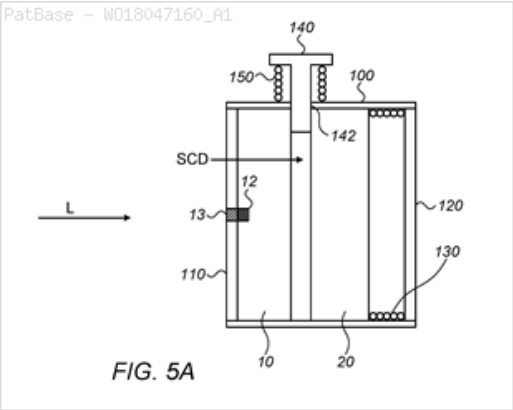
Abstract:
An explosive system and corresponding method employ a number of explosive portions, each of sub-critical dimensions so that initiation of the portion would result in incomplete detonation. A selectively-deployable spacer arrangement or deployment mechanism is deployed between a storage state in which gaps or misalignments are maintained between the explosive portions so that the explosive system remains undetonatable, and a detonable state in which the portions are brought together sufficiently to function as a combined explosive charge having effective dimensions larger than critical dimensions, rendering the explosive system detonatable.