PatBase - Search results 21 January 2019
Search query (4): [SP]: 1. a concrete mix comprising sand, fine aggregates, binder, fibers, and various admixtures, having a consistency from s2 to sf3, a compressive strength in the range of 30-60 mpa and a ductility represented by the following values: 30fc60 mpa3ffl8 mpa3 2.5fr38 mpawherein the concrete mix contains at least 390 kg of binder, the concrete mix comprises a paste volume of 300-600 liters, the concrete mix contains at least two systems of fibers a and b, the fibers system a consists of metallic fibers with a dosage of 25-100 kg/m3 with respect to the concrete mix and mechanical resistance of at least 1100 mpa, the fibers system b have a dosage of 0.2 percent -0-9 percent by m3 of the concrete mix, the concrete mix contains a general admixture system that is composed of at least 2 sub-admixture systems i and ii, wherein the first admixture system i comprises at least 2 polycarboxylic acid co-polymers (pce), a strong water reducer pce and a workability retention pce, wherein the second admixture system ii is a stabilizer obtained from a compound selected from the group consisting of modified cellulose, carboxymethyl cellulose, hydroxyethyl cellulose, hydroxypropyl methyl cellulose, natural starch, modified starch, branched modified starch, naturals gums, xanthan gum, fine silica, colloidal silica, silica fume and any combination thereof. 2. concrete mix according to claim 1, further comprising coarse aggregates. 3. concrete mix according to claim 1, wherein the dosing of the admixture system i is of 0.5-5 percent weight percent with respect to the binder content and the dosing of the admixture system ii is of 0.1-2 percent weight percent with respect to the binder. 4. concrete mix according to claim 1, wherein the dosing of the admixture system i is of 0.1-1 percent weight percent with respect to the binder content and the dosing of the admixture system ii is of 0.1-0.5 percent weight percent with respect to the binder. 5. concrete mix according to claim 1, wherein the concrete mix comprises an admixture system iii, wherein the third admixture system iii is obtained from a compound selected from the group consisting of cellulose microfibers, synthetic waxes, natural waxes, superabsorbing polymers, starch crosslinked polymers, acrylate crosslinked polymers, hexylene glycol (2-methyl-2,4-pentanediol) and any combination thereof and the dosage of the admixture system iii is of 0.3-6 weight percent with respect to the binder. 6. concrete mix according to claim 1, wherein fibers system c, comprising synthetic fibers, is added to the concrete mix. 7. concrete mix according to claim 6, wherein the dosage of fibers system c is of 0.02 percent to 2 percent volume with respect to the concrete. 8. concrete mix according to claim 2, wherein a part of the sand or the fine aggregates or the coarse aggregates are substituted by lightweight aggregates selected from the group consisting of expanded glass, expanded clay, pumice and expanded shale. 9. concrete mix according to claim 8, wherein the substitution rate for all aggregates (sand or/and fine or/and coarse aggregates) is at least 30 percent in volume.
Results: 8

1) Family number: 49717006 (CN102206068A) © PatBase

Title: SHOCK-RESISTANCE CARBON FIBER ASSORTED FIBER CONCRETE

Priority: CN201110095799 20110415

Family:

Publication number	Publication date	Application number	Application date
CN102206068 A	20111005	CN201110095799	20110415

Probable Assignee: UNIV SHANGHAI JIAOTONG

Assignee(s):(std)**:** SHANGHAI JIAO TONG UNIV ; UNIV SHANGHAI JIAOTONG

Assignee(s): SHANGHAI JIAOTONG UNIV ; SHANGHAI JIAOTONG UNIVERSITY

Inventor(s):(std)**:** XIANDONG WANG ; ZHEN HUANG ; FAN LENG ; CHANG ZHANG ; BINCHAO FENG

Inventor(s): ZHANG CHANG ; WANG XIANDONG ; LENG FAN ; HUANG ZHEN ; FENG BINCHAO

International class (IPC 8-9): C04B16/06 C04B28/04 (Advanced/Invention)

CPC: C04B28/02

Classification Explorer

Cited documents: CN101786816 A,

Forward Citations: WO16198608, WO16198603, WO16198108, CN106278015, CN106278012, CN106082844, CN105481323, CN103601439, CN103011722, CN102557554,

Abstract:
The invention relates to shock-resistance carbon fiber assorted fiber concrete in the technical field of building engineering. The concrete comprises the following components in percentage by volume: 98.6 percent -99.5 percent of concrete, 0.3-1.0 percent of wire type steel fiber, 0.1-0.3 percent of carbon fiber and 0.1 percent of polypropylene fiber. The concrete in the invention has the advantages that not only can the toughness, tensile strength and rupture strength be enhanced, but also the shock resistance, fireproofing and antiknock properties and the like can be obviously improved.

2) Family number: 53301108 (CN102976697B) © PatBase

Title: HIGH-DUCTILITY LOW-SHRINKAGE ANTI-CRACKING CONCRETE FOR BRIDGE DECK PAVEMENT AND PREPARATION METHOD THEREOF

Priority: CN201210566338 20121224

Family:

Publication number	Publication date	Application number	Application date
CN102976697 A	20130320	CN201210566338	20121224
CN102976697 B	20140702	CN201210566338	20121224

Probable Assignee: UNIV WUHAN TECH

Assignee(s):(std)**:** UNIV WUHAN TECH ; WUHAN UNIV OF TECHNOLOGY

Inventor(s):(std)**:** DING QINGJUN ; FAN BIKUN ; HU SHUGUANG ; HUANG SHAOLONG ; HUANG XIULIN ; KONG DEDONG ; LIANG JIAN ; MOU TINGMIN ; SHEN FAN ; WANG FAZHOU ; YANG KUN

International class (IPC 8-9): C04B16/06 C04B24/38 C04B24/40 C04B28/04 (Advanced/Invention)

Classification Explorer

Cited documents: CN102786272 A, CN102505624 A,

Forward Citations: WO16198608, WO16198603, WO16198108, CN106396555, CN106082799, CN104973837, CN103626438, CN103626438, CN103193425, CN103193425, CN103145389,

Abstract:
The invention belongs to the field of concrete structural materials, and discloses a preparation method for high-ductility low-shrinkage anti-cracking concrete for bridge deck pavement. The high-ductility low-shrinkage anti-cracking concrete for bridge deck pavement is characterized by comprising the following components in proportion: 135-155 kg/m<3> of water, a cementing material, 600-800 kg/m<3> of fine aggregate, 950-1150 kg/m<3> of coarse aggregate, 2.0-3.0 kg/m<3> of shrinkage-reducing ductility-increasing component,10-20 kg/m<3> of internal curing agent, 3.0-5.0 kg/m<3> of water reducing agent and hybrid fiber, wherein the cementing material comprises 320-380 kg/m<3> of cement and 20-40 kg/m<3> of coal ash in proportion; and

the hybrid fiber comprises 0.8-1.0 kg/m<3> of organic polymer fiber and 40-50 kg/m<3> of steel fiber in proportion. According to the concrete and the preparation method for the concrete disclosed by the invention, reinforcement meshes on the bridge deck pavement layer can be cancelled.

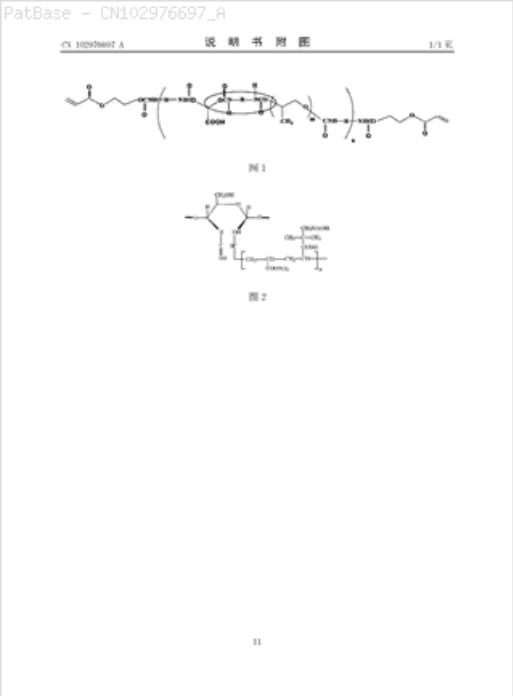

3) Family number: 48843128 (US2012021206A)

© PatBase

Title: COMPOSITE CONCRETE FOR FLOOR SLABS AND RAFTS

Priority: LV20090000186 20091026 EP20100774014 20101020 JP20120536724 20101020 WO2010LV00014 20101020 JP20120536724T 20101020 JP20140244879 20141203

Family:

Publication number	Publication date	Application number	Application date
AU2010313886 AA	20110505	AU20100313886	20101020
AU2010313886 BB	20130502	AU20100313886	20101020
CA2780090 AA	20110505	CA20102780090	20101020
CA2780090 C	20141223	CA20102780090	20101020
CN102666427 A	20120912	CN201080058318	20101020
CN102666427 B	20150415	CN201080058318	20101020
DE602010017553 D1	20140828	DE201060017553T	20101020
DK2493834 T3	20140929	DK20100774014T	20101020
EA020904 B1	20150227	EA20120000567	20101020
EA201200567 A1	20130329	EA20120000567	20101020
EP2493834 A2	20120905	EP20100774014	20101020
EP2493834 B1	20140716	EP20100774014	20101020
ES2499691 T3	20140929	ES20100774014T	20101020
HR20140848 T1	20141024	HR20140000848	20140908
IL215001 A0	20111201	IL20100215001	20101020
IL215001 A1	20151231	IL20100215001	20101020
IN06962DN2011 A	20130920	IN2011DN06962	20110912
IN290551 B	20171215	IN2011DN06962	20110912
JP2013508261 T2	20130307	JP20120536724T	20101020
JP2015110514 A2	20150618	JP20140244879	20141203
KR101368556 B1	20140227	KR20127013447	20101020
KR20120074320 A	20120705	KR20127013447	20101020
LV14122 A	20100320	LV20090000186	20091026
LV14122 B	20100420	LV20090000186	20091026
PT2493834 T	20141006	PT20100774014T	20101020
RS53525 B	20150227	RS20140000471	20101020
RS53525 B1	20150227	RS20140000471	20101020
SI2493834 T1	20141231	SI20100030719T	20101020
UA101923 C2	20130513	UA20120006349	20101020
US2012021206 AA	20120126	US20100262108	20101020
US9284225 BB	20160315	US20100262108	20101020
WO11053103 A2	20110505	WO2010LV00014	20101020
WO11053103 A3	20110623	WO2010LV00014	20101020
ZA201203212 A	20121227	ZA20120003212	20120504

Probable Assignee: PRIMEKSS NORTH AMERICA LLC

Assignee(s):(std)**:** OSLEJS JANIS ; PRIMETEH AS ; PRIMETEH A ; PRIMEKSS RABINE NORTH AMERICA LLC ; JANIS OSLEJS ; KRAVALIS KASPARS ; PRIMETEH A C ; PRIMETEH SIA

Assignee(s): O LEJS J NIS ; PRIMETEH A SSMERLA IELA 3LV-1006RIGALV ; PRIMEKSS GROUP SIA ; PRIMEKSS NORTH AMERICA LLC ; PRIMETEH A S

Inventor(s):(std)**:** OSLEJS JANIS ; KRAVALIS KASPARS ; JANIS OSLEJS ; KASPARS KRAVALIS

Inventor(s):	O LEJS J NIS ; KRAVALIS KASPARSLV ; OSLEJS JANISLV
Agent(s):	ADAMS PLUCK; CAMERON IP; FORTUNA JEVGENIJS; URIZAR JOSE ANTONIO; EITAN MEHULAL AND SADOT; KITANO TAKESHI; MATSUTOYA YUKO; OHNO SEIJI; TANAKA REIKO; MORITA KOJI; OSHA LIANG LLP
Designated states:	AE AG AL AM AO AT AU AZ BA BB BE BF BG BH BJ BR BW BY BZ CA CF CG CH CI CL CM CN CO CR CU CY CZ DE DK DM DO DZ EC EE EG ES FI FR GA GB GD GE GH GM GN GQ GR GT GW HN HR HU ID IE IL IN IS IT JP KE KG KM KN KP KR KZ LA LC LI LK LR LS LT LU LV LY MA MC MD ME MG MK ML MN MR MT MW MX MY MZ NA NE NG NI NL NO NZ OM PE PG PH PL PT RO RS RU SC SD SE SG SI SK SL SM SN ST SV SY SZ TD TG TH TJ TM TN TR TT TZ UA UG US UZ VC VN ZA ZM ZW
International class (IPC 8-9):	B32B5/16 C04B C04B103/30 C04B103/56 C04B11/34 C04B111/34 C04B111/60 C04B14/00 C04B14/36 C04B14/38 C04B14/48 C04B16/00 C04B16/06 C04B22/00 C04B22/06 C04B22/14 C04B24/00 C04B24/02 C04B24/18 C04B24/22 C04B24/26 C04B24/30 C04B28/00 C04B28/02 C04B28/04 C04B28/12 E04B5/32 E04C5/07 E04F15/12 (Advanced/Invention); C04B103/30 C04B103/56 C04B111/34 C04B111/60 (Advanced/Non-invention); C04B28/00 (Core/Invention); C04B (Subclass/Invention)
International class (IPC 1-7):	E04F15/12
CPC:	C04B2103/30 C04B22/008 C04B14/06 C04B14/48 C04B20/008 C04B24/02 C04B24/22 C04B2103/0088 C04B22/064 C04B24/2647 C04B7/32 C04B28/02 C04B2103/58 C04B2111/34 C04B2111/60 C04B28/04
European class:	C04B22/00L C04B28/02 C04B28/04 M04B103/30 M04B103/58 M04B111/34 M04B111/60
US class:	1/1 106/638 106/638S 106/644 106/644S 106/792 106/792S 106/802 106/802S 428/323 428/323P

Classification Explorer

Cited documents:	WO0218291 A1, US5114487 A, US4640648 A, US2009305019 AA, KR100755423 B1, KR100755423, JP60042260 A2, JP5070205 A2, JP2001248290 A2, JP2001181004 A2, JP11130508 A2, FR2684397 A1, EP1903014 A1, EP0737787 A1, EP0350365 A1, EP0137024 B1, EP0137024 A1, CN1453237 A, CN101560082 A, CN101172824 A, BE905741 A,
Forward Citations:	WO17025771, WO16198608, WO16198603, WO16198108, WO16189373, WO16185264, WO13037792, US2012261861, JP2015100938, ITMI20111642, ITAN20130227,

Abstract:
The invention is in the field of construction and can be used for constructing industrial floors and foundation slabs. The offered composite concrete mixture, comprising cement, sand-stone mixture, water, plasticizer, nano-size pozzolans, shrinkage reducing additive, and steel and/or synthetic fibers, allows the construction of thin, completely jointless without limitation of area, large composite concrete slabs, with no observable shrinkage cracks or curling.

4) Family number: 44920389 (KR100940550B)

© PatBase

Title:	REINFORCING CONCRETE STRUCTURE AND METHOD USING HYBRID FIBER COMPOSITE
Priority:	KR20090050542 20090608

Family:

Publication number	Publication date	Application number	Application date
KR100940550 B1	20100210	KR20090050542	20090608

Probable Assignee:	ORE CONSTRUCTION CO LTD
Assignee(s):(std):	CARECON CO LTD ; ORE CONSTRUCTION CO LTD
Assignee(s):	CARECON CO ; ORE CONSTRUCTION CO
Inventor(s):(std):	LEE CHIN YONG
International class (IPC 8-9):	E01D19/02 E01D22/00 E02D37/00 (Advanced/Invention); E01D19/02 E01D22/00 E02D37/00 (Advanced/Non-invention); E01D19/02 E01D22/00 E02D37/00 (Core/Invention)
CPC:	E01D22/00 E01D19/02 E02D31/00 E02D37/00

Classification Explorer

Cited documents:	KR100791360 B1, KR100675659 B1, KR100507355 B1, KR100377269 B1,
Forward Citations:	WO16198608, WO16198603,

Abstract:
PURPOSE: A reinforcing concrete structure which improves safety of a bridge and a method using a hybrid fiber composite are provided to increase the service life and the service life of the bridge by preventing the corrosion of the concrete structure. CONSTITUTION: A plurality of pillars(200) is established on the main surface of a concrete structure(100). The pillar is fixed on the concrete structure using a main anchor. A hybrid fiber reinforcing material(300) is established between the pillars. A mortar(10) is charged between the concrete structure and the hybrid fiber reinforcing material. The hybrid fiber reinforcing material comprises a first reinforcement unit and a second reinforcement unit. The second reinforcement unit is woven in a row in the direction meeting at right angle with the first reinforcement.

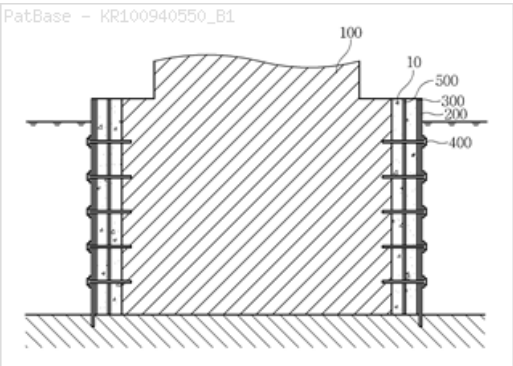

5) Family number: 64382398 (US2018111876A) © PatBase

Title: ADVANCED FIBER REINFORCED CONCRETE MIX DESIGNS AND ADMIXTURES SYSTEMS

Priority: WO2015EP63045 20150611 WO2016EP63302 20160610 WO2016EP63312 20160610

Family:

Publication number	Publication date	Application number	Application date
BR112017025418 A2	20180807	BR20171125418	20160610
BR112017026256 A2	20180911	BR20171126256	20160610
CO20170012578 A2	20180228	CO20170012578	20171206
CO20170012589 A2	20180228	CO20170012589	20171206
CR20170560 A	20180724	CR20170000560	20160610
CR20170561 A	20180724	CR20170000561	20150610
EP3307690 A1	20180418	EP20150728838	20150611
EP3307691 A1	20180418	EP20160732507	20160610
EP3307692 A1	20180418	EP20160732511	20160610
IL255597 A0	20180131	IL20160255597	20160610
IL255598 A0	20180131	IL20160255598	20160610
MX2017015570 A1	20180426	MX20170015570	20160610
MX2017015680 A1	20180418	MX20170015680	20160610
US2018111876 AA	20180426	US20160573389	20160610
US2018134620 AA	20180517	US20160573391	20160610
US2018141867 AA	20180524	US20150573678	20150611
WO16198108 A1	20161215	WO2015EP63045	20150611
WO16198603 A1	20161215	WO2016EP63302	20160610
WO16198608 A1	20161215	WO2016EP63312	20160610

Probable Assignee: CEMEX RES GROUP AG

Assignee(s):(std)**:** ESSER JEREMY ; ZAMPINI DAVIDE ; GUERINI ALEXANDRE ; VOLPATTI GIOVANNI ; CEMEX RES GROUP AG

Assignee(s): CEMEX RESEARCH GROUP AG

Inventor(s):(std)**:** ALEXANDRE GUERINI ; DAVIDE ZAMPINI ; ESSER JEREMY ; GIOVANNI VOLPATTI ; GUERINI ALEXANDRE ; JEREMY ESSER ; VOLPATTI GIOVANNI ; ZAMPINI DAVIDE

Agent(s): CAROLINA MERCEDES DAZA MONTALVO; CARVAJAL Y URQUIJO ISABEL; CARVAJAL Y URQUIJO ISABEL ET AL

Designated states: AE AG AL AM AO AT AU AZ BA BB BE BF BG BH BJ BN BR BW BY BZ CA CF CG CH CI CL CM CN CO CR CU CY CZ DE DK DM DO DZ EC EE EG ES FI FR GA GB GD GE GH GM GN GQ GR GT GW HN HR HU ID IE IL IN IR IS IT JP KE KG KM KN KP KR KZ LA LC LI LK LR LS LT LU LV LY MA MC MD ME MG MK ML MN MR MT MW MX MY MZ NA NE NG NI NL NO NZ OM PA PE PG PH PL PT QA RO RS RU RW SA SC SD SE SG SI SK SL SM SN ST SV SY SZ TD TG TH TJ TM TN TR TT TZ UA UG US UZ VC VN ZA ZM ZW

International class (IPC 8-9): C04B C04B14/04 C04B14/06 C04B14/38 C04B14/42 C04B14/48 C04B16/06 C04B28/00 C04B28/04 (Advanced/Invention);
C04B (Subclass/Invention)

International class (IPC 1-7): C04B28/00 C04B28/04

CPC: Y02W30/92 Y02W30/94 C04B16/0691 C04B14/06 C04B14/04 C04B14/42 C04B14/38 C04B16/0633 C04B14/48 C04B28/04 C04B2201/50 C04B2111/34 C04B16/0625

Classification Explorer

Cited documents: WO14094692 A1, WO11053103 A2, US2003150364 AA, KR100940550 B1, CN102976697 A, CN102206068 A, CN102092996 A,

Abstract:
A concrete mix having sand, fine aggregates, binder, fibers, and various admixtures is provided. The mix has a consistency from S2 to SF3, a compressive strength in the range of 30-80 MPa and a ductility represented by fc, ffl, fR1 and fR3 values, wherein the concrete mix contains at least 390 Kg of binder, the concrete mix has a paste volume of 300-600 liters, the concrete mix contains at least two systems of fibers and a general admixture system that is composed of at least 2 sub-admixture systems.

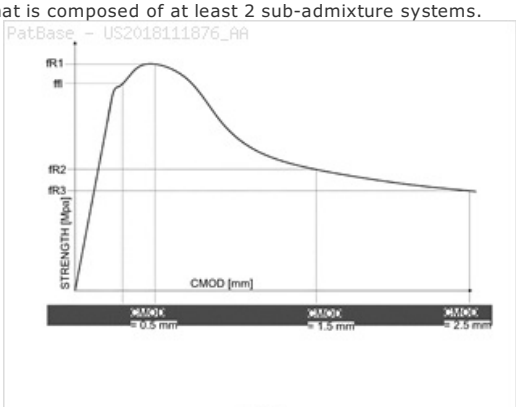

Fig. 1

6) Family number: 30580719 (US2003150364A) © PatBase

Title: FIRE-RESISTANT HIGH PERFORMANCE CONCRETE COMPOSITION

Priority: FR20000001742 20000211 DE20016005269T 20010208 EP20010907735 20010208 WO2001FR00369 20010208 WO2001FR00369 20020809

Family:

Publication number	Publication date	Application number	Application date
AT275112 E	20040915	AT20010907735T	20010208
AU2001235632 AA	20010820	AU20010235632	20010208
AU2001235632 BB	20050512	AU20010235632	20010208

AU200135632 A1	20010820	AU20010035632	20010208
AU200135632 A5	20010820	AU20010035632	20010208
BRPI0108266 A	20030305	BR2001PI08266	20010208
BRPI0108266 B1	20111227	BR2001PI08266	20010208
CA2399767 AA	20020809	CA20012399767	20010208
CA2399767 C	20100629	CA20012399767	20010208
CN1226225 C	20051109	CN20018004793	20010208
CN1398242 A	20030219	CN20018004793	20010208
CZ303809 B6	20130515	CZ20020002670	20010208
DE60105269 D1	20041007	DE20016005269	20010208
DE60105269 D1	20041007	DE20016005269T	20010208
DE60105269 T2	20050915	DE20016005269T	20010208
DE60105269 T3	20130328	DE20016005269T	20010208
DK1263690 T3	20050110	DK20010907735T	20010208
DK1263690 T4	20130107	DK20010907735T	20010208
EP1263690 A1	20021211	EP20010907735	20010208
EP1263690 B1	20040901	EP20010907735	20010208
EP1263690 B2	20120912	EP20010907735	20010208
ES2225484 T3	20050316	ES20010907735T	20010208
ES2225484 T5	20130205	ES20010907735T	20010208
FR2804952 A1	20010817	FR20000001742	20000211
FR2804952 B1	20020726	FR20000001742	20000211
HK1048296 A1	20050630	HK20030100527	20030122
HK1048296 B	20050630	HK20030100527	20030122
HU0303088 AB	20040728	HU20030003088	20010208
HU225006 B1	20060529	HU20030003088	20010208
IN203101 B	20070413	IN2002MN01063	20020806
JP2004508256 T2	20040318	JP20010558381T	20010208
JP4768950 B2	20110907	JP20010558381T	20010208
KR100728175 B1	20070613	KR20027010363	20010208
KR20030007417 A	20030123	KR20027010363	20010208
MX235550 B	20060406	MX2002PA07566	20010208
MXPA02007566 A1	20040823	MX2002PA07566	20010208
NZ520633 A	20050826	NZ20010520633	20010208
PL202841 B1	20090731	PL20010357442	20010208
PL357442 A1	20040726	PL20010357442	20010208
PT1263690 T	20050131	PT20010907735T	20010208
RU2002124130 A	20040220	RU20020124130	20010208
RU2274618 C2	20060420	RU20020124130	20010208
SI1263690 T1	20050228	SI20010030216T	20010208
SI1263690 T2	20130228	SI20010030216T	20010208
SK200201138 A5	20030911	SK20020001138	20010208
SK288156 B6	20140108	SK20020001138	20010208
UA82044 C2	20080311	UA20020806637	20010208
US2003150364 AA	20030814	US20030203378	20030220
US6881256 BB	20050419	US20030203378	20030220
WO0158826 A1	20010816	WO2001FR00369	20010208
ZA200206194 A	20031219	ZA20020006194	20020802

Probable Assignee: BOUYGUES TRAVAUX PUBLICS

Assignee(s):(std)**:** BEHLOUL MOULOUD ; BOUYGUES TRAVAUX PUBLICS ; BOUYGUES TRAVAUX PUBLICS SAINT ; CASANOVA ANDRE ; RHONE POULENC CHIMIE ; LAFARGE PARIS ; ORANGE GILLES ; PRAT EVELYNE ; RHODIA CHIMIE SA ; LAFARGE SA

Assignee(s): RHODIA CHIMIE BOULOGNE BILLANCOURT ; N A ; RHODIA CHIMIE 26 QUAI ALPHONSE LE GALLO F 92512 BOULOGNE BILLANCOURT CEDEX ; LAFARGEHOLCIM LTD ; HOLCIM TECHNOLOGY LTD ; CASANOVA PASCAL ANDRE ; LAFARGE ; CASANOVA PASCAL ; RHODIA CHIMIE ; BOUYGUES TRAVAUX PUBLICS SAINT QUENTIN EN YVELINES

Inventor(s):(std)**:** PASCAL CASANOVA ANDRE ; PRA EHVELIN ; PRAT E ; PRAT EVELYNE ; ORGANE G ; ORANZH ZHIL ; ORANGE GILLES ; MOULOUD BEHLOUL ; KAZANOVA ANDRE ; CASANOVA PASCAL ANDRE ; CASANOVA PASCAL ; CASANOVA P A ; CASANOVA G ORGANE E PRAT P A ; CASANOVA ANDRE PASCAL ; CASANOVA ANDRE ; BELUL MULU ; BEHLOUL MOULOUD ; EVELYNE PRAT ; CASANOVA ANDRU

Inventor(s): E PRAT ; ANDRE PASCAL CASANOVA ; ANDRE CASANOVA ; BELUL' MULU ; GILLES ORANGE ; G ORGANE E PRAT P A CASANOVA ; G ORGANE ; ORANZH ZHIL' ; G ORGANE E PRAT PA CASANOVA ; GILLES ORANGE AND OTHERS ; PA CASANOVA ; P A CASANOVA

Agent(s): WATERMARK PATENT AND TRADE MARKS ATTORNEYS; WATERMARK INTELLECTUAL PROPERTY PTY LTD; GOWLING LAFLEUR HENDERSON LLP; GOWLING WLG CANADA LLP; POCHART FRANCOIS; DE ELZABURU ALBERTO; ZHONGZI IP ROOM 1204 12 F SHANGHAI IND INVESTMENT BLDG 48 62 HENNESSY ROAD; YOUNG AND THOMPSON

Designated states: AE AG AL AM AT AU AZ BA BB BE BF BG BJ BR BY BZ CA CF CG CH CI CM CN CR CU CY CZ DE DK DM DZ EE ES FI FR GA GB GD GE GH GM GN GR GW HR HU ID IE IL IN IS IT JP KE KG KP KR KZ LC LI LK LR LS LT LU LV MA MC MD MG MK ML MN MR MW MX MZ NE NL NO NZ PL PT RO RU SD SE SG SI SK SL SN SZ TD TG TJ TM TR TT TZ UA UG US UZ VN YU ZA ZW

International class (IPC 8-9): C04B C04B111/28 C04B14/04 C04B14/06 C04B14/20 C04B14/38 C04B14/46 C04B14/48 C04B16/00 C04B16/06 C04B18/14 C04B20/00 C04B28/00 C04B28/02 (Advanced/Invention);
C04B111/28 C04B14/06 C04B14/20 C04B14/46 C04B14/48 C04B16/06 C04B18/14 C04B28/00 C04B28/02 (Advanced/Non-invention);
C04B16/00 C04B28/00 (Core/Invention)

International class (IPC 1-7): C04B111/28 C04B14/04 C04B14/06 C04B14/20 C04B14/38 C04B14/46 C04B14/48 C04B16/06 C04B18/02 C04B18/14 C04B20/00 C04B24/00 C04B28/00 C04B28/02

CPC: C04B28/02 C04B2111/28 C04B2201/52 Y02W30/94

European class: C04B28/02 M04B111/28 M04B201/52

US class: 106/640 106/643 106/644 106/644S 106/708 106/708S 106/724 106/724S 106/725 106/725S 106/802 252/601

Classification Explorer

Cited documents: WO9958468 A1, WO9928267 A1, WO9827022 A1, WO98027022, WO9601787 A1, WO9501316 A1, US5749961 A, JP9500352 T2, JP9500352, JP6211555 A2, JP2002514567 T2, JP2002514567, JP11246255 A2, FR2778654 A1, EP0934915 A1, EP0372804 A2, DE19654502 A1, CS205320 B1,

Forward Citations: WO16198608, WO16198603, WO16198108, WO14094183, WO14029039, WO12020012, WO11095744, WO10130927, WO10105980, WO09075609, WO09011480, WO08021579, WO05032780, WO05032780, WO03020659, US9914242, US9353006, US9267211, US9260314, US9187895, US9133581, US8945437, US8912250, US8894830, US8883104, US8869477, US8834688, US8734689, US8603424, US8491858, US8470275, US8431100, US8357270, US8333944, US8221540, US8177930, US8137444, US8118925, US8043425, US8006446, US7993500, US7901615, US7793480, US7670130, US7641731, US7600943, US7316743, US7270704, US6887309, US6694690, US2015315079, US2015159371, US2012096795, US2011091366, US2010326328, US2010313794, US2010313793, US2010267864, US2010263315, US2010230293, US2010183840, US2010140103, US2010068401, US2010051859, US2009162626, US2008314293, US2008292868, US2008141608, US2008127605, US2008118637, US2008113193, US2008028711, US2008003398, US2007176076, US2007163470, US2006058173, US2005158532, US2004244332, US2004050302, US2003039348, US2002046524, US10071934, US10000587, TWI444348, RU2467968, KR20110128183, KR101698619, KR101439786, KR100704056, JP2015061967, JP2010513761, JP2006290722, GB2378470, FR2919638, FR2900922, FR2860788, FR2837819, FR2808795, ES2376211, ES2251857, EP2492254, EP2033757, EP1923374, EP1288176, DE102015107447, CZ304478, CN106517942, CN104446227, CN104193232, CN104030652, CN104030652, CN103373840, CN103314168, CN102356187, CN102173681, CN102092996, AU2010225025,

Abstract:
The invention concerns the use of organic fibres having a melting point lower than 300 degrees centigrade, an average length l more than 1 mm and a diameter oe not more than 200 mum, in ultra high performance concrete for improving the concrete fire resistance, the amount of organic fibres being such that their volume ranges between 0.1 and 3 percent of the concrete volume after setting and the concrete having a compressive strength at 28 days of at least 120 Mpa, a bending strength of at least 20 Mpa, and a spread value in non-hardened state of at least 150 mm, the values being for a concrete preserved at 20 degrees centigrade, the concrete consisting of a particularly hardened cement matrix wherein metal fibres are dispersed.

PatBase - NZ520633_A

END

7) Family number: 49105922 (CN102092996A)

© PatBase

Title: CEMENT-BASED COMPOSITE MATERIAL WITH HIGH-TEMPERATURE RESISTANCE AND SUPERHIGH PERFORMANCE AND PREPARATION METHOD THEREOF

Priority: CN201010565136 20101130

Family:

Publication number	Publication date	Application number	Application date
CN102092996 A	20110615	CN201010565136	20101130

Probable Assignee: UNIV NANJING SCIENCE AND TECH

Assignee(s):(std)**:** NANJING UNIV OF SCIENCE AND TECHNOLOGY ; UNIV NANJING SCIENCE AND TECH

Assignee(s): NANJING UNIVERSITY OF SCIENCE AND TECHNOLOGY

Inventor(s):(std)**:** JIANZHONG LAI ; SHENG XU ; CHUNMEI YANG ; PEIPEI LI ; SHIHUA ZHANG

Inventor(s): YANG CHUNMEI ; ZHANG SHIHUA ; XU SHENG ; LAI JIANZHONG ; LI PEIPEI

International class (IPC 8-9): C04B16/06 C04B28/00 C04B28/08 (Advanced/Invention)

CPC: C04B28/02 Y02W30/92 Y02W30/94

Classification Explorer

Cited documents: US2008190062 AA, CN1403402 A, CN1398242 A, CN1279220 A, CN101863641 A, CN101244922 A,

Forward Citations: WO16198608, WO16198603, WO16198108, WO14094692, ITUB20160072, CN106478025, CN106045353, CN106045353, CN105948582, CN105753400, CN105060783, CN104058650, CN104058650, CN103910531, CN103159487, CN102503312,

Abstract:
The invention discloses a cement-based composite material with high-temperature resistance and superhigh performance and a preparation method thereof. The cement-based composite material comprises the raw materials of a gelled material, an aggregate, fibers, a water reducing agent and water, wherein the gelled material is a mixture of cement and active mineral

admixture, the aggregate is yellow sand or a mixture of yellow sand and pebbles, and the fibers are organic fibers or mixtures of organic fibers and metal fibers. The cement-based composite material is produced through improvement on the basis of common concrete manufacturing, has the properties of superhigh mechanical property and high-temperature resistance, is applicable to high-temperature resistant engineering structures, and is favorable for preventing the collapse and the destruction of the construction structures in a fire disaster.

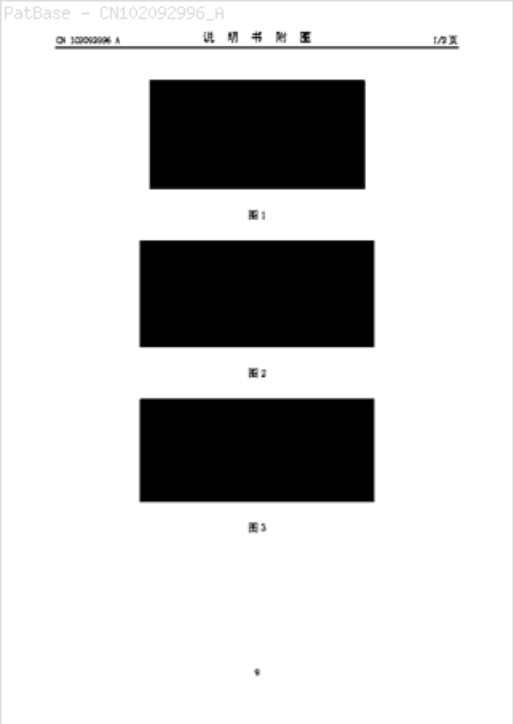

8) Family number: 56530993 (WO14094692A4)

© PatBase

Title: ULTRA-HIGH STRENGTH STEEL FIBRE REINFORCED CONCRETE

Priority: CZ20120000903 20121217 WO2013CZ00161 20131205

Family:

Publication number	Publication date	Application number	Application date
CZ20120903 A3	20140521	CZ20120000903	20121217
CZ304478 B6	20140521	CZ20120000903	20121217
DE112013006042 T5	20151119	DE201311006042T	20131205
SK201550010 A5	20150804	SK20150050010	20131205
SK288599 B6	20181001	SK20150050010	20131205
WO14094692 A1	20140626	WO2013CZ00161	20131205
WO14094692 A4	20140828	WO2013CZ00161	20131205

Probable Assignee: CZECH TECHNICAL UNIV IN PRAGUE

Assignee(s):(std)**:** CESKE VUT V PRAZE FAKULTA STAVEBNI ; CZECH TECHNICAL UNIV IN PRAGUE

Assignee(s): CESKE VYSOKE UCENI TECHNICKE V PRAZE FAKULTA STAVEBNI

Inventor(s):(std)**:** VODICKA JAN ; KOHOUTKOVA ALENA ; FLADR JOSEF ; BROUKALOVA IVA

Agent(s): DUŠKOVA HANA

Designated states: AE AG AL AM AO AT AU AZ BA BB BE BF BG BH BJ BN BR BW BY BZ CA CF CG CH CI CL CM CN CO CR CU CY CZ DE DK DM DO DZ EC EE EG ES FI FR GA GB GD GE GH GM GN GQ GR GT GW HN HR HU ID IE IL IN IR IS IT JP KE KG KM KN KP KR KZ LA LC LK LR LS LT LU LV LY MA MC MD ME MG MK ML MN MR MT MW MX MY MZ NA NE NG NI NL NO NZ OM PA PE PG PH PL PT QA RO RS RU RW SA SC SD SE SG SI SK SL SM SN ST SV SY SZ TD TG TH TJ TM TN TR TT TZ UA UG US UZ VC VN ZA ZM ZW

International class (IPC 8-9): C04B14/00 C04B14/02 C04B14/38 C04B14/48 C04B18/00 C04B28/02 C04B32/02 (Advanced/Invention)

CPC: C04B28/02 C04B2201/52

Classification Explorer

Cited documents: MY115314 A, JP1162267 A2, EP2492254 A1, CZ303809 B6, CZ301900 B6, CZ301483 B6, CN102092996, CN101318801,

Forward Citations: WO16198608, WO16198603, WO16198108, ITUB20160072, EP3351518, CZ305508,

Abstract:
Ultra-high strength steel fibre reinforced concrete with cement matrix contains silica cement, basalt aggregate, steel fibres, admixtures and additives. The dosage of admixtures is given by the results of the porosity tests of basalt aggregate and steel fibres mixture. The admixtures are dosed so that the required workability is reached; according to real application. There is 600 to 1000 kg/m3 of silica cement in cement matrix, basalt aggregate has three sieve sizes, namely 0-4, 4-8 and 8-16, the total dose of basalt aggregate is in the range 1500 and 2000 kg/m3. Ratio of sieve sizes is determined by granulometry and mineralogical composition of particular source of basalt aggregate. Water/cement ratio ranges between 0.16 and 0.25. Two types of steel fibres are evenly distributed in the volume of hardened steel fibre reinforced concrete. The first type of fibres has rectangular section with width ranging between 0.2 and 0.5 mm, height between 1.5 and 2.0 mm and length between 25 and 35 mm with strength between 350 and 450 MPa. The second type of steel fibres has circular section with diameter ranging between 0.08 and 0.12 mm, their length ranges between 8 and 15 mm and their strength is higher than 2000 MPa. The total weight of both types of fibres ranges between 100 and 280 kg/m3.

PatBase - SK288599_B6

Obrázok 1

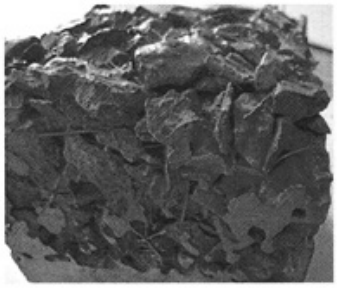

Obrázok 2