PatBase - Search results 21 March 2019

Search query (3): [SP]: cross-reference to related applications[0001] this application claims the benefit of priority to u.s. provisional patent application no. 62/050,738 filed sep. 15, 2014, the disclosure of which is incorporated herein by reference in its entirety.technical field[0002] the present technology is generally directed to use of precast geometric shapes in horizontal heat recovery coke ovens, non-heat recovery coke ovens, and beehive coke ovens, for example, use of a monolith components to construct a horizontal coke oven.background[0003] coke is a solid carbon fuel and carbon source used to melt and reduce iron ore in the production of steel. in one process, known as the "thompson coking process," coke is produced by batch feeding pulverized coal to an oven that is sealed and heated to very high temperatures for 24 to 48 hours under closely-controlled atmospheric conditions. coking ovens have been used for many years to convert coal into metallurgical coke. during the coking process, finely crushed coal is heated under controlled temperature conditions to devolatilize the coal and form a fused mass of coke having a predetermined porosity and strength. because the production of coke is a batch process, multiple coke ovens are operated simultaneously.[0004] the melting and fusion process undergone by the coal particles during the heating process is an important part of coking. the degree of melting and degree of assimilation of the coal particles into the molten mass determine the characteristics of the coke produced. in order to produce the strongest coke from a particular coal or coal blend, there is an optimum ratio of reactive to inert entities in the coal. the porosity and strength of the coke are important for the ore refining process and are determined by the coal source and/or method of coking.[0005] coal particles or a blend of coal particles are charged into hot ovens, and the coal is heated in the ovens in order to remove volatile matter ("vm") from the resulting coke. the coking process is highly dependent on the oven design, the type of coal, and the conversion temperature used. typically, ovens are adjusted during the coking process so that each charge of coal is coked out in approximately the same amount of time. once the coal is "coked out" or fully coked, the coke is removed from the oven and quenched with water to cool it below its ignition temperature. alternatively, the coke is dry quenched with an inert gas. the quenching operation must also be carefully controlled so that the coke does not absorb too much moisture. once it is quenched, the coke is screened and loaded into rail cars or trucks for shipment.[0006] because coal is fed into hot ovens, much of the coal feeding process is automated. in slot-type or vertical ovens, the coal is typically charged through slots or openings in the top of the ovens. such ovens tend to be tall and narrow. horizontal non-recovery or heat recovery type coking ovens are also used to produce coke. in the non-recovery or heat recovery type coking ovens, conveyors are used to convey the coal particles horizontally into the ovens to provide an elongate bed of coal.[0007] as the source of coal suitable for forming metallurgical coal ("coking coal") has decreased, attempts have been made to blend weak or lower quality coals ("non-coking coal") with coking coals to provide a suitable coal charge for the ovens. one way to combine non-coking and coking coals is to use compacted or stamp-charged coal. the coal may be compacted before or after it is in the oven. in some embodiments, a mixture of non-coking and coking coals is compacted to greater than 50 pounds per cubic foot in order to use non-coking coal in the coke making process. as the percentage of non-coking coal in the coal mixture is increased, higher levels of coal compaction are required (e.g., up to about 65 to 75 pounds per cubic foot). commercially, coal is typically compacted to about 1.15 to 1.2 specific gravity (sg) or about 70-75 pounds per cubic foot.[0008] horizontal heat recovery ("hhr") ovens have a unique environmental advantage over chemical byproduct ovens based upon the relative operating atmospheric pressure conditions inside hhr ovens. hhr ovens operate under negative pressure, whereas chemical byproduct ovens operate at a slightly positive atmospheric pressure. both oven types are typically constructed of refractory bricks and other materials in which creating a substantially airtight environment can be a challenge because small cracks can form in these structures during day-to-day operation. chemical byproduct ovens are kept at a positive pressure to avoid oxidizing recoverable products and overheating the ovens. conversely, hhr ovens are kept at a negative pressure, drawing in air from outside the oven to oxidize the coal's vm and to release the heat of combustion within the oven. it is important to minimize the loss of volatile gases to the environment, so the combination of positive atmospheric conditions and small openings or cracks in chemical byproduct ovens allow raw coke oven gas ("cog") and hazardous pollutants to leak into the atmosphere. conversely, the negative atmospheric conditions and small openings or cracks in the hhr ovens or locations elsewhere in the coke plant simply allow additional air to be drawn into the oven or other locations in the coke plant so that the negative atmospheric conditions resist the loss of cog to the atmosphere.[0009] hhr ovens have traditionally been unable to turn down their operation (e.g., their coke production) significantly below their designed capacity without potentially damaging the ovens. this restraint is linked to temperature limitations in the ovens. more specifically, traditional hhr ovens are primarily made of silica brick. when a silica oven is built, burnable spacers are placed between the bricks in the oven crown to allow for brick expansion. once the oven is heated, the spacers burn away and the bricks expand into adjacency. once hhr silica brick ovens are heated, they are never allowed to drop below the silica brick thermally-volume-stable temperature, the temperature above which silica is generally volume-stable (i.e., does not expand or contract). if the bricks drop below this temperature, the bricks start to contract. since the spacers have burned out, a traditional crown can contract up to several inches upon cooling. this is potentially enough movement for the crown bricks to start to shift and potentially collapse. therefore, enough heat must be maintained in the ovens to keep the bricks above the thermally-volume-stable temperature. this is the reason why it has been stated that a hhr oven can never be turned off because the ovens cannot be significantly turned down, during periods of low steel and coke demand, coke production must be sustained. further, it can be difficult to perform maintenance on heated hhr ovens. other portions of the coke oven system can suffer from similar thermal and/or structural limitations. for example, the crown of a sole flue running under the oven floor can collapse or otherwise suffer from heaving of the oven floor, ground settling, thermal or structural cycling, or other fatigue. these stresses can cause bricks in the sole flue to shift and drop out.brief description of the drawings[0010] fig. 1a is an isometric, partial cut-away view of a portion of a horizontal heat recovery coke plant configured in accordance with embodiments of the present technology.[0011] fig. 1b is a top view of a sole flue portion of a horizontal heat recovery coke oven configured in accordance with embodiments of the technology.[0012] fig. 1c is a front view of a monolith crown for use with the sole flue shown in fig. 1b and configured in accordance with embodiments of the technology.[0013] fig. 2a is an isometric view of a coke oven having a monolith crown configured in accordance with embodiments of the technology.[0014] fig. 2b is a front view of the monolith crown of fig. 2a moving between a contracted configuration and an expanded configuration in accordance with embodiments of the technology.[0015] fig. 2c is a front view of oven sidewalls for supporting a monolith crown configured in accordance with further embodiments of the technology.[0016] fig. 2d is a front view of oven sidewalls for supporting a monolith crown configured in accordance with further embodiments of the technology.[0017] fig. 3 is an isometric view of a coke oven having a monolith crown configured in accordance with further embodiments of the technology.[0018] fig. 4a is an isometric view of a coke oven having a monolith crown configured in accordance with still further embodiments of the technology.[0019] fig. 4b is a front view of the monolith crown of fig. 4a configured in accordance with further embodiments of the technology.[0020] fig. 5a is an isometric, partial cut-away view of a monolith sole flue portion of a horizontal heat recovery coke oven configured in accordance with embodiments of the technology.[0021] fig. 5b is an isometric view of a section of a monolith sole flue wall for use with the monolith sole flue shown in fig. 5a and configured in accordance with embodiments of the technology.[0022] fig. 5c is an isometric view of a blocking wall section for use with the monolith sole flue shown in fig. 5a and configured in accordance with embodiments of the technology.[0023] fig. 5d is an isometric view of another section of monolith sole flue wall for use with the monolith sole flue shown in fig. 5a and configured in accordance with embodiments of the technology.[0024] fig. 5e is an isometric view of a monolith outer sole flue wall section with fluid channel

Results: 14

1) Family number: 961143 (US3592742A)

© PatBase

Title: FOUNDATION COOLING SYSTEM FOR SOLE FLUE COKING OVENS

Abstract: ABSTRACT OF THE DISCLOSURE
A cooling system for the support structure of a coking oven having a plurality of heating flues extending beneath the floor to supply heat to the coking chamber. A plurality of air ducts, or tunnels extend beneath the sole flues in the oven support structure and one into the oven stack to draw cooling air through the support structure beneath the sole flues and discharge it directly into the waste gas in the stack to reduce the temperature of the support structure. This is a continuation-in-part of copending application Ser. No. 660,322, filed Aug. 14, 1967, now abandoned.

Classifications:
International (IPC 8-9): C10B15/02 C10B29/00 (Advanced/Invention);
C10B15/00 C10B29/00 (Core/Invention)
International (IPC 1-7): C10B29/08 C10B5/06
CPC: C10B15/02 C10B29/00
European: C10B15/02 C10B29/00
US: 202/102 202/145

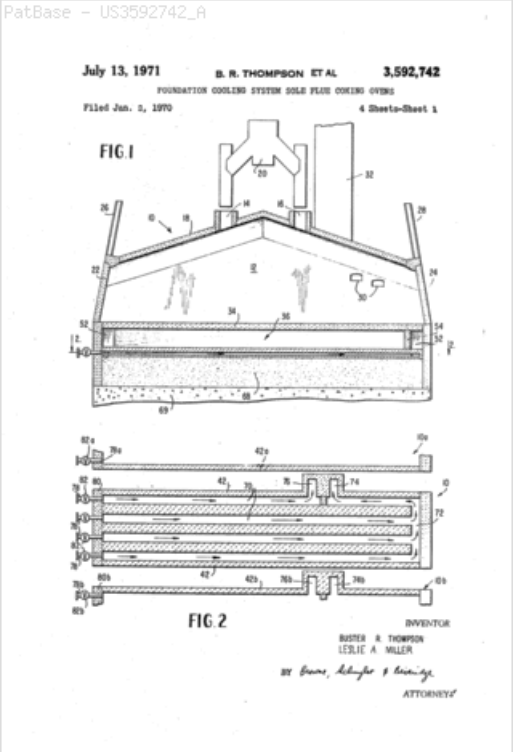

Family:

Publication number	Publication date	Application number	Application date
US3592742 A	19710713	US19700009333	19700206

Priority:

US19700009333 19700206

Probable Assignee:	ELK RIVER RESOURCES INC
Assignee(s): (std):	BUSTER R THOMPSON ; LESLIE A MILLER
Assignee(s):	ELK RIVER RESOURCES INC
Inventor(s): (std):	THOMPSON BUSTER R ; MILLER LESLIE A
Inventor(s):	BUSTER R THOMPSON ; LESLIE A MILLER

2) Family number: 61323183 (US2017137714A)

© PatBase

Title: HORIZONTAL HEAT RECOVERY COKE OVENS HAVING MONOLITH CROWNS

Abstract: The present technology is generally directed to horizontal heat recovery and non-heat recovery coke ovens having monolith crowns. In some embodiments, an HHR coke oven includes a monolith crown that spans the width of the oven between opposing oven sidewalls. The monolith expands upon heating and contracts upon cooling as a single structure. In further embodiments, the crown comprises a thermally-volume-stable material. The crown may be an oven crown, an upcommer arch, a downcommer arch, a J-piece, a single sole flue arch or multiple sole flue arches, a downcommer cleanout, curvilinear corner sections, and/or combined portions of any of the above sections. In some embodiments, the crown is formed at least in part with a thermally-volume-stable material. In further embodiments, the crown is formed as a monolith (or several monolith segments) spanning between supports such as oven sidewalls. In various embodiments, the monolith and thermally-volume-stable features can be used in combination or alone. These designs can allow the oven to be turned down below traditionally feasible temperatures while maintaining the structural integrity of the crown.

Classifications:
International (IPC 8-9): C10B15/02 C10B29/02 C10B29/04 C10B5/06 (Advanced/Invention)
CPC: C10B29/04 C10B5/06 C10B29/02 C10B15/02

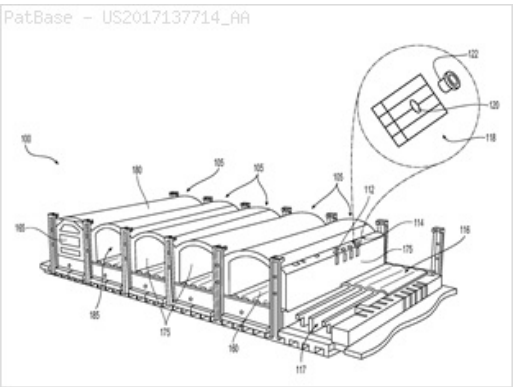

Family:

Publication number	Publication date	Application number	Application date

AU2015284198 AA	20170202	AU20150284198	20150630
BR112016030880 A2	20170822	BR20161130880	20150630
CA2954063 AA	20161230	CA20152954063	20150630
CN106661456 A	20170510	CN201580038732	20150630
CO20170000523 A2	20170410	CO20170000523	20170123
EP3161106 A1	20170503	EP20150815180	20150630
EP3161106 A4	20180221	EP20150815180	20150630
IN201637044911 A	20170505	IN201637044911	20161229
KR20170020822 A	20170224	KR20167036961	20150630
US2017137714 AA	20170518	US20150322176	20150630
WO16004106 A1	20160107	WO2015US38663	20150630

Priority:

US20140019385P 20140630 US20150322176 20150630 WO2015US38663 20150630

Probable Assignee: SUNCOKE TECHNOLOGY AND DEVELOPMENT LLC

Assignee(s): (std): SUNCOKE TECH AND DEV LLC ; SUNCOKE TECH AND DEVELOPMENT LLC ; SUNCOKE TECHNOLOGY AND DEV LLC

Assignee(s): SUNCOKE TECHNOLOGY AND DEVELOPMENT LLC ; WEST GARY DEAN ; BANK OF AMERICA NA ADMINISTRATIVE AGENT AS ; QUANCI JOHN FRANCIS

Inventor(s): (std): QUANCI JOHN FRANCIS ; WEST GARY DEAN

Inventor(s): GARY DEAN WEST ; JOHN FRANCIS QUANCI

Agent(s): SPRUSON AND FERGUSON; GOWLING WLG CANADA LLP; JOSE ANDRES RINCON USCATEGUI; BEATTIE ALEX THOMAS STEWART; NIEBERGALL SHANE M ET AL

Designated states: AE AG AL AM AO AT AU AZ BA BB BE BF BG BH BJ BN BR BW BY BZ CA CF CG CH CI CL CM CN CO CR CU CY CZ DE DK DM DO DZ EC EE EG ES FI FR GA GB GD GE GH GM GN GQ GR GT GW HN HR HU ID IE IL IN IR IS IT JP KE KG KM KN KP KR KZ LA LC LI LK LR LS LT LU LV LY MA MC MD ME MG MK ML MN MR MT MW MX MY MZ NA NE NG NI NL NO NZ OM PA PE PG PH PL PT QA RO RS RU RW SA SC SD SE SG SI SK SL SM SN ST SV SY SZ TD TG TH TJ TM TN TR TT TZ UA UG US UZ VC VN ZA ZM ZW

3) Family number: 51579256 (CN102584294A)

© PatBase

Title: COMPOSITE FIRE-PROOF MATERIAL WITH HIGH REFRACTORINESS UNDER LOAD FOR COKE OVENS AS WELL AS FURNACE-BUILDING PROCESS AND PRODUCTS THEREOF

Abstract: The invention discloses a composite fire-proof material with high refractoriness under load for coke ovens. The preparation method of the material comprises the following steps of: evenly mixing and crushing 40 percent -60 percent of Al2O3, 15 percent -30 percent of SiC micro powder, less than 2 percent of Fe2O3, 5 percent -10 percent of Si micro powder and 1 percent -3 percent of cement as an additive; adding 3 percent -5 percent of Al(H2PO4)3 as an adhesive and stirring and mixing evenly; and pouring the mixture to a working region in 20-30 minutes. The furnace-building process comprises the following steps of: cleaning a kiln, measuring, molding, positioning and supporting a mould, adding materials, pouring and correcting, cleaning, starting for warming up and testing. The coke ovens newly built by pouring is characterized in that the top of the chamber of the furnace is fan-shaped, the chamber of the furnace is built by on-site seamless overall vibration pouring according to the process above with the furnace-building materials above, afterheat of the furnace can be recycled for power generation and no chemical residues exist. The furnace is short in charring time and higher in coke recovery and can be started and used at any time between the normal temperature and 1550 DEG C.

Classifications:
International (IPC 8-9): C04B35/66 C10B15/00 (Advanced/Invention)
CPC: C10B29/02 Y02P20/129

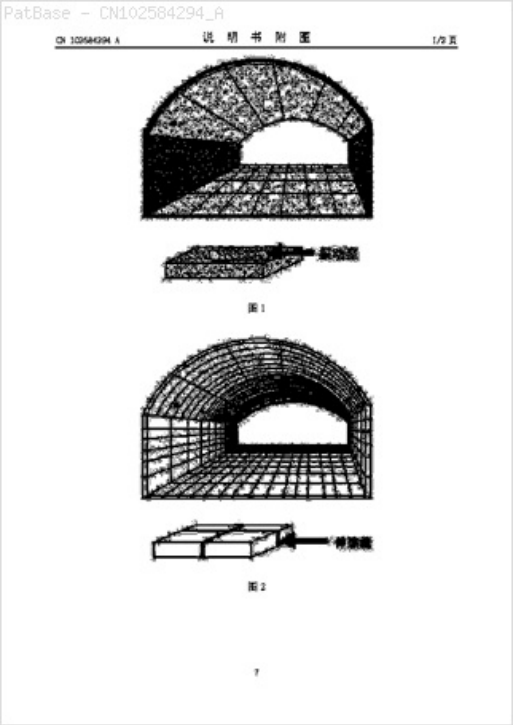

Family:

Publication number	Publication date	Application number	Application date

CN102584294 A	20120718	CN201210047835	20120228
CN102584294 B	20130605	CN201210047835	20120228

Priority:

CN201210047835 20120228

Probable Assignee: GUIYANG DONGJIBOYU REFRACTORY MATERIALS CO LTD

Assignee(s): (std): GUIYANG DONGJIBOYU REFRACTORY MATERIALS CO LTD

Assignee(s): GUIYANG DONGJIBOYU REFRACTORY MATERIALS CO

Inventor(s): (std): BAI JING ; YANG XINGGUO ; WANG HAIJUN ; JING BAI ; HAIJUN WANG ; XINGGUO YANG

4) Family number: 56832368 (US2014182683A)

© PatBase

Title: EXHAUST FLOW MODIFIER, DUCT INTERSECTION INCORPORATING THE SAME, AND METHODS THEREFOR

Abstract: A duct intersection comprising a first duct portion and a second duct portion extending laterally from a side of the first duct portion. At least one flow modifier is mounted inside one of the first and second duct portions. The flow modifier is a contoured duct liner and/or the flow modifier includes at least one turning vane. The duct intersection may also include a transition portion extending between the first and second duct portions, wherein the transition portion has a length extending along a side of the first duct portion and a depth extending away from the side of the first duct portion, wherein the length is greater than a diameter of the second duct portion.

Classifications:

International (IPC 8-9): C10B15/02 C10B21/00 C10B27/06 C10B45/00 C10B5/08 C10B5/16 F01K3/18 F17D1/02 F23J11/00 H02K7/18 (Advanced/Invention)

CPC: Y10T137/85938 Y10T137/87652 Y10T137/87676 Y10T137/0318 C10B27/06 F01K3/185 H02K7/1823 F17D1/02 C10B15/02 C10B45/00

US: 1/1 137/1 138/39 201/37 202/151 202/254

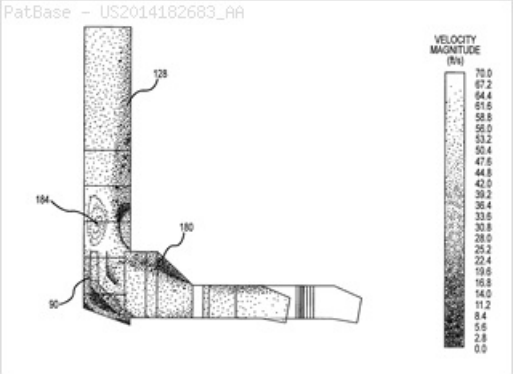

Family:

Publication number	Publication date	Application number	Application date
BR102013000283 A2	20160419	BR20131000283	20130104
BR112015023324 A2	20170718	BR20151123324	20140314
CA2906066 AA	20150911	CA20142906066	20140314
CN105189703 A	20151223	CN201480014884	20140314
CN105189703 B	20180202	CN201480014884	20140314
EP2970768 A1	20160120	EP20140768073	20140314
EP2970768 A4	20161102	EP20140768073	20140314
IN02523KN2015 A	20160205	IN2015KN02523	20150803
US2014182683 AA	20140703	US20120730673	20121228
US2014183024 AA	20140703	US20130830971	20130314
US2017015908 AA	20170119	US20160281891	20160930
US9476547 BB	20161025	US20120730673	20121228
US10047295 BB	20180814	US20130830971	20130314
WO14152860 A1	20140925	WO2014US28019	20140314

Priority:

US20120730673 20121228 US20130830971 20130314 WO2014US28019 20140314 US20160281891 20160930

Probable Assignee: SUNCOKE TECHNOLOGY AND DEVELOPMENT LLC

Assignee(s): (std): DEV LLC SUNCOKE TECHNOLOGY AND ; SUNCOKE TECHNOLOGY AND DEV LLC ; SUNCOKE TECH AND DEV LLC ; SUNCOKE TECH AND DEVELOPMENT LLC

Assignee(s): KAPOOR RAJAT ; KAPLAREVIC MILOS ; QUANCI JOHN FRANCIS ; DEVELOPMENT LLC SUNCOKE TECHNOLOGY AND ; SUNCOKE TECHNOLOGY AND DEVELOPMENT LLC ; BANK OF AMERICA NA ADMINISTRATIVE AGENT AS ; CHOI CHUN WAI ; CHUN UNG KYUNG

Inventor(s): (std): MILOS KAPLAREVIC ; UNG KYUNG CHUN ; UNG KYUNG ; RAJAT KAPOOR ; KAPLAREVIC MILOS ; JOHN FRANCIS QUANCI ; CHUN WAI CHOI ; QUANCI JOHN FRANCIS ; KAPOOR RAJAT ; CHUN UNG KYUNG ; CHOI CHUN WAI

Agent(s): GOWLING LAFLEUR HENDERSON LLP; BOULT WADE TENNANT; PERKINS COIE LLP; BETCHER SUSAN D ET AL

Designated states: AE AG AL AM AO AT AU AZ BA BB BE BF BG BH BJ BN BR BW BY BZ CA CF CG CH CI CL CM CN CO CR CU CY CZ DE DK DM DO DZ EC EE EG ES FI FR GA GB GD GE GH GM GN GQ GR GT GW HN HR HU ID IE IL IN IR IS IT JP KE KG KM KN KP KR KZ LA LC LI LK LR LS LT LU LV LY MA MC MD ME MG MK ML MN MR MT MW MX MY MZ NA NE NG NI NL NO NZ OM PA PE PG PH PL PT QA RO RS RU RW SA SC SD SE SG SI SK SL SM SN ST SV SY SZ TD TG TH TJ TM TN TR TT TZ UA UG US UZ VC VN ZA ZM ZW

5) Family number: 1303419 (US3969191A)

Title: Control for regenerators of a horizontal coke oven

Abstract: In a horizontal coke oven, the regenerators therefor include columns of superimposed checkerbricks supported at their lower ends on horizontal partitions forming stationary ports that conduct gaseous media between an underlying sole flue and the various sections of the regenerator. Movable plates with portal openings contiguous with the stationary ports are adjustable in the direction of the length of the sole flues for determining the extent to which the stationary ports are masked by the plate. Grooves are formed at the underside of the stationary ports for guiding the side edges of the movable plates. Pegs extend from the lower surface of the plates. In one embodiment, trough-shaped support members in the sole flue carry an adjusting rod that extends along the flue from the coke discharge side of the oven. Fingers extend radially from the rod to engage the pegs to move the plates in an adjustable manner. In a second embodiment, vertically-arranged rods extend from the cellar of an underjet fired oven through the roof of the cellar into the sole flues where the end of the rods carry forked guide members to engage the pegs projecting from the undersurface of the movable plates.

Classifications:
International (IPC 8-9): C10B5/12 (Advanced/Invention); C10B5/00 (Core/Invention)
International (IPC 1-7): C10B21/10 C10B21/16 C10B21/20 C10B37/00 C10B5/12 C10B5/18
CPC: C10B5/12
European: C10B5/12
US: 202/141

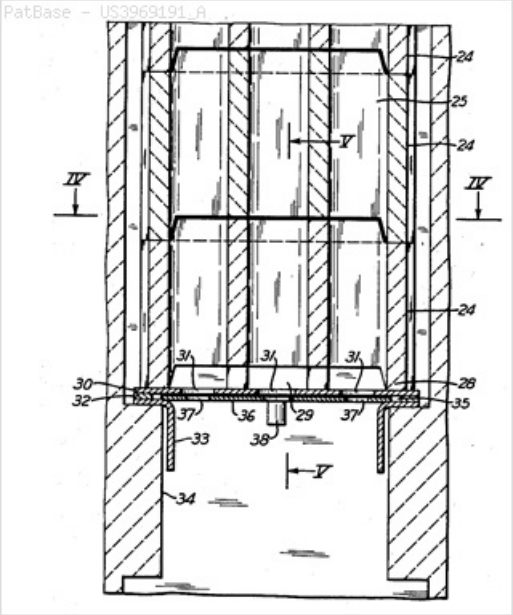

Family:

Publication number	Publication date	Application number	Application date
DE2327983 A1	19750102	DE19732327983	19730601
DE2327983 B2	19760819	DE19732327983	19730601
DE2327983 C3	19770407	DE19732327983	19730601
FR2231732 A1	19741227	FR19740019093	19740531
FR2231732 B1	19790420	FR19740019093	19740531
IN142465 A	19770716	IN1974CA01565	19740712
IT1013203 A	19770330	IT19740051164	19740522
JP50053401 A2	19750512	JP19730114870	19731015
JP52043481 B4	19771031	JP19730114870	19731015
JP915568 C3	19780721	JP19730114870	19731015
US3969191 A	19760713	US19740474374	19740530

Priority:
DE19732327983 19730601

Probable Assignee: OTTO AND CO GMBH DR C

Assignee(s): (std): O OTTO U CO GMBH DR ; OTTO AND CO GMBH DR C

Assignee(s): OTTO ET COMP GMBH C ; OTTO ET COMP GMBH C DT ; C OTTO AND CO GMBH ; DR C OTTO AND CO GMBH 4630 BOCHUM ; DR C OTTO AND COMP G M B H

Inventor(s): (std): BOLLENBACH G ; BOLLENBACH GUENTHER ; BOLLENBACH GUNTHER

Inventor(s): BOLLENBACH GUENTHER 4690 HERNE

6) Family number: 57414433 (US2014262726A)

Title: HORIZONTAL HEAT RECOVERY COKE OVENS HAVING MONOLITH CROWNS

Abstract: The present technology is generally directed to horizontal heat recovery coke ovens having monolith crowns. In some embodiments, an HHR coke oven includes a monolith crown that spans the width of the oven between opposing oven sidewalls. The monolith expands upon heating and contracts upon cooling as a single structure. In further embodiments, the crown comprises a thermally volume-stable material. In various embodiments, the monolith and thermally-volume-stable features can be used in combination or alone. These designs can allow the oven to be turned down below traditionally feasible temperatures while maintaining the structural integrity of the crown.

Classifications:
International (IPC 8-9): C10B15/02 C10B21/00 C10B21/10 C10B29/00 C10B29/02 C10B29/04 C10B5/00 (Advanced/Invention)
International (IPC 1-7): C10B21/00 C10B29/00
CPC: C10B29/02 C10B15/02 C10B5/00 C10B21/10 C10B29/04 Y02P20/129

US: 1/1 201/14 202/93

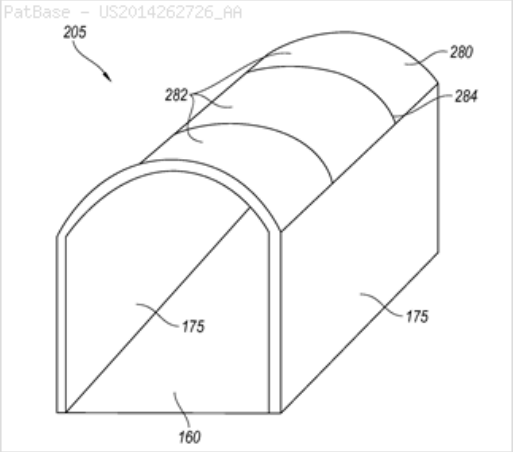

Family:

Publication number	Publication date	Application number	Application date
BR112015010451 A2	20160809	BR20151110451	20140314
BR112015010451 B1	20171031	BR20151110451	20140314
CA2903836 AA	20150902	CA20142903836	20140314
CA2903836 C	20170822	CA20142903836	20140314
CN105189704 A	20151223	CN201480014799	20140314
CN105778931 A	20160720	CN201610146244	20140314
DE602014022473 D1	20180412	DE201460022473T	20140314
EP2970769 A1	20160120	EP20140769676	20140314
EP2970769 A4	20161102	EP20140769676	20140314
EP3075818 A1	20161005	EP20160161750	20140314
EP3075818 B1	20180314	EP20160161750	20140314
IN00512KN2015 A	20150717	IN2015KN00512	20150227
PL3075818 T3	20180731	PL20160161750T	20140314
US2014262726 AA	20140918	US20130829588	20130314
US9193915 BB	20151124	US20130829588	20130314
WO14153050 A1	20140925	WO2014US28837	20140314

Priority:

US20130829588 20130314 CN201480014799 20140314 EP20140769676 20140314
WO2014US28837 20140314 EP20160161750 20140314

Probable Assignee: SUNCOKE TECHNOLOGY AND DEVELOPMENT LLC

Assignee(s): (std): QUANCI JOHN FRANCIS ; SUNCOKE TECH AND DEV LLC ; SUNCOKE TECH AND DEVELOPMENT LLC ; WEST GARY DEAN ; SUNCOKE TECHNOLOGY AND DEV LLC

Assignee(s): SUNCOKE TECHNOLOGY AND DEVELOPMENT LLC LISLE ; BANK OF AMERICA NA ADMINISTRATIVE AGENT AS ; SUNCOKE TECHNOLOGY AND DEVELOPMENT LLC

Inventor(s): (std): GARY DEAN WEST ; JOHN FRANCIS QUANCI ; QUANCI JOHN FRANCIS ; WEST GARY DEAN

Inventor(s): WEST GARY DEAN LISLE ; QUANCI JOHN FRANCIS LISLE

Agent(s): GOWLING LAFLEUR HENDERSON LLP; GOWLING WLG CANADA LLP; BOULT WADE TENNANT; PERKINS COIE LLP; BETCHER SUSAN D ET AL

Designated states: AE AG AL AM AO AT AU AZ BA BB BE BF BG BH BJ BN BR BW BY BZ CA CF CG CH CI CL CM CN CO CR CU CY CZ DE DK DM DO DZ EC EE EG ES FI FR GA GB GD GE GH GM GN GQ GR GT GW HN HR HU ID IE IL IN IR IS IT JP KE KG KM KN KP KR KZ LA LC LI LK LR LS LT LU LV LY MA MC MD ME MG MK ML MN MR MT MW MX MY MZ NA NE NG NI NL NO NZ OM PA PE PG PH PL PT QA RO RS RU RW SA SC SD SE SG SI SK SL SM SN ST SV SY SZ TD TG TH TJ TM TN TR TT TZ UA UG US UZ VC VN ZA ZM ZW

7) Family number: 12734456 (US4929179A)

© PatBase

Title: ROOF STRUCTURE

Abstract: A roof structure has a plurality of layers of heat resistant material, at least a first of the layers including a first brick layer, at least a second of the layers above the first of the layers including a heat resistant compound, and the heat resistant compound being unshaped when initially installed above the first of the layers. A method of forming a roof structure in an opening between side walls of a chamber includes the steps of installing at least one layer of bricks in the opening directly above the chamber, applying at least one layer of a first concrete in an unshaped form in the opening over the at least one layer of the bricks, tamping the at least one layer of the first concrete at at least a first predetermined temperature, and allowing the at least one layer of the first concrete to harden.

Classifications:
International (IPC 8-9): C10B29/02 C10B29/04
C10B29/06 (Advanced/Invention);
C10B29/00 (Core/Invention)
International (IPC 1-7): C10B1/02 C10B17/00 C10B29/02 C10B29/04
C10B29/06 E04G23/00 F27D1/00
CPC: C10B29/02
European: C10B29/02
US: 110/331 432/247 432/250 432/251 432/252 52/741.41 52/746.11
52/747 52/748.1 527/470

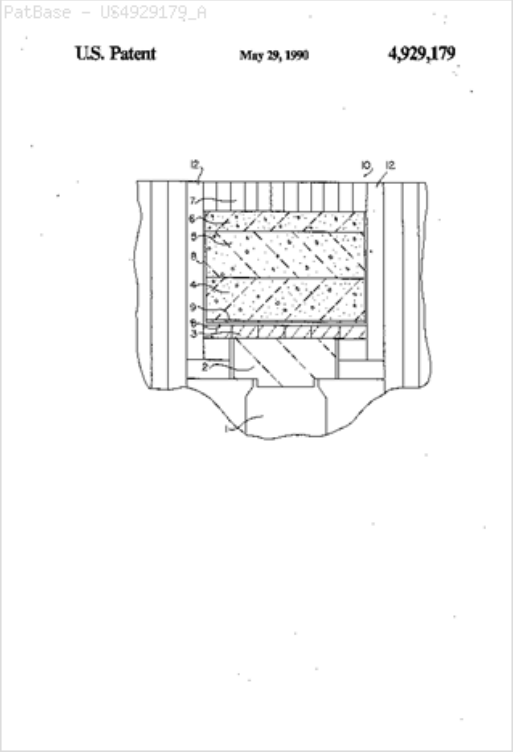

Family:

Publication number	Publication date	Application number	Application date
DE3816396 A1	19890302	DE19883816396	19880513
DE3816396 C2	19890810	DE19883816396	19880513
DE3863627 D1	19910814	DE19883863627	19880524
EP0316411 A1	19890524	EP19880904958	19880524
EP0316411 B1	19910710	EP19880904958	19880524
JP2504398 T2	19901213	JP19880504702T	19880524
JP7076339 B4	19950816	JP19880504702	19880524
US4929179 A	19900529	US19880258549	19881017
US5155966 A	19921020	US19900505017	19900404
WO8809361 A1	19881201	WO1988EP00461	19880524

Priority:

DE19873717015 19870521 DE19883816396 19880513 JP19880504702 19880524
DE19883863627 19880524 WO1988EP00461 19880524 US19880258549 19881017
US19900505017 19900404

Probable Assignee: RAG FOUNDATION

Assignee(s): (std)**:** RAG FOUNDATION ; RUHRKOHLE AG

Assignee(s): RUHRKOHLE AG 4300 ESSEN DE ; RUHRKOHLE AKTIENGESELLSCHAFT ; RUHRKOHLE 4300 ESSEN DE AG

Inventor(s): (std)**:** BREIDENBACH DIETER ; OLDENGOTT HANS ; VITT BURCKARD ; VITT BURCKHARD ; BREIDENBACH DIETER DR

Inventor(s): UITSUTO BURUKARUTO ; ORUDENGOTSUTO HANSU ; BURAIDENBATSUHA DEIITERU ; VITT BURCKARD W 5204 LOHMAR 1 DE ; OLDENGOTT HANS W 4700 HAMM 4 DE ; OLDENGOTT HANS 4700 HAMM DE ; BREIDENBACH DIETER W 4630 BOCHUM STIEPEL DE ; BREIDENBACH DIETER DR 4630 BOCHUM DE ; VITT BURCKHARD 5204 LOHMAR DE

Designated states: AT BE CH DE FR GB IT JP LU NL SE US

8) Family number: 17373461 (CN2064363U)

© PatBase

Title: COVER OF COKE-OVEN

Abstract: The utility model relates to a closure device for a coke-oven produced by fireproofing material, in particular to a cover of a coke-oven with opening and closing comprising a plurality of small separated arch covers movably connected with the sidewall of the oven body; each small separated arch cover pieces together to form a complete oven cover. The utility model has the advantages of convenient feeding and coke-discharging, short coking time, convenient tamping for coking coal, light environmental pollution, and complete avoidance of the collapse of the oven top for heat expansion and cold contraction.

Classifications:
International (IPC 8-9): C10B5/00 (Advanced/Invention);
C10B5/00 (Core/Invention)
International (IPC 1-7): C10B5/00

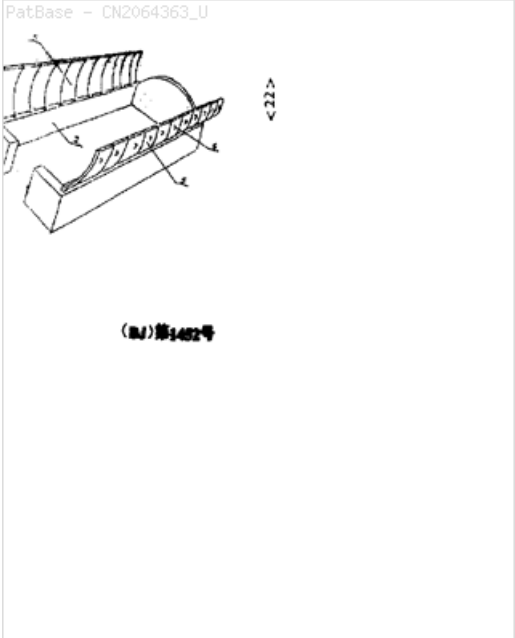

Family:

Publication number	Publication date	Application number	Application date
CN2064363 U	19901024	CN19892013639U	19890710

Priority:

CN19892013639U 19890710

Probable Assignee: JIEXIU COUNTY NO 2 MACHINERY F

Assignee(s): (std): JIEXIU COUNTY NO 2 MACHINERY F

Assignee(s): JIEXIU COUNTY NO 2 MACHINERY FACTORY

Inventor(s): (std): SONG BENZHI ; GUO CHUNDAI ; CHUNDAI GUO ; BENZHI SONG

9) Family number: 61914604 (US2017253803A) © PatBase

Title: COKE OVENS HAVING MONOLITH COMPONENT CONSTRUCTION

Abstract: The present technology is generally directed to horizontal heat recovery and non-heat recovery coke ovens having monolith components. In some embodiments, an HHR coke oven includes a monolith component that spans the width of the oven between opposing oven sidewalls. The monolith expands upon heating and contracts upon cooling as a single structure. In further embodiments, the monolith component comprises a thermally-volume-stable material. The monolith component may be a crown, a wall, a floor, a sole flue or combination of some or all of the oven components to create a monolith structure. In further embodiments, the component is formed as several monolith segments spanning between supports such as oven sidewalls. The monolith component and thermally-volume-stable features can be used in combination or alone. These designs can allow the oven to be turned down below traditionally feasible temperatures while maintaining the structural integrity of the oven.

Classifications:
International (IPC 8-9): C10B15/02 C10B29/02 C10B29/04 C10B5/06 (Advanced/Invention)
International (IPC 1-7): C10B15/02 C10B29/02
CPC: C10B29/04 C10B5/06 C10B15/02 C10B29/02

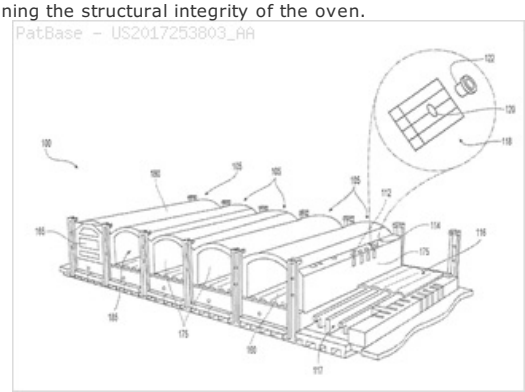

Family:

Publication number	Publication date	Application number	Application date
AU2015317909 AA	20170323	AU20150317909	20150915
BR112017004981 A2	20171205	BR20171104981	20150915
CA2961207 AA	20170313	CA20152961207	20150915
CN106687564 A	20170517	CN201580051361	20150915
CO20170003281 A2	20170831	CO20170003281	20170404
EP3194531 A1	20170726	EP20150842460	20150915
EP3194531 A4	20180620	EP20150842460	20150915

IN201737008983 A	20170818	IN201737008983	20170315
JP2017526798 T2	20170914	JP20170514488T	20150915
KR20170055507 A	20170519	KR20177009352	20150915
RU2017112974 A	20181017	RU20170112974	20150915
RU2017112974 A3	20190221	RU20170112974	20159115
RU2017112974 A3	20190221	RU20170112974	20150915
US2017253803 AA	20170907	US20150511036	20150915
WO16044347 A1	20160324	WO2015US50295	20150915

Priority:

US20140050738P 20140915 WO2015US50295 20150915 US20150511036 20150915
RU20170112974 20159115

Probable Assignee: SUNCOKE TECHNOLOGY AND DEVELOPMENT LLC

Assignee(s): (std): SUNCOKE TECH AND DEV LLC ; SUNCOKE TECHNOLOGY AND DEV LLC ; SUNCOKE TECH AND DEVELOPMENT LLC

Assignee(s): WEST GARY DEAN ; SUNCOKE TECHNOLOGY AND DEVELOPMENT LLC ; BANK OF AMERICA NA ADMINISTRATIVE AGENT AS ; QUANCI JOHN FRANCIS ; SANKOUK TEKNOLODZHI END DIVELOPMENT ELELSI

Inventor(s): (std): WEST GARY DEAN ; QUANCI JOHN FRANCIS ; JOHN FRANCIS QUANCI ; GARY DEAN WEST

Inventor(s): KUONSI DZHON FRENSIS ; UEST GERI DIN

Agent(s): SPRUSON AND FERGUSON; GOWLING WLG CANADA LLP; JOSE ANDRES RINCON USCATEGUI; BEATTIE ALEX THOMAS STEWART; TANI AND ABE PC; YURIDICHESKAYA GORODISSKIJ I PARTNERY OOO FA; BETCHER SUSAN D ET AL

Designated states: AE AG AL AM AO AT AU AZ BA BB BE BF BG BH BJ BN BR BW BY BZ CA CF CG CH CI CL CM CN CO CR CU CY CZ DE DK DM DO DZ EC EE EG ES FI FR GA GB GD GE GH GM GN GQ GR GT GW HN HR HU ID IE IL IN IR IS IT JP KE KG KM KN KP KR KZ LA LC LI LK LR LS LT LU LV LY MA MC MD ME MG MK ML MN MR MT MW MX MY MZ NA NE NG NI NL NO NZ OM PA PE PG PH PL PT QA RO RS RU RW SA SC SD SE SG SI SK SL SM SN ST SV SY SZ TD TG TH TJ TM TN TR TT TZ UA UG US UZ VC VN ZA ZM ZW

10) Family number: 1429701 (US4287024A)

© PatBase

Title: HIGH-SPEED SMOKELESS COKE OVEN BATTERY

Abstract: A plurality of sole flue-heated, non-recovery coke ovens constructed in side-by-side relation in a battery have their chimney uptake outlets connected to a common combustion tunnel extending longitudinally of and above the battery and connected to stacks at spaced intervals along its length. Each oven has a bypass flue directly connecting the top of its coking chamber to the combustion tunnel, and a normally closed valve in each bypass is operable to selectively connect the coking chamber to the tunnel to permit charging gases to be drawn from the chambers to be burned in the tunnel and stack. The bypass valve is closed during coking so that the partially burned gases from the crown of the coking chambers are led through downcomers in the oven walls to the sole flues where a controlled amount of combustion air can be admitted to promote the continued burning process and provide maximum heat in the sole flues. The gases then pass through the chimney uptakes to the tunnel where additional combustion air can be admitted to assure complete combustion in the tunnel and stack before being discharged to the atmosphere. Combustion air admitted into the sole flues can be preheated in pipes extending through the base slab beneath the sole flues where waste heat is extracted to protect the foundation of the ovens while increasing the temperature in the sole flues.

Classifications:
International (IPC 8-9): C10B15/02 C10B27/04 C10B27/06 C10B5/06 (Advanced/Invention);
C10B15/00 C10B27/00 C10B5/00 (Core/Invention)
International (IPC 1-7): C10B15/02 C10B27/04 C10B27/06 C10B5/06
CPC: C10B15/02 Y02P20/129
European: C10B15/02
US: 201/15 201/26 201/27 201/35 201/41 202/134 202/135 202/145 202/151 202/262 202/263

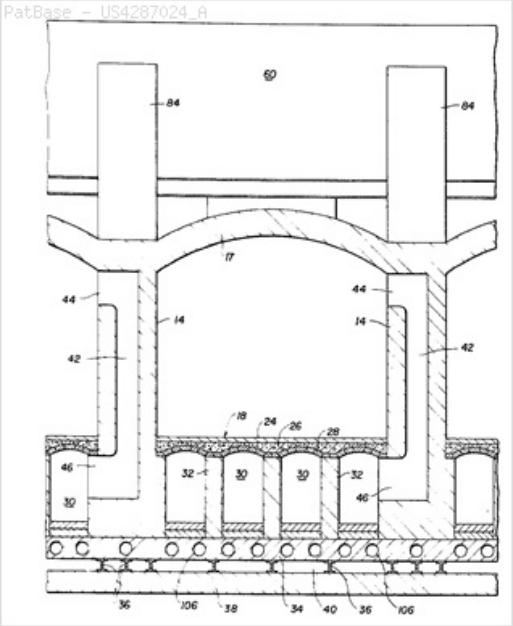

Family:

Publication number	Publication date	Application number	Application date
AU197947493 A1	19800103	AU19790047493	19790528
AU198178248 A1	19820325	AU19810078248	19811203
AU522099 B2	19820513	AU19790047493	19790528
BR7903854 A	19800325	BR19790003854	19790619

CA1139707 A1	19830118	CA19790328262	19790524
CA1139708 A1	19830118	CA19810384148	19810818
CA1139708 A2	19830118	CA19810384148	19810818
CA1139709 A1	19830118	CA19810384149	19810818
CA1139709 A2	19830118	CA19810384149	19810818
US4287024 A	19810901	US19780918054	19780622
US4344820 A	19820817	US19800218258	19801219

Priority:

US19780918054 19780622 CA19790328262 19790524 US19800918054 19800622
US19800218258 19801219 CA19810384148 19810818 CA19810384149 19810818
AU19810078248 19811203

Probable Assignee: ELK RIVER RESOURCES INC

Assignee(s): (std): ELK RIVER RESOURCES INC ; THOMPSON B ; THOMPSON B R ; THOMPSON BUSTER R

Assignee(s): THOMPSON BUSTER RAY ; THOMPSON BR

Inventor(s): (std): THOMPSON B ; THOMPSON BUSTER R ; THOMPSON BUSTER RAY

Inventor(s): BUSTER RAY THOMPSON

Agent(s): SPRUSON AND FERGUSON; ASPEN PHARMA PTY LTD; JOHNSON AND HICKS

11) Family number: 33701716 (US2009283395A)

© PatBase

Title: FLOOR CONSTRUCTION FOR HORIZONTAL COKE OVENS

Abstract: The invention relates to a coke oven of a non-recovery horizontal type of construction, known as a non-recovery or heat-recovery coke oven, in which the coke oven floor is made up of at least two layers and each layer is formed of the same or different silica materials, wherein the first layer, seen from the oven space, is formed from a solid refractory material and the second layer comprises a multiplicity of openings, gaps, apertures or the like, the gas spaces of these openings, gaps, apertures or the like being in communication with the gas space of the flue gas duct running under them.

Classifications:
International (IPC 8-9): C10B15/00 C10B15/02 C10B29/00 C10B29/02 C10B5/00 C10B5/02 C10B5/06 F27D1/00 F27D1/04 F27D1/06 (Advanced/Invention);
C10B5/00 F27D1/00 (Advanced/Non-invention);
C10B15/00 C10B29/00 C10B5/00 F27D1/00 F27D1/04 (Core/Invention);
C10B F27D (Subclass/Invention)
International (IPC 1-7): C10B29/2 C10B5/00
CPC: C10B29/02 C10B5/06 C10B15/02 C10B29/00 C10B5/00 F27D1/0043
European: C10B15/02 C10B29/02 C10B5/06
US: 1/1 201/41 202/145 202/267.1

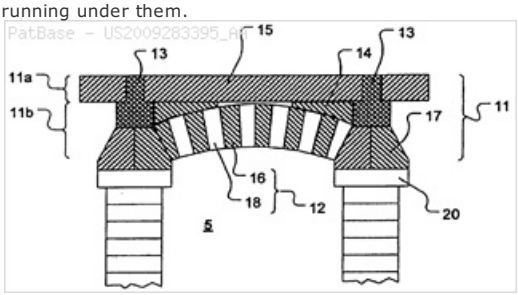

Family:

Publication number	Publication date	Application number	Application date
AR061231 AA	20080813	AR2007P102414	20070605
AT441697 E	20090915	AT20070725552T	20070525
AU2007256495 AA	20071213	AU20070256495	20070525
AU2007256495 BB	20111020	AU20070256495	20070525
BRPI0711959 A2	20111220	BR2007PI11959	20070525
CA2653512 AA	20081126	CA20072653512	20070525
CA2653512 C	20140429	CA20072653512	20070525
CL2007001626 A1	20080118	CL20070001626	20070606
CL49658 B	20131127	CL20070001626	20070606
CN101460592 A	20090617	CN200780020930	20070525
CN101460592 B	20130717	CN200780020930	20070525
DE102006026521 A1	20071213	DE200610026521	20060606
DE202006009985 U1	20061012	DE200620009985U	20060606
DE502007001456 D1	20091015	DE200750001456T	20070525
EP2032673 A1	20090311	EP20070725552	20070525
EP2032673 B1	20090902	EP20070725552	20070525
ES2330975 T3	20091217	ES20070725552T	20070525
IN06693CN2008 A	20090327	IN2008CN06693	20081205
IN276331 B	20161021	IN2008CN06693	20081205
JP2009540024 T2	20091119	JP20090513571T	20070525
JP5274452 B2	20130828	JP20090513571T	20070525
KR101476454 B1	20141224	KR20087029393	20070525
KR20090015104 A	20090211	KR20087029393	20081201
MX2008015739 A1	20081219	MX20080015739	20070525
NO20085125 A	20090302	NO20080005125	20081209
PT2032673 T	20091113	PT20070725552T	20070525
RU2008152773 A	20100720	RU20080152773	20070525
RU2441898 C2	20120210	RU20080152773	20070525
TW200823283 A	20080601	TW20070119060	20070529
UA94106 C2	20110411	UA20090000116	20070525
US2009283395 AA	20091119	US20070227999	20070525
US9115313 BB	20150825	US20070227999	20070525

WO07140891 A1	20071213	WO2007EP04656	20070525
ZA200810267 A	20090826	ZA20080010267	20081203

Priority:

DE200610026521 20060606 DE200620009985U 20060606 WO2007EP04656 20070525

Probable Assignee: THYSSENKRUPP INDUSTRIAL SOLUTIONS AG

Assignee(s): (std): HIPPE WERNER ; THYSSENKRUPP UHDE GMBH ; UDE GMBKH ; UHDE GMBH

Assignee(s): THYSSENKRUPP INDUSTRIAL SOLUTIONS AG

Inventor(s): (std): HIPPE WERNER ; KHIPPE VERNER ; WERNER HIPPE

Agent(s): DAVIES COLLISON CAVE; DAVIES COLLISON CAVE PTY LTD; FETHERSTONHAUGH AND CO; ALESSANDRI; MARSHALL AND MELHORN LLC

Designated states: AE AG AL AM AT AU AZ BA BB BE BF BG BH BJ BR BW BY BZ CA CF CG CH CI CM CN CO CR CU CY CZ DE DK DM DZ EC EE EG ES FI FR GA GB GD GE GH GM GN GQ GR GT GW HN HR HU ID IE IL IN IS IT JP KE KG KM KN KP KR KZ LA LC LI LK LR LS LT LU LV LY MA MC MD MG MK ML MN MR MT MW MX MY MZ NA NE NG NI NL NO NZ OM PG PH PL PT RO RS RU SC SD SE SG SI SK SL SM SN SV SY SZ TD TG TJ TM TN TR TT TZ UA UG US UZ VC VN ZA ZM ZW

12) Family number: 66712895 (US2017240451A)

© PatBase

Title: GLASS FURNACE REGENERATORS FORMED OF ONE-PIECE LOAD-BEARING WALL BLOCKS

Abstract: Glass furnace regenerators having opposed pairs of side and end walls formed of refractory blocks, wherein at last one of the side and end walls of the regenerator comprise an interlocking plurality of refractory blocks, and wherein the refractory blocks are self-supporting and load-bearing one-piece pre-cast structures of a refractory material. Tie back bars may be provided to operatively connect a wall formed of the refractory blocks to externally provided buckstays to allow relative movement between the refractor blocks forming the wall and the buckstays (e.g., as may be required due to the blocks undergoing thermal expansion during use).

Classifications:
International (IPC 8-9): C03B5/237 F27D1/04
F27D1/08 (Advanced/Invention)
International (IPC 1-7): C03B5/237 F27D1/04 F27D1/08
CPC: F27D1/042 F27D1/08 C03B5/2375 Y02P40/535

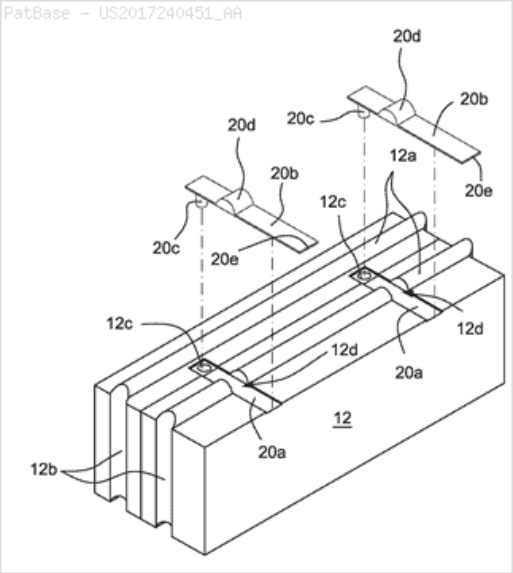

Family:

Publication number	Publication date	Application number	Application date
AU2017221255 AA	20180809	AU20170221255	20170214
BR112018015773 A2	20190108	BR20181115773	20170214
CN108698874 A	20181023	CN201780011572	20170214
EP3416920 A1	20181226	EP20170706949	20170214
IN201817029949 A	20181116	IN201817029949	20180809
JP2019505473 T2	20190228	JP20180544078T	20170214
KR20180118685 A	20181031	KR20187026993	20170214
US2017240451 AA	20170824	US20170432084	20170214
WO17142858 A1	20170824	WO2017US17769	20170214

Priority:

US20160296858P 20160218 US20170432084 20170214 WO2017US17769 20170214

Probable Assignee: FOSBEL INC

Assignee(s): (std): DSF REFRACTORIES AND MINERALS LTD ; FOSBEL INC

Inventor(s): (std): ALAN BOWSER ; BOWSER ALAN ; CAROLLA LOU ; WILSON TREVOR ROBERT ; TREVOR ROBERT WILSON ; LOU CAROLLA

Agent(s): SPRUSON AND FERGUSON; CULLEN GAVIN JAMES; DAVIDSON BRYAN H

Designated states: AE AG AL AM AO AT AU AZ BA BB BE BF BG BH BJ BN BR BW BY BZ CA CF CG CH CI CL CM CN CO CR CU CY CZ DE DJ DK DM DO DZ EC EE EG ES FI FR GA GB GD GE GH GM GN GQ GR GT GW HN HR HU ID IE IL IN IR IS IT JP KE KG KH KM KN KP KR KW KZ LA LC LI LK LR LS LT LU LV LY MA MC MD ME MG MK ML MN MR MT MW MX MY MZ NA NE NG NI NL NO NZ OM PA PE PG PH PL PT QA RO RS RU RW SA SC SD SE SG SI SK SL SM SN ST SV SY SZ TD TG TH TJ TM TN TR TT TZ UA UG US UZ VC VN ZA ZM ZW

13) Family number: 41614974 (US2008169578A)

© PatBase

Title: COKE OVEN RECONSTRUCTION

Abstract: A new, faster and more efficient process to replace heating walls and ceilings in coke oven batteries. Thus, when replaced, at least one heating wall is constructed of thermally stable non-expanding large size modular cast modules from end to end and the ceiling adjacent the heating wall is constructed of thermally stable non-expanding large modular cast blocks.

Classifications:
International (IPC 8-9): B23P6/00 C10B29/00 C10B29/02 C10B29/04 C10B29/06 F27D1/16 (Advanced/Invention);
C10B29/00 F27D1/16 (Core/Invention);
C01B (Subclass/Invention)
International (IPC 1-7): C10B29/00 C10B29/02 C10B29/06
CPC: Y10T29/49352 Y10T29/49732 Y10T29/49734 C10B29/02 C10B29/06 F27D1/04 F27D1/1621
European: C10B29/02 C10B29/06 F27D1/04 F27D1/16B
US: 110/314 110/336 110/336S 110/337 110/341 264/30 264/30P 29/402.09 29/402.11 29/890.031 52/302.4 52/606

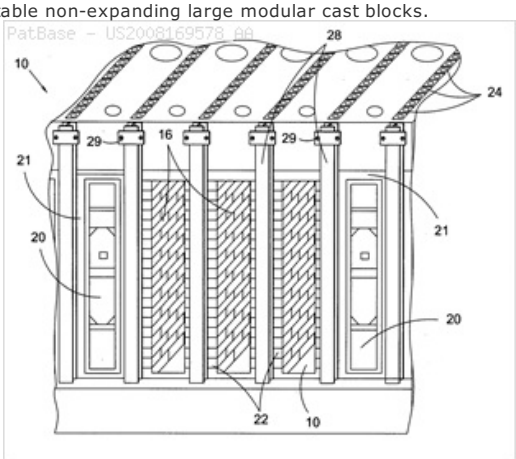

Family:

Publication number	Publication date	Application number	Application date
AU2008200149 AA	20080731	AU20080200149	20080111
AU2008200149 AI	20080807	AU20080200149	20080111
AU2008200149 BB	20130711	AU20080200149	20080111
BRPI0800164 A	20080902	BR2008PI00164	20080116
BRPI0800164 B1	20181121	BR2008PI00164	20080116
CA2617358 AA	20080716	CA20082617358	20080109
CA2617358 C	20150317	CA20082617358	20080109
CN101225312 A	20080723	CN200810003323	20080116
DE102008004738 A1	20090219	DE200810004738	20080116
DE102008004738 B4	20141224	DE200810004738	20080116
GB200800676 A0	20080220	GB20080000676	20080115
GB2445855 A1	20080723	GB20080000676	20080115
GB2445855 B2	20110601	GB20080000676	20080115
IN02703DE2007 A	20080905	IN2007DE02703	20071224
NL2001175 A1	20080717	NL20082001175	20080109
NL2001175 C2	20091020	NL20082001175	20080109
NL2003617 A1	20091118	NL20092003617	20091009
NL2003617 C	20100322	NL20092003617	20091009
NL2003618 A1	20091127	NL20092003618	20091009
NL2003618 C	20100322	NL20092003618	20091009
RO125227 A2	20100226	RO20080000040	20080115
RO125227 B1	20120130	RO20080000040	20080115
RU2008100603 A	20090727	RU20080100603	20080116
RU2489470 C2	20130810	RU20080100603	20080116
UA95242 C2	20110725	UA20080000557	20080116
US2008169578 AA	20080717	US20070653695	20070116
US7827689 BB	20101109	US20070653695	20070116
ZA200800478 A	20091028	ZA20080000478	20080116

Priority:

US20070653695 20070116 CA20082617358 20080109 NL20082001175 20080109
NL20092003617 20091009 NL20092003618 20091009

Probable Assignee: VANCOUVER REFRACTORIES LLC

Assignee(s): (std): VANOCUR REFRACTORIES L L C ; VANOCUR REFRACTORIES L L C A L ; VEHNEHKEH REFRAKTORIZ EHL EHL SI

Assignee(s): VEHNEHKEH REFRAKTORIZ EHLEHLSI ; VANOCUR REFRACTORIES LLC A LIABILITY OF DELAWARE CORP LTD ; VANOCUR REFRACTORIES LL C ; VANOCUR REFRACTORIES LLC ; VANOCUR REFRACTORIES L L C A LIMITED LIABILITYCORPORATION OF DELAWARE ; BLOOM ROBERT A ; CRANE JAMES D ; VANCOUVER REFRACTORIES LLC ; VANOCUR REFRACTORIES

Inventor(s): (std): BLOOM ROBERT A ; BLUM ROBERT A ; CRANE JAMES D ; JAMES D CRANE ; KREJN DZHEJMS D ; ROBERT A BLOOM

Agent(s): GRIFFITH HACK; MACRAE AND CO; SANDRA J THOMPSON; HARTER SECREST AND EMERY LLP; STEPHEN B; MICHAEL J

14) Family number: 28276975 (US2002134659A) © PatBase

Title: Coke oven flue gas sharing

Abstract: The invention provides a method and apparatus for decreasing gas flow rates in a sole flue gas system for a coke oven during at least an initial coking operation after charging a coking oven with coal. The method includes providing a duct system between a first coke oven having a first coking chamber and a second coke oven having a second coking chamber to direct at least a portion of gas from a gas space in first coking chamber to the second coke oven thereby reducing a gas flow rate in the first sole flue gas system of the first coke oven. Reduction in sole flue gas flow rates has a beneficial effect on product throughput, the life of the coke oven and environmental control of volatile emissions from coke ovens.

Classifications:
International (IPC 8-9): C10B1/06 C10B15/00 C10B15/02 C10B21/20 C10B23/00 C10B47/00 C10B47/10 C10B5/00 C10B5/02 C10B5/04 C10B5/08 C10B5/10 C10B51/00 C10B9/00 F23J11/00 F23J11/02 F23J11/12 (Advanced/Invention);
C10B47/10 (Advanced/Non-invention);
C10B1/00 C10B15/00 C10B21/00 C10B23/00 C10B47/00 C10B5/00 C10B9/00 F23J11/00 (Core/Invention)
International (IPC 1-7): C10B1/06 C10B15/00 C10B23/00 C10B47/00 C10B47/10 C10B5/00 C10B5/02 C10B5/04 C10B5/06 C10B5/08 C10B5/10 C10B51/00 F23J F23J11/00 F23J11/12
CPC: C10B9/00 C10B15/02 C10B21/20 F23J11/02 F23J11/12
European: C10B15/02 C10B21/20 C10B9/00 F23J11/02 F23J11/12
US: 201/13 201/14 201/15 201/26 201/27 202/108 202/113 202/133 202/135 202/138 202/139 202/145 202/151 202/220 202/254 202/262 202/263 202/96 202/99

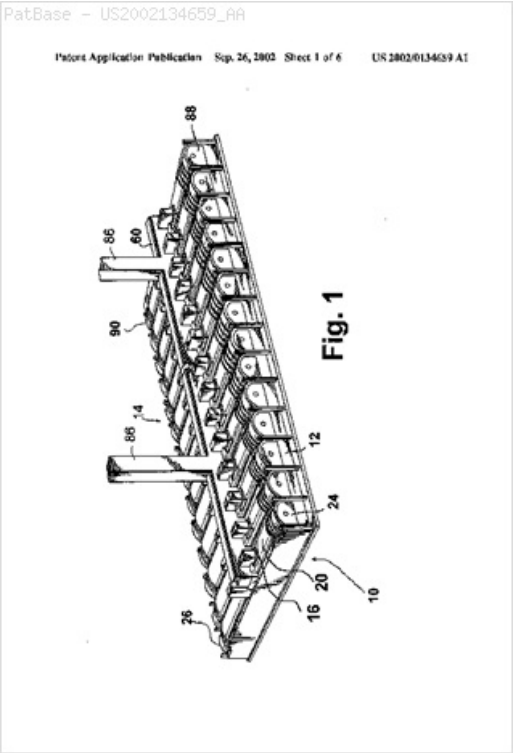

Family:

Publication number	Publication date	Application number	Application date
AU2002239860 AA	20020828	AU20020239860	20020111
AU2002239860 BB	20051215	AU20020239860	20020111
BRPI0207428 A	20040810	BR2002PI07428	20020111
BRPI0207428 B1	20130430	BR2002PI07428	20020111
CA2438132 AA	20030812	CA20022438132	20020111
CA2438132 C	20080617	CA20022438132	20020111
CN100510004 C	20090708	CN20028008224	20020111
CN1527872 A	20040908	CN20028008224	20020111
DE60245650 D1	20131212	DE20026045650	20020111
EP1427794 A2	20040616	EP20020705729	20020111
EP1427794 A4	20100317	EP20020705729	20020111
EP1427794 B1	20131016	EP20020705729	20020111
IN01309DN2003 A	20050527	IN2003DN01309	20030818
IN234205 B	20090605	IN2003DN01309	20030818
JP2005503448 T2	20050203	JP20020564298T	20020111
JP4143410 B2	20080903	JP20020564298T	20020111
KR100724182 B1	20070531	KR20037010709	20020111
KR20040020883 A	20040309	KR20037010709	20020111
PL201610 B1	20090430	PL20020368842	20020111
PL368842 A1	20050404	PL20020368842	20020111
US2002134659 AA	20020926	US20010783195	20010214
US6596128 BB	20030722	US20010783195	20010214
WO02065018 A2	20020822	WO2002US00688	20020111
WO02065018 A3	20040408	WO2002US00688	20020111

Priority:

US20010783195 20010214 EP20020705729 20020111 WO2002US00688 20020111 WO2002US00688 20030814

Probable Assignee: SUNCOKE TECHNOLOGY AND DEVELOPMENT LLC

Assignee(s): (std): SUN COKE CO ; WESTBROOK RICHARD W ; SUNCOKE TECHNOLOGY AND DEV LLC

Assignee(s): SUNCOKE TECHNOLOGY AND DEVELOPMENT LLC KNOXVILLE ; SUNCOKE TECHNOLOGY AND DEVELOPMENT CORP ; SUNCOKE TECHNOLOGY AND DEVELOPMENT LLC ; SUNCOKE ENERGY INC ; BANK OF AMERICA NA ADMINISTRATIVE AGENT AS ; BANK OF AMERICA NA SUCCESSOR AGENT AS ; JPMORGAN CHASE BANK NA

Inventor(s): (std): WESTBROOK R W ; WESTBROOK RICHARD W

Inventor(s):	RICHARD W WESTBROOK ; WESTBROOK RICHARD W CONCORD ; R W WESTBROOK ; RW WESTBROOK
Agent(s):	SPRUSON AND FERGUSON; PERLEY ROBERTSON HILL AND MCDOUGALL LLP; WEICKMANN AND WEICKMANN PATENTANWAELTE RECHTSANWALT PARTMBB; PLUCKROSE ANTHONY WILLIAM
Designated states:	AE AG AL AM AT AU AZ BA BB BE BF BG BJ BR BY BZ CA CF CG CH CI CM CN CO CR CU CY CZ DE DK DM DZ EC EE ES FI FR GA GB GD GE GH GM GN GQ GR GW HR HU ID IE IL IN IS IT JP KE KG KP KR KZ LC LI LK LR LS LT LU LV MA MC MD MG MK ML MN MR MW MX MZ NE NL NO NZ PL PT RO RU SD SE SG SI SK SL SN SZ TD TG TJ TM TR TT TZ UA UG UZ VN YU ZA ZM ZW