PatBase - Search results 16 April 2019
Search query (3): FT=((CERAMIC* AND (GRINDING OR MILLING OR GRIST OR POUNDING) AND (CRUSHING OR SHATTERING) AND (SIFTING OR SIEVE) AND (LAMINATING OR ROLLING))) and PD<20171201 and CPC=(B28B)
Results: 24

Search history

Search 1: [SP]: A machine to grind, crush, sift, and laminate materials used in the ceramics, pottery and artisanal industry that includes: a A housing b) One or more feed nozzles attached to the housing; c) A main axis; d) One or more blades carrying blades, with one or more blades, supported on the main shaft inside the casing; e) One or more hammers placed radially to the main shaft inside the housing f) A train of two or more rolling mills supported on shafts. (Results 0)

Search 2: [SP]: A machine to grind, crush, sift, and laminate materials used in the ceramics, pottery and artisanal industry that includes: a) A housing (1); b) One or more feed nozzles attached to the housing (1); c) A main axis (10); d) One or more blades (11) carrying blades (12), with one or more blades, supported on the main shaft (10) inside the casing (1); e) One or more hammers (13) placed radially to the main shaft (10) inside the housing (1); Y f) A train of two or more rolling mills supported on shafts. (Results 0)

Search 3: FT=((CERAMIC* AND (GRINDING OR MILLING OR GRIST OR POUNDING) AND (CRUSHING OR SHATTERING) AND (SIFTING OR SIEVE) AND (LAMINATING OR ROLLING))) and PD<20171201 and CPC=(B28B) (Results 24)

1) Family number: 21713045 (US2676892A)

© PatBase

Title: METHOD FOR MAKING UNICELLULAR SPHERULIZED CLAY PARTICLES AND ARTICLES AND COMPOSITION THEREOF

Priority: US19530391889 19531113

Family:

Publication number	Publication date	Application number	Application date
US2676892 A	19540427	US19530391889	19531113

Probable Assignee: KANIUM CORP

Assignee(s):(std)**:** KANIUM CORP

Inventor(s):(std)**:** MCLAUGHLIN JEROME D

International class (IPC 8-9): B28B1/00 (Advanced/Invention); B28B1/00 (Core/Invention)

CPC: Y10S264/63 Y10S425/101 Y10S521/921 B28B1/004

European class: B28B1/00C

US class: 106/409 106/681 106/718 106/793 252/378R 252/62 264/43 264/DIG.63 423/133 423/328.2 425/DIG.101 432/13 432/18 501/85 521/921 65/142 65/21.4

Classification Explorer

Cited documents: US868762 A, US2542992 A, US2517993 A, US2340194 A, US2136096 A, US1682675 A, GB117504 A,

Forward Citations: WO12033412, USRE35709, US9279255, US9006302, US8993462, US8609244, US8603239, US8291727, US8209927, US8182606, US7998571, US7993570, US7897534, US7878026, US7744689, US7727329, US7666807, US7666505, US7658794, US7651563, US7455798, US6254981, US6045913, US6027799, US5883029, US5665785, US5611833, US5518512, US5496387, US5470368, US5342419, US5253991, US5108461, US5100451, US4602962, US4512736, US4448599, US4311541, US4179264, US4025689, US4017290, US3854267, US3673290, US3516959, US3436790, US3433859, US3409450, US3340567, US3290723, US3231030, US3230184, US3197810, US3183107, US3174561, US3161468, US3151965, US3100715, US3085022, US3056184, US3046607, US3042535, US3041159, US3030215, US3021195, US3015852, US3015604, US3010177, US2978340, US2978339, US2946112, US2929106, US2899715, US2855191, US2850687, US2806509, US2766800, US2014260078, US2011138859, US2010144562, US2009200512, US2009156385, US2009146108, US2008096018, US2007275335, US2006240967, US2006122049, US2006060820, US2006059953, US2004262801, US2004081827, US2004080063, US2004079260, US10213293, EP1549427, DE3540068,

Abstract:
(Claim 1) ing and expanding clay particles by the method deflyied in claim 18.

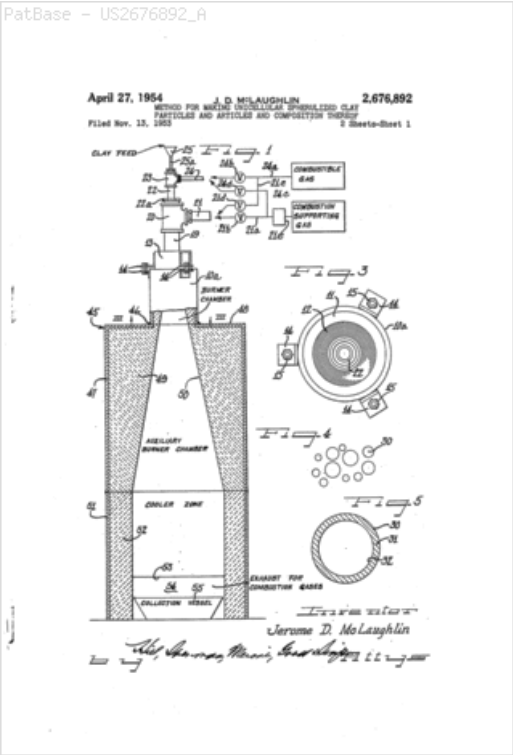

2) Family number: 33376236 (US5660900A) © PatBase

Title: INORGANICALLY FILLED, STARCH-BOUND COMPOSITIONS FOR MANUFACTURING CONTAINERS AND OTHER ARTICLES HAVING A THERMODYNAMICALLY CONTROLLED CELLULAR MATRIX

Priority: US19920929898 19920811 US19920982383 19921125 US19930095662 19930721 US19930109100 19930818 US19940218971 19940325 US19940288664 19940809 US19940288667 19940809

Family:

Publication number	Publication date	Application number	Application date
US5660900 A	19970826	US19940288664	19940809
US5783126 A	19980721	US19940288667	19940809

Probable Assignee: EARTHSHELL SPE LLC

Assignee(s):(std)**:** KHASHOGGI E IND

Assignee(s): E KHASHOGGI IND ; E KHASHOGGI IND LLC ; E KHASHOGGI INDUSTRIES ; EARTHSHELL SPE LLC

Inventor(s):(std)**:** ANDERSEN PER JUST ; HODSON SIMON K

International class (IPC 8-9): A61K47/36 B01F3/12 B27N3/00 B28B1/00 B28B1/52 B28B11/00 B28B11/24 B28B13/02 B28B13/06 B28B23/00 B28B3/00 B28B3/02 B28B3/12 B28B3/20 B28B3/26 B28B7/42 B28C7/02 B29B9/12 B29C31/04 B29C33/02 B29C33/10 B29C33/36 B29C33/58 B29C39/00 B29C39/42 B29C43/00 B29C43/02 B29C43/06 B29C43/08 B29C43/22 B29C43/24 B29C43/34 B29C43/36 B29C43/38 B29C43/46 B29C44/04 B29C45/00 B29C49/00 B29C51/00 B29C51/04 B29C51/10 B29C53/06 B29C55/18 B29C67/20 B29C67/24 B29C70/02 B29C70/12 B29C70/50 B29C71/00 B31B17/00 B32B13/02 B32B27/04 B32B27/20 B32B37/14 B32B5/02 B32B5/14 B32B5/18 B65D1/00 B65D43/16 B65D5/00 B65D65/38 B65D65/40 B65D65/46 C04B14/06 C04B14/38 C04B16/02 C04B20/00 C04B22/00 C04B22/04 C04B24/00 C04B24/14 C04B24/38 C04B26/00 C04B26/02 C04B26/28 C04B28/00 C04B28/02 C04B32/00 C04B38/00 C04B40/00 C04B40/06 C04B41/45 C04B41/61 C04B7/36 C04B7/52 C08J3/20 C08J9/00 C08J9/12 C08K7/02 C08L1/28 C08L101/00 C08L29/04 C08L3/00 C08L3/02 C08L31/04 C08L33/02 C08L5/02 C08L5/12 C08L5/14 C08L61/28 C08L89/06 C08L97/02 E05D1/02 (Advanced/Invention);
B05B11/00 B05C1/08 B05C3/18 B05C5/02 B29C53/58 B32B37/12 (Advanced/Non-invention)

International class (IPC 1-7): B29C59/00 B32B5/14 B32B7/02 C04B31/00

CPC: Y10S428/913 B01F3/1214 B01F2003/125 B05B11/0037 B05B11/30 B05C1/0826 B05C1/0834 B05C3/18 B05C5/0245 B27N3/002 B27N3/007 B28B1/00 B28B1/52 B28B3/00 B28B3/02 B28B3/126 B28B3/20 B28B3/2645 B28B7/42 B28B11/00 B28B11/003 B28B11/008 B28B11/24 B28B11/245 B28B13/021 B28B13/06 B28B23/00 B28B23/0081 B28B23/0087 B28C7/02 B29C33/10 B29C33/20 B29C33/36 B29C39/003 B29C39/42 B29C43/00 B29C43/003 B29C43/02 B29C43/06 B29C43/08 B29C43/34 B29C43/36 B29C43/38 B29C44/0407 B29C45/0013 B29C49/0005 B29C51/002 B29C51/04 B29C51/10 B29C53/063 B29C53/58 B29C55/18 B29C67/202 B29C67/24 B29C67/242 B29C70/025 B29C70/12 B29C70/50 B29C71/0009 B29C2043/3433 B29C2043/3615 B29C2043/3621 B29C2043/3623 B29C2043/3689 B29C2043/5841 B29C2049/4608 B29C2795/007 B29K2003/00 B29K2005/00 B29K2089/00 B29K2093/00 B29K2105/12 B29K2105/16 B29L2024/00 B29L2031/608 B29L2031/712 B29L2031/7132 B31D1/005 B32B5/02 B32B13/02 B32B27/04 B32B27/20 B32B37/12 B32B37/144 B65D5/00 B65D11/02 B65D43/162 B65D65/38 B65D65/466 B65D2301/20 B65D2565/385 C04B7/527 C04B14/064 C04B16/02 C04B20/002 C04B20/0048 C04B22/002 C04B22/04 C04B24/00 C04B24/14 C04B24/38 C04B26/00 C04B26/02 C04B26/026 C04B26/28 C04B26/285 C04B28/00 C04B28/02 C04B38/0006 C04B40/00 C04B40/0032 C04B40/006 C04B40/0616 C04B41/45 C04B41/61 C08J9/12 C08J2303/00 C08L1/28 C08L1/286 C08L3/00 C08L3/02 C08L5/02 C08L5/12 C08L5/14 C08L89/06 C08L97/02 E05D1/02 E05Y2900/602 Y10T428/1348 Y10T428/1372 Y10T428/1376 Y10T428/24992 Y10T428/249961 Y10T428/249983 Y10T428/249986 Y10T428/249989 Y10T428/24999 Y10T428/249991 Y10T428/249992 Y02W30/97 Y02W90/11 B29C44/3402 B31B50/32 B31B2105/0022 B32B1/02 B32B2262/062 B32B2305/08 B32B2305/30 B32B2305/70 B32B2307/7246 B32B2317/20 B32B2439/70 B32B5/18 B32B5/14 C08J9/0085 Y02A40/961 B29C48/0011 B29C48/0017 B29C48/03 B29C48/15

European class: B01F3/12B2 B27N3/00B B27N3/00R B28B1/00 B28B1/52 B28B11/00 B28B11/00E B28B11/00E3

B28B11/24 B28B11/24D B28B13/02C B28B13/06 B28B23/00 B28B23/00Z B28B23/00Z1 B28B3/00 B28B3/02 B28B3/12C B28B3/20 B28B3/26E B28B7/42 B28C7/02 B29C33/36 B29C39/00B B29C39/42 B29C43/00B B29C43/02 B29C43/06 B29C43/08 B29C43/34 B29C43/36 B29C43/38 B29C44/04A B29C45/00E B29C49/00B B29C51/00B B29C51/04 B29C51/10 B29C53/06B B29C55/18 B29C67/20C B29C67/22D1 B29C67/24 B29C67/24C B29C70/02A4 B29C70/12 B29C70/50 B29C71/00C B31B1/32 B31B17/00 B31D1/00H1 B32B13/02 B32B27/04 B32B27/20 B32B37/14B B32B5/02 B32B5/14 B32B5/18 B65D11/02 B65D43/16B B65D5/00 B65D65/38 B65D65/46C C04B14/06G C04B16/02 C04B20/00D2 C04B20/00F C04B22/00H C04B22/04 C04B24/00 C04B24/14 C04B24/38 C04B26/00 C04B26/02 C04B26/02B C04B26/28 C04B26/28B C04B28/00 C04B28/02 C04B38/00B C04B40/00 C04B40/00D1 C04B40/00D7 C04B40/06A2 C04B41/45 C04B41/61 C04B7/52H C08J9/00N C08J9/12 C08L1/28 C08L1/28F C08L3/00 C08L3/02 C08L5/02 C08L5/12 C08L5/14 C08L89/06 C08L97/02 E05D1/02 L01F3/12G L05B11/00B5 L05B11/30 L05C1/08P L05C1/08P2 L05C3/18 L05C5/02E L29C33/10 L29C33/20 L29C43/00 L29C43/06 L29C43/08 L29C43/34B L29C43/36C2 L29C43/36C2B L29C43/36C2B1 L29C43/36H2 L29C43/58D1 L29C47/00L4 L29C47/00L7 L29C47/02 L29C49/46B1A L29C53/58 L29C795/00D L29K105/12 L29K105/16 L29K3/00 L29K5/00 L29K89/00 L29K93/00 L29L24/00 L29L31/60C L29L31/712 L29L31/7132 L31B201/26A1A L31B217/08A L32B31/00A8B L32B37/12 L65D301/20 L65D565/38Y7 M08J303/00 P05D1/02 P05Y900/602

US class: 264/102 264/129 264/132 264/232 264/319 264/327 264/45.3 428/218 428/310.5 428/317.9 428/318.8 428/35.6 428/36.4 428/36.5 521/68 521/84.1 524/442 524/445 524/449 524/493

Classification Explorer

Cited documents: US5620510, US5512378, US5512090, US5506277, US5500089, US5411639, US5372877, US5367320, US5362777, US5362776, US5360586, US5346541, US5320669, US5317119, US5317037, US5314754, US5308879, US5300333, US5298273, US5296180, US5290350, US5288765, US5288318, US5284672, US5279658, US5278194, US5277764, US5275774, US5273821, US5273167, US5272181, US5269845, US5268187, US5266368, US5264080, US5264030, US5262458, US5258430, US5256711, US5253743, US5252271, US5248702, US5240561, US5224595, US5221435, US5208267, US5206087, US5201403, US5194206, US5187125, US5186990, US5185382, US5178730, US5178677, US5162126, US5160676, US5160368, US5156718, US5153037, US5141797, US5134179, US5132155, US5126014, US5126013, US5122231, US5110413, US5108677, US5106880, US5104669, US5104487, US5103717, US5095054, US5082500, US5076985, US5071512 A, US5061346 A, US5048403 A, US5043196 A, US5039378 A, US5039003 A, US5035930 A, US5032414 A, US5032413 A, US4979992 A, US4963603 A, US4957754 A, US4957558 A, US4953453 A, US4952278 A, US4944595 A, US4943349 A, US4941922 A, US4927656 A, US4927655 A, US4925530 A, US4923665 A, US4921250 A, US4919758 A, US4912069 A, US4892590 A, US4889428 A, US4872913 A, US4863655 A, US4846932 A, US4833191 A, US4828650 A, US4814012 A, US4789244 A, US4775580 A, US4755494 A, US4753710 A, US4749583 A, US4711669 A, US4710422 A, US4710117 A, US4694741 A, US4673438 A, US4669603 A, US4652218 A, US4648314 A, US4625856 A, US4624855 A, US4623150 A, US4613627 A, US4602590 A, US4595623 A, US4588443 A, US4567049 A, US4562218 A, US4552463 A, US4550655 A, US4545854 A, US4529663 A, US4529662 A, US4529653 A, US4524682 A, US4508595 A, US4462835 A, US4454268 A, US4445970 A, US4438685 A, US4410571 A, US4394930 A, US4378271 A, US4377440 A, US4329177 A, US4328136 A, US4306059 A, US4303690 A, US4249991 A, US4243480 A, US4230502 A, US4225383 A, US4225247 A, US4210490 A, US4204337 A, US4172154 A, US4149550 A, US4124550 A, US4094077 A, US4089691 A, US4080213 A, US4070196 A, US4044166 A, US4043862 A, US4017324 A, US3968004 A, US3962155 A, US3914359 A, US3759729 A, US3493382 A, US3117014 A, US3052595 A, US3042578 A, US2968561 A, US2432971 A,

Forward Citations: WO9944806, WO03078267, WO0246058, USRE39339, US9890083, US9840066, US9802866, US9701583, US9475732, US9410361, US9375899, US9282769, US9243444, US9174370, US9173418, US9080372, US9027296, US8927622, US8915033, US8906437, US8881494, US8658714, US8608018, US8604123, US8574624, US8541074, US8528734, US8506862, US8501260, US8470461, US8382888, US8277718, US8268417, US8257489, US8197952, US8167999, US8157908, US8152510, US8087921, US8043539, US7981338, US7968626, US7967904, US7905951, US7868057, US7795349, US7655266, US7569273, US7553363, US7550518, US7481645, US7370827, US7332537, US7282273, US7235256, US7135063, US7083673, US7048226, US7008204, US6878199, US6830444, US6805823, US6610429, US6599451, US6533973, US6494704, US6468462, US6455083, US6416850, US6347934, US6184272, US6184272, US6183672, US6176915, US6103151, US6030673, US5922379, US2015040349, US2013216660, US2011210164, US2010280149, US2010233396, US2009258172, US2009238912, US2009218347, US2009104314, US2009098303, US2009076190, US2009012210, US2008217464, US2008138458, US2008138402, US2008069846, US2008003384, US2007202228, US2007148384, US2007106420, US2007092718, US2007092712, US2007079945, US2007004827, US2006255507, US2006110498, US2006057265, US2006038324, US2005230864, US2005147695, US2005145749, US2005139722, US2005120915, US2005089606, US2004265453, US2004177580, US2004177579, US2003216492, US2003215640, US2003211187, US2003155675, US10240089, US10196309, US10077597, US10016739, EP2559541, EP2559541, EP1265957, DE102016113423, CN102971128,

Abstract:
Compositions, methods, and systems for manufacturing articles, particularly containers and packaging materials, having a particle packed, highly inorganically filled, cellular matrix are disclosed. Suitable inorganically filled mixtures are prepared by mixing together a starch-based binder, a solvent, inorganic aggregates, and optimal admixtures, e.g., fibers, mold-releasing agents, rheology-modifying agents, plasticizers, coating materials, and dispersants, in the correct proportions to form an article which has the desired performance criteria. The inorganically filled mixtures have a predetermined viscosity and are heated between molds at an elevated temperature and pressure to produce form-stable articles having a desired shape and a selectively controlled cellular, structure matrix. The molded articles may be placed in a high humidity chamber to obtain the necessary flexibility for their intended use. The articles may be manufactured to have properties substantially similar to articles presently made from conventional materials like paper, paperboard, polystyrene, plastic, or other organic materials. They have especial utility in the mass-production of containers, particularly food and beverage containers.

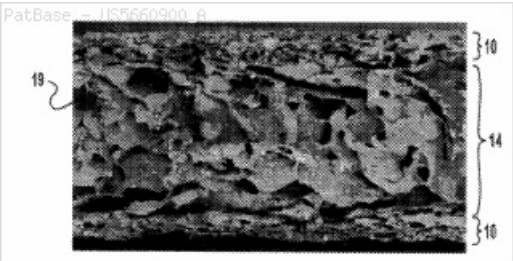

3) Family number: 33376238 (US5662731A) © PatBase

Title: COMPOSITIONS FOR MANUFACTURING FIBER-REINFORCED, STARCH-BOUND ARTICLES HAVING A FOAMED CELLULAR MATRIX

Priority: US19920929898 19920811 US19920982383 19921125 US19930095662 19930721

US19930109100 19930818 US19940218971 19940325 US19940288664 19940809
US19940288667 19940809 US19940327524 19941021

Family:

Publication number	Publication date	Application number	Application date
US5662731 A	19970902	US19940327524	19941021

Probable Assignee: EARTHSHELL SPE LLC

Assignee(s):(std)**:** KHASHOGGI E IND

Assignee(s): E KHASHOGGI IND ; E KHASHOGGI IND LLC ; E KHASHOGGI INDUSTRIES ; EARTHSHELL SPE LLC

Inventor(s):(std)**:** ANDERSEN PER JUST ; HODSON SIMON K

International class (IPC 8-9): B01F3/12 B27N3/00 B28B1/00 B28B1/52 B28B11/00 B28B11/24 B28B13/02 B28B13/06 B28B23/00 B28B3/00 B28B3/02 B28B3/12 B28B3/20 B28B3/26 B28B7/42 B28C7/02 B29C33/36 B29C39/00 B29C39/42 B29C43/00 B29C43/02 B29C43/06 B29C43/08 B29C43/34 B29C43/36 B29C43/38 B29C44/04 B29C45/00 B29C49/00 B29C51/00 B29C51/04 B29C51/10 B29C53/06 B29C55/18 B29C67/20 B29C67/24 B29C70/02 B29C70/12 B29C70/50 B29C71/00 B31B17/00 B32B13/02 B32B27/04 B32B27/20 B32B37/14 B32B5/02 B32B5/14 B32B5/18 B65D43/16 B65D5/00 B65D65/38 B65D65/46 C04B14/06 C04B14/38 C04B16/02 C04B20/00 C04B22/00 C04B22/04 C04B24/00 C04B24/14 C04B24/38 C04B26/00 C04B26/02 C04B26/28 C04B28/00 C04B28/02 C04B32/00 C04B38/00 C04B40/00 C04B40/06 C04B41/45 C04B41/61 C04B7/52 C08J9/00 C08J9/12 C08L1/28 C08L3/00 C08L3/02 C08L5/02 C08L5/12 C08L5/14 C08L89/06 C08L97/02 (Advanced/Invention); B05B11/00 B05C1/08 B05C3/18 B05C5/02 B29C53/58 B32B37/12 E05D1/02 (Advanced/Non-invention)

International class (IPC 1-7): C04B14/38 C08L3/02

CPC: B01F3/1214 B05C1/0826 B05C1/0834 B05C3/18 B05C5/0245 B27N3/002 B27N3/007 B28B1/00 B28B1/52 B28B3/00 B28B3/02 B28B3/126 B28B3/20 B28B3/2645 B28B7/42 B28B11/00 B28B11/003 B28B11/008 B28B11/24 B28B11/245 B28B13/021 B28B13/06 B28B23/00 B28B23/0081 B28B23/0087 B28C7/02 B29C33/10 B29C33/20 B29C33/36 B29C39/003 B29C39/42 B29C43/00 B29C43/003 B29C43/02 B29C43/06 B29C43/08 B29C43/34 B29C43/36 B29C43/38 B29C44/0407 B29C45/0013 B29C49/0005 B29C51/002 B29C51/04 B29C51/10 B29C53/063 B29C53/58 B29C55/18 B29C67/202 B29C67/24 B29C67/242 B29C70/025 B29C70/12 B29C70/50 B29C71/0009 B29C2043/3433 B29C2043/3615 B29C2043/3621 B29C2043/3623 B29C2043/3689 B29C2049/4608 B29C2795/007 B29K2003/00 B29K2005/00 B29K2089/00 B29K2093/00 B29K2105/12 B29K2105/16 B29L2024/00 B29L2031/608 B29L2031/712 B29L2031/7132 B31D1/005 B32B5/02 B32B5/14 B32B5/18 B32B13/02 B32B27/04 B32B27/20 B32B37/12 B32B37/144 B65D5/00 B65D11/02 B65D43/162 B65D65/38 B65D65/466 B65D2301/20 B65D2565/385 C04B7/527 C04B16/02 C04B20/0048 C04B22/002 C04B26/00 C04B26/02 C04B26/026 C04B26/28 C04B26/285 C04B28/00 C04B40/00 C04B40/006 C04B40/0616 C04B41/45 C04B41/61 C08J9/0085 C08J9/12 C08J2303/00 C08L1/28 C08L1/286 C08L3/00 C08L3/02 C08L5/02 C08L5/12 C08L5/14 C08L89/06 C08L97/02 E05D1/02 E05Y2900/602 Y02W30/97 Y02W90/11 B29C44/3402 B31B50/32 B31B2105/0022

European class: B01F3/12B2 B27N3/00B B27N3/00R B28B1/00 B28B1/52 B28B11/00 B28B11/00E B28B11/00E3 B28B11/24 B28B11/24D B28B13/02C B28B13/06 B28B23/00 B28B23/00Z B28B23/00Z1 B28B3/00 B28B3/02 B28B3/12C B28B3/20 B28B3/26E B28B7/42 B28C7/02 B29C33/36 B29C39/00B B29C39/42 B29C43/00B B29C43/02 B29C43/06 B29C43/08 B29C43/34 B29C43/36 B29C43/38 B29C44/04A B29C45/00E B29C49/00B B29C51/00B B29C51/04 B29C51/10 B29C53/06B B29C55/18 B29C67/20C B29C67/22D1 B29C67/24 B29C67/24C B29C70/02A4 B29C70/12 B29C70/50 B29C71/00C B31B1/32 B31B17/00 B31D1/00H1 B32B13/02 B32B27/04 B32B27/20 B32B37/14B B32B5/02 B32B5/14 B32B5/18 B65D11/02 B65D43/16B B65D5/00 B65D65/38 B65D65/46C C04B16/02 C04B20/00F C04B22/00H C04B26/00 C04B26/02 C04B26/02B C04B26/28 C04B26/28B C04B28/00 C04B40/00 C04B40/00D7 C04B40/06A2 C04B41/45 C04B41/61 C04B7/52H C08J9/00N C08J9/12 C08L1/28 C08L1/28F C08L3/00 C08L3/02 C08L5/02 C08L5/12 C08L5/14 C08L89/06 C08L97/02 L05B11/00B5 L05B11/30 L05C1/08P L05C1/08P2 L05C3/18 L05C5/02E L29C33/10 L29C33/20 L29C43/00 L29C43/06 L29C43/08 L29C43/34B L29C43/36C2 L29C43/36C2B L29C43/36C2B1 L29C43/36H2 L29C49/46B1A L29C53/58 L29C795/00D L29K105/12 L29K105/16 L29K3/00 L29K5/00 L29K89/00 L29K93/00 L29L24/00 L29L31/60C L29L31/712 L29L31/7132 L31B201/26A1A L31B217/08A L32B37/12 L65D301/20 L65D565/38Y7 M08J303/00 P05D1/02 P05Y900/602

US class: 106/206.1 106/217.01 106/400 521/68 521/84.1 523/128 536/102 536/107

Classification Explorer

Cited documents: US5569514, US5525281, US5523293, US5512378, US5512135, US5512090, US5501774, US5501771, US5496440, US5494509, US5487813, US5480923, US5476621, US5474856, US5470382, US5462980, US5456933, US5454863, US5447604, US5436078, US5432000, US5428150, US5427614, US5419962, US5415827, US5405564, US5405437, US5397834, US5395438, US5393804, US5393333, US5389322, US5382611, US5382285, US5378418, US5376320, US5372877, US5367067, US5362777, US5362776, US5360844, US5360828, US5360586, US5360473, US5356467, US5352709, US5346541, US5324351, US5320669, US5317119, US5317037, US5314754, US5308879, US5300333, US5298273, US5296526, US5296180, US5290350, US5288765, US5288318, US5284672, US5280055, US5279658, US5278194, US5277764, US5275774, US5273821, US5272181, US5269845, US5268187, US5266368, US5264030, US5262458, US5258430, US5256711, US5252271, US5248702, US5240561, US5234978, US5224595, US5221435, US5209776, US5208267, US5206087, US5194206, US5186990, US5185382, US5178730, US5162126, US5160676, US5160368, US5156718, US5153037, US5141797, US5134179, US5132155, US5126014, US5126013, US5124161, US5122231, US5110413, US5108807 A, US5108677 A, US5106880 A, US5104669 A, US5104487 A, US5095054 A, US5082500 A, US5076985 A, US5071512 A, US5061346 A, US5059642 A, US5043196 A, US5039378 A, US5039003 A, US5035930 A, US4979992 A, US4963603 A, US4957754 A, US4957558 A, US4952278 A, US4950490 A, US4944595 A, US4941922 A, US4927656 A, US4927655 A, US4925530 A, US4923665 A, US4921250 A, US4919758 A, US4912069 A, US4889428 A, US4872913 A, US4863655 A, US4833191 A, US4814012 A, US4789244 A, US4781932 A, US4755494 A, US4753710 A, US4749583 A, US4735811 A, US4711669 A, US4710422 A, US4673438 A, US4655840 A, US4648314 A, US4623150 A, US4613627 A, US4595623 A, US4588443 A, US4552463 A, US4545854 A, US4543370 A, US4529663 A, US4529662 A, US4529653 A, US4511585 A, US4508595 A, US4482386 A, US4462835 A, US4456625 A, US4454268 A, US4445970 A, US4438685 A, US4410571 A, US4394930 A, US4378271 A, US4377440 A, US4329177 A, US4328136 A, US4306059 A, US4303690 A, US4249991 A, US4230502 A, US4229225 A, US4225383 A, US4225247 A, US4210490 A, US4172154 A, US4149550 A, US4133784 A, US4124550 A, US4089691 A, US4080213 A, US4076547 A, US4070196 A, US4044166 A, US4043862 A, US4017324 A, US3968004 A, US3962155 A, US3949145 A, US3914359 A, US3759729 A, US3493382 A, US3117014 A, US3052595 A, US3042578 A, US2968561 A, US2432971 A,

Forward Citations: WO15198178, WO12134883, WO12134673, WO07061457, WO07061457, WO03051738, USRE44601, US9944798, US9901888, US9890083, US9834482, US9725599, US9718258, US9701583, US9475732, US9410361, US9375899, US9327438, US9243444, US9139473, US9080372, US9056967, US9027296, US8927622, US8915033, US8907155, US8881494, US8658714, US8604123, US8598404, US8592641, US8501260, US8382888, US8360008, US8349939, US8329977, US8329289, US8268417, US8152510, US8127720, US8087921, US8057568, US8039050, US8038759, US7981338, US7959704, US7938877, US7938876, US7909003, US7901480, US7862641, US7803855, US7781372, US7666275, US7645361, US7640732, US7578865, US7553363, US7537675, US7486962, US7481645, US7311802, US7235256, US7135063, US6805823, US6656857, US6547867, US6524639, US6478861, US6440204, US6379446, US6372819, US6296795, US6218325, US6176915, US6090195, US2014099874, US2012037531, US2011126776, US2010280149, US2009292067, US2009238912, US2009218347, US2009169894, US2009162638, US2009104314, US2009092786, US2009000260, US2008242530, US2008199369,

US2008147034, US2008093039, US2008029045, US2007264167, US2007220871, US2007202228, US2007110645, US2007108647, US2007107396, US2007107395, US2007092712, US2007020476, US2007004827, US2006156956, US2006119010, US2006110498, US2006096725, US2005147695, US2005089606, US2005006041, US2004265453, US2004177580, US2004177579, US10240089, US10196309, US10077597, EP1456094, EP1456094, CN106808638,

Abstract:
Compositions, methods, and systems for manufacturing articles, particularly containers and packaging materials, having a fiber-reinforced, starch-bound cellular matrix. Suitable mixtures used to form the articles are prepared by first preparing a viscous preblended mixture comprising water, a gelatinized starch-based binder, and fibers having an average length greater than about 2 mm. The highly viscous preblended mixture effectively transfers the shearing forces of the mixer to the fibers. The final moldable mixture is then prepared by mixing into the preblended mixture the remaining starch-based binder, water, and other desired admixtures, e.g., mold-releasing agents, inorganic filler rheology-modifying agents, plasticizers, coating materials, and dispersants, in the correct proportions to form an article which has the desired performance criteria. The moldable mixtures are heated between molds at an elevated temperature and pressure to produce form-stable articles having a desired shape and a selectively controlled foamed structural matrix. The articles may be manufactured to have properties substantially similar to articles presently made from conventional materials like paper, paperboard, polystyrene, plastic, or other organic-based materials and have especial utility in the mass-production of containers, particularly food and beverage containers.

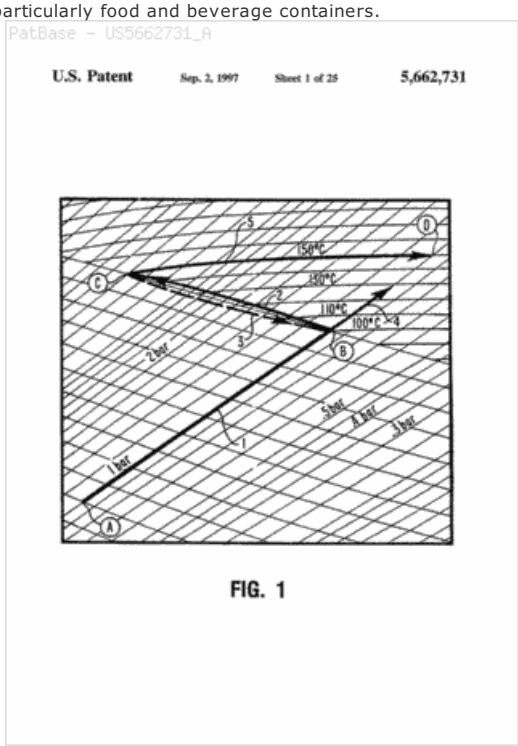

4) Family number: 33376240 (US5679145A)

© PatBase

Title: STARCH-BASED COMPOSITIONS HAVING UNIFORMLY DISPERSED FIBERS USED TO MANUFACTURE HIGH STRENGTH ARTICLES HAVING A FIBER-REINFORCED, STARCH-BOUND CELLULAR MATRIX

Priority: US19920929898 19920811 US19920982383 19921125 US19930095662 19930721 US19930109100 19930818 US19940218971 19940325 US19940288667 19940809 US19940327524 19941021 US19940353783 19941209

Family:

Publication number	Publication date	Application number	Application date
US5679145 A	19971021	US19940353783	19941209

Probable Assignee: E KHASHOGGI IND LLC

Assignee(s):(std)**:** KHASHOGGI E IND

Assignee(s): E KHASHOGGI IND ; E KHASHOGGI IND LLC ; E KHASHOGGI INDUSTRIES

Inventor(s):(std)**:** ANDERSEN PER JUST ; HODSON SIMON K

International class (IPC 8-9): B01F3/12 B05B11/00 B27N3/00 B28B1/00 B28B1/52 B28B11/00 B28B11/24 B28B13/02 B28B13/06 B28B23/00 B28B3/00 B28B3/02 B28B3/12 B28B3/20 B28B3/26 B28B7/42 B28C7/02 B29C33/36 B29C39/00 B29C39/42 B29C43/00 B29C43/02 B29C43/06 B29C43/24 B29C43/34 B29C43/36 B29C43/38 B29C44/04 B29C45/00 B29C49/00 B29C51/00 B29C51/04 B29C51/10 B29C53/06 B29C55/18 B29C67/20 B29C67/24 B29C70/02 B29C70/12 B29C70/50 B29C71/00 B31B17/00 B32B13/02 B32B27/04 B32B27/20 B32B37/14 B32B5/02 B32B5/14 B32B5/18 B65D43/16 B65D5/00 B65D65/38 B65D65/46 C04B14/06 C04B14/42 C04B14/46 C04B14/48 C04B16/02 C04B20/00 C04B22/00 C04B22/04 C04B24/00 C04B24/14 C04B24/38 C04B26/00 C04B26/02 C04B26/28 C04B28/00 C04B28/02 C04B38/00 C04B40/00 C04B40/06 C04B41/45 C04B41/61 C04B7/52 C08J9/00 C08J9/12 C08L1/28 C08L3/00 C08L3/02 C08L5/02 C08L5/12 C08L5/14 C08L89/06 C08L97/02 E05D1/02 (Advanced/Invention)

International class (IPC 1-7): C04B14/38 C08L3/02

CPC: B01F3/1214 B01F2003/125 B05C1/0826 B05C1/0834 B05C3/18 B05C5/0245 B27N3/002 B27N3/007 B28B1/00 B28B1/52 B28B3/00 B28B3/02 B28B3/126 B28B3/20 B28B3/2645 B28B7/42 B28B11/00 B28B11/003 B28B11/008 B28B11/24 B28B11/245 B28B13/021 B28B13/06 B28B23/00 B28B23/0081 B28B23/0087 B28C7/02 B29C33/10 B29C33/20 B29C33/36 B29C39/003 B29C39/42 B29C43/00 B29C43/003 B29C43/02 B29C43/06 B29C43/08 B29C43/24 B29C43/34 B29C43/36 B29C43/38 B29C44/0407 B29C45/0013 B29C49/0005 B29C51/002 B29C51/04 B29C51/10 B29C53/063 B29C53/58 B29C55/18 B29C67/202 B29C67/24 B29C67/242 B29C70/025 B29C70/12 B29C70/50 B29C71/0009 B29C2043/3433 B29C2043/3615 B29C2043/3621 B29C2043/3623 B29C2043/3689 B29C2049/4608 B29C2795/007 B29K2003/00 B29K2005/00 B29K2089/00 B29K2093/00 B29K2105/12 B29K2105/16 B29L2024/00 B29L2031/608 B29L2031/712 B29L2031/7132 B31D1/005 B32B5/02 B32B5/14 B32B5/18

B32B13/02 B32B27/04 B32B27/20 B32B37/12 B32B37/144 B65D5/00 B65D11/02 B65D43/162 B65D65/38 B65D65/466 B65D2301/20 B65D2565/385 C04B7/527 C04B14/064 C04B16/02 C04B20/002 C04B20/0048 C04B22/002 C04B22/04 C04B24/00 C04B24/14 C04B24/38 C04B26/00 C04B26/02 C04B26/026 C04B26/28 C04B26/285 C04B28/00 C04B28/02 C04B38/0006 C04B40/00 C04B40/0032 C04B40/006 C04B40/0616 C04B41/45 C04B41/61 C08J9/0085 C08J9/12 C08J2303/00 C08L1/28 C08L1/286 C08L3/00 C08L3/02 C08L5/02 C08L5/12 C08L5/14 C08L89/06 C08L97/02 E05D1/02 E05Y2900/602 Y02W30/97 Y02W90/11 B29C44/3402 B31B50/32 B31B2105/0022

European class: B01F3/12B2 B05B11/00B5 B27N3/00B B27N3/00R B28B1/00 B28B1/52 B28B11/00 B28B11/00E B28B11/00E3 B28B11/24 B28B11/24D B28B13/02C B28B13/06 B28B23/00 B28B23/00Z B28B23/00Z1 B28B3/00 B28B3/02 B28B3/12C B28B3/20 B28B3/26E B28B7/42 B28C7/02 B29C33/36 B29C39/00B B29C39/42 B29C43/00B B29C43/02 B29C43/06 B29C43/08 B29C43/24 B29C43/34 B29C43/36 B29C43/38 B29C44/04A B29C45/00E B29C49/00B B29C51/00B B29C51/04 B29C51/10 B29C53/06B B29C55/18 B29C67/20C B29C67/22D1 B29C67/24 B29C67/24C B29C70/02A4 B29C70/12 B29C70/50 B29C71/00C B31B1/32 B31B17/00 B31D1/00H1 B32B13/02 B32B27/04 B32B27/20 B32B37/14B B32B5/02 B32B5/14 B32B5/18 B65D11/02 B65D43/16B B65D5/00 B65D65/38 B65D65/46C C04B14/06G C04B16/02 C04B20/00D2 C04B20/00F C04B22/00H C04B22/04 C04B24/00 C04B24/14 C04B24/38 C04B26/00 C04B26/02 C04B26/02B C04B26/28 C04B26/28B C04B28/00 C04B28/02 C04B38/00B C04B40/00 C04B40/00D1 C04B40/00D7 C04B40/06A2 C04B41/45 C04B41/61 C04B7/52H C08J9/00N C08J9/12 C08L1/28 C08L1/28F C08L3/00 C08L3/02 C08L5/02 C08L5/12 C08L5/14 C08L89/06 C08L97/02 E05D1/02 L01F3/12G L05B11/00B5 L05B11/30 L05C1/08P L05C1/08P2 L05C3/18 L05C5/02E L29C33/10 L29C33/20 L29C43/00 L29C43/06 L29C43/08 L29C43/34B L29C43/36C2 L29C43/36C2B L29C43/36C2B1 L29C43/36H2 L29C49/46B1A L29C53/58 L29C795/00D L29K105/12 L29K105/16 L29K3/00 L29K5/00 L29K89/00 L29K93/00 L29L24/00 L29L31/60C L29L31/712 L29L31/7132 L31B201/26A1A L31B217/08A L32B37/12 L65D301/20 L65D565/38Y7 M08J303/00 P05D1/02 P05Y900/602

US class: 106/162.5 106/162.51 106/162.9 106/164.01 106/205.01 106/206.1 106/217.01 106/287.35 106/400 536/102

Classification Explorer

Cited documents: US5569514, US5525281, US5523293, US5512135, US5501774, US5501771, US5496440, US5494509, US5487813, US5480923, US5476621, US5474856, US5470382, US5462980, US5456933, US5454863, US5447604, US5436078, US5432000, US5428150, US5427614, US5419962, US5415827, US5405564, US5405437, US5397834, US5395438, US5393804, US5393333, US5389322, US5382611, US5382285, US5378418, US5376320, US5372877, US5367067, US5362777, US5362776, US5360844, US5360828, US5360586, US5360473, US5356467, US5352709, US5346541, US5324351, US5320669, US5317119, US5317037, US5314754, US5308879, US5300333, US5298273, US5296526, US5296180, US5290350, US5288765, US5288318, US5284672, US5280055, US5279658, US5278194, US5277764, US5275774, US5273821, US5272181, US5269845, US5268187, US5266368, US5264030, US5262458, US5258430, US5256711, US5252271, US5248702, US5240561, US5234978, US5224595, US5221435, US5208267, US5206087, US5194206, US5186990, US5185382, US5178730, US5162126, US5160676, US5160368, US5156718, US5153037, US5141797, US5134179, US5132155, US5126014, US5126013, US5124161 A, US5122231 A, US5110413 A, US5108807 A, US5108677 A, US5106880 A, US5104669 A, US5104487 A, US5095054 A, US5082500 A, US5076985 A, US5071512 A, US5061346 A, US5059642 A, US5043196 A, US5039378 A, US5039003 A, US5035930 A, US4979992 A, US4963603 A, US4957754 A, US4957558 A, US4952278 A, US4950490 A, US4944595 A, US4941922 A, US4927656 A, US4927655 A, US4925530 A, US4923665 A, US4921250 A, US4919758 A, US4912069 A, US4889428 A, US4872913 A, US4863655 A, US4833191 A, US4814012 A, US4789244 A, US4781932 A, US4755494 A, US4753710 A, US4749583 A, US4735811 A, US4711669 A, US4710422 A, US4673438 A, US4655840 A, US4648314 A, US4623150 A, US4613627 A, US4595623 A, US4588443 A, US4552463 A, US4545854 A, US4529663 A, US4529662 A, US4529653 A, US4508595 A, US4482386 A, US4462835 A, US4454268 A, US4445970 A, US4438685 A, US4410571 A, US4394930 A, US4378271 A, US4377440 A, US4329177 A, US4328136 A, US4306059 A, US4303690 A, US4249991 A, US4230502 A, US4229225 A, US4225383 A, US4225247 A, US4210490 A, US4172154 A, US4149550 A, US4133784 A, US4124550 A, US4089691 A, US4080213 A, US4076547 A, US4070196 A, US4044166 A, US4043862 A, US4017324 A, US3968004 A, US3962155 A, US3949145 A, US3914359 A, US3759729 A, US3493382 A, US3117014 A, US3052595 A, US3042578 A, US2968561 A, US2432971 A,

Forward Citations: WO9963015, WO9950346, WO15198178, WO12002914, WO11084955, WO04074367, WO0202705, WO0039213, USD725946, USD710631, USD699447, USD697723, USD677936, USD677935, US9931305, US9901888, US9890083, US9855221, US9845564, US9834482, US9718258, US9714480, US9701583, US9506181, US9475732, US9458556, US9410361, US9375899, US9327438, US9265366, US9243444, US9139473, US9108340, US9080372, US9076428, US9056967, US9027296, US9017586, US8997924, US8927622, US8925228, US8915033, US8907155, US8906277, US8900498, US8900497, US8881494, US8863420, US8808442, US8795470, US8765167, US8764904, US8741443, US8685437, US8658714, US8652378, US8623246, US8604123, US8598404, US8592641, US8591677, US8555536, US8501260, US8454795, US8445101, US8440296, US8382888, US8360008, US8349444, US8329977, US8268417, US8168003, US8152510, US8127720, US8087921, US7989524, US7967904, US7938908, US7909003, US7754119, US7744791, US7731880, US7704328, US7666261, US7635731, US7553363, US7524379, US7481645, US7276201, US7083673, US7041369, US7029620, US7025821, US6977116, US6955850, US6902783, US6878199, US6869990, US6811740, US6808560, US6802895, US6790275, US6709526, US6589327, US6569233, US6547867, US6533854, US6524639, US6478861, US6440204, US6419988, US6372819, US6176915, US6136377, US6090195, US2016143860, US2014099874, US2013171393, US2011233086, US2011186473, US2011126776, US2011113983, US2010280149, US2009258172, US2009165976, US2009104314, US2008134986, US2008029045, US2007202228, US2007148384, US2007027234, US2007021534, US2006255507, US2006110498, US2005244635, US2005120915, US2005089606, US2005076809, US2004265453, US2004186197, US2004183238, US2004177580, US2004177579, US2004149165, US2004132873, US2004081781, US2003216492, US2003203196, US10240089, US10196309, US10111810, US10077597, RU2639981, KR100836496, GB2494109, GB2494109, FR2810990, EP1719797, CN102505577,

Abstract:
Compositions, methods, and systems for manufacturing articles, particularly containers and packaging materials, having a starch-bound cellular matrix reinforced with substantially uniformly dispersed fibers. High strength articles that have adequate flexibility and toughness immediately or very shortly after being demolded without the need for subsequent conditioning are molded from compositions having a starch-based binder and fibers that are uniformly dispersed by means of a high yield stress fluid fraction within the starch-based composition. In a two-step mixing process, a preblended mixture is formed by gelating a portion of the starch-based binder or other thickening agent in water to form a liquid phase having high yield stress into which the fibers are substantially uniformly dispersed. The fibers preferably have an average length of at least about 2 mm and an aspect ratio of at least about 25:1. The remaining starch-based binder, water, and other desired admixtures, such as mold-release agents, inorganic fillers, rheology-modifying agents, plasticizers, integral coating or sealing materials, and dispersants, are added to the preblended mixture to form a moldable starch-based composition, which is molded between heated molds to produce form-stable articles having a desired shape and a selectively controlled foamed structural matrix. Such articles can replace articles presently made from conventional materials like paper, paperboard, polystyrene, plastic, or other organic-based materials and have especial utility in the mass-production of containers, particularly food and beverage containers.

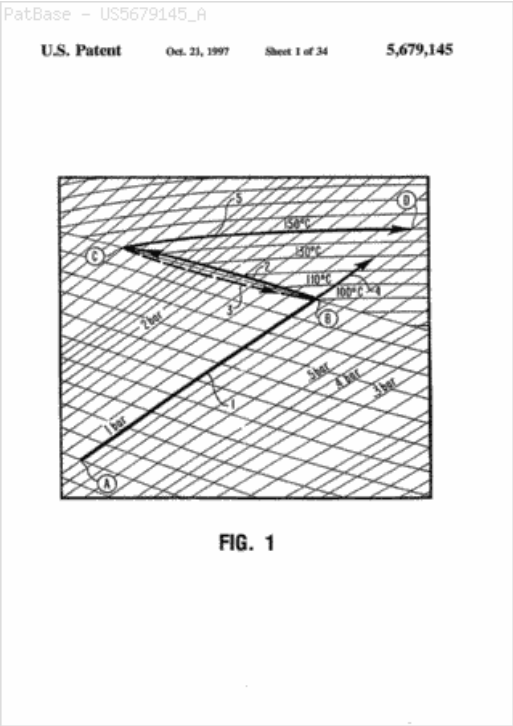

5) Family number: 33376241 (US5683772A)

© PatBase

Title: ARTICLES HAVING A STARCH-BOUND CELLULAR MATRIX REINFORCED WITH UNIFORMLY DISPERSED FIBERS

Priority: US19920929898 19920811 US19920982383 19921125 US19930095662 19930721 US19930109100 19930818 US19940218971 19940325 US19940288667 19940809 US19940327524 19941021 US19940353543 19941209

Family:

Publication number	Publication date	Application number	Application date
US5683772 A	19971104	US19940353543	19941209

Probable Assignee: EARTHSHELL SPE LLC

Assignee(s):(std)**:** KHASHOGGI E IND

Assignee(s): E KHASHOGGI IND ; E KHASHOGGI IND LLC ; E KHASHOGGI INDUSTRIES ; EARTHSHELL SPE LLC

Inventor(s):(std)**:** ANDERSEN PER JUST ; HODSON SIMON K

International class (IPC 8-9): B01F3/12 B05B11/00 B27N3/00 B28B1/00 B28B1/52 B28B11/00 B28B11/24 B28B13/02 B28B13/06 B28B23/00 B28B3/00 B28B3/02 B28B3/12 B28B3/20 B28B3/26 B28B7/42 B28C7/02 B29C33/36 B29C39/00 B29C39/42 B29C43/00 B29C43/02 B29C43/06 B29C43/24 B29C43/34 B29C43/36 B29C43/38 B29C44/04 B29C45/00 B29C49/00 B29C51/00 B29C51/04 B29C51/10 B29C53/06 B29C55/18 B29C67/20 B29C67/24 B29C70/02 B29C70/12 B29C70/50 B29C71/00 B31B17/00 B32B13/02 B32B27/04 B32B27/20 B32B37/14 B32B5/02 B32B5/14 B32B5/18 B65D43/16 B65D5/00 B65D65/38 B65D65/46 C04B14/06 C04B14/42 C04B14/46 C04B14/48 C04B16/02 C04B20/00 C04B22/00 C04B22/04 C04B24/00 C04B24/14 C04B24/38 C04B26/00 C04B26/02 C04B26/28 C04B28/00 C04B28/02 C04B38/00 C04B40/00 C04B40/06 C04B41/45 C04B41/61 C04B7/52 C08J9/00 C08J9/12 C08L1/28 C08L3/00 C08L3/02 C08L5/02 C08L5/12 C08L5/14 C08L89/06 C08L97/02 E05D1/02 (Advanced/Invention)

International class (IPC 1-7): B32B5/14 B32B5/16 B65D85/40

CPC: B01F3/1214 B01F2003/125 B05C1/0826 B05C1/0834 B05C3/18 B05C5/0245 B27N3/002 B27N3/007 B28B1/00 B28B1/52 B28B3/00 B28B3/02 B28B3/126 B28B3/20 B28B3/2645 B28B7/42 B28B11/00 B28B11/003 B28B11/008 B28B11/24 B28B11/245 B28B13/021 B28B13/06 B28B23/00 B28B23/0081 B28B23/0087 B28C7/02 B29C33/10 B29C33/20 B29C33/36 B29C39/003 B29C39/42 B29C43/00 B29C43/003 B29C43/02 B29C43/06 B29C43/08 B29C43/24 B29C43/34 B29C43/36 B29C43/38 B29C44/0407 B29C45/0013 B29C49/0005 B29C51/002 B29C51/04 B29C51/10 B29C53/063 B29C53/58 B29C55/18 B29C67/202 B29C67/24 B29C67/242 B29C70/025 B29C70/12 B29C70/50 B29C71/0009 B29C2043/3433 B29C2043/3615 B29C2043/3621 B29C2043/3623 B29C2043/3689 B29C2049/4608 B29C2795/007 B29K2003/00 B29K2005/00 B29K2089/00 B29K2093/00 B29K2105/12 B29K2105/16 B29L2024/00 B29L2031/608 B29L2031/712 B29L2031/7132 B31D1/005 B32B5/02 B32B5/14 B32B5/18 B32B13/02 B32B27/04 B32B27/20 B32B37/12 B32B37/144 B65D5/00 B65D11/02 B65D43/162 B65D65/38 B65D65/466 B65D2301/20 B65D2565/385 C04B7/527 C04B14/064 C04B16/02 C04B20/002 C04B20/0048 C04B22/002 C04B22/04 C04B24/00 C04B24/14 C04B24/38 C04B26/00 C04B26/02 C04B26/026 C04B26/28 C04B26/285 C04B28/00 C04B28/02 C04B38/0006 C04B40/00 C04B40/0032 C04B40/006 C04B40/0616 C04B41/45 C04B41/61 C08J9/0085 C08J9/12 C08J2303/00 C08L1/28 C08L1/286 C08L3/00 C08L3/02 C08L5/02 C08L5/12 C08L5/14 C08L89/06 C08L97/02 E05D1/02 E05Y2900/602 Y10T428/1372 Y10T428/17 Y10T428/269 Y10T428/2915 Y10T428/249961 Y10T428/249976 Y10T428/249986 Y10T428/249989 Y10T428/249991 Y02W30/97 Y02W90/11 B29C44/3402 B31B50/32 B31B2105/0022

European class: B01F3/12B2 B05B11/00B5 B27N3/00B B27N3/00R B28B1/00 B28B1/52 B28B11/00 B28B11/00E B28B11/00E3 B28B11/24 B28B11/24D B28B13/02C B28B13/06 B28B23/00 B28B23/00Z B28B23/00Z1 B28B3/00 B28B3/02 B28B3/12C B28B3/20 B28B3/26E B28B7/42 B28C7/02 B29C33/36 B29C39/00B B29C39/42 B29C43/00B B29C43/02 B29C43/06 B29C43/08 B29C43/24 B29C43/34 B29C43/36 B29C43/38 B29C44/04A B29C45/00E B29C49/00B B29C51/00B B29C51/04 B29C51/10 B29C53/06B B29C55/18 B29C67/20C B29C67/22D1 B29C67/24 B29C67/24C B29C70/02A4 B29C70/12 B29C70/50 B29C71/00C B31B1/32 B31B17/00 B31D1/00H1 B32B13/02 B32B27/04 B32B27/20 B32B37/14B B32B5/02 B32B5/14 B32B5/18 B65D11/02 B65D43/16B B65D5/00 B65D65/38 B65D65/46C

C04B14/06G C04B16/02 C04B20/00D2 C04B20/00F C04B22/00H C04B22/04 C04B24/00 C04B24/14 C04B24/38 C04B26/00 C04B26/02 C04B26/02B C04B26/28 C04B26/28B C04B28/00 C04B28/02 C04B38/00B C04B40/00 C04B40/00D1 C04B40/00D7 C04B40/06A2 C04B41/45 C04B41/61 C04B7/52H C08J9/00N C08J9/12 C08L1/28 C08L1/28F C08L3/00 C08L3/02 C08L5/02 C08L5/12 C08L5/14 C08L89/06 C08L97/02 E05D1/02 L01F3/12G L05B11/00B5 L05B11/30 L05C1/08P L05C1/08P2 L05C3/18 L05C5/02E L29C33/10 L29C33/20 L29C43/00 L29C43/06 L29C43/08 L29C43/34B L29C43/36C2 L29C43/36C2B L29C43/36C2B1 L29C43/36H2 L29C49/46B1A L29C53/58 L29C795/00D L29K105/12 L29K105/16 L29K3/00 L29K5/00 L29K89/00 L29K93/00 L29L24/00 L29L31/60C L29L31/712 L29L31/7132 L31B201/26A1A L31B217/08A L32B37/12 L65D301/20 L65D565/38Y7 M08J303/00 P05D1/02 P05Y900/602

US class: 160/36.4 206/524.3 206/524.6 206/524.7 428/220 428/310.5 428/314.4 428/317.9 428/318.8 428/319.3 428/339 428/36.4 428/36.5 428/365 428/53

Classification Explorer

Cited documents: US5545450, US5512378, US5512090, US5508072, US5506277, US5506046, US5500089, US5411639, US5372877, US5362777, US5362776, US5360586, US5346541, US5320669, US5317119, US5317037, US5314754, US5308879, US5300333, US5298273, US5290350, US5288765, US5288318, US5284672, US5279658, US5278194, US5277764, US5275774, US5273821, US5273167, US5272181, US5269845, US5268187, US5266368, US5264080, US5264030, US5262458, US5258430, US5256711, US5253743, US5252271, US5248702, US5240561, US5224595, US5221435, US5208267, US5206087, US5201403, US5194206, US5186990, US5185382, US5178730, US5178677, US5162126, US5160676, US5160368, US5156718, US5153037, US5141797, US5134179, US5132155, US5126014, US5126013, US5122231, US5110413, US5108677, US5106880, US5104669, US5104487, US5103717, US5095054, US5082500, US5076985, US5071512 A, US5061346 A, US5048403 A, US5043196 A, US5039378 A, US5039003 A, US5035930 A, US5032414 A, US5032413 A, US4979992 A, US4963603 A, US4957754 A, US4957558 A, US4953453 A, US4952278 A, US4944595 A, US4943349 A, US4941922 A, US4927656 A, US4927655 A, US4925530 A, US4923665 A, US4921250 A, US4919758 A, US4912069 A, US4892590 A, US4889428 A, US4872913 A, US4863655 A, US4846932 A, US4833191 A, US4828650 A, US4814012 A, US4789244 A, US4775580 A, US4755494 A, US4753710 A, US4749583 A, US4711669 A, US4710422 A, US4710117 A, US4694741 A, US4673438 A, US4669603 A, US4648314 A, US4625856 A, US4624855 A, US4623150 A, US4613627 A, US4602590 A, US4595623 A, US4588443 A, US4567049 A, US4562218 A, US4552463 A, US4550655 A, US4545854 A, US4529663 A, US4529662 A, US4529653 A, US4524682 A, US4508595 A, US4462835 A, US4454268 A, US4445970 A, US4438685 A, US4410571 A, US4394930 A, US4378271 A, US4377440 A, US4329177 A, US4328136 A, US4306059 A, US4303690 A, US4249991 A, US4230502 A, US4225383 A, US4225247 A, US4210490 A, US4204337 A, US4172154 A, US4149550 A, US4124550 A, US4094077 A, US4089691 A, US4080213 A, US4070196 A, US4044166 A, US4043862 A, US4017324 A, US3968004 A, US3962155 A, US3914359 A, US3759729 A, US3493382 A, US3117014 A, US3052595 A, US3042578 A, US2968561 A, US2432971 A,

Forward Citations: WO15198178, WO02076730, WO0174939, WO0174556, WO0156773, WO0039215, WO0039214, USRE39339, USD725946, USD710631, USD699447, USD697723, USD677936, USD677935, US9901888, US9890083, US9701583, US9695592, US9613609, US9593206, US9475732, US9410361, US9375899, US9265366, US9243444, US9139473, US9115498, US9080372, US9076428, US9027296, US8997924, US8968621, US8927622, US8925228, US8915033, US8881494, US8863420, US8820028, US8808442, US8741443, US8658714, US8604123, US8591677, US8555536, US8501260, US8445101, US8440296, US8382936, US8382888, US8349444, US8268417, US8152510, US8087921, US7981338, US7967904, US7638080, US7553363, US7481645, US7282273, US7235256, US7201958, US7135063, US7083673, US6955844, US6878199, US6808560, US6805823, US6790275, US6716379, US6569233, US6494704, US6379446, US6347934, US6176915, US6030673, US2015320024, US2015008070, US2014255642, US2014113124, US2014020335, US2013209782, US2012064206, US2011113983, US2010280149, US2010216909, US2010107550, US2009292042, US2009258172, US2009098303, US2008268220, US2008092507, US2008003384, US2007240823, US2007202228, US2007196581, US2007148384, US2007092718, US2007092712, US2007004827, US2006255507, US2006150868, US2006110498, US2005147695, US2005120915, US2005089606, US2004265453, US2004224139, US2004207113, US2004178540, US2004177580, US2004177579, US2004157050, US2003219580, US10246554, US10240089, US10196309, US10077597, NL1010916, NL1010915, EP1293443, EP1265957, AU778476, AU775754,

Abstract:
Compositions, methods, and systems for manufacturing articles, particularly containers and packaging materials, having a starch-bound cellular matrix reinforced with substantially uniformly dispersed fibers. High strength articles that have adequate flexibility and toughness immediately or very shortly after being demolded without the need for subsequent conditioning are molded from compositions having a starch-based binder and fibers that are uniformly dispersed by means of a high yield stress fluid fraction within the starch-based composition. In a two-step mixing process, a preblended mixture is formed by gelating a portion of the starch-based binder or other thickening agent in water to form a liquid phase having high yield stress into which the fibers are substantially uniformly dispersed. The fibers preferably have an average length of at least about 2 mm and an aspect ratio of at least about 25:1. The remaining starch-based binder, water, and other desired admixtures, such as mold-release agents, inorganic fillers, rheology-modifying agents, plasticizers, integral coating or sealing materials, and dispersants, are added to the preblended mixture to form a moldable starch-based composition, which is molded between heated molds to produce form-stable articles having a desired shape and a selectively controlled foamed structural matrix. Such articles can replace articles presently made from conventional materials like paper, paperboard, polystyrene, plastic, or other organic-based materials and have especial utility in the mass-production of containers, particularly food and beverage containers.

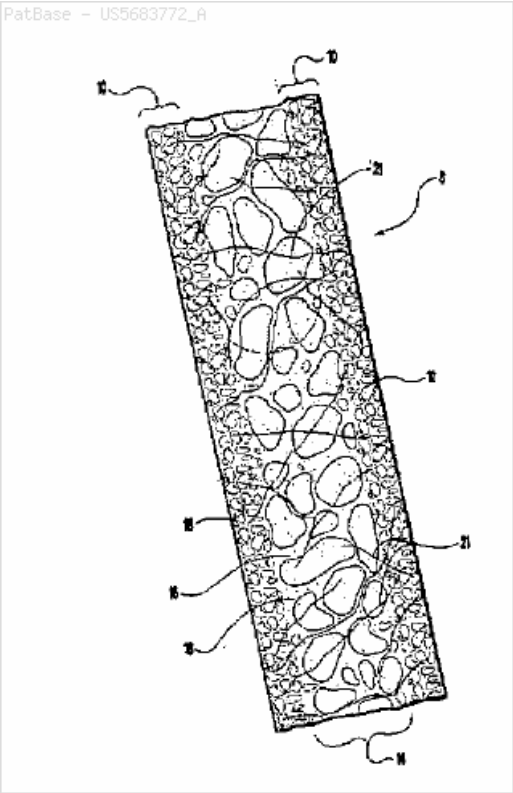

6) Family number: 33376249 (US5709827A)

© PatBase

Title: METHODS FOR MANUFACTURING ARTICLES HAVING A STARCH-BOUND CELLULAR MATRIX

Priority: US19920929898 19920811 US19920982383 19921125 US19930095662 19930721 US19930109100 19930818 US19940218971 19940325 US19940288667 19940809 US19940327524 19941021 US19940353544 19941209

Family:

Publication number	Publication date	Application number	Application date
US5709827 A	19980120	US19940353544	19941209

Probable Assignee: EARTHSHELL SPE LLC

Assignee(s):(std)**:** KHASHOGGI E IND

Assignee(s): E KHASHOGGI IND ; E KHASHOGGI IND LLC ; E KHASHOGGI INDUSTRIES ; EARTHSHELL SPE LLC

Inventor(s):(std)**:** ANDERSEN PER JUST ; HODSON SIMON K

International class (IPC 8-9): B01F3/12 B05B11/00 B27N3/00 B28B1/00 B28B1/52 B28B11/00 B28B11/24 B28B13/02 B28B13/06 B28B23/00 B28B3/00 B28B3/02 B28B3/12 B28B3/20 B28B3/26 B28B7/42 B28C7/02 B29C33/36 B29C39/00 B29C39/42 B29C43/00 B29C43/02 B29C43/06 B29C43/24 B29C43/34 B29C43/36 B29C43/38 B29C44/04 B29C45/00 B29C49/00 B29C51/00 B29C51/04 B29C51/10 B29C53/06 B29C55/18 B29C67/20 B29C67/24 B29C70/02 B29C70/12 B29C70/50 B29C71/00 B31B17/00 B32B13/02 B32B27/04 B32B27/20 B32B37/14 B32B5/02 B32B5/14 B32B5/18 B65D43/16 B65D5/00 B65D65/38 B65D65/46 C04B14/06 C04B14/42 C04B14/46 C04B14/48 C04B16/02 C04B20/00 C04B22/00 C04B22/04 C04B24/00 C04B24/14 C04B24/38 C04B26/00 C04B26/02 C04B26/28 C04B28/00 C04B28/02 C04B38/00 C04B40/00 C04B40/06 C04B41/45 C04B41/61 C04B7/52 C08J9/00 C08J9/12 C08L1/28 C08L3/00 C08L3/02 C08L5/02 C08L5/12 C08L5/14 C08L89/06 C08L97/02 E05D1/02 (Advanced/Invention);
B01F3/12 B05B11/00 B27N3/00 B28B1/00 B28B1/52 B28B11/00 B28B13/00 B28B23/00 B28B3/00 B28B3/02 B28B3/20 B28B3/26 B28B7/40 B28C7/00 B29C33/00 B29C39/00 B29C39/42 B29C43/00 B29C43/02 B29C43/04 B29C43/24 B29C43/34 B29C43/36 B29C44/02 B29C45/00 B29C49/00 B29C51/00 B29C51/10 B29C53/00 B29C55/18 B29C67/20 B29C67/24 B29C70/00 B29C70/04 B29C70/10 B29C71/00 B31B17/00 B32B13/00 B32B27/04 B32B27/20 B32B37/14 B32B5/02 B32B5/14 B32B5/18 B65D43/16 B65D5/00 B65D65/38 B65D65/46 C04B14/02 C04B14/38 C04B16/00 C04B20/00 C04B22/00 C04B24/00 C04B26/00 C04B28/00 C04B38/00 C04B40/00 C04B41/45 C04B41/60 C04B7/00 C08J9/00 C08L1/00 C08L3/00 C08L5/00 C08L89/00 C08L97/00 E05D1/00 (Core/Invention)

International class (IPC 1-7): B29C65/00

CPC: B32B37/144 B01F3/1214 B01F2003/125 B27N3/002 B27N3/007 B28B1/00 B28B1/52 B28B3/00 B28B3/02 B28B3/126 B28B3/20 B28B3/2645 B28B7/42 B28B11/00 B28B11/003 B28B11/008 B28B11/24 B28B11/245 B28B13/021 B28B13/06 B28B23/00 B28B23/0081 B28B23/0087 B28C7/02 B29C33/10 B29C33/20 B29C33/36 B29C39/003 B29C39/42 B29C43/003 B29C43/02 B29C43/06 B29C43/24 B29C43/34 B29C43/36 B29C43/38 B29C44/0407 B29C45/0013 B29C49/0005 B29C51/002 B29C51/04 B29C51/10 B29C53/063 B29C55/18 B29C67/202 B29C67/24 B29C67/242 B29C70/025 B29C70/12 B29C70/50 B29C71/0009 B29C2043/3433 B29C2043/3621 B29C2043/3623 B29C2049/4608 B31D1/005 B32B5/02 B32B5/14 B32B5/18 B32B13/02 B32B27/04 B32B27/20 B65D5/00 B65D11/02 B65D43/162 B65D65/38 B65D65/466 B65D2301/20 B65D2565/385 C04B7/527 C04B14/064 C04B16/02 C04B20/002 C04B20/0048 C04B22/002 C04B22/04 C04B24/00 C04B24/14 C04B24/38 C04B26/00 C04B26/02 C04B26/026 C04B26/28 C04B26/285 C04B28/00 C04B28/02 C04B38/0006 C04B40/00 C04B40/0032 C04B40/006 C04B40/0616 C04B41/45 C04B41/61 C08J9/0085 C08J9/12 C08J2303/00 C08L1/28 C08L1/286 C08L3/00 C08L3/02 C08L5/02 C08L5/12 C08L5/14 C08L89/06 C08L97/02 E05D1/02 E05Y2900/602 Y02W90/11 B29C44/3402 B31B50/32 B31B2105/0022

European class: B01F3/12B2 B05B11/00B5 B27N3/00B B27N3/00R B28B1/00 B28B1/52 B28B11/00 B28B11/00E B28B11/00E3 B28B11/24 B28B11/24D B28B13/02C B28B13/06 B28B23/00 B28B23/00Z B28B23/00Z1 B28B3/00 B28B3/02 B28B3/12C B28B3/20 B28B3/26E B28B7/42 B28C7/02 B29C33/36 B29C39/00B

B29C39/42 B29C43/00B B29C43/02 B29C43/06 B29C43/24 B29C43/34 B29C43/36 B29C43/38 B29C44/04A B29C45/00E B29C49/00B B29C51/00B B29C51/04 B29C51/10 B29C53/06B B29C55/18 B29C67/20C B29C67/22D1 B29C67/24 B29C67/24C B29C70/02A4 B29C70/12 B29C70/50 B29C71/00C B31B1/32 B31B17/00 B31D1/00H1 B32B13/02 B32B27/04 B32B27/20 B32B37/14B B32B5/02 B32B5/14 B32B5/18 B65D11/02 B65D43/16B B65D5/00 B65D65/38 B65D65/46C C04B14/06G C04B16/02 C04B20/00D2 C04B20/00F C04B22/00H C04B22/04 C04B24/00 C04B24/14 C04B24/38 C04B26/00 C04B26/02 C04B26/02B C04B26/28 C04B26/28B C04B28/00 C04B28/02 C04B38/00B C04B40/00 C04B40/00D1 C04B40/00D7 C04B40/06A2 C04B41/45 C04B41/61 C04B7/52H C08J9/00N C08J9/12 C08L1/28 C08L1/28F C08L3/00 C08L3/02 C08L5/02 C08L5/12 C08L5/14 C08L89/06 C08L97/02 E05D1/02 L01F3/12G L29C33/10 L29C33/20 L29C43/06 L29C43/34B L29C43/36C2B L29C43/36C2B1 L29C49/46B1A L31B201/26A1A L31B217/08A L65D301/20 L65D565/38Y7 M08J303/00 P05D1/02 P05Y900/602

US class: 264/102 264/129 264/232 264/327 264/330 264/42 264/53

Classification Explorer

Cited documents: US5569514, US5525281, US5523293, US5512378, US5512135, US5512090, US5506277, US5501774, US5501771, US5500089, US5496440, US5494509, US5487813, US5480923, US5476621, US5474856, US5470382, US5462980, US5456933, US5454863, US5447604, US5436078, US5432000, US5428150, US5427614, US5419962, US5415827, US5411639, US5405564, US5405437, US5397834, US5395438, US5393804, US5393333, US5389322, US5382611, US5382285, US5378418, US5372877, US5367320, US5367067, US5362777, US5362776, US5360844, US5360828, US5360586, US5360473, US5356467, US5352709, US5346541, US5324351, US5320669, US5317119, US5317037, US5314754, US5308879, US5300333, US5298273, US5296526, US5296180, US5290350, US5288765, US5288318, US5284672, US5280055, US5279658, US5278194, US5277764, US5275774, US5273821, US5273167, US5272181, US5269845, US5268187, US5266368, US5264080, US5264030, US5262458, US5258430, US5256711, US5253743, US5252271, US5248702, US5240561, US5234978, US5224595, US5221435, US5208267, US5206087, US5201403, US5194206, US5186990, US5185382, US5178730, US5178677, US5162126, US5160676, US5160368, US5156718, US5153037, US5141797, US5134179, US5132155, US5126014, US5126013, US5124161, US5122231, US5110413, US5108807, US5108677, US5106880, US5104669, US5104487, US5103717, US5095054, US5082500, US5076985, US5071512, US5061346, US5059642, US5048403, US5043196, US5039378, US5039003, US5035930, US5032414, US5032413, US4979992, US4963603 A, US4957754 A, US4957558 A, US4953453 A, US4952278 A, US4950490 A, US4944595 A, US4943349 A, US4941922 A, US4927656 A, US4927655 A, US4925530 A, US4923665 A, US4921250 A, US4919758 A, US4912069 A, US4892590 A, US4889428 A, US4872913 A, US4863655 A, US4846932 A, US4833191 A, US4828650 A, US4814012 A, US4789244 A, US4781932 A, US4775580 A, US4755494 A, US4753710 A, US4749583 A, US4735811 A, US4711669 A, US4710422 A, US4710117 A, US4707221 A, US4694741 A, US4673438 A, US4669603 A, US4655840 A, US4648314 A, US4625856 A, US4624855 A, US4623150 A, US4613627 A, US4602590 A, US4595623 A, US4588443 A, US4567049 A, US4562218 A, US4552463 A, US4550655 A, US4545854 A, US4529663 A, US4529662 A, US4529653 A, US4524682 A, US4508595 A, US4482386 A, US4462835 A, US4454268 A, US4445970 A, US4438685 A, US4410571 A, US4394930 A, US4378271 A, US4377440 A, US4329177 A, US4328136 A, US4306059 A, US4303690 A, US4249991 A, US4230502 A, US4229225 A, US4225383 A, US4225247 A, US4210490 A, US4204337 A, US4172154 A, US4149550 A, US4133784 A, US4124550 A, US4094077 A, US4089691 A, US4080213 A, US4076547 A, US4070196 A, US4044166 A, US4043862 A, US4017324 A, US3968004 A, US3962155 A, US3949145 A, US3914359 A, US3759729 A, US3493382 A, US3117014 A, US3052595 A, US3042578 A, US2968561 A, US2432971 A,

Forward Citations: WO15056278, WO05089985, WO05089985, WO0119579, US9915331, US9890083, US9878484, US9850362, US9701583, US9475732, US9410361, US9375899, US9243444, US9080372, US9027296, US8927622, US8915033, US8881494, US8808442, US8741443, US8658714, US8604123, US8528734, US8501260, US8382888, US8360008, US8268417, US8152510, US8127720, US8101235, US8087921, US8062427, US8048230, US7972443, US7967904, US7942658, US7909003, US7883583, US7803743, US7553363, US7481645, US7235256, US7083673, US6878199, US6869990, US6676862, US6521147, US6412932, US2015065591, US2014265004, US2011126776, US2011113983, US2011062308, US2010280149, US2010122659, US2010122658, US2009238912, US2009218347, US2009176016, US2008092507, US2008029045, US2007202228, US2007148384, US2006272815, US2006255507, US2006110498, US2005147695, US2005120915, US2005089606, US2004265453, US2004186197, US2004177580, US2004177579, US2003216492, US2003068427, US2003039781, US10240089, US10196309, US10131072, US10077597, EP2933077, EP1265957, CN104419018, CN104419018,

Abstract:
Compositions, methods, and systems for manufacturing articles, particularly containers and packaging materials, having a starch-bound cellular matrix reinforced with substantially uniformly dispersed fibers. High strength articles that have adequate flexibility and toughness immediately or very shortly after being demolded without the need for subsequent conditioning are molded from compositions having a starch-based binder and fibers that are uniformly dispersed by means of a high yield stress fluid fraction within the starch-based composition. In a two-step mixing process, a preblended mixture is formed by gelating a portion of the starch-based binder or other thickening agent in water to form a liquid phase having high yield stress into which the fibers are substantially uniformly dispersed. The fibers preferably have an average length of at least about 2 mm and an aspect ratio of at least about 25:1. The remaining starch-based binder, water, and other desired admixtures, such as mold-release agents, inorganic fillers, rheology-modifying agents, plasticizers, integral coating or sealing materials, and dispersants, are added to the preblended mixture to form a moldable starch-based composition, which is molded between heated molds to produce form-stable articles having a desired shape and a selectively controlled foamed structural matrix. Such articles can replace articles presently made from conventional materials like paper, paperboard, polystyrene, plastic, or other organic-based materials and have especial utility in the mass-production of containers, particularly food and beverage containers.

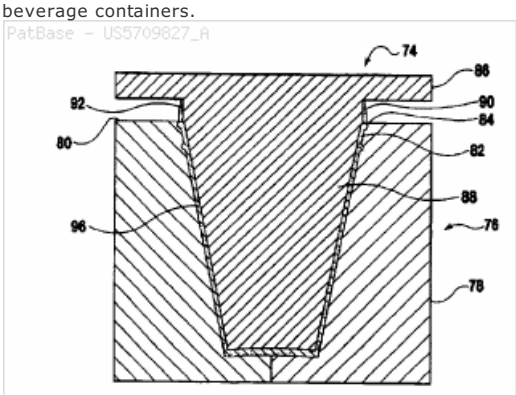

7) Family number: 33376253 (US5736209A)

© PatBase

Title: COMPOSITIONS HAVING A HIGH UNGELATINIZED STARCH CONTENT AND SHEETS MOLDED THEREFROM

Priority: US19930152354 19931119 US19930158824 19931124 US19940192965 19940207 US19960629539 19960409

Family:

Publication number	Publication date	Application number	Application date
US5736209 A	19980407	US19960629539	19960409

Probable Assignee: E KHASHOGGI IND LLC

Assignee(s):(std)**:** KHASHOGGI E IND

Assignee(s): E KASHOGGI IND LLC ; E KASHOGGI INDUSTRIES LLC ; E KHASHOGGI IND ; E KHASHOGGI IND LLC

Inventor(s):(std)**:** ANDERSEN PER JUST ; CHRISTENSEN BRUCE J ; HODSON SIMON K ; ONG SHAODE

International class (IPC 8-9): B05B11/00 B27N3/00 B28B1/00 B28B1/52 B28B11/00 B28B23/00 B28B3/12 B28B3/20 B29C43/00 B29C43/02 B29C43/06 B29C43/08 B29C43/22 B29C43/24 B29C43/34 B29C43/36 B29C43/46 B29C44/04 B29C45/00 B29C47/00 B29C47/50 B29C47/52 B29C49/00 B29C49/06 B29C51/00 B29C51/04 B29C51/10 B29C53/06 B29C55/18 B29C67/24 B29C70/50 B29C71/00 B31B17/00 B32B13/02 B32B27/04 B32B27/20 B32B37/14 B32B5/02 B32B5/18 B32B9/00 B65D43/16 B65D65/38 B65D65/46 C04B16/02 C04B26/00 C04B26/02 C04B26/28 C04B28/00 C04B40/00 C08J5/04 C08J5/18 C08K3/00 C08L1/26 C08L1/28 C08L3/00 C08L3/02 C08L5/02 C08L5/12 C08L5/14 C08L89/06 C08L97/02 E05D1/02 (Advanced/Invention);
B05C5/02 B29C49/04 B29C51/08 B29C53/58 B32B37/12 (Advanced/Non-invention);
B32B37/12 (Core/Non-invention)

International class (IPC 1-7): B32B1/08 B32B23/18 B32B5/02

CPC: Y10S428/906 Y10S977/707 B05B11/0037 B05B11/30 B05C5/0245 B27N3/002 B27N3/007 B28B1/00 B28B1/52 B28B3/126 B28B3/20 B28B11/00 B28B11/003 B28B23/00 B28B23/0081 B28B23/0087 B29C43/00 B29C43/003 B29C43/02 B29C43/08 B29C43/22 B29C43/222 B29C43/24 B29C43/34 B29C43/46 B29C44/0407 B29C45/0013 B29C49/0005 B29C49/0047 B29C49/04 B29C49/06 B29C49/063 B29C51/002 B29C51/04 B29C51/08 B29C51/082 B29C51/10 B29C53/063 B29C53/58 B29C55/18 B29C67/24 B29C67/242 B29C70/50 B29C71/0009 B29C2043/3433 B29C2043/463 B29C2049/4608 B29C2791/006 B29C2795/007 B29K2001/00 B29K2003/00 B29K2005/00 B29K2089/00 B29K2105/06 B29K2105/12 B29K2105/16 B29K2995/006 B29L2024/00 B29L2031/608 B29L2031/712 B29L2031/7132 B31D1/005 B32B5/02 B32B5/18 B32B9/00 B32B13/02 B32B27/04 B32B27/20 B32B37/12 B32B37/144 B65D43/162 B65D65/38 B65D65/466 B65D2565/385 C04B26/02 C04B26/28 C04B26/285 C04B40/00 C04B2111/00612 C04B2111/00948 C08J2303/02 C08J2323/02 C08L1/28 C08L1/286 C08L3/00 C08L3/02 C08L5/02 C08L5/12 C08L5/14 C08L89/06 C08L97/02 E05D1/02 E05Y2900/602 Y10T428/1372 Y10T428/1376 Y10T428/1397 Y10T428/15 Y10T428/24446 Y10T428/24694 Y10T428/249986 Y10T428/31971 Y02W30/97 Y02W90/11 B31B50/32 B31B2105/0022 B32B9/04 B32B3/266 B32B3/28 B32B9/02 B32B23/04 B32B23/22 B32B2307/518 B32B2307/716 B32B2307/7163 B32B2439/00 C08J5/18 B29C48/001 B29C48/0011 B29C48/0017 B29C48/0018 B29C48/0019 B29C48/0022 B29C48/0023 B29C48/022 B29C48/05 B29C48/07 B29C48/08 B29C48/13 B29C48/38 B29C48/465

European class: B05B11/00B5 B27N3/00B B27N3/00R B28B1/00 B28B1/52 B28B11/00 B28B11/00E B28B23/00 B28B23/00Z B28B23/00Z1 B28B3/12C B28B3/20 B29C43/00B B29C43/02 B29C43/22 B29C43/22B B29C43/24 B29C43/34 B29C43/46 B29C44/04A B29C45/00E B29C47/00B B29C47/00J5 B29C47/50 B29C47/52B B29C49/00B B29C49/06B2B B29C51/00B B29C51/04 B29C51/10 B29C53/06B B29C55/18 B29C67/24 B29C67/24C B29C70/50 B29C71/00C B31B1/32 B31B17/00 B31D1/00H1 B32B13/02 B32B27/04 B32B27/20 B32B37/14B B32B5/02 B32B5/18 B32B9/00 B65D43/16B B65D65/38 B65D65/46C C04B26/02 C04B26/28 C04B26/28B C04B40/00 C08J5/18 C08L1/28 C08L1/28F C08L3/00 C08L3/02 C08L5/02 C08L5/12 C08L5/14 C08L89/06 C08L97/02 E05D1/02 L05B11/30 L05C5/02E L29C43/00 L29C43/08 L29C43/34B L29C43/46 L29C43/46A2 L29C47/00J10 L29C47/00J4 L29C47/00J5 L29C47/00L L29C47/00L13 L29C47/00L4 L29C47/00L7 L29C47/00L8 L29C47/00L9 L29C49/00F L29C49/04 L29C49/06 L29C49/46B1A L29C51/04 L29C51/08 L29C51/08B L29C51/10 L29C53/58 L29C791/00E4 L29C795/00D L29K1/00 L29K105/06 L29K105/12 L29K105/16 L29K3/00 L29K5/00 L29K89/00 L29K995/00F14B L29L24/00 L29L31/60C L29L31/712 L29L31/7132 L31B201/26A1A L31B217/08A L32B37/12 L65D565/38Y7 M04B111/00T6 M04B111/00T66 M08J303/02 M08J323/02 P05D1/02 P05Y900/602

US class: 428/152 428/182 428/317.9 428/36.4 428/36.5 428/36.92 428/43 428/532 428/906

Classification Explorer

Cited documents: US5631053, US5580624, US5569514, US5545450, US5525281, US5523293, US5512378, US5512135, US5512090, US5508072, US5506277, US5506046, US5501774, US5501771, US5500089, US5496440, US5494509, US5487813, US5480923, US5476621, US5474856, US5470382, US5462980, US5456933, US5454863, US5447604, US5436078, US5432000, US5428150, US5427614, US5419962, US5415827, US5411639, US5405564, US5405437, US5397834, US5395438, US5393804, US5393333, US5389322, US5382611, US5382285, US5380180, US5378418, US5376320, US5372877, US5367067, US5362777, US5362776, US5360844, US5360828, US5360586, US5360473, US5356467, US5352709, US5346541, US5324351, US5320669, US5317119, US5317037, US5314754, US5308879, US5300333, US5298273, US5296526, US5296180, US5290350, US5288765, US5288318, US5284672, US5280055, US5279658, US5278194, US5277764, US5275774, US5273821, US5273167, US5272181, US5269845, US5268187, US5266368, US5264080, US5264030, US5262458, US5258430, US5256711, US5252271, US5248702, US5240561, US5234978, US5224595, US5221435, US5208267, US5206087, US5201403, US5194206, US5186990, US5185382, US5178730, US5162126, US5160368, US5153037, US5134179, US5126014 A, US5126013 A, US5124161 A, US5122231 A, US5110413 A, US5108807 A, US5108677 A, US5106880 A, US5104669 A, US5104487 A, US5095054 A, US5082500 A, US5076985 A, US5071512 A, US5061346 A, US5059642 A, US5043196 A, US5039378 A, US5039003 A, US5035930 A, US4979992 A, US4963603 A, US4957754 A, US4957558 A, US4953453 A, US4952278 A, US4950490 A, US4944595 A, US4943349 A, US4941922 A, US4927656 A, US4927655 A, US4925530 A, US4923665 A, US4921250 A, US4919758 A, US4912069 A, US4892590 A, US4872913 A, US4863655 A, US4846932 A, US4833191 A, US4828650 A, US4814012 A, US4789244 A, US4781932 A, US4775580 A, US4755494 A, US4753710 A, US4749583 A, US4735811 A, US4711669 A, US4710442 A, US4673438 A, US4655840 A, US4624855 A, US4623150 A, US4613627 A, US4595623 A, US4588443 A, US4562218 A, US4545854 A, US4529653 A, US4524682 A, US4511585 A, US4508595 A, US4482386 A, US4456625 A, US4454268 A, US4445970 A, US4438685 A, US4410571 A, US4394930 A, US4378271 A, US4377440 A, US4329177 A, US4328136 A, US4306059 A, US4303690 A, US4249991 A, US4229225 A, US4225383 A, US4225247 A, US4210490 A, US4204337 A, US4172154 A, US4149550 A, US4133784 A, US4124550 A, US4094077 A, US4089691 A, US4080213 A, US4076547 A, US4070196 A, US4044166 A, US4043862 A, US4017324 A, US3968004 A, US3949145 A, US3493382 A,

Forward Citations: WO13190345, WO13180756, WO11034479, WO08128589, WO03099539, WO03055768, WO0027611, USRE39339, US9890083, US9802871, US9701583, US9617178, US9580846, US9518360, US9480815, US9475732, US9410361, US9375899, US9353482, US9243444, US9187288, US9139957, US9080372, US9039651, US9034478, US9027296, US8927622, US8915033, US8881494, US8741443, US8673398, US8658714, US8608018, US8604123, US8541074, US8501260, US8486439, US8383134, US8382888, US8360008, US8349443, US8268417, US8152510, US8133533, US8127720, US8087921, US7981338, US7967904, US7909003, US7553363, US7481645, US7135063, US7083673, US6878199, US6805823, US6706145, US6478494, US6468133, US6416606, US6379446, US6176915, US6168857, US6083601,

US6083586, US2018244448, US2015321408, US2014335323, US2014283447, US2012309246, US2012089075, US2012056352, US2011210164, US2011126776, US2011071507, US2010280149, US2010247781, US2010080839, US2010015185, US2009258172, US2009238912, US2009218347, US2009196998, US2008268158, US2008256821, US2008230001, US2008029045, US2007290024, US2007202228, US2007148384, US2007004827, US2006255507, US2006110498, US2005120915, US2005089606, US2004265453, US2004202632, US2003216492, US10246236, US10240089, US10196309, US10077597, NL1012919, ITPO20100008, EP2855369, EP1887035, EP1265957, EP1232207, EP1232207, EP1128947, CN102039735, AU2010280469,

Abstract:
Compositions and methods for manufacturing sheets having a starch-bound matrix reinforced with fibers and optionally including an inorganic mineral filler. Suitable mixtures for forming the sheets are prepared by mixing together water, unmodified and ungelatinized starch granules, a cellulosic ether, fibers, and optionally an inorganic mineral filler in the correct proportions to form a sheet having desired properties. The mixtures are formed into sheets by passing them between one or more sets of heated rollers to form green sheets. The heated rollers cause the cellulosic ether to form a skin on the outer surfaces of the sheet that prevents the starch granules from causing the sheet to adhere to the rollers upon gelation of the starch. The green sheets are passed between heated rollers to gelatinize the starch granules, and then to dry the sheet by removing a substantial portion of the water by evaporation. The starch and cellulosic ether form the binding matrix of the sheets with the fibers and optional inorganic filler dispersed throughout the binding matrix. The starch-bound sheets can be cut, rolled, pressed, scored, perforated, folded, and glued to fashion articles from the sheets much like paper or paperboard. The sheets are particularly useful in the mass production of containers, such as food and beverage containers.

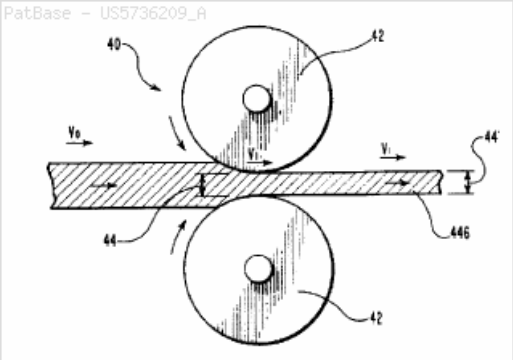

8) Family number: 33376260 (US5810961A) © PatBase

Title: METHODS FOR MANUFACTURING MOLDED SHEETS HAVING A HIGH STARCH CONTENT

Priority: US19930152354 19931119 US19930158824 19931124 US19940192965 19940207 US19960631676 19960409

Family:

Publication number	Publication date	Application number	Application date
US5810961 A	19980922	US19960631676	19960409

Probable Assignee: E KHASHOGGI IND LLC

Assignee(s):(std)**:** KHASHOGGI E IND

Assignee(s): E KHASHOGGI IND ; E KHASHOGGI IND LLC ; E KHASHOGGI INDUSTRIES LLC

Inventor(s):(std)**:** ANDERSEN PER JUST ; CHRISTENSEN BRUCE J ; HODSON SIMON K ; ONG SHAODE

Inventor(s): CHRISTIANSEN BRUCE J

International class (IPC 8-9): B05B11/00 B27N3/00 B28B1/00 B28B1/52 B28B11/00 B28B23/00 B28B3/12 B28B3/20 B29C43/00 B29C43/06 B29C43/22 B29C43/24 B29C43/34 B29C43/46 B29C44/04 B29C45/00 B29C47/00 B29C47/50 B29C47/52 B29C47/88 B29C49/00 B29C49/06 B29C51/00 B29C51/04 B29C51/10 B29C53/06 B29C55/18 B29C67/24 B29C70/50 B29C71/00 B31B17/00 B32B13/02 B32B27/04 B32B27/20 B32B37/14 B32B5/02 B32B5/18 B32B9/00 B65D43/16 B65D65/38 B65D65/46 C04B16/02 C04B26/00 C04B26/02 C04B26/28 C04B28/00 C04B40/00 C08J3/02 C08J5/18 C08L1/28 C08L3/02 C08L5/12 E05D1/02 (Advanced/Invention);
B05C5/02 B29C43/08 B29C49/04 B29C51/08 B29C53/58 B29K1/00 B29L7/00
B32B37/12 (Advanced/Non-invention);
B32B37/12 (Core/Non-invention)

International class (IPC 1-7): B28B11/06 B28B11/08 B28B11/14 C04B41/45

CPC: Y02W30/97 Y02W90/11 B05B11/0037 B05B11/30 B05C5/0245 B27N3/002 B27N3/007 B28B1/00 B28B1/52 B28B3/126 B28B3/20 B28B11/00 B28B11/003 B28B23/00 B28B23/0081 B28B23/0087 B29C43/00 B29C43/003 B29C43/08 B29C43/22 B29C43/222 B29C43/24 B29C43/34 B29C43/46 B29C44/0407 B29C45/0013 B29C49/0005 B29C49/0047 B29C49/04 B29C49/06 B29C49/063 B29C51/002 B29C51/04 B29C51/08 B29C51/082 B29C51/10 B29C53/063 B29C53/58 B29C55/18 B29C67/24 B29C67/242 B29C70/50 B29C71/0009 B29C2043/3433 B29C2043/463 B29C2791/006 B29C2795/007 B29K2001/00 B29K2003/00 B29K2005/00 B29K2089/00 B29K2105/06 B29K2105/12 B29K2105/16 B29K2995/006 B29L2024/00 B29L2031/608 B29L2031/712 B29L2031/7132 B31D1/005 B32B5/02 B32B5/18 B32B9/00 B32B13/02 B32B27/04 B32B27/20 B32B37/00 B32B37/12 B65D43/162 B65D65/38 B65D65/466 B65D2565/385 C04B26/00 C04B26/02 C04B26/28 C08J5/18 C08J2303/02 C08J2323/02 C08L1/286 C08L3/02 C08L5/12 E05D1/02 E05Y2900/602 B31B50/32 B31B2105/0022 B32B9/04 B32B3/28 B32B9/02 B32B23/04 B32B23/22 B32B37/144 B32B2307/7163 B32B2439/00 Y02A40/961 B29C48/0017 B29C48/022 B29C48/05 B29C48/08 B29C48/09 B29C48/13 B29C48/15 B29C48/38 B29C48/465 B29C48/91

European class: B05B11/00B5 B27N3/00B B27N3/00R B28B1/00 B28B1/52 B28B11/00 B28B11/00E B28B23/00 B28B23/00Z B28B23/00Z1 B28B3/12C B28B3/20 B29C43/00B B29C43/22 B29C43/22B B29C43/24 B29C43/34 B29C43/46 B29C44/04A B29C45/00E B29C47/00B B29C47/50 B29C47/52B B29C49/00B B29C49/06B2B B29C51/00B B29C51/04 B29C51/10 B29C53/06B B29C55/18 B29C67/24 B29C67/24C B29C70/50 B29C71/00C B31B1/32 B31B17/00 B31D1/00H1 B32B13/02 B32B27/04 B32B27/20 B32B37/00 B32B37/14B B32B5/02 B32B5/18 B32B9/00 B65D43/16B B65D65/38 B65D65/46C C04B26/00 C04B26/02 C04B26/28 C08J5/18 C08L1/28F C08L3/02 C08L5/12 E05D1/02 L05B11/30 L05C5/02E L29C43/00 L29C43/08 L29C43/34B L29C43/46 L29C43/46A2 L29C47/00J10 L29C47/00J5 L29C47/00J6 L29C47/00L7 L29C47/02 L29C49/00F L29C49/04 L29C49/06 L29C51/04 L29C51/08 L29C51/08B L29C51/10 L29C53/58 L29C791/00E4 L29C795/00D L29K1/00 L29K105/06 L29K105/12 L29K105/16 L29K3/00 L29K5/00 L29K89/00 L29K995/00F14B L29L24/00 L29L31/60C L29L31/712 L29L31/7132 L31B201/26A1A L31B217/08A L32B37/12 L65D565/38Y7 M08J303/02 M08J323/02

P05D1/02 P05Y900/602

US class: 156/324 264/131 264/132 264/133 264/145 264/154 264/160 264/211.11 264/282 264/286 264/295 264/42 427/393.6

Classification Explorer

Cited documents: US5620510, US5618341, US5582670, US5580624, US5569514, US5525281, US5523293, US5512378, US5512135, US5512090, US5508072, US5506277, US5506046, US5501774, US5501771, US5500089, US5496440, US5494509, US5487813, US5480923, US5476621, US5474856, US5470382, US5462980, US5456933, US5454863, US5453310, US5447604, US5436078, US5432000, US5428150, US5427614, US5419962, US5415827, US5411639, US5405564, US5405437, US5397834, US5395438, US5393804, US5393333, US5389322, US5382611, US5382285, US5378418, US5376320, US5372877, US5367067, US5362777, US5362776, US5360844, US5360828, US5360586, US5360473, US5356467, US5352709, US5346541, US5324351, US5320669, US5317119, US5317037, US5314754, US5308879, US5300333, US5298273, US5296526, US5296180, US5290350, US5288765, US5288318, US5284672, US5280055, US5279658, US5278194, US5277764, US5275774, US5273821, US5273167, US5272181, US5269845, US5268187, US5266368, US5264080, US5264030, US5262458, US5258430, US5256711, US5253743, US5252271, US5248702, US5240561, US5234978, US5224595, US5221435, US5208267, US5206087, US5201403, US5194206, US5186990, US5185382, US5178730, US5178677, US5162126, US5160368, US5153037, US5134179, US5126014, US5126013, US5124161, US5122231, US5110413, US5108807, US5108677, US5106880, US5104669, US5104487, US5103717, US5095054, US5082500, US5076985, US5071512, US5061346, US5059642, US5048403, US5043196, US5039378, US5039003 A, US5035930 A, US5032414 A, US5032413 A, US4979992 A, US4963603 A, US4957754 A, US4957558 A, US4953453 A, US4952278 A, US4950490 A, US4944595 A, US4943349 A, US4941922 A, US4927656 A, US4927655 A, US4925530 A, US4923665 A, US4921250 A, US4919758 A, US4912069 A, US4892590 A, US4889428 A, US4872913 A, US4863655 A, US4846932 A, US4833191 A, US4828650 A, US4814012 A, US4789244 A, US4781932 A, US4775580 A, US4755494 A, US4753710 A, US4749583 A, US4735811 A, US4711669 A, US4710442 A, US4710117 A, US4694741 A, US4673438 A, US4669603 A, US4655840 A, US4648314 A, US4625856 A, US4624855 A, US4623150 A, US4613627 A, US4602590 A, US4595623 A, US4588443 A, US4567049 A, US4562218 A, US4552463 A, US4550655 A, US4545854 A, US4529653 A, US4524682 A, US4511585 A, US4508595 A, US4482386 A, US4456625 A, US4454268 A, US4445970 A, US4438685 A, US4410571 A, US4394930 A, US4378271 A, US4377440 A, US4329177 A, US4328136 A, US4306059 A, US4303690 A, US4249991 A, US4243480 A, US4229225 A, US4225383 A, US4225247 A, US4210490 A, US4204337 A, US4172154 A, US4149550 A, US4133784 A, US4124550 A, US4094077 A, US4089691 A, US4086045 A, US4080213 A, US4076864 A, US4076547 A, US4070196 A, US4044166 A, US4043862 A, US4017324 A, US4014636 A, US3968004 A, US3949145 A, US3493382 A, US3406614 A, US3205116 A,

Forward Citations: WO14138659, WO14138659, WO12162469, WO12162469, WO07001110, USRE39339, US9890083, US9701583, US9579837, US9475732, US9410361, US9375899, US9302448, US9243444, US9080372, US9076428, US9027296, US8997924, US8936693, US8927622, US8915033, US8881494, US8741443, US8673192, US8658714, US8636011, US8627828, US8604123, US8591677, US8501260, US8469036, US8445101, US8440296, US8382888, US8360008, US8349444, US8298635, US8268417, US8152510, US8127720, US8087921, US7967904, US7909003, US7594619, US7553363, US7481645, US7083673, US6893527, US6878199, US6716022, US6561787, US6468133, US6340388, US6319312, US6251979, US6200404, US2016151936, US2015284911, US2014239533, US2014099447, US2011126776, US2010291822, US2010280149, US2009258172, US2009238912, US2009218347, US2008256821, US2008029045, US2007286972, US2007202228, US2007148384, US2007071899, US2007062009, US2006255507, US2006188674, US2006110498, US2005120915, US2005089606, US2005086907, US2004265453, US2003216492, US2003207038, US2003185928, US2003150556, US2003145517, US10240089, US10196309, US10098376, US10077597, EP1265957, CN103842085, CN103842085, CN102039735,

Abstract:
Compositions and methods for manufacturing sheets having a starch-bound matrix reinforced with fibers and optionally including an inorganic mineral filler. Suitable mixtures for forming the sheets are prepared by mixing together water, unmodified and ungelatinized starch granules, a cellulosic ether, fibers, and optionally an inorganic mineral filler in the correct proportions to form a sheet having desired properties. The mixtures are formed into sheets by passing them between one or more sets of heated rollers to form green sheets. The heated rollers cause the cellulosic ether to form a skin on the outer surfaces of the sheet that prevents the starch granules from causing the sheet to adhere to the rollers upon gelation of the starch. The green sheets are passed between heated rollers to gelatinize the starch granules, and then to dry the sheet by removing a substantial portion of the water by evaporation. The starch and cellulosic ether form the binding matrix of the sheets with the fibers and optional inorganic filler dispersed throughout the binding matrix. The starch-bound sheets can be cut, rolled, pressed, scored, perforated, folded, and glued to fashion articles from the sheets much like paper or paperboard. The sheets are particularly useful in the mass production of containers, such as food and beverage containers.

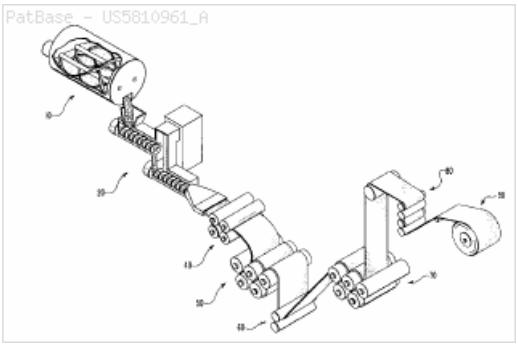

9) Family number: 33376268 (US5976235A)

© PatBase

Title: COMPOSITIONS FOR MANUFACTURING SHEETS HAVING A HIGH STARCH CONTENT

Priority: US19930152354 19931119 US19930158824 19931124 US19940192965 19940207 US19960629539 19960409 US19980018725 19980204

Family:

Publication number	Publication date	Application number	Application date
US5976235 A	19991102	US19980018725	19980204

Probable Assignee: KHASHOGGI E IND

Assignee(s):(std)**:** KHASHOGGI E IND

Assignee(s): E KHASHOGGI IND LLC ; E KHASHOGGI INDUSTRIES LLC

Inventor(s):(std)**:** ANDERSEN PER JUST ; CHRISTENSEN BRUCE J ; HODSON SIMON K ; ONG SHAODE

Inventor(s): CHRISTIANSEN BRUCE J

International class (IPC 8-9): B05B11/00 B27N3/00 B28B1/00 B28B1/52 B28B11/00 B28B23/00 B28B3/12 B28B3/20 B29C43/00 B29C43/02 B29C43/06 B29C43/08 B29C43/22 B29C43/24 B29C43/34 B29C43/36 B29C43/46 B29C44/04 B29C45/00 B29C47/00 B29C47/50 B29C47/52 B29C49/00 B29C49/06 B29C51/00 B29C51/04 B29C51/10 B29C53/06 B29C55/18 B29C67/24 B29C70/50 B29C71/00 B31B17/00 B32B13/02 B32B27/04 B32B27/20 B32B37/14 B32B5/02 B32B5/18 B32B9/00 B65D43/16 B65D65/38 B65D65/46 C04B16/02 C04B26/00 C04B26/02 C04B26/28 C04B28/00 C04B40/00 C08J5/04 C08J5/18 C08K3/00 C08L1/26 C08L1/28 C08L3/00 C08L3/02 C08L5/02 C08L5/12 C08L5/14 C08L89/06 C08L97/02 E05D1/02 (Advanced/Invention);
B05C5/02 B29C49/04 B29C51/08 B29C53/58 B32B37/12 (Advanced/Non-invention);
B32B37/12 (Core/Non-invention)

International class (IPC 1-7): C04B14/38 C08L3/02

CPC: Y10S428/906 Y10S977/707 B05B11/0037 B05B11/30 B05C5/0245 B27N3/002 B27N3/007 B28B1/00 B28B1/52 B28B3/126 B28B3/20 B28B11/00 B28B11/003 B28B23/00 B28B23/0081 B28B23/0087 B29C43/00 B29C43/003 B29C43/02 B29C43/08 B29C43/22 B29C43/222 B29C43/24 B29C43/34 B29C43/46 B29C44/0407 B29C45/0013 B29C49/0005 B29C49/0047 B29C49/04 B29C49/06 B29C49/063 B29C51/002 B29C51/04 B29C51/08 B29C51/082 B29C51/10 B29C53/063 B29C53/58 B29C55/18 B29C67/24 B29C67/242 B29C70/50 B29C71/0009 B29C2043/3433 B29C2043/463 B29C2049/4608 B29C2791/006 B29C2795/007 B29K2001/00 B29K2003/00 B29K2005/00 B29K2089/00 B29K2105/06 B29K2105/12 B29K2105/16 B29K2995/006 B29L2024/00 B29L2031/608 B29L2031/712 B29L2031/7132 B31D1/005 B32B5/02 B32B5/18 B32B9/00 B32B13/02 B32B27/04 B32B27/20 B32B37/12 B32B37/144 B65D43/162 B65D65/38 B65D65/466 B65D2565/385 C04B26/02 C04B26/28 C04B26/285 C04B40/00 C04B2111/00612 C04B2111/00948 C08J2303/02 C08J2323/02 C08L1/28 C08L1/286 C08L3/00 C08L3/02 C08L5/02 C08L5/12 C08L5/14 C08L89/06 C08L97/02 E05D1/02 E05Y2900/602 Y10T428/1372 Y10T428/1376 Y10T428/1397 Y10T428/15 Y10T428/24446 Y10T428/24694 Y10T428/249986 Y10T428/31971 Y02W30/97 Y02W90/11 B31B50/32 B31B2105/0022 B32B9/04 B32B3/266 B32B3/28 B32B9/02 B32B23/04 B32B23/22 B32B2307/518 B32B2307/716 B32B2307/7163 B32B2439/00 C08J5/18 B29C48/001 B29C48/0011 B29C48/0017 B29C48/0018 B29C48/0019 B29C48/0022 B29C48/0023 B29C48/022 B29C48/05 B29C48/07 B29C48/08 B29C48/13 B29C48/38 B29C48/465

European class: B05B11/00B5 B27N3/00B B27N3/00R B28B1/00 B28B1/52 B28B11/00 B28B11/00E B28B23/00 B28B23/00Z B28B23/00Z1 B28B3/12C B28B3/20 B29C43/00B B29C43/02 B29C43/22 B29C43/22B B29C43/24 B29C43/34 B29C43/46 B29C44/04A B29C45/00E B29C47/00B B29C47/00J5 B29C47/50 B29C47/52B B29C49/00B B29C49/06B2B B29C51/00B B29C51/04 B29C51/10 B29C53/06B B29C55/18 B29C67/24 B29C67/24C B29C70/50 B29C71/00C B31B1/32 B31B17/00 B31D1/00H1 B32B13/02 B32B27/04 B32B27/20 B32B37/14B B32B5/02 B32B5/18 B32B9/00 B65D43/16B B65D65/38 B65D65/46C C04B26/02 C04B26/28 C04B26/28B C04B40/00 C08J5/18 C08L1/28 C08L1/28F C08L3/00 C08L3/02 C08L5/02 C08L5/12 C08L5/14 C08L89/06 C08L97/02 E05D1/02 L05B11/30 L05C5/02E L29C43/00 L29C43/08 L29C43/34B L29C43/46 L29C43/46A2 L29C47/00J10 L29C47/00J4 L29C47/00J5 L29C47/00L L29C47/00L13 L29C47/00L4 L29C47/00L7 L29C47/00L8 L29C47/00L9 L29C49/00F L29C49/04 L29C49/06 L29C49/46B1A L29C51/04 L29C51/08 L29C51/08B L29C51/10 L29C53/58 L29C791/00E4 L29C795/00D L29K1/00 L29K105/06 L29K105/12 L29K105/16 L29K3/00 L29K5/00 L29K89/00 L29K995/00F14B L29L24/00 L29L31/60C L29L31/712 L29L31/7132 L31B201/26A1A L31B217/08A L32B37/12 L65D565/38Y7 M04B111/00T6 M04B111/00T66 M08J303/02 M08J323/02 P05D1/02 P05Y900/602

US class: 106/162.51 106/164.01 106/172.1 106/206.1 106/217.01 106/287.35 106/400 536/102 977/707

Classification Explorer

Cited documents: US5569514, US5525281, US5523293, US5512378, US5512135, US5512090, US5506277, US5501774, US5501771, US5500089, US5496440, US5494509, US5487813, US5480923, US5476621, US5474856, US5470382, US5462980, US5456933, US5454863, US5447604, US5436078, US5432000, US5428150, US5427614, US5419962, US5415827, US5411639, US5405564, US5405437, US5397834, US5395438, US5393804, US5393333, US5389322, US5382611, US5382285, US5380180, US5378418, US5376320, US5372877, US5367067, US5362777, US5362776, US5360844, US5360828, US5360586, US5360473, US5356467, US5352709, US5346541, US5324351, US5320669, US5317119, US5317037, US5314754, US5308879, US5300333, US5298273, US5296526, US5296180, US5290350, US5288765, US5288318, US5284672, US5280055, US5279658, US5278194, US5277764, US5275774, US5273821, US5273167, US5272181, US5269845, US5268187, US5266368, US5264080, US5264030, US5262458, US5258430, US5256711, US5252271, US5248702, US5240561, US5234978, US5224595, US5221435, US5208267, US5206087, US5201403, US5194206, US5186990, US5185382, US5178730, US5162126, US5160368, US5153037, US5134179, US5126014 A, US5126013 A, US5124161 A, US5122231 A, US5110413 A, US5108807 A, US5108677 A, US5106880 A, US5104669 A, US5104487 A, US5095054 A, US5082500 A, US5076985 A, US5071512 A, US5061346 A, US5059642 A, US5043196 A, US5039378 A, US5039003 A, US5035930 A, US4979992 A, US4963603 A, US4957754 A, US4957558 A, US4953453 A, US4952278 A, US4950490 A, US4944595 A, US4943349 A, US4941922 A, US4927656 A, US4927655 A, US4925530 A, US4923665 A, US4921250 A, US4919758 A, US4912069 A, US4892590 A, US4872913 A, US4863655 A, US4846932 A, US4833191 A, US4828650 A, US4814012 A, US4789244 A, US4781932 A, US4775580 A, US4755494 A, US4753710 A, US4749583 A, US4735811 A, US4711669 A, US4710442 A, US4673438 A, US4655840 A, US4624855 A, US4623150 A, US4613627 A, US4595623 A, US4588443 A, US4562218 A, US4545854 A, US4529653 A, US4524682 A, US4511585 A, US4508595 A, US4482386 A, US4456625 A, US4454268 A, US4445970 A, US4438685 A, US4410571 A, US4394930 A, US4378271 A, US4377440 A, US4329177 A, US4328136 A, US4306059 A, US4303690 A, US4249991 A, US4229225 A, US4225383 A, US4225247 A, US4210490 A, US4204337 A, US4172154 A, US4149550 A, US4133784 A, US4124550 A, US4094077 A, US4089691 A, US4080213 A, US4076547 A, US4070196 A, US4044166 A, US4043862 A, US4017324 A, US3968004 A, US3949145 A, US3493382 A,

Forward Citations: US9890083, US9701583, US9475732, US9410361, US9375899, US9243444, US9080372, US9027296, US8927622, US8915033, US8881494, US8673398, US8658714, US8608018, US8604123, US8541074, US8501260, US8382888, US8360008, US8349443, US8268417, US8152510, US8127720, US8087921, US7989524, US7909003, US7803296, US7582340, US7553363, US7481645, US7235256, US7175702, US7026390, US2015297004, US2014021651, US2011210164, US2011126776, US2008303191, US2008268158, US2008230001, US2008202415, US2008029045, US2007237913, US2007202228, US2006154007, US2006110498, US2005147695, US2005089606, US2004265453, US2004091581, US10240089, US10196309, US10077597,

Abstract:
Compositions and methods for manufacturing sheets having a starch-bound matrix reinforced with fibers and optionally including an inorganic mineral filler. Suitable mixtures for forming the sheets are prepared by mixing together water, unmodified and ungelatinized starch granules, a cellulosic ether, fibers, and optionally an inorganic mineral filler in the correct proportions to form a sheet having desired properties. The mixtures are formed into sheets by passing them between one or more sets of heated rollers to form green sheets. The heated rollers cause the cellulosic ether to form a skin on the outer surfaces of the sheet that prevents the starch granules from causing the sheet to adhere to the rollers upon gelation of the starch. The green sheets are passed between heated rollers to gelatinize the starch granules, and then to dry the sheet by removing a substantial portion of the water by evaporation. The starch and cellulosic ether form the binding matrix of the sheets with the fibers and optional inorganic filler dispersed throughout the binding matrix. The starch-bound sheets can be cut, rolled, pressed, scored, perforated, folded, and glued to fashion articles from the sheets much like paper or paperboard. The sheets are particularly useful in the mass production of containers, such as food and beverage containers.

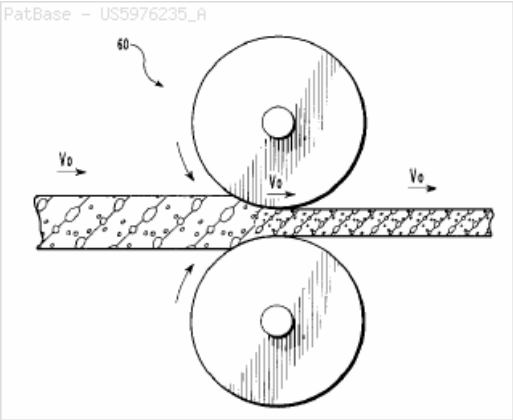

10) Family number: 33376269 (US6030673A)

© PatBase

Title: MOLDED STARCH-BOUND CONTAINERS AND OTHER ARTICLES HAVING NATURAL AND/OR SYNTHETIC POLYMER COATINGS

Priority: US19920982383 19921125 US19930095662 19930721 US19930109100 19930818 US19940218971 19940325 US19940288664 19940809 US19940288667 19940809 US19960691861 19960802 US19990246163 19990208

Family:

Publication number	Publication date	Application number	Application date
US6030673 A	20000229	US19990246163	19990208

Probable Assignee: EARTHSHELL SPE LLC

Assignee(s):(std)**:** KHASHOGGI E IND

Assignee(s): E KHASHOGGI IND LLC ; E KHASHOGGI INDUSTRIES LLC ; EARTHSHELL SPE LLC

Inventor(s):(std)**:** ANDERSEN PER JUST ; HODSON SIMON K

International class (IPC 8-9): A61K47/36 B01F3/12 B27N3/00 B28B1/00 B28B1/52 B28B11/00 B28B11/24 B28B13/02 B28B13/06 B28B23/00 B28B3/00 B28B3/02 B28B3/12 B28B3/20 B28B3/26 B28B7/42 B28C7/02 B29B9/12 B29C31/04 B29C33/02 B29C33/10 B29C33/36 B29C33/58 B29C39/00 B29C39/42 B29C43/00 B29C43/02 B29C43/06 B29C43/08 B29C43/22 B29C43/24 B29C43/34 B29C43/36 B29C43/38 B29C43/46 B29C44/04 B29C45/00 B29C49/00 B29C51/00 B29C51/04 B29C51/10 B29C53/06 B29C55/18 B29C67/20 B29C67/24 B29C70/02 B29C70/12 B29C70/50 B29C71/00 B31B17/00 B32B13/02 B32B27/04 B32B27/20 B32B37/14 B32B5/02 B32B5/14 B32B5/18 B65D1/00 B65D43/16 B65D5/00 B65D65/38 B65D65/40 B65D65/46 C04B14/06 C04B14/38 C04B16/02 C04B20/00 C04B22/00 C04B22/04 C04B24/00 C04B24/14 C04B24/38 C04B26/00 C04B26/02 C04B26/28 C04B28/00 C04B28/02 C04B32/00 C04B38/00 C04B40/00 C04B40/06 C04B41/45 C04B41/61 C04B7/36 C04B7/52 C08J3/20 C08J9/00 C08J9/12 C08K7/02 C08L1/28 C08L101/00 C08L29/04 C08L3/00 C08L3/02 C08L31/04 C08L33/02 C08L5/02 C08L5/12 C08L5/14 C08L61/28 C08L89/06 C08L97/02 E05D1/02 (Advanced/Invention);
B05B11/00 B05C1/08 B05C3/18 B05C5/02 B29C53/58 B32B37/12 (Advanced/Non-invention)

International class (IPC 1-7): B32B3/26 B32B31/06 B32B31/12

CPC: Y10S428/913 B01F3/1214 B01F2003/125 B05B11/0037 B05B11/30 B05C1/0826 B05C1/0834 B05C3/18 B05C5/0245 B27N3/002 B27N3/007 B28B1/00 B28B1/52 B28B3/00 B28B3/02 B28B3/126 B28B3/20 B28B3/2645 B28B7/42 B28B11/00 B28B11/003 B28B11/008 B28B11/24 B28B11/245 B28B13/021 B28B13/06 B28B23/00 B28B23/0081 B28B23/0087 B28C7/02 B29C33/10 B29C33/20 B29C33/36 B29C39/003 B29C39/42 B29C43/00 B29C43/003 B29C43/02 B29C43/06 B29C43/08 B29C43/34 B29C43/36 B29C43/38 B29C44/0407 B29C45/0013 B29C49/0005 B29C51/002 B29C51/04 B29C51/10 B29C53/063 B29C53/58 B29C55/18 B29C67/202 B29C67/24 B29C67/242 B29C70/025 B29C70/12 B29C70/50 B29C71/0009 B29C2043/3433 B29C2043/3615 B29C2043/3621 B29C2043/3623 B29C2043/3689 B29C2043/5841 B29C2049/4608 B29C2795/007 B29K2003/00 B29K2005/00 B29K2089/00 B29K2093/00 B29K2105/12 B29K2105/16 B29L2024/00 B29L2031/608 B29L2031/712 B29L2031/7132 B31D1/005 B32B5/02 B32B13/02 B32B27/04 B32B27/20 B32B37/12 B32B37/144 B65D5/00 B65D11/02 B65D43/162 B65D65/38 B65D65/466 B65D2301/20 B65D2565/385 C04B7/527 C04B14/064 C04B16/02 C04B20/002 C04B20/0048 C04B22/002 C04B22/04 C04B24/00 C04B24/14 C04B24/38 C04B26/00 C04B26/02 C04B26/026 C04B26/28 C04B26/285 C04B28/00 C04B28/02 C04B38/0006 C04B40/00 C04B40/0032 C04B40/006 C04B40/0616 C04B41/45 C04B41/61 C08J9/12 C08J2303/00 C08L1/28 C08L1/286 C08L3/00 C08L3/02 C08L5/02 C08L5/12 C08L5/14 C08L89/06 C08L97/02 E05D1/02 E05Y2900/602 Y10T428/1348 Y10T428/1372 Y10T428/1376 Y10T428/24992 Y10T428/249961 Y10T428/249983 Y10T428/249986 Y10T428/249989 Y10T428/24999 Y10T428/249991 Y10T428/249992 Y02W30/97 Y02W90/11 B29C44/3402 B31B50/32 B31B2105/0022 B32B5/18 B32B1/02 B32B5/14 B32B2262/062 B32B2305/08 B32B2305/30 B32B2305/70 B32B2307/7246 B32B2317/20 B32B2439/70 C08J9/0085 Y02A40/961 B29C48/0011 B29C48/0017 B29C48/03 B29C48/15

European class: B01F3/12B2 B27N3/00B B27N3/00R B28B1/00 B28B1/52 B28B11/00 B28B11/00E B28B11/00E3 B28B11/24 B28B11/24D B28B13/02C B28B13/06 B28B23/00 B28B23/00Z B28B23/00Z1 B28B3/00 B28B3/02 B28B3/12C B28B3/20 B28B3/26E B28B7/42 B28C7/02 B29C33/36 B29C39/00B B29C39/42 B29C43/00B B29C43/02 B29C43/06 B29C43/08 B29C43/34 B29C43/36 B29C43/38 B29C44/04A B29C45/00E B29C49/00B B29C51/00B B29C51/04 B29C51/10 B29C53/06B B29C55/18 B29C67/20C B29C67/22D1 B29C67/24 B29C67/24C B29C70/02A4 B29C70/12 B29C70/50 B29C71/00C B31B1/32 B31B17/00 B31D1/00H1 B32B13/02 B32B27/04 B32B27/20 B32B37/14B B32B5/02 B32B5/14 B32B5/18 B65D11/02 B65D43/16B B65D5/00 B65D65/38 B65D65/46C C04B14/06G C04B16/02 C04B20/00D2 C04B20/00F C04B22/00H C04B22/04 C04B24/00 C04B24/14 C04B24/38 C04B26/00 C04B26/02 C04B26/02B C04B26/28 C04B26/28B C04B28/00 C04B28/02 C04B38/00B C04B40/00 C04B40/00D1 C04B40/00D7 C04B40/06A2 C04B41/45 C04B41/61 C04B7/52H C08J9/00N C08J9/12 C08L1/28 C08L1/28F C08L3/00 C08L3/02 C08L5/02 C08L5/12 C08L5/14 C08L89/06 C08L97/02 E05D1/02 L01F3/12G L05B11/00B5 L05B11/30 L05C1/08P L05C1/08P2 L05C3/18 L05C5/02E L29C33/10 L29C33/20 L29C43/00 L29C43/06 L29C43/08 L29C43/34B L29C43/36C2 L29C43/36C2B L29C43/36C2B1 L29C43/36H2 L29C43/58D1 L29C47/00L4 L29C47/00L7 L29C47/02 L29C49/46B1A L29C53/58 L29C795/00D L29K105/12 L29K105/16 L29K3/00 L29K5/00 L29K89/00 L29K93/00 L29L24/00 L29L31/60C L29L31/712 L29L31/7132 L31B201/26A1A L31B217/08A L32B37/12 L65D301/20 L65D565/38Y7 M08J303/00 P05D1/02 P05Y900/602

US class: 156/78 206/524.3 206/524.7 427/316 427/399 428/317.3 428/317.9 428/318.8 428/319.1 428/319.3 428/319.7 428/36.4 428/36.5 428/913

Classification Explorer

Cited documents: WO9630186, WO9418388, WO9418384, WO9301242, WO9300399, WO9204408, WO9112186, WO8902225, WO8700828, US5849152, US5844023, US5843544, US5830548, US5749954, US5711908, US5705536, US5683772, US5663216, US5660900, US5589518, US5576049, US5569692, US5569514, US5531150, US5525281, US5523293, US5512378, US5512090, US5506277, US5500089, US5480923, US5476621, US5462982, US5462980, US5412005, US5411639, US5405564, US5397834, US5393804, US5389322, US5382611, US5382285, US5376320, US5372877, US5367320, US5367067, US5362777, US5362776, US5360844, US5360830, US5360828, US5360586, US5360473, US5346541, US5320669, US5317119, US5317037, US5314754, US5310070, US5308879, US5300333, US5298273, US5296526, US5292782, US5290350, US5288765, US5288318, US5286770, US5284672, US5280055, US5279658, US5278194, US5277764, US5275774, US5273821, US5273167, US5272181, US5269845, US5268187, US5266368, US5264080, US5264030, US5262030, US5258430, US5256711, US5253743, US5252271, US5248702, US5242078, US5240561, US5234978, US5234977, US5224595, US5221435, US5208267, US5206087, US5201403, US5194206, US5186990, US5185382, US5178730, US5178677, US5162126, US5160676, US5160368, US5156718, US5153037, US5141797, US5134179, US5132155, US5126014, US5126013, US5122231, US5115000, US5110838, US5110525, US5110413, US5108807, US5108677, US5106880, US5104669, US5104487, US5103717, US5095054, US5082500, US5076985, US5071512, US5061346, US5059642, US5048403, US5043196, US5039378, US5039003, US5035930, US5032414, US5032413, US4979992 A, US4963603 A, US4957754 A, US4957558 A, US4953453 A, US4952278 A, US4944595 A, US4943349 A, US4941922 A, US4927656 A, US4927655 A, US4925530 A, US4923665 A, US4921250 A, US4919758 A, US4912069 A, US4892590 A, US4889428 A, US4872913 A, US4863655 A, US4846932 A, US4833191 A, US4828650 A, US4814012 A, US4789244 A, US4775580 A, US4755494 A, US4753710 A, US4749583 A, US4711669 A, US4710422 A, US4710117 A, US4694741 A, US4673438 A, US4669603 A, US4655840 A, US4648314 A, US4625856 A, US4624855 A, US4623150 A, US4613627 A, US4602590 A, US4595623 A, US4588443 A, US4567049 A, US4562218 A, US4552463 A, US4550655 A, US4545854 A, US4529663 A, US4529662 A, US4529653 A, US4524682 A, US4508595 A, US4482386 A, US4462835 A, US4454268 A, US4445970 A, US4438685 A, US4410571 A, US4394930 A, US4378271 A, US4377440 A, US4329177 A, US4328136 A, US4306059 A, US4303690 A, US4249991 A, US4248664 A, US4230502 A, US4225383 A, US4225247 A, US4210490 A, US4204337 A, US4172154 A, US4149550 A, US4133784 A, US4124550 A, US4094077 A, US4089691 A, US4080213 A, US4076846 A, US4070196 A, US4044166 A, US4043862 A, US4017324 A, US3968004 A, US3962155 A, US3949145 A, US3921333 A, US3914359 A, US3867324 A, US3850863 A, US3759729 A, US3493382 A, US3117014 A, US3052595 A, US3042578 A, US2968561 A, US2432971 A, NL9100590, JP63232636, JP6135487, JP6032386, JP5320401, JP5246417, JP5171049, JP5105815, JP3263441, JP32386, GB2214516, GB2208651, GB2050459, GB1584387, FR6390, FR2642731, FR1278195, EP0609982, EP0608031, EP0587078, EP0556774, EP0551954, EP0546956, EP0539541, EP0535944, EP0525245, EP0524920, EP0453980, EP0447797, EP0444880, EP0409782, EP0409781, EP0408503, EP0408502, EP0407350, EP0405146, EP0400532, EP0370913, EP0340707, EP0327505, EP0304401, EP0271853, EP0265745, EP0118240, EP0032802, DE4008862, DE3420195, DE3346970,

Forward Citations: WO11116051, WO09053720, WO03078267, WO03072640, WO03072640, WO03051738, USRE39339, US9890083, US9878464, US9840066, US9828441, US9802866, US9701583, US9598600, US9540810, US9475732, US9410361, US9375899, US9314938, US9266778, US9243444, US9080372, US9062190, US9027296, US8927622, US8915033, US8911843, US8881494, US8691340, US8658714, US8636011, US8627828, US8604123, US8507581, US8501260, US8469036, US8382888, US8360008, US8268417, US8268391, US8152510, US8127720, US8087921, US8043539, US7931949, US7909003, US7745011, US7553363, US7503430, US7481645, US7235256, US7210823, US6713624, US6652932, US6359040, US2015086803, US2012133243, US2011227254, US2011126776, US2010280149, US2010233468, US2010129643, US2009238912, US2009218347, US2009133704, US2009133703, US2008138458, US2008070026, US2008060871, US2008029045, US2007208125, US2007202228, US2007092712, US2007071918, US2007048357, US2007020315, US2006191548, US2006189238, US2006110498, US2006068661, US2005244521, US2005230864, US2005215146, US2005147695, US2005136765, US2005107231, US2005102897, US2005089606, US2004085772, US2004071968, US2004028901, US2004024102, US10240089, US10196309, US10098376, US10077597, ITMO20090097, EP2243612, EP2184308, EP1631613, EP1621312, EP1621312, EP1491313, EP1491313, EP1456094, EP1456094,

Abstract:
Compositions, methods, and systems for manufacturing articles, particularly containers and packaging materials, having a particle packed, highly inorganically filled, cellular matrix are disclosed. Suitable inorganically filled mixtures are prepared by mixing together a starch-based binder, a solvent, inorganic aggregates, and optimal admixtures, e.g., fibers, mold-releasing agents, rheology-modifying agents, plasticizers, coating materials, and dispersants, in the correct proportions to form an article which has the desired performance criteria. The inorganically filled mixtures have a predetermined viscosity and are heated between molds at an elevated temperature and pressure to produce form-stable articles having a desired shape and a selectively controlled cellular, structure matrix. The molded articles may be placed in a high humidity chamber to obtain the necessary flexibility for their intended use. The articles may be manufactured to have properties substantially similar to articles presently made from conventional materials like paper, paperboard, polystyrene, plastic, or other organic materials. They have especial utility in the mass-production of containers, particularly food and beverage containers.

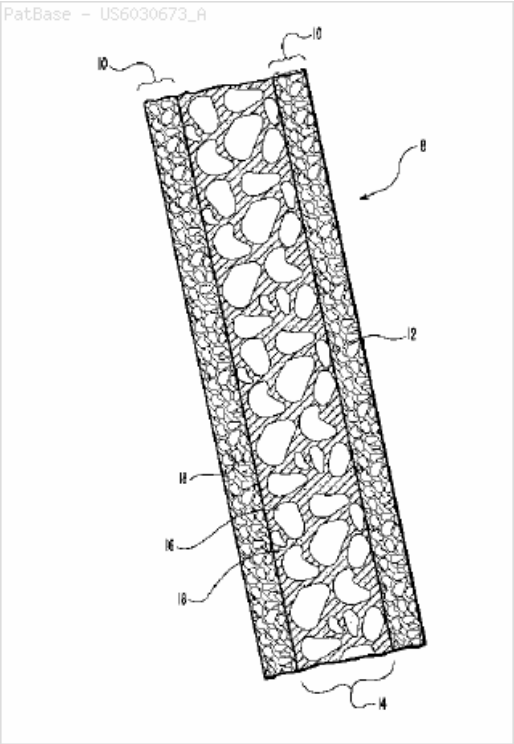

11) Family number: 33376270 (US6083586A)

© PatBase

Title: SHEETS HAVING A STARCH-BASED BINDING MATRIX

Priority: US19930152354 19931119 US19930158824 19931124 US19940192965 19940207 US19960629539 19960409 US19980019907 19980206

Family:

Publication number	Publication date	Application number	Application date
US6083586 A	20000704	US19980019907	19980206

Probable Assignee: E KHASHOGGI INDUSTRISE LLC

Assignee(s):(std)**:** KHASHOGGI E IND

Assignee(s): E KHASHOGGI IND LLC ; E KHASHOGGI INDUSTRIES LLC ; E KHASHOGGI INDUSTRISE LLC

Inventor(s):(std)**:** ANDERSEN PER JUST ; CHRISTENSEN BRUCE J ; HODSON SIMON K ; ONG SHAODE

International class (IPC 8-9): B05B11/00 B28B1/00 B28B1/52 B28B11/00 B28B23/00 B28B3/12 B28B3/20 B29C43/00 B29C43/02 B29C43/06 B29C43/08 B29C43/22 B29C43/24 B29C43/34 B29C43/36 B29C43/46 B29C49/00 B29C49/06 B29C51/00 B29C53/06 B29C55/18 B29C67/24 B29C70/50 B29C71/00 B31B17/00 B32B13/02 B32B27/04 B32B27/20 B32B5/02 B32B9/00 B65D43/16 B65D65/38 B65D65/46 C04B26/02 C04B26/28 C04B40/00 C08J5/18 C08L1/28 C08L3/00 C08L3/02 C08L5/02 C08L5/12 C08L5/14 C08L89/06 C08L97/02 (Advanced/Invention);
B05C5/02 B29C49/04 B29C51/04 B29C51/08 B29C51/10 B29C53/58 B32B37/12 E05D1/02 (Advanced/Non-invention);
B05B11/00 B28B1/00 B28B1/52 B28B11/00 B28B23/00 B28B3/00 B28B3/20 B29C43/00 B29C43/02 B29C43/04 B29C43/22 B29C43/24 B29C43/34 B29C43/36 B29C43/44 B29C49/00 B29C49/06 B29C51/00 B29C53/00 B29C55/18 B29C67/24 B29C70/04 B29C71/00 B31B17/00 B32B13/00 B32B27/04 B32B27/20 B32B5/02 B32B9/00 B65D43/16 B65D65/38 B65D65/46 C04B26/00 C04B40/00 C08J5/18 C08L1/00 C08L3/00 C08L5/00 C08L89/00 C08L97/00 (Core/Invention);
B05C5/02 B29C49/04 B29C51/08 B29C51/10 B32B37/12 E05D1/00 (Core/Non-invention)

International class (IPC 1-7): B32B5/16

CPC: Y10S428/906 B29C43/34 B05C5/0245 B28B1/00 B28B1/52 B28B3/126 B28B3/20 B28B11/00 B28B11/003 B28B23/00 B28B23/0081 B28B23/0087 B29C43/00 B29C43/003 B29C43/02 B29C43/08 B29C43/22 B29C43/24 B29C43/46 B29C49/0005 B29C49/0047 B29C49/04 B29C49/06 B29C49/063 B29C51/002 B29C51/04 B29C51/08 B29C51/082 B29C51/10 B29C53/063 B29C53/58 B29C55/18 B29C67/24 B29C67/242 B29C70/50 B29C71/0009 B29C2043/3433 B29C2043/463 B29C2049/4608 B29C2791/006 B29C2795/007 B29K2003/00 B29K2005/00 B29L2031/712 B29L2031/7132 B31D1/005 B32B5/02 B32B9/00 B32B13/02 B32B27/04 B32B27/20 B32B37/12 B65D43/162 B65D65/38 B65D65/466 B65D2565/385 C04B26/02 C04B40/00 C04B2111/00612 C04B2111/00948 C08J5/18 C08J2323/02 C08L1/28 C08L1/286 C08L3/00 C08L3/02 C08L5/02 C08L5/12 C08L5/14 C08L89/06 C08L97/02 E05D1/02 E05Y2900/602 Y10T428/1372 Y10T428/1376 Y10T428/31971 Y02W90/11 B05B11/0037 Y10T428/249986 B31B50/32 B31B2105/0022 C04B26/28 B29C48/0017 B29C48/0019 B29C48/0022 B29C48/07 B29C48/08 B29C48/15

European class: B05B11/00B5 B28B1/00 B28B1/52 B28B11/00 B28B11/00E B28B23/00 B28B23/00Z B28B23/00Z1 B28B3/12C B28B3/20 B29C43/00B B29C43/02 B29C43/22 B29C43/24 B29C43/34 B29C49/00B B29C49/06B2B B29C51/00B B29C53/06B B29C55/18 B29C67/24 B29C67/24C B29C70/50 B29C71/00C B31B1/32 B31B17/00 B31D1/00H1 B32B13/02 B32B27/04 B32B27/20 B32B5/02 B32B9/00 B65D43/16B B65D65/38 B65D65/46C C04B26/02 C04B26/28B C04B40/00 C08J5/18 C08L1/28 C08L1/28F C08L3/00 C08L3/02 C08L5/02 C08L5/12 C08L5/14 C08L89/06 C08L97/02 L05B11/30 L05C5/02E L29C43/00 L29C43/08 L29C43/34B L29C43/46 L29C43/46A2 L29C47/00J4 L29C47/00J5 L29C47/00L12 L29C47/00L7 L29C47/00L9 L29C47/02 L29C49/00F L29C49/04 L29C49/06 L29C49/46B1A L29C51/04 L29C51/08 L29C51/08B L29C51/10 L29C53/58 L29C791/00E4 L29C795/00D L29K3/00 L29K5/00 L29L31/712 L29L31/7132 L31B201/26A1A L31B217/08A L32B37/12 L65D565/38Y7 M04B111/00T6 M04B111/00T66 M08J323/02 P05D1/02 P05Y900/602

US class: 106/206.1 106/217.01 106/400 206/524.3 206/524.7 428/317.9 428/36.4 428/36.5 428/532 428/906

Classification Explorer

Cited documents: WO9418388, WO9418384, WO9403543, WO9322048, WO9301242, WO9204408, WO9112186, WO9010671, WO8902225, WO8700828, US5928741, US5851634, US5830548, US5738921, US5736209, US5705239, US5705238, US5702787, US5691014, US5665442, US5660904, US5660903, US5631053, US5569514, US5545450, US5525281, US5523293, US5512378, US5512135, US5512090, US5508072, US5506277, US5506046, US5501774, US5501771, US5500089, US5496440, US5494509, US5487813, US5480923, US5476621, US5474856, US5470382, US5462980, US5456933, US5454863, US5447604, US5436078, US5432000, US5428150, US5427614, US5419962, US5415827, US5411639, US5405564, US5405437, US5397834, US5395438, US5393804, US5393333, US5389322, US5382611, US5382285, US5380180, US5378418, US5376320, US5372877, US5367067, US5362777, US5362776, US5360844, US5360828, US5360586, US5360473, US5356467, US5352709, US5346541, US5324351, US5320669, US5317119, US5317037, US5314754, US5308879, US5300333, US5298273, US5296526, US5296180, US5290350, US5288765, US5288318, US5284672, US5280055, US5279658, US5278194, US5277764, US5275774, US5273821, US5273167, US5272181, US5269845, US5268187, US5266368, US5264080, US5264030, US5262458, US5258430, US5256711, US5252271, US5248702, US5240561, US5234978, US5224595, US5221435, US5208267, US5206087, US5201403, US5194206, US5186990, US5185382, US5178730, US5162126, US5160368, US5153037, US5134179, US5126014 A, US5126013 A, US5124161 A, US5122231 A, US5110413 A, US5108807 A, US5108677 A, US5106880 A, US5104669 A, US5104487 A, US5095054 A, US5082500 A, US5076985 A, US5071512 A, US5061346 A, US5059642 A, US5043196 A, US5039378 A, US5039003 A, US5035930 A, US4979992 A, US4963603 A, US4957754 A, US4957558 A, US4953453 A, US4952278 A, US4950490 A, US4944595 A, US4943349 A, US4941922 A, US4927656 A, US4927655 A, US4925530 A, US4923665 A, US4921250 A, US4919758 A, US4912069 A, US4892590 A, US4872913 A, US4863655 A, US4846932 A, US4833191 A, US4828650 A, US4814012 A, US4789244 A, US4781932 A, US4775580 A, US4755494 A, US4753710 A, US4749583 A, US4735811 A, US4711669 A, US4710442 A, US4673438 A, US4655840 A, US4624855 A, US4623150 A, US4613627 A, US4595623 A, US4588443 A, US4562218 A, US4545854 A, US4529653 A, US4524682 A, US4511585 A, US4508595 A, US4482386 A, US4456625 A, US4454268 A, US4445970 A, US4438685 A, US4410571 A, US4394930 A, US4378271 A, US4377440 A, US4329177 A, US4328136 A, US4306059 A, US4303690 A, US4249991 A, US4229225 A, US4225383 A, US4225247 A, US4210490 A, US4204337 A, US4172154 A, US4149550 A, US4133784 A, US4124550 A, US4094077 A, US4089691 A, US4080213 A, US4076547 A, US4070196 A, US4044166 A, US4043862 A, US4017324 A, US3968004 A, US3949145 A, US3493382 A, NE9100590, JP63022636, JP6192577, JP6135487, JP60235624, JP60035052, JP60032386, JP5246417, JP5230401, JP5171049, JP51073143, JP5105815, JP4185468, GB2214516, GB2208651, GB2050459, GB1584387, FR2642731, FR1278195, EP0609983, EP0608031, EP0556774, EP0551954, EP0546956, EP0453980, EP0447797, EP0405146, EP0370913, EP0304401, EP0271853, EP0265745, EP0118240, EP0006390, DE4008862, DE3420195, DE3346970,

Forward Citations: WO17157525, WO10085569, USRE39339, US9890083, US9802871, US9701583, US9475732, US9410361, US9375899, US9243444, US9187288, US9178077, US9080372, US9027296, US8927622, US8915033, US8911843, US8881494, US8673398, US8658714, US8636011, US8627828, US8608018, US8604123, US8541074, US8506978, US8501260, US8469036, US8382888, US8360008, US8349443, US8268417, US8177066, US8152510, US8127720, US8087921, US7909003, US7553363, US7481645, US7107703, US6234342, US2018244448, US2014283447, US2012056352, US2011210164, US2011126776, US2011024321, US2010326875, US2010280149, US2010237069, US2010155004, US2009238912, US2009218347, US2008268158, US2008256821, US2008230001, US2008029045, US2007202228, US2006110498, US2005155731, US2005089606, US2004265453, US2004091581, US2003205836, US10246236, US10240089, US10196309, US10131072, US10098376, US10077597, EP1792932, EP1777065, CN106364129, CN106364129, CN106221257, CN106221256, CN106221255, CN106221254, CN106046837, CN106046836, CN106046835, CN106009752, CN105968866, CN105968865, CN105968864, CN103289428, CN103099305, CN102348772, BE1025132,

Abstract:
Compositions and methods for manufacturing sheets having a starch-bound matrix, optionally reinforced with fibers and optionally including an inorganic mineral filler. Suitable mixtures for forming the sheets are prepared by mixing together water, unmodified and ungelatinized starch granules, a cellulosic ether, optionally fibers, and optionally an inorganic mineral filler in the correct proportions to form a sheet having desired properties. The mixtures are formed into sheets by passing them between one or more sets of heated rollers to form green sheets. The heated rollers cause the cellulosic ether to form a skin on the outer surfaces of the sheet that prevents the starch granules from causing the sheet to adhere to the rollers upon gelation of the starch. The green sheets are passed between heated rollers to gelatinize the starch granules, and then to dry the sheet by removing a substantial portion of the water by evaporation. The starch and cellulosic ether form the binding matrix of the sheets with the fibers and optional inorganic filler dispersed throughout the binding matrix. The starch-bound sheets can be cut, rolled, pressed, scored, perforated, folded, and glued to fashion articles from the sheets much like paper or paperboard. The sheets are particularly useful in the mass production of containers, such as food and beverage containers.

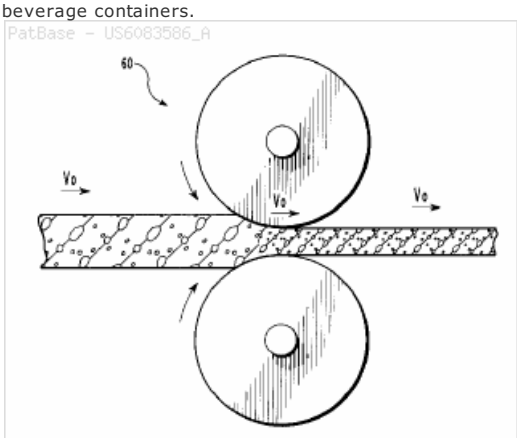

12) Family number: 33376272 (US6168857B) © PatBase

Title: COMPOSITIONS AND METHODS FOR MANUFACTURING STARCH-BASED COMPOSITIONS

Priority: US19960629539 19960409 US19980018725 19980204 US19980019907 19980206 US19980183895 19981030

Family:

Publication number	Publication date	Application number	Application date
US6168857 BA	20010102	US19980183895	19981030

Probable Assignee: E KHASHOGGI IND LLC

Assignee(s):(std)**:** KHASHOGGI E IND

Assignee(s): E KHASHOGGI IND ; E KHASHOGGI IND LLC ; E KHASHOGGI INDUSTRIES LLC

Inventor(s):(std)**:** ANDERSEN PER JUST ; CHRISTENSEN BRUCE J ; HODSON SIMON K ; ONG SHAODE

International class (IPC 8-9): B05B11/00 B28B1/00 B28B1/52 B28B11/00 B28B23/00 B28B3/12 B28B3/20 B29C43/00 B29C43/02 B29C43/22 B29C43/24 B29C45/00 B29C49/00 B29C51/00 B29C55/18 B29C67/24 B29C71/00 B32B13/02 B32B23/12 B32B27/04 B32B27/20 B32B5/02 B32B9/00 B65D43/16 C04B26/28 C08J5/18 C08L3/02 (Advanced/Invention)

International class (IPC 1-7): B32B23/12 B32B5/02

CPC: Y10S428/906 C08J5/18 B28B1/00 B28B1/52 B28B3/126 B28B3/20 B28B11/00 B28B11/003 B28B23/0081 B29C43/003 B29C43/02 B29C43/22 B29C43/222 B29C43/24 B29C45/0013 B29C49/0005 B29C51/002 B29C55/18 B29C67/242 B29C71/0009 B29K2003/00 B32B5/02 B32B9/00 B32B13/02 B32B23/12 B32B27/04 B32B27/20 B65D43/162 B65D2565/385 C04B26/285 C04B2111/00612 C04B2111/00948 C08J2303/02 C08J2323/02 C08L3/02 Y10T428/24994 Y10T428/24995 Y10T428/31971 Y02W90/11 B05B11/0037 Y10T428/249924

European class: B05B11/00B5 B28B1/00 B28B1/52 B28B11/00 B28B11/00E B28B23/00Z B28B3/12C B28B3/20 B29C43/00B B29C43/02 B29C43/22 B29C43/22B B29C43/24 B29C45/00E B29C49/00B B29C51/00B B29C55/18 B29C67/24C B29C71/00C B32B13/02 B32B23/12 B32B27/04 B32B27/20 B32B5/02 B32B9/00 B65D43/16B C04B26/28B C08J5/18 C08L3/02 L29K3/00 L65D565/38Y7 M04B111/00T6 M04B111/00T66 M08J303/02 M08J323/02

US class: 428/220 428/292.1 428/297.4 428/300.7 428/532 428/906

Classification Explorer

Cited documents: WO9418388, WO9418384, WO9403543, WO9322048, WO9301242, WO9204408, WO9112186, WO9010671, WO8902225, WO8700828, US5928741 A, US5851634 A, US5844023, US5830548 A, US5738921 A, US5736209 A, US5705536, US5705242 A, US5705239 A, US5705238 A, US5702787 A, US5691014 A, US5665442 A, US5663216, US5660904 A, US5660903 A, US5631053 A, US5589518, US5580624 A, US5569692, US5569514, US5545450 A, US5534150, US5525281, US5523293, US5512378, US5512135, US5512090, US5508072 A, US5506277, US5506046 A, US5501774, US5501771, US5500089, US5496440, US5494509, US5487813, US5480923, US5476621, US5474856, US5470382, US5462982, US5462980, US5456933, US5454863, US5447604, US5436078, US5432000, US5428150, US5427614, US5419962, US5415827, US5412005, US5411639, US5405564, US5405437, US5397834, US5395438, US5393804, US5393333, US5389322, US5382611, US5382285, US5380180, US5378418, US5376320, US5372877, US5367067, US5362777, US5362776, US5360844, US5360830, US5360828, US5360586, US5360473, US5356467, US5352709, US5346541, US5324351, US5320669, US5317119, US5317037, US5314934, US5314754, US5308879, US5300333, US5298273, US5296526, US5296180, US5292782, US5290350, US5288765, US5288318, US5286770, US5284672, US5280055, US5279658, US5278194, US5277764, US5275774, US5273821, US5273167, US5272181, US5269845, US5268187, US5266368, US5264080, US5264030, US5262458, US5258430, US5256711, US5252271, US5248702, US5240561, US5234978, US5234977, US5224595, US5221435, US5208267, US5206087, US5201403, US5194206, US5186990, US5185382, US5178730, US5162126, US5160368, US5153037, US5134179, US5126014 A, US5126013 A, US5124161 A, US5122231 A, US5110413 A, US5108807 A, US5108677 A, US5106880 A, US5104669 A, US5104487 A, US5095054 A, US5082500 A, US5076985 A, US5071512 A, US5061346 A, US5059642 A, US5043196 A, US5039378 A, US5039003 A, US5035930 A, US4979992 A, US4963603 A, US4957754 A, US4957558 A, US4953453 A, US4952278 A, US4950490 A, US4944595 A, US4943349 A, US4941922 A, US4927656 A, US4927655 A, US4925530 A, US4923665 A, US4921250 A, US4919758 A, US4912069 A, US4892590 A, US4872913 A, US4863655 A, US4846932 A, US4833191 A, US4828650 A, US4814012 A, US4789244 A, US4781932 A, US4775580 A, US4755494 A, US4753710 A, US4749583 A, US4735811 A, US4711669 A, US4710442 A, US4673438 A, US4655840 A, US4624855 A, US4623150 A, US4613627 A, US4595623 A, US4588443 A, US4562218 A, US4545854 A, US4529653 A, US4524682 A, US4511585 A, US4508595 A, US4482386 A, US4456625 A, US4454268 A, US4445970 A, US4438685 A, US4410571 A, US4394930 A, US4378271 A, US4377440 A, US4329177 A, US4328136 A, US4306059 A, US4303690 A, US4249991 A, US4229225 A, US4225383 A, US4225247 A, US4210490 A, US4204337 A, US4172154 A, US4149550 A, US4133784 A, US4124550 A, US4094077 A, US4089691 A, US4080213 A, US4076547 A, US4070196 A, US4044166 A, US4043862 A, US4017324 A, US3968004 A, US3949145 A, US3493382 A, NL9100590, JP63022636, JP6192577, JP6135487, JP60235624, JP60035052, JP60032386, JP5246417, JP5230401, JP5171049, JP51073143, JP5105815, JP4185468, GB2214516, GB2208651, GB2050459, GB1584387, FR2642731, FR1278195, EP0609983, EP0608031, EP0556774, EP0551954, EP0546956, EP0539514, EP0525245, EP0453980, EP0447797, EP0405146, EP0370913, EP0304401, EP0271853, EP0265745, EP0118240, EP0006390, DE4008862, DE3420195, DE3346970,

Forward Citations: WO18206492, WO12002914, WO11034479, WO11015951, WO11015948, WO10037353, US9890083, US9701583, US9518360, US9480815, US9475732, US9410361, US9375899, US9353482, US9284104, US9267011, US9162421, US9149980, US9139957, US9109116, US9090021, US9040120, US9039651, US9034478, US8927622, US8758564, US8673398, US8658714, US8608018, US8541074, US8501260, US8382888, US8360008, US8353344, US8349443, US8268417, US8152510, US8127720, US8087921, US7967904, US7951436, US7943218, US7909003, US7563830, US7553363, US7481645, US7344784, US7297394, US7241832, US7214414, US7172814, US7083673, US7057032, US6911255, US6878199, US6706145, US2016263285, US2015297004, US2012279650, US2012016328, US2011287273, US2011210164, US2011200844, US2011177316, US2011126776, US2011071507, US2011041475, US2010288500, US2010280149, US2010221560, US2009258172, US2009238912, US2009218347, US2009061126, US2008268158, US2008256821, US2008230001, US2008160327, US2008038560, US2008029045, US2007202228, US2007148384, US2006255507, US2006240726, US2006189238, US2006110498, US2005182196, US2005176856, US2005120915, US2005089606, US2004265453, US2004248486, US2004147738, US2004092613, US2004091581, US2004024102, US2003216492, US2003166779, US2002187340, US10240089, US10196309, US10077597, RU2599367, IT201700049506, FR2948696, ES2582356, EP3061600, EP3061599, EP1719797, CN106977775, CN106003843, CN106003843, CN102510802, CN102510802,

Abstract:
Compositions and methods for manufacturing sheets having a starch-bound matrix reinforced with fibers and optionally including an inorganic mineral filler. Suitable mixtures for forming the sheets are prepared by mixing together water, unmodified and ungelatinized starch granules, an auxiliary water-dispersible organic polymer, fibers, and optionally an inorganic mineral filler in the correct proportions to form a sheet having desired properties. The mixtures are formed into sheets by passing them between one or more sets of heated rollers to form green sheets. The heated rollers cause the auxiliary polymer to form a skin on the outer surfaces of the sheet that prevents the starch granules from causing the sheet to adhere to the rollers upon gelation of the starch. The green sheets are passed between heated rollers to gelatinize the starch granules, and then to dry the sheet by removing a substantial portion of the water by evaporation. The starch and auxiliary polymer form the binding matrix of the sheets with the fibers and optional inorganic filler dispersed throughout the binding matrix. The starch-bound sheets can be cut, rolled, pressed, scored, perforated, folded, and glued to fashion articles from the sheets much like paper or paperboard. The sheets are particularly useful in the mass production of containers, such as food and beverage containers.

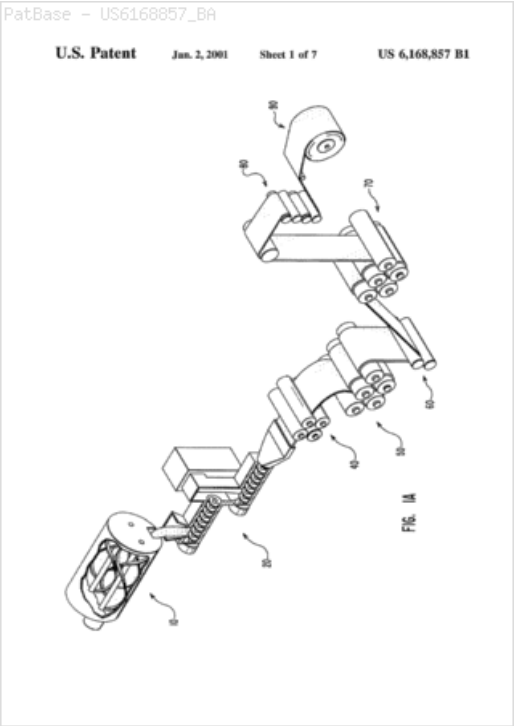

13) Family number: 33376274 (US6200404B) © PatBase

Title: COMPOSITIONS AND METHODS FOR MANUFACTURING STARCH-BASED SHEETS

Priority: US19960629539 19960409 US19980018725 19980204 US19980019907 19980206 US19980183895 19981030 US19980198921 19981124

Family:

Publication number	Publication date	Application number	Application date
US6200404 BA	20010313	US19980198921	19981124

Probable Assignee: E KHASHOGGI IND LLC

Assignee(s):(std)**:** KHASHOGGI E IND

Assignee(s): E KHASHOGGI IND LLC ; E KHASHOGGI INDUSTRIES LLC

Inventor(s):(std)**:** ANDERSEN PER JUST ; CHRISTENSEN BRUCE J ; HODSON SIMON K ; ONG SHAODE

International class (IPC 8-9): B05B11/00 B28B1/00 B28B1/52 B28B11/00 B28B23/00 B28B3/12 B28B3/20 B29C43/00 B29C43/02 B29C43/22 B29C43/24 B29C45/00 B29C49/00 B29C51/00 B29C55/18 B29C67/24 B29C71/00 B32B13/02 B32B23/12 B32B27/04 B32B27/20 B32B5/02 B32B9/00 B65D43/16 C04B26/28 C08J5/18 C08L3/02 (Advanced/Invention)

International class (IPC 1-7): B28B11/06 B28B11/08 B28B11/14 C04B41/45

CPC: Y10S428/906 C08J5/18 B28B1/00 B28B1/52 B28B3/126 B28B3/20 B28B11/00 B28B11/003 B28B23/0081 B29C43/003 B29C43/02 B29C43/22 B29C43/222 B29C43/24 B29C45/0013 B29C49/0005 B29C51/002 B29C55/18 B29C67/242 B29C71/0009 B29K2003/00 B32B5/02 B32B9/00 B32B13/02 B32B23/12 B32B27/04 B32B27/20 B65D43/162 B65D2565/385 C04B26/285 C04B2111/00612 C04B2111/00948 C08J2303/02 C08J2323/02 C08L3/02 Y10T428/24994 Y10T428/24995 Y10T428/31971 Y02W90/11 B05B11/0037 Y10T428/249924

European class: B05B11/00B5 B28B1/00 B28B1/52 B28B11/00 B28B11/00E B28B23/00Z B28B3/12C B28B3/20 B29C43/00B B29C43/02 B29C43/22 B29C43/22B B29C43/24 B29C45/00E B29C49/00B B29C51/00B B29C55/18 B29C67/24C B29C71/00C B32B13/02 B32B23/12 B32B27/04 B32B27/20 B32B5/02 B32B9/00 B65D43/16B C04B26/28B C08J5/18 C08L3/02 L29K3/00 L65D565/38Y7 M04B111/00T6 M04B111/00T66 M08J303/02 M08J323/02

US class: 156/245 156/324 264/130 264/131 264/145 264/160 264/211 264/211.11 264/282 264/286

Classification Explorer

Cited documents: WO9418388, WO9418384, WO9403543, WO9322048, WO9301242, WO9204408, WO9112186, WO9010671, WO8902225, WO8700828, US5844023, US5810961 A, US5705536, US5663216, US5589518, US5569692, US5569514, US5534150, US5525281, US5523293, US5512378, US5512135, US5512090, US5506277, US5501774, US5501771, US5500089, US5496440, US5494509, US5487813, US5480923, US5476621, US5474856, US5470382, US5462982, US5462980, US5456933, US5454863, US5447604, US5436078, US5432000, US5428150, US5427614, US5419962, US5415827, US5412005, US5411639, US5405564, US5405437, US5397834, US5395438, US5393804, US5393333, US5389322, US5382611, US5382285, US5380180, US5378418, US5376320, US5372877, US5367067, US5362777, US5362776, US5360844, US5360830, US5360828, US5360586, US5360473, US5356467, US5352709, US5346541, US5324351, US5320669, US5317119, US5317037, US5314934, US5314754, US5308879, US5300333, US5298273, US5296526, US5296180, US5292782, US5290350, US5288765, US5288318, US5286770, US5284672, US5280055, US5279658, US5278194, US5277764, US5275774, US5273821, US5273167, US5272181, US5269845, US5268187, US5266368, US5264080, US5264030, US5262458, US5258430, US5256711, US5252271, US5248702, US5240561, US5234978, US5234977, US5224595, US5221435, US5208267, US5206087, US5201403, US5194206, US5186990, US5185382, US5178730, US5162126, US5160368, US5153037, US5134179, US5126014 A, US5126013 A, US5124161 A, US5122231 A, US5110413 A, US5108807 A, US5108677 A, US5106880 A, US5104669 A, US5104487 A, US5095054 A, US5082500 A, US5076985 A, US5071512 A, US5061346 A, US5059642 A, US5043196 A, US5039378 A, US5039003 A, US5035930 A, US4979992 A, US4963603 A, US4957754 A, US4957558 A, US4953453 A, US4952278 A, US4950490 A, US4944595 A, US4943349 A, US4941922 A, US4927656 A, US4927655 A, US4925530 A, US4923665 A, US4921250 A, US4919758 A, US4912069 A, US4892590 A, US4872913 A, US4863655 A, US4846932 A, US4833191 A, US4828650 A, US4814012 A, US4789244 A,

US4781932 A, US4775580 A, US4755494 A, US4753710 A, US4749583 A, US4735811 A, US4711669 A, US4710442 A, US4673438 A, US4655840 A, US4624855 A, US4623150 A, US4613627 A, US4595623 A, US4588443 A, US4562218 A, US4545854 A, US4529653 A, US4524682 A, US4511585 A, US4508595 A, US4482386 A, US4456625 A, US4454268 A, US4445970 A, US4438685 A, US4410571 A, US4394930 A, US4378271 A, US4377440 A, US4329177 A, US4328136 A, US4306059 A, US4303690 A, US4249991 A, US4229225 A, US4225383 A, US4225247 A, US4210490 A, US4204337 A, US4172154 A, US4149550 A, US4133784 A, US4124550 A, US4094077 A, US4089691 A, US4080213 A, US4076547 A, US4070196 A, US4044166 A, US4043862 A, US4017324 A, US3968004 A, US3949145 A, US3493382 A, NL9100590, JP63022636, JP6192577, JP6135487, JP60235624, JP60035052, JP60032386, JP5246417, JP5230401, JP5171049, JP51073143, JP5105815, JP4185468, GB2214516, GB2208651, GB2050459, GB1584387, FR2642731, FR1278195, EP0609983, EP0608031, EP0556774, EP0551954, EP0546956, EP0539514, EP0525245, EP0453980, EP0447797, EP0405146, EP0370913, EP0304401, EP0271853, EP0265745, EP0118240, EP0006390, DE4008862, DE3420195, DE3346970,

Forward Citations: WO09051819, WO08137285, US9901888, US9896803, US9890083, US9701583, US9518360, US9475732, US9410361, US9375899, US9353482, US9284104, US9267011, US9243444, US9162421, US9149980, US9139957, US9139473, US9090021, US9080372, US9045277, US9040120, US9039651, US9034478, US9027296, US8927622, US8915033, US8881494, US8758564, US8673398, US8658714, US8604123, US8501260, US8382888, US8360008, US8349443, US8268417, US8152510, US8127720, US8087921, US7951436, US7943218, US7909003, US7553363, US7495044, US7481645, US6939818, US6348116, US2013145664, US2012255672, US2011287273, US2011200844, US2011126776, US2010303883, US2010280149, US2010221560, US2009301667, US2009238912, US2009218347, US2009061126, US2008268158, US2008256821, US2008230001, US2008160327, US2008038560, US2008029045, US2007202228, US2007152530, US2007148383, US2007051034, US2006258783, US2006110498, US2005089606, US2004265453, US2004169306, US2004091581, US2004024102, US2002081422, US10240089, US10196309, US10077597, RU2681908, RU2681907, FR2948696, EP2045073, EP2045073, EP2045073, CN102993467, CN102837254, CN102167845,

Abstract:
Compositions and methods for manufacturing sheets having a starch-bound matrix reinforced with fibers and optionally including an inorganic mineral filler. Suitable mixtures for forming the sheets are prepared by mixing together water, unmodified and ungelatinized starch granules, an auxiliary water-dispersible organic polymer, fibers, and optionally an inorganic mineral filler in the correct proportions to form a sheet having desired properties. The mixtures are formed into sheets by passing them between one or more sets of heated rollers to form green sheets. The heated rollers cause the auxiliary polymer to form a skin on the outer surfaces of the sheet that prevents the starch granules from causing the sheet to adhere to the rollers upon gelation of the starch. The green sheets are passed between heated rollers to gelatinize the starch granules, and then to dry the sheet by removing a substantial portion of the water by evaporation. The starch and auxiliary polymer form the binding matrix of the sheets with the fibers and optional inorganic filler dispersed throughout the binding matrix. The starch-bound sheets can be cut, rolled, pressed, scored, perforated, folded, and glued to fashion articles from the sheets much like paper or paperboard. The sheets are particularly useful in the mass production of containers, such as food and beverage containers.

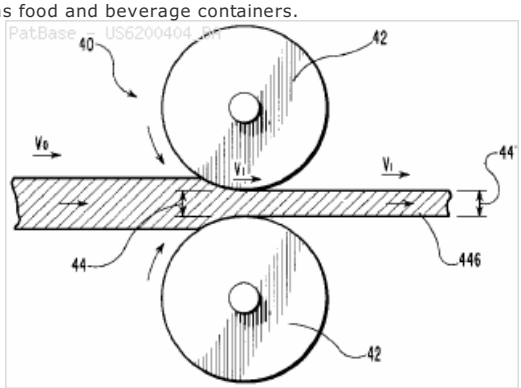

14) Family number: 33376295 (RU2172749C)

© PatBase

Title: COMPOSITION FOR MANUFACTURING SHEET AND STARCH-BONDED SHEET (VARIANTS)

Priority: US19960629539 19960409 RU19980120498 19970409 WO1997US05934 19970409

Family:

Publication number	Publication date	Application number	Application date
AU199726108 A1	19971029	AU19970026108	19970409
AU709125 B2	19990819	AU19970026108	19970409
BRPI9708615 A	20000118	BR1997PI08615	19970409
CA2248771 AA	19980911	CA19972248771	19970409
CA2248771 C	20060606	CA19972248771	19970409
EP0892716 A1	19990127	EP19970917916	19970409
EP0892716 A4	20000517	EP19970917916	19970409
JP2000504058 T2	20000404	JP19970536489T	19970409
JP3425959 B2	20030714	JP19970536489T	19970409
KR100317178 B1	20020904	KR19980706894	19970409
KR19990087468 A	19991227	KR19980706894	19970409
NZ332041 A	20000428	NZ19970332041	19970409
RU2172749 C2	20010827	RU19980120498	19970409
RU98120498 A	20000910	RU19980120498	19981110

Probable Assignee: E KHASHOGGI IND LLC

Assignee(s):(std)**:** KHASHOGGI E IND

Assignee(s): E KHASHOGGI INDUSTRIES LLC ; E. KHASHOGGI INDASTRIZ, EHL-EHL-SI ; ONG SHAODE ; HODSON SIMON K ; ANDERSEN PER J ; CHRISTENSEN BRUCE J ; E KHASHOGGI IND ; E KHASHOGGI IND LLC ; E KHASHOGGI INDUSTRIES

Inventor(s):(std)**:** CHRISTENSEN BRUCE J ; HODSON SIMON K ; ONG SHAODE ; ANDERSEN PER J ; ANDERSEN PER JUST

Inventor(s): BRUCE J CHRISTENSEN ; PER J ANDERSEN ; SHAODE ONG ; SIMON K HODSON ; KHODSON SAJMON K. ; KRISTENSEN BRJUS DZH.

Agent(s): FISHER ADAMS KELLY; FISHER ADAMS KELLY PTY LTD; FISHER ADAMS KELLY CALLINANS; SPRUSON AND FERGUSON; CASSAN MACLEAN

Designated states: AM AT AZ BE BY CH DE DK ES FI FR GB GR IE IT KE LI LU MC NL PT SD SE SZ

International class (IPC 8-9): B05B11/00 B05C5/02 B27N3/00 B28B1/00 B28B1/52 B28B11/00 B28B23/00 B28B3/12 B28B3/20 B29C43/00 B29C43/02 B29C43/06 B29C43/08 B29C43/22 B29C43/24 B29C43/34 B29C43/36 B29C43/46 B29C44/04 B29C45/00 B29C47/00 B29C47/50 B29C47/52 B29C49/00 B29C49/04 B29C49/06 B29C51/00 B29C51/04 B29C51/08 B29C51/10 B29C53/06 B29C53/58 B29C55/18 B29C67/24 B29C70/50 B29C71/00 B31B17/00 B32B13/02 B32B27/04 B32B27/20 B32B37/12 B32B37/14 B32B5/02 B32B5/16 B32B5/18 B32B9/00 B65D43/16 B65D65/38 B65D65/46 C04B16/02 C04B26/00 C04B26/02 C04B26/28 C04B28/00 C04B40/00 C08J5/04 C08J5/18 C08K13/04 C08K3/00 C08L1/26 C08L1/28 C08L3/00 C08L3/02 C08L5/02 C08L5/12 C08L5/14 C08L89/06 C08L97/02 E05D1/02 (Advanced/Invention);
B05C5/02 B29C49/04 B29C51/08 B29C53/58 B32B37/12 B32B5/16 C08J5/04 C08K3/00 (Advanced/Non-invention)

International class (IPC 1-7): B32B5/16 C08J5/04 C08J5/18 C08K13/04 C08K3/00 C08L1/02 C08L1/26 C08L3/02

CPC: Y10S428/906 Y10S977/707 B05B11/0037 B05B11/30 B05C5/0245 B27N3/002 B27N3/007 B28B1/00 B28B1/52 B28B3/126 B28B3/20 B28B11/00 B28B11/003 B28B23/00 B28B23/0081 B28B23/0087 B29C43/00 B29C43/003 B29C43/02 B29C43/08 B29C43/22 B29C43/222 B29C43/24 B29C43/34 B29C43/46 B29C44/0407 B29C45/0013 B29C49/0005 B29C49/0047 B29C49/04 B29C49/06 B29C49/063 B29C51/002 B29C51/04 B29C51/08 B29C51/082 B29C51/10 B29C53/063 B29C53/58 B29C55/18 B29C67/24 B29C67/242 B29C70/50 B29C71/0009 B29C2043/3433 B29C2043/463 B29C2049/4608 B29C2791/006 B29C2795/007 B29K2001/00 B29K2003/00 B29K2005/00 B29K2089/00 B29K2105/06 B29K2105/12 B29K2105/16 B29K2995/006 B29L2024/00 B29L2031/608 B29L2031/712 B29L2031/7132 B31D1/005 B32B5/02 B32B5/18 B32B9/00 B32B13/02 B32B27/04 B32B27/20 B32B37/12 B32B37/144 B65D43/162 B65D65/38 B65D65/466 B65D2565/385 C04B26/02 C04B26/28 C04B26/285 C04B40/00 C04B2111/00612 C04B2111/00948 C08J2303/02 C08J2323/02 C08L1/28 C08L1/286 C08L3/00 C08L3/02 C08L5/02 C08L5/12 C08L5/14 C08L89/06 C08L97/02 E05D1/02 E05Y2900/602 Y10T428/1372 Y10T428/1376 Y10T428/1397 Y10T428/15 Y10T428/24446 Y10T428/24694 Y10T428/249986 Y10T428/31971 Y02W30/97 Y02W90/11 B31B50/32 B31B2105/0022 B32B9/04 B32B3/266 B32B3/28 B32B9/02 B32B23/04 B32B23/22 B32B2307/518 B32B2307/716 B32B2307/7163 B32B2439/00 C08J5/18 B29C48/001 B29C48/0011 B29C48/0017 B29C48/0018 B29C48/0019 B29C48/0022 B29C48/0023 B29C48/022 B29C48/05 B29C48/07 B29C48/08 B29C48/13 B29C48/38 B29C48/465

European class: B05B11/00B5 B27N3/00B B27N3/00R B28B1/00 B28B1/52 B28B11/00 B28B11/00E B28B23/00 B28B23/00Z B28B23/00Z1 B28B3/12C B28B3/20 B29C43/00B B29C43/02 B29C43/22 B29C43/22B B29C43/24 B29C43/34 B29C43/46 B29C44/04A B29C45/00E B29C47/00B B29C47/00J5 B29C47/50 B29C47/52B B29C49/00B B29C49/06B2B B29C51/00B B29C51/04 B29C51/10 B29C53/06B B29C55/18 B29C67/24 B29C67/24C B29C70/50 B29C71/00C B31B1/32 B31B17/00 B31D1/00H1 B32B13/02 B32B27/04 B32B27/20 B32B37/14B B32B5/02 B32B5/18 B32B9/00 B65D43/16B B65D65/38 B65D65/46C C04B26/02 C04B26/28 C04B26/28B C04B40/00 C08J5/18 C08L1/28 C08L1/28F C08L3/00 C08L3/02 C08L5/02 C08L5/12 C08L5/14 C08L89/06 C08L97/02 E05D1/02 L05B11/30 L05C5/02E L29C43/00 L29C43/08 L29C43/34B L29C43/46 L29C43/46A2 L29C47/00J10 L29C47/00J4 L29C47/00J5 L29C47/00L L29C47/00L13 L29C47/00L4 L29C47/00L7 L29C47/00L8 L29C47/00L9 L29C49/00F L29C49/04 L29C49/06 L29C49/46B1A L29C51/04 L29C51/08 L29C51/08B L29C51/10 L29C53/58 L29C791/00E4 L29C795/00D L29K1/00 L29K105/06 L29K105/12 L29K105/16 L29K3/00 L29K5/00 L29K89/00 L29K995/00F14B L29L24/00 L29L31/60C L29L31/712 L29L31/7132 L31B201/26A1A L31B217/08A L32B37/12 L65D565/38Y7 M04B111/00T6 M04B111/00T66 M08J303/02 M08J323/02 P05D1/02 P05Y900/602

Classification Explorer

Cited documents: JP62041399, EP0261820 A1,

Forward Citations: WO15137533, WO09075122, US9296174, US8147979, US8048257, US7960452, RU2639229, RU2603988, KR101347898, JP2011084709, JP2010518329, GB2459524, GB2459524, CN104059239,

Abstract:

FIELD: manufacture of common paper and cardboard. SUBSTANCE: composition is prepared by mixing water, granules of unmodified and ungelatinized starch, cellulose ether, fibrous materials and substantially homogeneous optional inorganic mineral filler dispersed in composition. Composition has ultimate from about 2 kPa to about 5 kPa. Fibrous material has length to thickness ratio exceeding 10:1 and is substantially homogeneously distributed throughout composition. Composition is molded into sheets by passing then between one or plurality of heated rolls to prepare crude sheets. When heated, cellulose ether forms envelope onto external surface of sheet and starch granules stick to rolls as starch further becomes gelatinized. Starch and cellulose ether form bonding sheet matrix in which fibers are dispersed and optionally inorganic filler. Various products are made from sheets, more particularly containers for foodstuffs and beverages. The resulting sheets have properties which are not inferior to those from cardboard, plastic material or metal. Manufacture of such sheets are economical and ecologically safe. EFFECT: improved properties of the composition. 77 cl, 10 dwg, 65 ex, 25 tbl

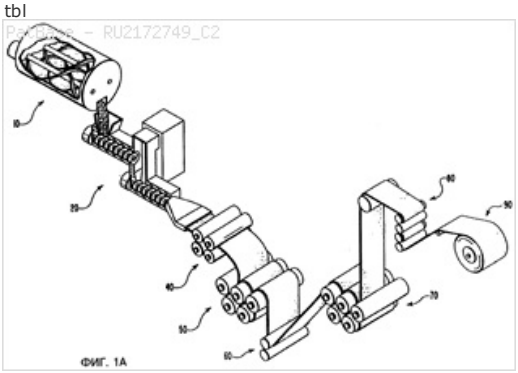

15) Family number: 33376296 (EP1007320B1)

© PatBase

Title: METHODS FOR MANUFACTURING MOLDED SHEETS HAVING A HIGH STARCH CONTENT

Priority: US19960631676 19960409 WO1997US05794 19970409

Family:

Publication number	Publication date	Application number	Application date
AT299793 E	20050815	AT19970922292T	19970409
AU199728005 A1	19971029	AU19970028005	19970409
AU712982 B2	19991118	AU19970028005	19970409

BRPI9710428 A	19990817	BR1997PI10428	19970409
CA2248982 AA	19980915	CA19972248982	19970409
CA2248982 C	20020730	CA19972248982	19970409
DE69733779 D1	20050825	DE19976033779	19970409
DE69733779 T2	20060524	DE19976033779T	19970409
EP1007320 A1	20000614	EP19970922292	19970409
EP1007320 A4	20010314	EP19970922292	19970409
EP1007320 B1	20050720	EP19970922292	19970409
JP2000508258 T2	20000704	JP19970536442T	19970409
JP3296565 B2	20020702	JP19970536442T	19970409
KR19990087469 A	19991227	KR19980706895	19970409
NZ332697 A	20000623	NZ19970332697	19970409

Probable Assignee: E KHASHOGGI IND LLC

Assignee(s):(std)**:** E KHASHOGGI INDUSTRIES ; E KHASHOGGI INDUSTRIES LLC ; KHASHOGGI E IND

Assignee(s): E KHASHOGGI IND LLC ; ONG SHAODE ; HODSON SIMON K ; ANDERSON PER J ; CHRISTENSEN BRUCE J ; E KHASHOGGI IND

Inventor(s):(std)**:** ANDERSEN PER J ; ANDERSON PER J ; CHRISTENSEN BRUCE J ; HODSON SIMON K ; ONG SHAODE ; SIMON K HODSON ; SHAODE ONG ; PER J ANDERSEN ; HODSON K ; CHRISTENSEN J ; BRUCE J CHRISTENSEN ; ANDERSEN J

Agent(s): FISHER ADAMS KELLY; FISHER ADAMS KELLY PTY LTD; FISHER ADAMS KELLY CALLINANS; SPRUSON AND FERGUSON; CASSAN MACLEAN

Designated states: AM AT AZ BE BY CH DE DK ES FI FR GB GR IE IT KE LI LU MC NL PT SD SE SZ

International class (IPC 8-9): B05B11/00 B05C5/02 B27N3/00 B28B1/00 B28B1/52 B28B11/00 B28B23/00 B28B3/12 B28B3/20 B29C43/00 B29C43/06 B29C43/08 B29C43/22 B29C43/24 B29C43/34 B29C43/46 B29C44/04 B29C45/00 B29C47/00 B29C47/50 B29C47/52 B29C47/88 B29C49/00 B29C49/04 B29C49/06 B29C51/00 B29C51/04 B29C51/08 B29C51/10 B29C53/06 B29C53/58 B29C55/18 B29C67/24 B29C70/02 B29C70/50 B29C71/00 B29D7/01 B31B17/00 B32B13/02 B32B27/04 B32B27/20 B32B37/12 B32B37/14 B32B5/02 B32B5/18 B32B9/00 B65D43/16 B65D65/38 B65D65/46 C04B16/02 C04B26/00 C04B26/02 C04B26/28 C04B28/00 C04B40/00 C08J3/02 C08J5/04 C08J5/18 C08L1/28 C08L3/02 C08L5/12 E05D1/02 (Advanced/Invention);
B05C5/02 B29C43/08 B29C43/22 B29C47/00 B29C47/88 B29C49/04 B29C51/08 B29C53/58 B29K1/00 B29L7/00 B32B37/12 C08J3/02 (Advanced/Non-invention)

International class (IPC 1-7): B28B1/52 B28B23/00 B29C43/22 B29C43/24 B29C47/00 B29C47/88 B29C70/02 B29D7/01 B29K1/00 B29L7/00 C08J3/02 C08J5/04 C08L3/02

CPC: Y02W30/97 Y02W90/11 B05B11/0037 B05B11/30 B05C5/0245 B27N3/002 B27N3/007 B28B1/00 B28B1/52 B28B3/126 B28B3/20 B28B11/00 B28B11/003 B28B23/00 B28B23/0081 B28B23/0087 B29C43/00 B29C43/003 B29C43/08 B29C43/22 B29C43/222 B29C43/24 B29C43/34 B29C43/46 B29C44/0407 B29C45/0013 B29C49/0005 B29C49/0047 B29C49/04 B29C49/06 B29C49/063 B29C51/002 B29C51/04 B29C51/08 B29C51/082 B29C51/10 B29C53/063 B29C53/58 B29C55/18 B29C67/24 B29C67/242 B29C70/50 B29C71/0009 B29C2043/3433 B29C2043/463 B29C2791/006 B29C2795/007 B29K2001/00 B29K2003/00 B29K2005/00 B29K2089/00 B29K2105/06 B29K2105/12 B29K2105/16 B29K2995/006 B29L2024/00 B29L2031/608 B29L2031/712 B29L2031/7132 B31D1/005 B32B5/02 B32B5/18 B32B9/00 B32B13/02 B32B27/04 B32B27/20 B32B37/00 B32B37/12 B65D43/162 B65D65/38 B65D65/466 B65D2565/385 C04B26/00 C04B26/02 C04B26/28 C08J5/18 C08J2303/02 C08J2323/02 C08L1/286 C08L3/02 C08L5/12 E05D1/02 E05Y2900/602 B31B50/32 B31B2105/0022 B32B9/04 B32B3/28 B32B9/02 B32B23/04 B32B23/22 B32B2307/7163 B32B2439/00 B32B37/144 Y02A40/961 B29C48/0017 B29C48/022 B29C48/05 B29C48/08 B29C48/09 B29C48/13 B29C48/15 B29C48/38 B29C48/465 B29C48/91

European class: B05B11/00B5 B27N3/00B B27N3/00R B28B1/00 B28B1/52 B28B11/00 B28B11/00E B28B23/00 B28B23/00Z B28B23/00Z1 B28B3/12C B28B3/20 B29C43/00B B29C43/22 B29C43/22B B29C43/24 B29C43/34 B29C43/46 B29C44/04A B29C45/00E B29C47/00B B29C47/50 B29C47/52B B29C49/00B B29C49/06B2B B29C51/00B B29C51/04 B29C51/10 B29C53/06B B29C55/18 B29C67/24 B29C67/24C B29C70/50 B29C71/00C B31B1/32 B31B17/00 B31D1/00H1 B32B13/02 B32B27/04 B32B27/20 B32B37/00 B32B37/14B B32B5/02 B32B5/18 B32B9/00 B65D43/16B B65D65/38 B65D65/46C C04B26/00 C04B26/02 C04B26/28 C08J5/18 C08L1/28F C08L3/02 C08L5/12 E05D1/02 L05B11/30 L05C5/02E L29C43/00 L29C43/08 L29C43/34B L29C43/46 L29C43/46A2 L29C47/00J10 L29C47/00J5 L29C47/00J6 L29C47/00L7 L29C47/02 L29C49/00F L29C49/04 L29C49/06 L29C51/04 L29C51/08 L29C51/08B L29C51/10 L29C53/58 L29C791/00E4 L29C795/00D L29K1/00 L29K105/06 L29K105/12 L29K105/16 L29K3/00 L29K5/00 L29K89/00 L29K995/00F14B L29L24/00 L29L31/60C L29L31/712 L29L31/7132 L31B201/26A1A L31B217/08A L32B37/12 L65D565/38Y7 M08J303/02 M08J323/02 P05D1/02 P05Y900/602

Classification Explorer

Cited documents: WO9412328 A1, US5626954 A, US5508072 A, US5453310 A, US5385764 A,

Forward Citations: WO13177271, WO13177271, US7858684, TWI381018, KR101053549, KR100802316,

Abstract:
(Claim 1) 1. A method for manufacturing a starch-bound sheet comprising the steps of:(a) mixing together water, ungelatinized starch granules, a cellulosic ether, a fibrous material, and optionally an inorganic aggregate filler to form a moldable mixture;(b) forming the moldable mixture into an initial green sheet by passing the mixture between at least one set of forming rollers (40) having a temperature such that a portion of the cellulosic ether thermally precipitates so as to reduce adhesion of the initial green sheet to the forming rollers upon gelatinization of the ungelatinized starch granules in step (c);(c) passing the initial green sheet between at least one set of rollers having a temperature such that at least a portion of the ungelatinized starch granules become gelatinized and in order to form an intermediate green sheet; and(d) heating the green sheet in order to remove a portion of the water from the intermediate green sheet in order to form a hardened sheet having a binding matrix including dried starch and cellulosic ether.

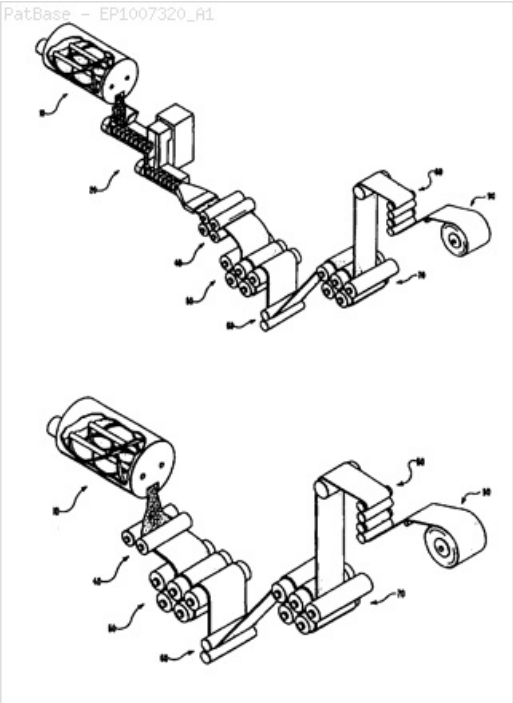

16) Family number: 33376297 (EP0775173B1)

© PatBase

Title: STARCH-BOUND CELLULAR MATRIX

Priority: US19940288664 19940809 US19940288667 19940809 WO1995US08803 19950713

Family:

Publication number	Publication date	Application number	Application date
AT226612 E	20021115	AT19950925645T	19950713
AU199529710 A1	19960307	AU19950029710	19950713
AU705277 B2	19990520	AU19950029710	19950713
AU705277 C	20070329	AU19950029710	19950713
DE69528656 D1	20021128	DE19956028656	19950713
DE69528656 T2	20030626	DE19956028656T	19950713
EP0775173 A1	19970528	EP19950925645	19950713
EP0775173 A4	19971210	EP19950925645	19950713
EP0775173 B1	20021023	EP19950925645	19950713
JP10505369 T2	19980526	JP19960507316T	19950713
KR19970704832 A	19970906	KR19970700866	19970210
KR977004832 A	19970906	KR19977000866	19970210
NZ289770 A	19990128	NZ19950289770	19950713
RU97103998 A	19990520	RU19970103998	19970309

Probable Assignee: E KHASHOGGI IND LLC

Assignee(s):(std)**:** KHASHOGGI E IND ; KHASHOGGI IND LLC SUBSTITUTED

Assignee(s): E KHASHOGGI INDUSTRIES LLC SUBSTITUTED UNDER S24 1 FROM E ; E KHASHOGGI IND ; E KHASHOGGI IND LLC ; E KHASHOGGI IND LLC FROM E ; E KHASHOGGI IND LLC SUBSTITUTED UNDER S24 ; E KHASHOGGI IND LLC SUBSTITUTED UNDER S24 1 FROM E ; E KHASHOGGI INDUSTRIES ; E KHASHOGGI INDUSTRIES LLC

Inventor(s):(std)**:** ANDERSEN PER JUST ; HODSON SIMON K ; HODSON K ; ANDERSEN JUST

Inventor(s): PER JUST ANDERSEN ; SIMON K HODSON

Agent(s): FISHER ADAMS KELLY; FISHER ADAMS KELLY PTY LTD; FISHER ADAMS KELLY CALLINANS; SPRUSON AND FERGUSON

Designated states: AT BE CH DE DK ES FR GB GR IE IT LI LU MC NL PT SE

International class (IPC 8-9): A61K47/36 B01F3/12 B05B11/00 B05C1/08 B05C3/18 B05C5/02 B27N3/00 B28B1/00 B28B1/52 B28B11/00 B28B11/24 B28B13/02 B28B13/06 B28B23/00 B28B3/00 B28B3/02 B28B3/12 B28B3/20 B28B3/26 B28B7/42 B28C7/02 B29B9/12 B29C31/04 B29C33/02 B29C33/10 B29C33/36 B29C33/58 B29C39/00 B29C39/42 B29C43/00 B29C43/02 B29C43/06 B29C43/08 B29C43/22 B29C43/24 B29C43/34 B29C43/36 B29C43/38 B29C43/46 B29C44/04 B29C45/00 B29C49/00 B29C51/00 B29C51/04 B29C51/10 B29C53/06 B29C53/58 B29C55/18 B29C67/20 B29C67/24 B29C70/02 B29C70/12 B29C70/50 B29C71/00 B31B17/00 B32B13/02 B32B27/04 B32B27/20 B32B37/12 B32B37/14 B32B5/02 B32B5/14 B32B5/18 B65D1/00 B65D43/16 B65D5/00 B65D65/38 B65D65/40 B65D65/46 C04B14/06 C04B14/38 C04B16/02 C04B20/00 C04B22/00 C04B22/04 C04B24/00 C04B24/14 C04B24/38 C04B26/00 C04B26/02 C04B26/28 C04B28/00 C04B28/02 C04B32/00 C04B38/00 C04B40/00 C04B40/06 C04B41/45 C04B41/61 C04B7/36 C04B7/52 C08J3/20 C08J9/00 C08J9/12 C08K7/02 C08L1/28 C08L101/00 C08L29/04 C08L3/00 C08L3/02 C08L31/04 C08L33/02 C08L5/02 C08L5/12 C08L5/14 C08L61/28 C08L89/06 C08L97/02 E05D1/02 (Advanced/Invention);
A61K47/36 B05B11/00 B05C1/08 B05C3/18 B05C5/02 B27M3/00 B29B9/12 B29C31/04 B29C33/02 B29C33/10 B29C53/58 B32B37/12 B65D1/00 C08J3/20 C08L101/00 C08L89/06 E05D1/02 (Advanced/Non-invention);
A61K47/36 B27N3/00 B29B9/12 B29C31/04 B29C33/02 B29C33/10 B29C33/56 B29C43/00 B29C43/04 B29C43/34 B29C43/36 B29C44/02 B29C67/20 B29C71/00 B32B5/18 B65D1/00 B65D43/16 B65D65/46 C04B20/00 C04B26/00 C04B40/00 C08J3/20 C08J9/00 C08K7/00 C08L101/00 C08L29/00 C08L3/00 C08L31/00 C08L33/00 C08L61/00 C08L89/00 (Core/Invention);
B05B11/00 B05C5/02 E05D1/00 (Core/Non-invention)

International class (IPC 1-7): A61K47/36 B27M3/00 B28B1/52 B29B9/12 B29C31/04 B29C33/02 B29C33/10 B29C33/58 B65D1/09 C08J3/20 C08K7/02 C08L101/00 C08L29/04 C08L3/00 C08L3/02 C08L3/04 C08L31/04 C08L33/02 C08L61/28 C08L89/06

CPC: Y10S428/913 B01F3/1214 B01F2003/125 B05B11/0037 B05B11/30 B05C1/0826 B05C1/0834 B05C3/18 B05C5/0245 B27N3/002 B27N3/007 B28B1/00 B28B1/52 B28B3/00 B28B3/02 B28B3/126 B28B3/20 B28B3/2645 B28B7/42 B28B11/00 B28B11/003 B28B11/008 B28B11/24 B28B11/245 B28B13/021 B28B13/06 B28B23/00 B28B23/0081 B28B23/0087 B28C7/02 B29C33/10 B29C33/20 B29C33/36 B29C39/003 B29C39/42 B29C43/00 B29C43/003 B29C43/02 B29C43/06 B29C43/08 B29C43/34 B29C43/36 B29C43/38 B29C44/0407 B29C45/0013 B29C49/0005 B29C51/002 B29C51/04 B29C51/10 B29C53/063 B29C53/58 B29C55/18 B29C67/202 B29C67/24 B29C67/242 B29C70/025 B29C70/12 B29C70/50 B29C71/0009 B29C2043/3433 B29C2043/3615 B29C2043/3621 B29C2043/3623 B29C2043/3689 B29C2043/5841 B29C2049/4608 B29C2795/007 B29K2003/00 B29K2005/00 B29K2089/00 B29K2093/00 B29K2105/12 B29K2105/16 B29L2024/00 B29L2031/608 B29L2031/712 B29L2031/7132 B31D1/005 B32B5/02 B32B13/02 B32B27/04 B32B27/20 B32B37/12 B32B37/144 B65D5/00 B65D11/02 B65D43/162 B65D65/38 B65D65/466 B65D2301/20 B65D2565/385 C04B7/527 C04B14/064 C04B16/02 C04B20/002 C04B20/0048 C04B22/002 C04B22/04 C04B24/00 C04B24/14 C04B24/38 C04B26/00 C04B26/02 C04B26/026 C04B26/28 C04B26/285 C04B28/00 C04B28/02 C04B38/0006 C04B40/00 C04B40/0032 C04B40/006 C04B40/0616 C04B41/45 C04B41/61 C08J9/12 C08J2303/00 C08L1/28 C08L1/286 C08L3/00 C08L3/02 C08L5/02 C08L5/12 C08L5/14 C08L89/06 C08L97/02 E05D1/02 E05Y2900/602 Y10T428/1348 Y10T428/1372 Y10T428/1376 Y10T428/24992 Y10T428/249961 Y10T428/249983 Y10T428/249986 Y10T428/249989 Y10T428/24999 Y10T428/249991 Y10T428/249992 Y02W30/97 Y02W90/11 B29C44/3402 B31B50/32 B31B2105/0022 B32B1/02 B32B2262/062 B32B2305/08 B32B2305/30 B32B2305/70 B32B2307/7246 B32B2317/20 B32B2439/70 B32B5/18 B32B5/14 C08J9/0085 Y02A40/961 B29C48/0011 B29C48/0017 B29C48/03 B29C48/15

European class: B01F3/12B2 B27N3/00B B27N3/00R B28B1/00 B28B1/52 B28B11/00 B28B11/00E B28B11/00E3 B28B11/24 B28B11/24D B28B13/02C B28B13/06 B28B23/00 B28B23/00Z B28B23/00Z1 B28B3/00 B28B3/02 B28B3/12C B28B3/20 B28B3/26E B28B7/42 B28C7/02 B29C33/36 B29C39/00B B29C39/42 B29C43/00B B29C43/02 B29C43/06 B29C43/08 B29C43/34 B29C43/36 B29C43/38 B29C44/04A B29C45/00E B29C49/00B B29C51/00B B29C51/04 B29C51/10 B29C53/06B B29C55/18 B29C67/20C B29C67/22D1 B29C67/24 B29C67/24C B29C70/02A4 B29C70/12 B29C70/50 B29C71/00C B31B1/32 B31B17/00 B31D1/00H1 B32B13/02 B32B27/04 B32B27/20 B32B37/14B B32B5/02 B32B5/14 B32B5/18 B65D11/02 B65D43/16B B65D5/00 B65D65/38 B65D65/46C C04B14/06G C04B16/02 C04B20/00D2 C04B20/00F C04B22/00H C04B22/04 C04B24/00 C04B24/14 C04B24/38 C04B26/00 C04B26/02 C04B26/02B C04B26/28 C04B26/28B C04B28/00 C04B28/02 C04B38/00B C04B40/00 C04B40/00D1 C04B40/00D7 C04B40/06A2 C04B41/45 C04B41/61 C04B7/52H C08J9/00N C08J9/12 C08L1/28 C08L1/28F C08L3/00 C08L3/02 C08L5/02 C08L5/12 C08L5/14 C08L89/06 C08L97/02 E05D1/02 L01F3/12G L05B11/00B5 L05B11/30 L05C1/08P L05C1/08P2 L05C3/18 L05C5/02E L29C33/10 L29C33/20 L29C43/00 L29C43/06 L29C43/08 L29C43/34B L29C43/36C2 L29C43/36C2B L29C43/36C2B1 L29C43/36H2 L29C43/58D1 L29C47/00L4 L29C47/00L7 L29C47/02 L29C49/46B1A L29C53/58 L29C795/00D L29K105/12 L29K105/16 L29K3/00 L29K5/00 L29K89/00 L29K93/00 L29L24/00 L29L31/60C L29L31/712 L29L31/7132 L31B201/26A1A L31B217/08A L32B37/12 L65D301/20 L65D565/38Y7 M08J303/00 P05D1/02 P05Y900/602

Classification Explorer

Cited documents: WO9112186, US5095054, US5017268, US4613627 A, EP0587078 A1, EP0524920 A1,

Forward Citations: JP2006021356, EP2106419, DE102004031078,

Abstract:
(Claim 1) 1. a starch-based binder that has been substantially gelatinized by water and then hardened through the removal of a substantial quantity of the water by evaporation; and

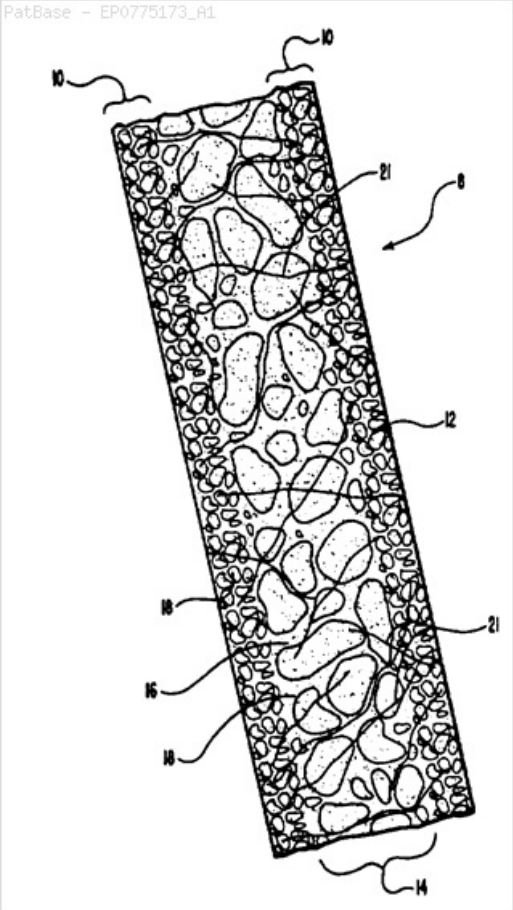

17) Family number: 33376312 (WO9605254A1) © PatBase

Title: STARCH-BOUND CELLULAR MATRIX

Priority: US19940288664 19940809 US19940288667 19940809 WO1995US08803 19950713

Family:

Publication number	Publication date	Application number	Application date
CA2197059 AA	19970207	CA19952197059	19950713
WO9605254 A1	19960222	WO1995US08803	19950713

Probable Assignee: KHASHOGGI E IND

Assignee(s):(std)**:** KHASHOGGI E IND

Assignee(s): ANDERSEN PER JUST ; E KHASHOGGI IND ; E KHASHOGGI IND LLC ; E KHASHOGGI INDUSTRIES ; HODSON SIMON K

Inventor(s):(std)**:** ANDERSEN PER JUST ; HODSON SIMON K

Agent(s): RIDOUT AND MAYBEE LLP

Designated states: AM AT AU BB BE BF BG BJ BR BY CA CF CG CH CI CM CN CZ DE DK EE ES FI FR GA GB GE GN GR HU IE IS IT JP KE KG KP KR KZ LK LR LT LU LV MC MD MG ML MN MR MW MX NE NL NO NZ PL PT RO RU SD SE SG SI SK SN SZ TD TG TJ TM TT UA UG UZ VN

International class (IPC 8-9): A61K47/36 B01F3/12 B27N3/00 B28B1/00 B28B1/52 B28B11/00 B28B11/24 B28B13/02 B28B13/06 B28B23/00 B28B3/00 B28B3/02 B28B3/12 B28B3/20 B28B3/26 B28B7/42 B28C7/02 B29B9/12 B29C31/04 B29C33/02 B29C33/10 B29C33/36 B29C33/58 B29C33/60 B29C39/00 B29C39/42 B29C43/00 B29C43/02 B29C43/06 B29C43/08 B29C43/22 B29C43/24 B29C43/34 B29C43/36 B29C43/38 B29C43/46 B29C44/04 B29C45/00 B29C49/00 B29C51/00 B29C51/04 B29C51/10 B29C53/06 B29C55/18 B29C67/20 B29C67/24 B29C70/02 B29C70/12 B29C70/50 B29C71/00 B31B17/00 B32B13/02 B32B27/04 B32B27/20 B32B37/14 B32B5/02 B32B5/14 B32B5/18 B65D1/00 B65D43/16 B65D5/00 B65D65/38 B65D65/40 B65D65/46 C04B14/06 C04B14/38 C04B16/02 C04B20/00 C04B22/00 C04B22/04 C04B24/00 C04B24/14 C04B24/38 C04B26/00 C04B26/02 C04B26/28 C04B28/00 C04B28/02 C04B32/00 C04B38/00 C04B40/00 C04B40/06 C04B41/45 C04B41/61 C04B7/36 C04B7/52 C08J3/20 C08J9/00 C08J9/12 C08J9/28 C08K3/00 C08K5/00 C08K7/02 C08L1/28 C08L101/00 C08L29/04 C08L3/00 C08L3/02 C08L31/04 C08L33/02 C08L5/02 C08L5/12 C08L5/14 C08L61/28 C08L89/06 C08L97/02 E05D1/02 (Advanced/Invention); B05B11/00 B05C1/08 B05C3/18 B05C5/02 B29C53/58 B32B37/12 E05D1/02 (Advanced/Non-invention)

International class (IPC 1-7): B27M3/00 B29C33/60 B65D65/46 C08J9/28 C08K3/00 C08K5/00 C08K7/02 C08L101/00 C08L3/02 C08L89/06

CPC: Y10S428/913 B01F3/1214 B01F2003/125 B05B11/0037 B05B11/30 B05C1/0826 B05C1/0834 B05C3/18 B05C5/0245 B27N3/002 B27N3/007 B28B1/00 B28B1/52 B28B3/00 B28B3/02 B28B3/126 B28B3/20 B28B3/2645 B28B7/42 B28B11/00 B28B11/003 B28B11/008 B28B11/24 B28B11/245 B28B13/021 B28B13/06 B28B23/00 B28B23/0081 B28B23/0087 B28C7/02 B29C33/10 B29C33/20 B29C33/36 B29C39/003 B29C39/42 B29C43/00 B29C43/003 B29C43/02 B29C43/06 B29C43/08 B29C43/34 B29C43/36 B29C43/38 B29C44/0407 B29C45/0013 B29C49/0005 B29C51/002 B29C51/04 B29C51/10 B29C53/063 B29C53/58 B29C55/18 B29C67/202 B29C67/24 B29C67/242 B29C70/025 B29C70/12 B29C70/50 B29C71/0009 B29C2043/3433 B29C2043/3615 B29C2043/3621 B29C2043/3623 B29C2043/3689 B29C2043/5841 B29C2049/4608 B29C2795/007 B29K2003/00 B29K2005/00 B29K2089/00 B29K2093/00 B29K2105/12 B29K2105/16 B29L2024/00 B29L2031/608 B29L2031/712 B29L2031/7132 B31D1/005 B32B5/02 B32B13/02 B32B27/04 B32B27/20 B32B37/12 B32B37/144 B65D5/00 B65D11/02 B65D43/162 B65D65/38 B65D65/466 B65D2301/20 B65D2565/385 C04B7/527 C04B14/064 C04B16/02 C04B20/002 C04B20/0048 C04B22/002 C04B22/04 C04B24/00 C04B24/14 C04B24/38 C04B26/00 C04B26/02 C04B26/026 C04B26/28 C04B26/285 C04B28/00 C04B28/02 C04B38/0006 C04B40/00 C04B40/0032 C04B40/006 C04B40/0616 C04B41/45 C04B41/61 C08J9/12 C08J2303/00 C08L1/28 C08L1/286 C08L3/00 C08L3/02 C08L5/02 C08L5/12 C08L5/14 C08L89/06 C08L97/02 E05D1/02 E05Y2900/602 Y10T428/1348 Y10T428/1372 Y10T428/1376 Y10T428/24992 Y10T428/249961 Y10T428/249983 Y10T428/249986 Y10T428/249989 Y10T428/24999 Y10T428/249991 Y10T428/249992 Y02W30/97 Y02W90/11 B29C44/3402 B31B50/32 B31B2105/0022 B32B1/02 B32B2262/062 B32B2305/08 B32B2305/30 B32B2305/70 B32B2307/7246 B32B2317/20 B32B2439/70 B32B5/18 B32B5/14 C08J9/0085 Y02A40/961 B29C48/0011 B29C48/0017 B29C48/03 B29C48/15

European class: B01F3/12B2 B27N3/00B B27N3/00R B28B1/00 B28B1/52 B28B11/00 B28B11/00E B28B11/00E3 B28B11/24 B28B11/24D B28B13/02C B28B13/06 B28B23/00 B28B23/00Z B28B23/00Z1 B28B3/00 B28B3/02 B28B3/12C B28B3/20 B28B3/26E B28B7/42 B28C7/02 B29C33/36 B29C39/00B B29C39/42 B29C43/00B B29C43/02 B29C43/06 B29C43/08 B29C43/34 B29C43/36 B29C43/38 B29C44/04A B29C45/00E B29C49/00B B29C51/00B B29C51/04 B29C51/10 B29C53/06B B29C55/18 B29C67/20C B29C67/22D1 B29C67/24 B29C67/24C B29C70/02A4 B29C70/12 B29C70/50 B29C71/00C B31B1/32 B31B17/00 B31D1/00H1 B32B13/02 B32B27/04 B32B27/20 B32B37/14B B32B5/02 B32B5/14 B32B5/18 B65D11/02 B65D43/16B B65D5/00 B65D65/38 B65D65/46C C04B14/06G C04B16/02 C04B20/00D2 C04B20/00F C04B22/00H C04B22/04 C04B24/00 C04B24/14 C04B24/38 C04B26/00 C04B26/02 C04B26/02B C04B26/28 C04B26/28B C04B28/00 C04B28/02 C04B38/00B C04B40/00 C04B40/00D1 C04B40/00D7 C04B40/06A2 C04B41/45 C04B41/61 C04B7/52H C08J9/00N C08J9/12 C08L1/28 C08L1/28F C08L3/00 C08L3/02 C08L5/02 C08L5/12 C08L5/14 C08L89/06 C08L97/02 E05D1/02 L01F3/12G L05B11/00B5 L05B11/30 L05C1/08P L05C1/08P2 L05C3/18 L05C5/02E L29C33/10 L29C33/20 L29C43/00 L29C43/06 L29C43/08 L29C43/34B L29C43/36C2 L29C43/36C2B L29C43/36C2B1 L29C43/36H2 L29C43/58D1 L29C47/00L4 L29C47/00L7 L29C47/02 L29C49/46B1A L29C53/58 L29C795/00D L29K105/12 L29K105/16 L29K3/00 L29K5/00 L29K89/00 L29K93/00 L29L24/00 L29L31/60C L29L31/712 L29L31/7132 L31B201/26A1A L31B217/08A L32B37/12 L65D301/20 L65D565/38Y7 M08J303/00 P05D1/02 P05Y900/602

Classification Explorer

Cited documents: WO9112186 A1, US5095054 A, US5017268 A,

Forward Citations: WO9813184, WO0220238, US7967904, US7083673, US6878199, US6254814, RU2597906, NL1004138, EP1356145, EP1356145, EP1265957, EP1265957, EP1265957, EP1229075, EP1229075, EP0895847, EP0895847, CN103252827, AT512358, AT512358,

Abstract:
Compositions and methods of manufacturing articles, particularly containers and packaging materials, having a particle packed, highly inorganically filled, cellular matrix (8) are disclosed. Suitable inorganically filled mixtures are prepared by mixing together a starch-based binder, a solvent, inorganic aggregates, and optimal admixtures, e.g., fibers, mold-releasing agents, rheology-modifying agents, plasticizers, coating materials, and dispersants, in the correct proportions to form an article which has the desired performance criteria. The inorganically filled mixtures have a predetermined viscosity and are heated between molds at an elevated temperature and pressure to produce form-stable articles having a desired shape and a selectively controlled cellular structure matrix (8). The molded articles may be placed in a high humidity chamber to obtain the necessary flexibility for their intended use. The articles may be manufactured to have properties substantially similar to articles presently made from conventional materials like paper, paperboard, polystyrene, plastic, or other organic materials. They have special utility in the mass production of containers, particularly food and beverage containers.

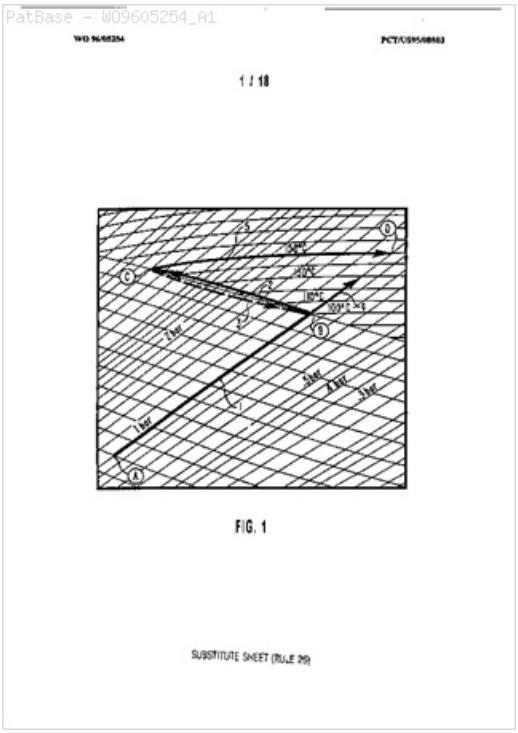

18) Family number: 5003367 (EP0024748A2)

© PatBase

Title: CONSTRUCTION AND/OR APPLICATION IN RELATION TO THE GENERATION OR THE USE OF PRESSURES, FORCES, FLOWS AND MOVEMENTS IN AND BY MEANS OF HYDRAULIC OR HYDRO-PNEUMATIC SYSTEMS.

Priority: NL19790000219 19790111 NL19790000988 19790208 NL19790001395 19790222 NL19790004427 19790606 NL19790004566 19790611 NL19790006784 19790912 EP19800200114 19800208

Family:

Publication number	Publication date	Application number	Application date
EP0024748 A2	19810311	EP19800200114	19800208
EP0024748 A3	19810826	EP19800200114	19800208
NL7900219 A	19800715	NL19790000219	19790111
NL7900988 A	19800812	NL19790000988	19790208
NL7901395 A	19800826	NL19790001395	19790222
NL7904427 A	19800715	NL19790004427	19790606
NL7904566 A	19801215	NL19790004566	19790611
NL7906784 A	19801215	NL19790006784	19790912
NL8002517 A	19810901	NL19800002517	19800501
NL8100028 A	19810901	NL19810000028	19810106

Probable Assignee: PROWECO BV

Assignee(s):(std)**:** PROWECO BV

Assignee(s): PROWECO B V ; PROWECO B V POSTBUS 3106 TE 6202 NC MAASTRICHT

Inventor(s):(std)**:** VAN DEN BERG JOHANNES VINCENTI ; TEERLING EPPENS HARMANNA REINA ; TEERLING LEONARD

Inventor(s): VAN DEN BERG JOHANNES VINCENTIUS

Designated states: AT BE CH DE FR GB IT NL SE

International class (IPC 8-9): B06B1/18 B23P19/02 B26D7/08 B28B1/08 B30B15/22 E02D5/76 E02D5/80 E02D7/00 E02D7/10 E02D7/24 E04G21/12 E21B4/18 E21B47/00 E21B7/26 F15B21/12 (Advanced/Invention); B06B1/18 B23P19/02 B26D7/08 B28B1/08 B30B15/16 E02D5/74 E02D5/80 E02D7/00 E04G21/12 E21B4/00 E21B47/00 E21B7/00 F15B21/00 (Core/Invention)

International class (IPC 1-7): B02C1/00 B06B1/00 B06B1/18 B06B1/20 B21J9/12 B28B3/00 B30B15/22 E01C19/30 E02D11/00 E02D7/00 E02D7/10 E02D7/18 E04G21/12 F01B11/04 F15B1/02 F15B21/12 F16H43/00 F16L1/02

CPC: B06B1/183 F15B21/125 B23P19/027 B26D7/08 B30B15/22 B28B1/08 E02D5/76 E02D5/808 E02D7/00 E02D7/24 E21B4/18 E21B7/26 E21B47/00 E02D7/10 E04G21/12 F15B21/12

European class: B06B1/18B B23P19/027 B23P19/02D B23P19/033 B26D7/08 B28B1/08 B30B15/22 E02D5/76 E02D5/80F E02D7/00 E02D7/10 E02D7/24 E04G21/12 E21B4/18 E21B47/00 E21B7/26 F15B21/12 F15B21/12B

Classification Explorer

Cited documents: US2755898 A, FR2162686 A2, FR1557449 A, DE2418858 A1,

Forward Citations: US6058632, US4838023, EP0156939, EP0042919, EP0042919, CN105603976, CN103774850, CN103774850, CN103104568, CN103104568,

Abstract:
The main object of this invention is the generation of pressures, forces, flows and motion and several methods are given in principle concerning the application of the hydraulic scheme as well as the constructions which are especially suitable for the generation. Characteristic for these hydraulic schemes are the consistent pressure or volume controlled schemes and the flexible adjustment between the motion of the piston and the motion of the hydraulic flow. With this a universal rotating control valve is important; characteristic of it is the adjustabiliiy of the relative opening times in different phases. Further a mass motion reactor which transforms kinetic energy into pressure. The applications are mainly related to transport under influence of shock, asymmetric vibrations, dynamic effects by asymmetric vibrations and effects on the frictional resistance by vibrations and savings in and simplification of constructions by replacement of static forces which require a frame through dynamic forces where the reaction is supplied by the inertia of a mass, where this is useful for the speed, and the simplicity is the pneumatic drive

combined with the hydraulic drive.

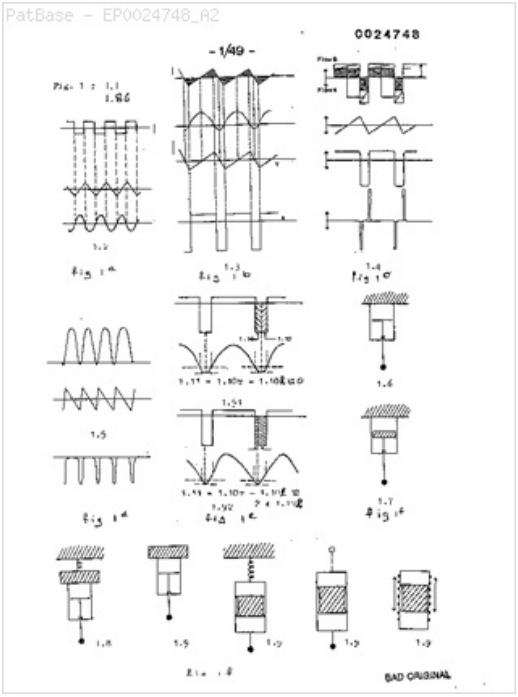

19) Family number: 33378515 (US5868824A)

© PatBase

Title: INORGANICALLY FILLED, STARCH-BASED COMPOSITIONS FOR MANUFACTURING CONTAINERS AND OTHER ARTICLES HAVING A THERMODYNAMICALLY CONTROLLED CELLULAR MATRIX

Priority: US19920929898 19920811 US19920982383 19921125 US19930095662 19930721 US19930109100 19930818 US19940218971 19940325 US19940288664 19940809 US19940288667 19940809 US19960691861 19960802

Family:

Publication number	Publication date	Application number	Application date
US5868824 A	19990209	US19960691861	19960802

Probable Assignee: EARTHSHELL SPE LLC

Assignee(s):(std)**:** KHASHOGGI E IND

Assignee(s): E KHASHOGGI IND ; E KHASHOGGI IND LLC ; E KHASHOGGI INDUSTRIES LLC ; EARTHSHELL SPE LLC

Inventor(s):(std)**:** ANDERSEN PER JUST ; HODSON SIMON K

International class (IPC 8-9): A61K47/36 B01F3/12 B27N3/00 B28B1/00 B28B1/52 B28B11/00 B28B11/24 B28B13/02 B28B13/06 B28B23/00 B28B3/00 B28B3/02 B28B3/12 B28B3/20 B28B3/26 B28B7/42 B28C7/02 B29B9/12 B29C31/04 B29C33/02 B29C33/10 B29C33/36 B29C33/58 B29C39/00 B29C39/42 B29C43/00 B29C43/02 B29C43/06 B29C43/08 B29C43/22 B29C43/24 B29C43/34 B29C43/36 B29C43/38 B29C43/46 B29C44/04 B29C45/00 B29C49/00 B29C51/00 B29C51/04 B29C51/10 B29C53/06 B29C55/18 B29C67/20 B29C67/24 B29C70/02 B29C70/12 B29C70/50 B29C71/00 B31B17/00 B32B13/02 B32B27/04 B32B27/20 B32B37/14 B32B5/02 B32B5/14 B32B5/18 B65D1/00 B65D43/16 B65D5/00 B65D65/38 B65D65/40 B65D65/46 C04B14/06 C04B14/38 C04B16/02 C04B20/00 C04B22/00 C04B22/04 C04B24/00 C04B24/14 C04B24/38 C04B26/00 C04B26/02 C04B26/28 C04B28/00 C04B28/02 C04B32/00 C04B38/00 C04B40/00 C04B40/06 C04B41/45 C04B41/61 C04B7/36 C04B7/52 C08J3/20 C08J9/00 C08J9/12 C08K7/02 C08L1/28 C08L101/00 C08L29/04 C08L3/00 C08L3/02 C08L31/04 C08L33/02 C08L5/02 C08L5/12 C08L5/14 C08L61/28 C08L89/06 C08L97/02 E05D1/02 (Advanced/Invention);
B05B11/00 B05C1/08 B05C3/18 B05C5/02 B29C53/58 B32B37/12 (Advanced/Non-invention)

International class (IPC 1-7): C04B14/38 C08L3/02

CPC: Y10S428/913 B01F3/1214 B01F2003/125 B05B11/0037 B05B11/30 B05C1/0826 B05C1/0834 B05C3/18 B05C5/0245 B27N3/002 B27N3/007 B28B1/00 B28B1/52 B28B3/00 B28B3/02 B28B3/126 B28B3/20 B28B3/2645 B28B7/42 B28B11/00 B28B11/003 B28B11/008 B28B11/24 B28B11/245 B28B13/021 B28B13/06 B28B23/00 B28B23/0081 B28B23/0087 B28C7/02 B29C33/10 B29C33/20 B29C33/36 B29C39/003 B29C39/42 B29C43/00 B29C43/003 B29C43/02 B29C43/06 B29C43/08 B29C43/34 B29C43/36 B29C43/38 B29C44/0407 B29C45/0013 B29C49/0005 B29C51/002 B29C51/04 B29C51/10 B29C53/063 B29C53/58 B29C55/18 B29C67/202 B29C67/24 B29C67/242 B29C70/025 B29C70/12 B29C70/50 B29C71/0009 B29C2043/3433 B29C2043/3615 B29C2043/3621 B29C2043/3623 B29C2043/3689 B29C2043/5841 B29C2049/4608 B29C2795/007 B29K2003/00 B29K2005/00 B29K2089/00 B29K2093/00 B29K2105/12 B29K2105/16 B29L2024/00 B29L2031/608 B29L2031/712 B29L2031/7132 B31D1/005 B32B5/02 B32B13/02 B32B27/04 B32B27/20 B32B37/12 B32B37/144 B65D5/00 B65D11/02 B65D43/162 B65D65/38 B65D65/466 B65D2301/20 B65D2565/385 C04B7/527 C04B14/064 C04B16/02 C04B20/002 C04B20/0048 C04B22/002 C04B22/04 C04B24/00 C04B24/14 C04B24/38 C04B26/00 C04B26/02 C04B26/026 C04B26/28 C04B26/285 C04B28/00 C04B28/02 C04B38/0006 C04B40/00 C04B40/0032 C04B40/006 C04B40/0616 C04B41/45 C04B41/61 C08J9/12 C08J2303/00 C08L1/28 C08L1/286 C08L3/00 C08L3/02 C08L5/02 C08L5/12 C08L5/14 C08L89/06 C08L97/02 E05D1/02 E05Y2900/602 Y10T428/1348 Y10T428/1372 Y10T428/1376 Y10T428/24992 Y10T428/249961 Y10T428/249983 Y10T428/249986 Y10T428/249989 Y10T428/24999 Y10T428/249991 Y10T428/249992 Y02W30/97 Y02W90/11 B29C44/3402 B31B50/32 B31B2105/0022 B32B5/18 B32B1/02 B32B5/14 B32B2262/062 B32B2305/08 B32B2305/30 B32B2305/70 B32B2307/7246 B32B2317/20 B32B2439/70 C08J9/0085 Y02A40/961 B29C48/0011 B29C48/0017 B29C48/03 B29C48/15

European class: B01F3/12B2 B27N3/00B B27N3/00R B28B1/00 B28B1/52 B28B11/00 B28B11/00E B28B11/00E3 B28B11/24 B28B11/24D B28B13/02C B28B13/06 B28B23/00 B28B23/00Z B28B23/00Z1 B28B3/00 B28B3/02 B28B3/12C B28B3/20 B28B3/26E B28B7/42 B28C7/02 B29C33/36 B29C39/00B B29C39/42 B29C43/00B B29C43/02 B29C43/06 B29C43/08 B29C43/34 B29C43/36 B29C43/38 B29C44/04A

B29C45/00E B29C49/00B B29C51/00B B29C51/04 B29C51/10 B29C53/06B B29C55/18 B29C67/20C B29C67/22D1 B29C67/24 B29C67/24C B29C70/02A4 B29C70/12 B29C70/50 B29C71/00C B31B1/32 B31B17/00 B31D1/00H1 B32B13/02 B32B27/04 B32B27/20 B32B37/14B B32B5/02 B32B5/14 B32B5/18 B65D11/02 B65D43/16B B65D5/00 B65D65/38 B65D65/46C C04B14/06G C04B16/02 C04B20/00D2 C04B20/00F C04B22/00H C04B22/04 C04B24/00 C04B24/14 C04B24/38 C04B26/00 C04B26/02 C04B26/02B C04B26/28 C04B26/28B C04B28/00 C04B28/02 C04B38/00B C04B40/00 C04B40/00D1 C04B40/00D7 C04B40/06A2 C04B41/45 C04B41/61 C04B7/52H C08J9/00N C08J9/12 C08L1/28 C08L1/28F C08L3/00 C08L3/02 C08L5/02 C08L5/12 C08L5/14 C08L89/06 C08L97/02 E05D1/02 L01F3/12G L05B11/00B5 L05B11/30 L05C1/08P L05C1/08P2 L05C3/18 L05C5/02E L29C33/10 L29C33/20 L29C43/00 L29C43/06 L29C43/08 L29C43/34B L29C43/36C2 L29C43/36C2B L29C43/36C2B1 L29C43/36H2 L29C43/58D1 L29C47/00L4 L29C47/00L7 L29C47/02 L29C49/46B1A L29C53/58 L29C795/00D L29K105/12 L29K105/16 L29K3/00 L29K5/00 L29K89/00 L29K93/00 L29L24/00 L29L31/60C L29L31/712 L29L31/7132 L31B201/26A1A L31B217/08A L32B37/12 L65D301/20 L65D565/38Y7 M08J303/00 P05D1/02 P05Y900/602

US class: 106/162.51 106/164.01 106/205.01 106/206.1 106/217.01 106/287.35 106/400 536/102

Classification Explorer

Cited documents: WO9112186 A1, US5620510 A, US4623150 A, US4613627 A, US4243480 A, EP0304401 A2,

Forward Citations: WO9963015, WO0200750, US9890083, US9840066, US9828441, US9802866, US9701583, US9540810, US9475732, US9456931, US9410361, US9375899, US9339580, US9320656, US9243444, US9080372, US9027296, US8927622, US8915033, US8881494, US8658714, US8608018, US8604123, US8541074, US8501260, US8382888, US8268417, US8152510, US8087921, US7967904, US7553363, US7481645, US7235256, US7083673, US6878199, US6589327, US6478861, US6372819, US6090195, US2011210164, US2010280149, US2009258172, US2009238912, US2009218347, US2008090068, US2008070026, US2007148384, US2006255507, US2006110498, US2005147695, US2005120915, US2005089606, US2005025952, US2004265453, US2004177580, US2004077738, US2003216492, US10240089, US10196309, US10077597, EP1265957,

Abstract:
Compositions, methods, and systems for manufacturing articles, particularlycontainers and packaging materials, having a particle packed, highly inorganically filled, cellular matrix are disclosed. Suitable inorganically filled mixtures are prepared by mixing together a starch-based binder, a solvent, inorganic aggregates, and optimal admixtures, e.g., fibers, mold-releasing agents, rheology-modifying agents, plasticizers, coating materials, and dispersants, in the correct proportions to form an article which has the desired performance criteria. The inorganically filled mixtures have a predetermined viscosity and are heated between molds at an elevated temperature and pressure to produce form-stable articles having a desired shape and a selectively controlled cellular, structural matrix. The molded articles may be placed in a high humidity chamber to obtain the necessary flexibility for their intended use. The articles may be manufactured to have properties substantially similar to articles presently made from conventional materials like paper, paperboard, polystyrene, plastic, or other organic materials. They have especial utility in the mass-production of containers, particularly food and beverage containers.

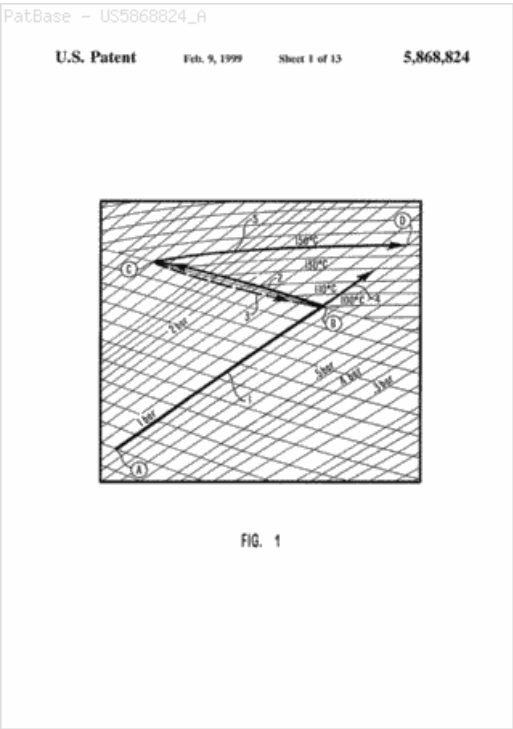

20) Family number: 33376868 (WO9737827A1) © PatBase

Title: METHODS FOR MANUFACTURING MOLDED SHEETS HAVING A HIGH STARCH CONTENT

Priority: US19960631676 19960409

Family:

Publication number	Publication date	Application number	Application date
DK1007320 T3	20051121	DK19970922292T	19970409
ES2246512 T3	20060216	ES19970922292T	19970409
WO9737827 A1	19971016	WO1997US05794	19970409

Probable Assignee: KHASHOGGI E IND

Assignee(s):(std)**:** KHASHOGGI E IND

Assignee(s): E KHASHOGGI IND ; E KHASHOGGI IND LLC ; E KHASHOGGI INDUSTRIES ; E KHASHOGGI INDUSTRIES LLC

Inventor(s):(std)**:** ONG SHAODE ; HODSON SIMON K ; CHRISTENSEN BRUCE J ; ANDERSEN PER J

Designated states: AL AM AT AU AZ BA BB BE BF BG BJ BR BY CA CH CN CU CZ DE DK EE ES FI FR GB GE GH GR HU IE IL IS IT JP KE KG KP KR KZ LC LK LR LS LT LU LV MC MD MG MK MN MW MX NL NO NZ PL PT RO RU SD SE

SG SI SK SZ TJ TM TR TT UA UG UZ VN YU

International class (IPC 8-9): B05B11/00 B27N3/00 B28B1/00 B28B1/52 B28B11/00 B28B23/00 B28B3/12 B28B3/20 B29C43/00 B29C43/06 B29C43/22 B29C43/24 B29C43/34 B29C43/46 B29C44/04 B29C45/00 B29C47/00 B29C47/50 B29C47/52 B29C47/88 B29C49/00 B29C49/06 B29C51/00 B29C51/04 B29C51/10 B29C53/06 B29C55/18 B29C67/24 B29C70/50 B29C71/00 B31B17/00 B32B13/02 B32B27/04 B32B27/20 B32B37/14 B32B5/02 B32B5/18 B32B9/00 B65D43/16 B65D65/38 B65D65/46 C04B16/02 C04B26/00 C04B26/02 C04B26/28 C04B28/00 C04B40/00 C08J3/02 C08J5/18 C08L1/28 C08L3/02 C08L5/12 E05D1/02 (Advanced/Invention);
B05C5/02 B29C43/08 B29C49/04 B29C51/08 B29C53/58 B29K1/00 B29L7/00 B32B37/12 (Advanced/Non-invention)

International class (IPC 1-7): B28B1/52 B28B23/00 B29C43/24 B29C47/00

CPC: Y02W30/97 Y02W90/11 B05B11/0037 B05B11/30 B05C5/0245 B27N3/002 B27N3/007 B28B1/00 B28B1/52 B28B3/126 B28B3/20 B28B11/00 B28B11/003 B28B23/00 B28B23/0081 B28B23/0087 B29C43/00 B29C43/003 B29C43/08 B29C43/22 B29C43/222 B29C43/24 B29C43/34 B29C43/46 B29C44/0407 B29C45/0013 B29C49/0005 B29C49/0047 B29C49/04 B29C49/06 B29C49/063 B29C51/002 B29C51/04 B29C51/08 B29C51/082 B29C51/10 B29C53/063 B29C53/58 B29C55/18 B29C67/24 B29C67/242 B29C70/50 B29C71/0009 B29C2043/3433 B29C2043/463 B29C2791/006 B29C2795/007 B29K2001/00 B29K2003/00 B29K2005/00 B29K2089/00 B29K2105/06 B29K2105/12 B29K2105/16 B29K2995/006 B29L2024/00 B29L2031/608 B29L2031/712 B29L2031/7132 B31D1/005 B32B5/02 B32B5/18 B32B9/00 B32B13/02 B32B27/04 B32B27/20 B32B37/00 B32B37/12 B65D43/162 B65D65/38 B65D65/466 B65D2565/385 C04B26/00 C04B26/02 C04B26/28 C08J5/18 C08J2303/02 C08J2323/02 C08L1/286 C08L3/02 C08L5/12 E05D1/02 E05Y2900/602 B31B50/32 B31B2105/0022 B32B9/04 B32B3/28 B32B9/02 B32B23/04 B32B23/22 B32B2307/7163 B32B2439/00 B32B37/144 Y02A40/961 B29C48/0017 B29C48/022 B29C48/05 B29C48/08 B29C48/09 B29C48/13 B29C48/15 B29C48/38 B29C48/465 B29C48/91

European class: B05B11/00B5 B27N3/00B B27N3/00R B28B1/00 B28B1/52 B28B11/00 B28B11/00E B28B23/00 B28B23/00Z B28B23/00Z1 B28B3/12C B28B3/20 B29C43/00B B29C43/22 B29C43/22B B29C43/24 B29C43/34 B29C43/46 B29C44/04A B29C45/00E B29C47/00B B29C47/50 B29C47/52B B29C49/00B B29C49/06B2B B29C51/00B B29C51/04 B29C51/10 B29C53/06B B29C55/18 B29C67/24 B29C67/24C B29C70/50 B29C71/00C B31B1/32 B31B17/00 B31D1/00H1 B32B13/02 B32B27/04 B32B27/20 B32B37/00 B32B37/14B B32B5/02 B32B5/18 B32B9/00 B65D43/16B B65D65/38 B65D65/46C C04B26/00 C04B26/02 C04B26/28 C08J5/18 C08L1/28F C08L3/02 C08L5/12 E05D1/02 L05B11/30 L05C5/02E L29C43/00 L29C43/08 L29C43/34B L29C43/46 L29C43/46A2 L29C47/00J10 L29C47/00J5 L29C47/00J6 L29C47/00L7 L29C47/02 L29C49/00F L29C49/04 L29C49/06 L29C51/04 L29C51/08 L29C51/08B L29C51/10 L29C53/58 L29C791/00E4 L29C795/00D L29K1/00 L29K105/06 L29K105/12 L29K105/16 L29K3/00 L29K5/00 L29K89/00 L29K995/00F14B L29L24/00 L29L31/60C L29L31/712 L29L31/7132 L31B201/26A1A L31B217/08A L32B37/12 L65D565/38Y7 M08J303/02 M08J323/02 P05D1/02 P05Y900/602

Classification Explorer

Cited documents: US5626954 A, US5508072 A,

Forward Citations: US7858684, EP1502726, EP1502726, EP0964000,

Abstract:
Methods for manufacturing sheets having a starch-bound matrix reinforced with fibers and optionally including an inorganic mineral filler. Suitable mixtures for forming the sheets are prepared by mixing together (10) water, unmodified and ungelatinized starch granules, a cellulosic ether, fibers, and optionally an inorganic mineral filler in the correct proportions to form a sheet having desired properties. The mixtures are formed into sheets by passing them between one or more sets of heated rollers (40) to form green sheets. The heated rollers (40) cause the cellulosic ether to form a skin on the outer surfaces of the sheet that prevents the starch granules from causing the sheet to adhere to the rollers (40) upon gelation of the starch. The green sheets are passed between heated rollers (50) to gelatinize the starch granules, and then to dry the sheet by removing a substantial portion of the water by evaporation.

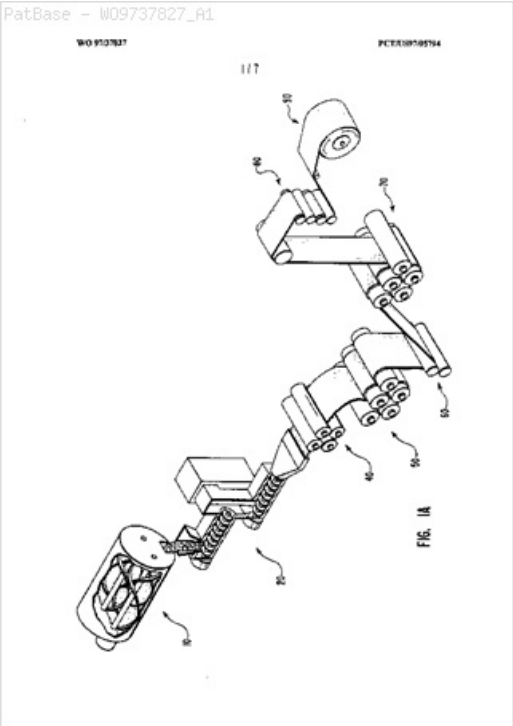

21) Family number: 33376869 (WO9737842A1)

© PatBase

Title: COMPOSITIONS HAVING A HIGH UNGELATINIZED CONTENT

Priority: US19960629539 19960409

Family:

Publication number	Publication date	Application number	Application date
WO9737842 A1	19971016	WO1997US05934	19970409

Probable Assignee: KHASHOGGI E IND

Assignee(s):(std)**:** KHASHOGGI E IND

Assignee(s): E KHASHOGGI IND ; E KHASHOGGI INDUSTRIES

Inventor(s):(std)**:** ANDERSEN PER JUST ; CHRISTENSEN BRUCE J ; HODSON SIMON K ; ONG SHAODE

Inventor(s): ANDERSEN PER J

Designated states: AL AM AT AU AZ BA BB BE BF BG BJ BR BY CA CH CN CU CZ DE DK EE ES FI FR GB GE GH GR HU IE IL IS IT JP KE KG KP KR KZ LC LK LR LS LT LU LV MC MD MG MK MN MW MX NL NO NZ PL PT RO RU SD SE SG SI SK SZ TJ TM TR TT UA UG UZ VN YU

International class (IPC 8-9): B05B11/00 B27N3/00 B28B1/00 B28B1/52 B28B11/00 B28B23/00 B28B3/12 B28B3/20 B29C43/00 B29C43/02 B29C43/06 B29C43/08 B29C43/22 B29C43/24 B29C43/34 B29C43/36 B29C43/46 B29C44/04 B29C45/00 B29C47/00 B29C47/50 B29C47/52 B29C49/00 B29C49/06 B29C51/00 B29C51/04 B29C51/10 B29C53/06 B29C55/18 B29C67/24 B29C70/50 B29C71/00 B31B17/00 B32B13/02 B32B27/04 B32B27/20 B32B37/14 B32B5/02 B32B5/18 B32B9/00 B65D43/16 B65D65/38 B65D65/46 C04B16/02 C04B26/00 C04B26/02 C04B26/28 C04B28/00 C04B40/00 C08J5/04 C08J5/18 C08K3/00 C08L1/26 C08L1/28 C08L3/00 C08L3/02 C08L5/02 C08L5/12 C08L5/14 C08L89/06 C08L97/02 E05D1/02 (Advanced/Invention);
B05C5/02 B29C49/04 B29C51/08 B29C53/58 B32B37/12 (Advanced/Non-invention)

International class (IPC 1-7): B32B5/16 C08L3/02

CPC: Y10S428/906 Y10S977/707 B05B11/0037 B05B11/30 B05C5/0245 B27N3/002 B27N3/007 B28B1/00 B28B1/52 B28B3/126 B28B3/20 B28B11/00 B28B11/003 B28B23/00 B28B23/0081 B28B23/0087 B29C43/00 B29C43/003 B29C43/02 B29C43/08 B29C43/22 B29C43/222 B29C43/24 B29C43/34 B29C43/46 B29C44/0407 B29C45/0013 B29C49/0005 B29C49/0047 B29C49/04 B29C49/06 B29C49/063 B29C51/002 B29C51/04 B29C51/08 B29C51/082 B29C51/10 B29C53/063 B29C53/58 B29C55/18 B29C67/24 B29C67/242 B29C70/50 B29C71/0009 B29C2043/3433 B29C2043/463 B29C2049/4608 B29C2791/006 B29C2795/007 B29K2001/00 B29K2003/00 B29K2005/00 B29K2089/00 B29K2105/06 B29K2105/12 B29K2105/16 B29K2995/006 B29L2024/00 B29L2031/608 B29L2031/712 B29L2031/7132 B31D1/005 B32B5/02 B32B5/18 B32B9/00 B32B13/02 B32B27/04 B32B27/20 B32B37/12 B32B37/144 B65D43/162 B65D65/38 B65D65/466 B65D2565/385 C04B26/02 C04B26/28 C04B26/285 C04B40/00 C04B2111/00612 C04B2111/00948 C08J2303/02 C08J2323/02 C08L1/28 C08L1/286 C08L3/00 C08L3/02 C08L5/02 C08L5/12 C08L5/14 C08L89/06 C08L97/02 E05D1/02 E05Y2900/602 Y10T428/1372 Y10T428/1376 Y10T428/1397 Y10T428/15 Y10T428/24446 Y10T428/24694 Y10T428/249986 Y10T428/31971 Y02W30/97 Y02W90/11 B31B50/32 B31B2105/0022 B32B9/04 B32B3/266 B32B3/28 B32B9/02 B32B23/04 B32B23/22 B32B2307/518 B32B2307/716 B32B2307/7163 B32B2439/00 C08J5/18 B29C48/001 B29C48/0011 B29C48/0017 B29C48/0018 B29C48/0019 B29C48/0022 B29C48/0023 B29C48/022 B29C48/05 B29C48/07 B29C48/08 B29C48/13 B29C48/38 B29C48/465

European class: B05B11/00B5 B27N3/00B B27N3/00R B28B1/00 B28B1/52 B28B11/00 B28B11/00E B28B23/00 B28B23/00Z B28B23/00Z1 B28B3/12C B28B3/20 B29C43/00B B29C43/02 B29C43/22 B29C43/22B B29C43/24 B29C43/34 B29C43/46 B29C44/04A B29C45/00E B29C47/00B B29C47/00J5 B29C47/50 B29C47/52B B29C49/00B B29C49/06B2B B29C51/00B B29C51/04 B29C51/10 B29C53/06B B29C55/18 B29C67/24 B29C67/24C B29C70/50 B29C71/00C B31B1/32 B31B17/00 B31D1/00H1 B32B13/02 B32B27/04 B32B27/20 B32B37/14B B32B5/02 B32B5/18 B32B9/00 B65D43/16B B65D65/38 B65D65/46C C04B26/02 C04B26/28 C04B26/28B C04B40/00 C08J5/18 C08L1/28 C08L1/28F C08L3/00 C08L3/02 C08L5/02 C08L5/12 C08L5/14 C08L89/06 C08L97/02 E05D1/02 L05B11/30 L05C5/02E L29C43/00 L29C43/08 L29C43/34B L29C43/46 L29C43/46A2 L29C47/00J10 L29C47/00J4 L29C47/00J5 L29C47/00L L29C47/00L13 L29C47/00L4 L29C47/00L7 L29C47/00L8 L29C47/00L9 L29C49/00F L29C49/04 L29C49/06 L29C49/46B1A L29C51/04 L29C51/08 L29C51/08B L29C51/10 L29C53/58 L29C791/00E4 L29C795/00D L29K1/00 L29K105/06 L29K105/12 L29K105/16 L29K3/00 L29K5/00 L29K89/00 L29K995/00F14B L29L24/00 L29L31/60C L29L31/712 L29L31/7132 L31B201/26A1A L31B217/08A L32B37/12 L65D565/38Y7 M04B111/00T6 M04B111/00T66 M08J303/02 M08J323/02 P05D1/02 P05Y900/602

Classification Explorer

Cited documents: US5376320 A,

Forward Citations: US8673398, US8349443, US8147979, US8048257, US7967904, US7960452, US7083673, US6878199, RU2487096, GB2564960,

Abstract:
Compositions and methods for manufacturing sheets having a starch-bound matrix reinforced with fibers and optionally including an inorganic mineral filler. Suitable mixtures for forming the sheets are prepared by mixing together water, unmodified and ungelatinized starch granules, a cellulosic ether, fibers, and optionally an inorganic mineral filler in the correct proportions to form a sheet having desired properties. The mixtures are formed into sheets by passing them between one or more sets of heated rollers to form green sheets. The heated rollers cause the cellulosic ether to form a skin on the outer surfaces of the sheet that prevents the starch granules from causing the sheet to adhere to the rollers upon gelation of the starch. The green sheets are passed between heated rollers to gelatinize the starch granules, and then to dry the sheet by removing a substantial portion of the water by evaporation. The starch and cellulosic ether form the binding matrix of the sheets with the fibers and optional inorganic filler dipersed throughout the binding matrix. The starch-bound sheets can be cut, rolled, pressed, scored, perforated, folded, and glued to fashion articles from the sheets much like paper or paperboard. The sheets are particularly useful in the mass production of containers, such as food and beverage containers.

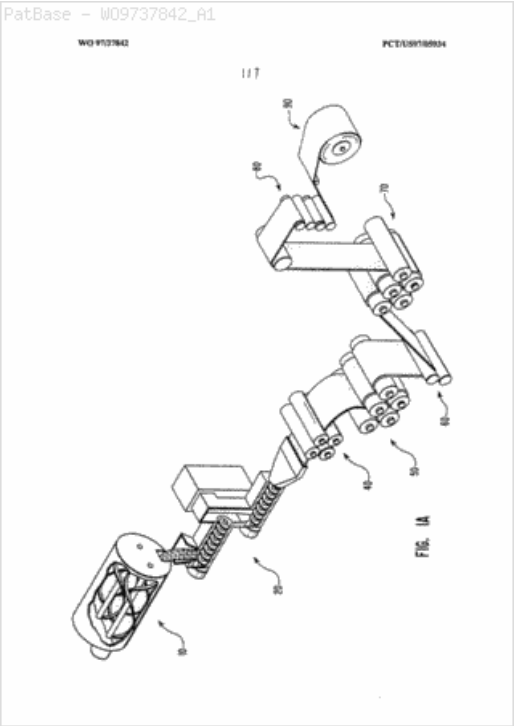

22) Family number: 52989915 (WO13039427A1) © PatBase

Title: METHOD OF MANUFACTURING POROUS CONSTRUCTION ITEMS

Priority: RU20110131733 20110729 EP20120832083 20120830 WO2012RU00716 20120830

Family:

Publication number	Publication date	Application number	Application date
DE602012042860 D1	20180315	DE201260042860T	20120830
EP2738149 A1	20140604	EP20120832083	20120830
EP2738149 A4	20150527	EP20120832083	20120830
EP2738149 B1	20180214	EP20120832083	20120830
ES2669049 T3	20180523	ES20120832083T	20120830
RU2469008 C1	20121210	RU20110131733	20110729
WO13039427 A1	20130321	WO2012RU00716	20120830

Probable Assignee: KOKAYA EDUARD GRIGORIEVICH

Assignee(s):(std)**:** KOKAJA EHDUARD GRIGOR EVICH ; KOKAJA IL JA EHDUARDOVICH ; KOKAYA EDUARD GRIGORIEVICH ; KOKAYA ILYA EDUARDOVICH ; MCHEDLISHVILI MEDEYA MIKHAILOVNA ; MCHEDLISHVILI MEDEJA MIKHAJLOVNA ; PRIBIL MEDEYA MIKHAILOVNA

Inventor(s):(std)**:** KOKAYA EDUARD GRIGORIEVICH ; KOKAYA ILYA EDUARDOVICH ; MCHEDLISHVILI MEDEYA MIKHAILOVNA ; PRIBIL MEDEYA MIKHAILOVNA ; MCHEDLISHVILI MEDEJA MIKHAJLOVNA ; KOKAJA IL JA EHDUARDOVICH ; KOKAJA EHDUARD GRIGOR EVICH

Inventor(s): KOKAJA EHDUARD GRIGOR'EVICH ; KOKAJA IL'JA EHDUARDOVICH ; PRIBIL MEDEYA MIKHAILOVNA MOSCOW

Agent(s): BUCHER RALF DIPL ING UNIV; BUCHER RALF CHRISTIAN; MARTIN VICTORIA SOFIA; APARINA TATIANA VIKTOROVNA

Designated states: AE AG AL AM AO AT AU AZ BA BB BE BF BG BH BJ BN BR BW BY BZ CA CF CG CH CI CL CM CN CO CR CU CY CZ DE DK DM DO DZ EC EE EG ES FI FR GA GB GD GE GH GM GN GQ GR GT GW HN HR HU ID IE IL IN IS IT JP KE KG KM KN KP KR KZ LA LC LI LK LR LS LT LU LV LY MA MC MD ME MG MK ML MN MR MT MW MX MY MZ NA NE NG NI NL NO NZ OM PE PG PH PL PT QA RO RS RU RW SC SD SE SG SI SK SL SM SN ST SV SY SZ TD TG TH TJ TM TN TR TT TZ UA UG US UZ VC VN ZA ZM ZW

International class (IPC 8-9): C04B33/02 C04B33/32 C04B38/08 (Advanced/Invention)

CPC: C04B33/32 C04B2235/3201 C04B2235/3206 C04B2235/3208 C04B2235/3232 C04B2235/3272 C04B2235/5427 C04B2235/5472 C04B2235/6565 C04B2235/6567 C04B2235/721 C04B2235/727 C04B2235/96 C04B2235/9607 B28B5/04 B28B11/24 F27B9/16 F27B17/0041 Y02P40/63 Y02P40/65 C04B38/00 C04B2111/00905

Classification Explorer

Cited documents: US4208367 A, US4208367 A, RU2379251 C1, RU2351554 C1, RU2351554 C1, RU2334718 C1, RU2326847 C1, RU2309924 C1, RU2268248 C1, RU2268248 C1, RU2168130 C2, RU2168130 C2, RU2132834 C1, RU2046772 C1, EP2129637 B1, EP0225074 A2, EP0225074 A2,

Abstract:
The invention relates to a method of manufacturing porous construction items, such as bricks, ceramic tiles, roof tiles, large-sized wall blocks, pavement items etc. The technical result of the invention is a reduction in energy consumption while preserving the physicochemical properties. The method of manufacturing porous construction items from natural clay raw material that is capable of swelling comprises the preparation of the raw material, moulding, two-stage heating with retention until swelling occurs, and stabilization. Moreover, the first heating stage takes place before the moulding and is carried out simultaneously with the transport of the raw material to the mould filling zone. The moulding takes place in a mould designed as a muffle furnace with a lid, and the second heating stage occurs at a temperature of no less than 1250 degrees centigrade for no less than 10 minutes. Stabilisation occurs in a tilted tunnel furnace, wherein the inside temperature at the entry is no less than 900 degrees centigrade with further cooling of the finished product at a rate of no more than 120 degrees/hour so that the items at the exit are cooled to no more than 30-40 degrees centigrade

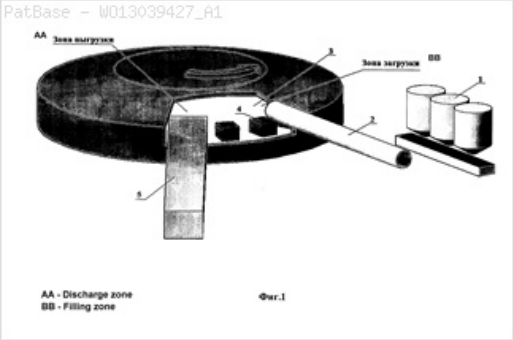

23) Family number: 641931 (FR1564693A)

© PatBase

Priority: FR19680140427 19680219

Family:

Publication number	Publication date	Application number	Application date
FR1564693 A	19690425	FR19680140427	19680219

International class (IPC 8-9): B28B11/14 B28B11/16 B28B11/18 B28B3/12 (Advanced/Invention); B28B11/00 B28B11/14 B28B3/00 (Core/Invention)

International class (IPC 1-7): B28B3/12

CPC: B28B3/126 B28B11/14 B28B11/161 B28B11/18

European class: B28B11/14 B28B11/16A B28B11/18 B28B3/12C

Classification Explorer

Forward Citations: EP0115958, EP0115957,

Abstract:
Source: FR1564693A [FR] (Claim 1) 1. Une methode pour le formage d'une bande homogene et continue de matiere de composition ceramique, ladite bande etant adaptee pour etre decoupee en flans dont on fabrique a la presse des articles de ceramique, methode caracterisee par les phases suivantes: melange a la machine d'une charge de matiere de composition ceramique pour former un melange uniforme de matiere fragmentee; broyage de ladite matiere fragmentee par pilonnage sous pression tout en amenant ladite matiere entre deux cylindres a pression de facon a former avec cette matiere une masse consistante puis pulverisation et criblage de la masse rendue compacte pour fournir une matiere broyee de calibre de particule determine; alimentation avec ladite matiere broyee des cylindres a pression de formage de bandes; et compression de ladite matiere entre lesdits cylindres a pression de formage de bande pour former une bande mobile homogene et continue de matiere de composition ceramique: a. La phase d'humidification de ladite matiere premelangee de sorte que l'humidite de la matiere broyee de calibre de particule determine soit de 5 a 6 percent en poids; b. La phase de pulverisation et de criblage de ladite matiere fournit un calibre de particule sensiblement entre 8 et 100 mesh; c. La phase de modification des pressions de pilonnage de facon a conserver a la bande de matiere formee et continue une durete Shore dans l'intervalle 45 a 55; d. La phase de guidage de ladite bande continue et mobile de matiere sur un parcours vertical descendant depuis ledit cylindre de formage de bande; e. La phase d'application d'une pression laterale a la bande mobile de matiere de facon a assurer la continuite de la bande sur ledit parcours vertical; f. La phase de decoupage de ladite bande continue et mobile de matiere en flans separes de matiere pendant qu'elle se deplace sur ledit parcours vertical; g. La face de reception desdits flans de matiere et du deplacement intermittent desdits flans sur un parcours horizontal; h. La phase de decoupage a la presse d'une masse de ceramique pressee provenant desdits flans tout en laissant a la peripherie de ladite masse pressee une bavure a racler; i. La phase de recuperation de ladite bavure a racler et de renvoi de ladite bavure a racler recuperee a l'ecoulement de matiere premelangee pour pulverisation et criblage de facon a fournir la matiere broyee au calibre voulu.

Machine translation: (Claim 1) 1. A method for forming a homogeneous and continuous strip of material of ceramic composition, said strip being adapted to be cut into blanks which are made to the press articles of ceramic, method characterized by the following phases: a mixture of the machine a load of ceramic material composition to form a uniform mixture of fragmented material; grinding said material fragmented tamping pressure while bringing said material between two cylinders is pressure to form this matter with a mass consistent screening and then spray of the mass compacted to provide a ground material Template particle determined; supply with said ground material of the cylinders has forming pressure of bands; and compression of said matter between said cylinders has pressure band forming to form a strip mobile homogeneous and continuous ceramic composition of matter: a. Moistening phase of said premixed material so that the moisture of the ground material of particle size is determined from 5 to 6 percent by weight b. Phase spraying and screening said material provides a particle size of approximately 8 to 100 mesh; c. The phase change pressures shelling of a way to keep the strip material formed and continues a Shore hardness in the range 45 to 55 d. The guidance phase of said continuous strip and mobile of matter on a course descending vertical from said cylinder band forming; e. The implementation phase of a lateral pressure of a moving web of material to ensure the continuity of the band on said vertical path f. Decoupage phase of said web and mobile material blanks separated from matter as it moves about said vertical path; g. The face of said sheet material reception and displacement Intermittent said blanks on a horizontal path h. Phase blanking of a mass of ceramic Pressed blanks from said while leaving at the periphery of said body has a burr Pressed scrape; i. The recovery phase of said flash was scraping and removal of said flash has recovered scrape the flow of premixed material for spraying and screening to provide the ground material to the desired size.

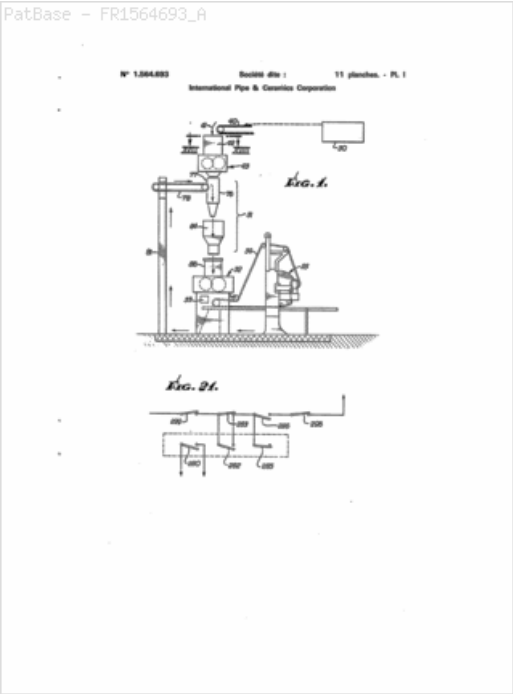

24) Family number: 10970958 (EP0716908A1)

© PatBase

Title: PROCESS AND APPARATUS FOR THE PRODUCTION OF CERAMIC PRODUCTS VERFAHREN UND VORRICHTUNG ZUR HERSTELLUNG VON KERAMISCHEN PRODUKTEN <TI

Priority: DE19944444774 19941215 DE19955008048 19951207

Family:

Publication number	Publication date	Application number	Application date
AT190897 E	20000415	AT19950119298T	19951207
DE4444774 C1	19960307	DE19944444774	19941215
DE59508048 D1	20000427	DE19955008048	19951207
EP0716908 A1	19960619	EP19950119298	19951207
EP0716908 B1	20000322	EP19950119298	19951207
ES2146281 T3	20000801	ES19950119298T	19951207

Probable Assignee: STROBEL KLAUS DIPL ING 95100 SELB DE

Assignee(s):(std)**:** STROBEL KLAUS ; STROBEL KLAUS DIPL ING

Assignee(s): STROBEL KLAUS DIPL ING 95100 SELB DE

Inventor(s):(std)**:** STROBEL KLAUS ; STROBEL KLAUS DIPL ING

Designated states: AT CH DE ES FR GB IT LI

International class (IPC 8-9): B01D46/00 B01D46/24 B01J2/00 B28B1/16 B28B17/02 B28B3/00 B28C1/14 C04B33/02 C04B35/628 E04F17/02 (Advanced/Invention);
B01D46/00 B01D46/24 B01J2/00 B28B1/16 B28B17/00 B28B3/00 B28C1/00 C04B33/02 C04B35/626 E04F17/00 (Core/Invention)

International class (IPC 1-7): B01J2/00 B28B1/16 B28B3/00 B28C1/14 B28C3/00 C04B33/02 C04B35/628 C04B35/64 E04F17/02 F26B3/08

CPC: B01D46/0001 B01D46/2407 B28B3/003 B28B17/026 B28C1/14 C04B33/04 C04B33/30 C04B35/6263 C04B35/62695 C04B35/62805 C04B35/6365 C04B2235/5427 C04B2235/5436 C04B2235/5472

European class: B01D46/00B B01D46/24F B01D46/24F2 B01D46/24F6 B28B17/02C B28B3/00B B28C1/14 C04B33/04 C04B33/30 C04B35/626A10B C04B35/626A24 C04B35/628B2 C04B35/636B L01D267/20H M04B235/54D2 M04B235/54D4 M04B235/54F2

Classification Explorer

Cited documents: FR2509659 A2, DE4407299 C1, DE4314285 A1, DE3908172 A1, DE2829054 A1, DE2825611 C2, DE2552157 A1, DE1947099 A1,

Forward Citations: WO9837033, FR2759723, EP1895072, EP1895072, EP1009722, EP0773199, DE19846782, DE19629413,

Abstract:
Prodn. of ceramic products, esp. thin-walled pipes, comprises preparing a ceramic mold consisting of a plastic component, esp. a clay mineral material, and an inert component, esp. a schamotte material, in which the mould is isostatically pressed and pressed into a moulding and then calcined. The improvement is that the prepn. process to form the mould comprises: (a) comminuting an inert component to an ave. particle size (d50) of 0.2-0.5 mm; (b) likewise comminuting the plastic component to an ave. particle size (d50) of 1-5 microns; (c) mixing the inert component with water; (d) intensively mixing the plastic component with the inert component; (e) encapsulating and granulating the inert component completely in the plastic component; and (f) drying the damp mould to a moisture of 4-8 percent. An appts. for carrying out the above process is also claimed.

PatBase - EP0716908_A1
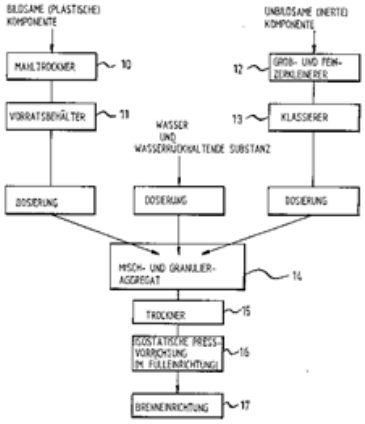
Fig.1