Diego Gonzalez

1) Family number: 48432055 (CA2713249A)

Title: MANURE SEPARATOR

Abstract: The present invention relates to a device for separating moisture out of a material, such as manure, paper pulp or the like. The device of the invention comprises two or more perforated draining rollers having a main longitudinal axis and two or more pressing rolls having an axis parallel to the main longitudinal axis of the draining rollers. Each pressing roll is pressed against only one draining roller thereby forming a pressing way between the pressing rolls and the draining rollers to press the moisture out of the material flowing through the pressing way. The device also comprises a positive drive system for rotating just the draining rollers.The pressing rolls are driven by a friction with the draining rollers, thereby ensuring that the device does not stall.

Classifications:
International (IPC 8-9): A01C3/00 B30B9/20 B30B9/26 D21C9/18 (Advanced/Invention)

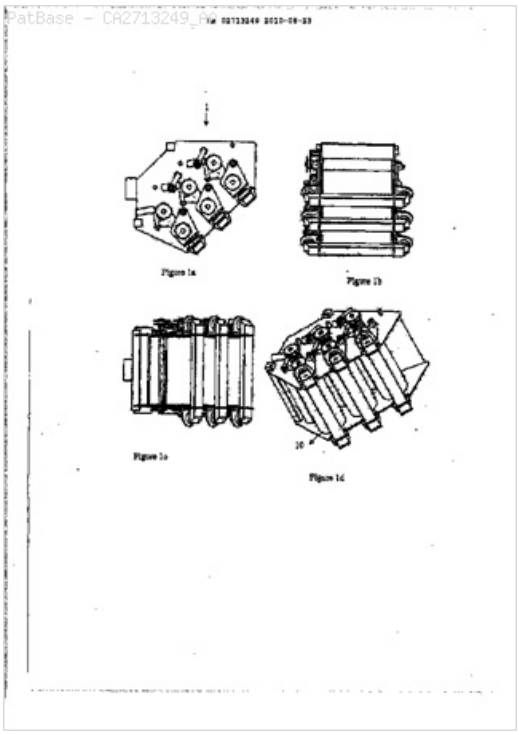

Family:

Publication number	Publication date	Application number	Application date
CA2713249 AA	20110221	CA20102713249	20100823

Priority:
US20090235737P 20090821 CA20102713249 20100823

Probable Assignee: DAIRY LANE SYSTEMS LTD
Assignee(s): (std): DAIRY LANE SYSTEMS LTD
Assignee(s): VAN LOGTENSTEIN MICHAEL
Inventor(s): (std): VAN LOGTENSTEIN MICHAEL
Agent(s): GRAHAM LORELEI G

2) Family number: 30715111 (US2004129611A)

Title: MANURE SEPARATOR

Abstract: A novel separator housed within a shell for the separations of solid and liquid components from a slurry. The separator has two stages, a first static screen and rotating brush assembly section and a second stage, with a screen and a roller press and brush assembly. The slurry is pumped into the separator through a weir box. The slurry flows into the first stage and most of the liquid component flows into a sump located below the two stages. The solid component is then directed into the second stage where the rollers squeeze remaining liquids from the solid component. The brushes then direct the remaining solid component of the slurry into a solids discharge area.

Classifications:
International (IPC 8-9): B01D29/03 B01D29/64 B02C19/00 F26B5/14 (Advanced/Invention);
B01D29/01 B01D29/62 B02C19/00 F26B5/00 (Core/Invention)
International (IPC 1-7): B07B1/06 B07B1/28
CPC: B01D29/52 B01D29/6415 B01D29/82 F26B5/14 B01D29/035 F26B2200/18
European: B01D29/03D F26B5/14 R26B200/18

US: 209/234 209/274 209/274S 209/276 209/276S 210/396 210/413 241/73

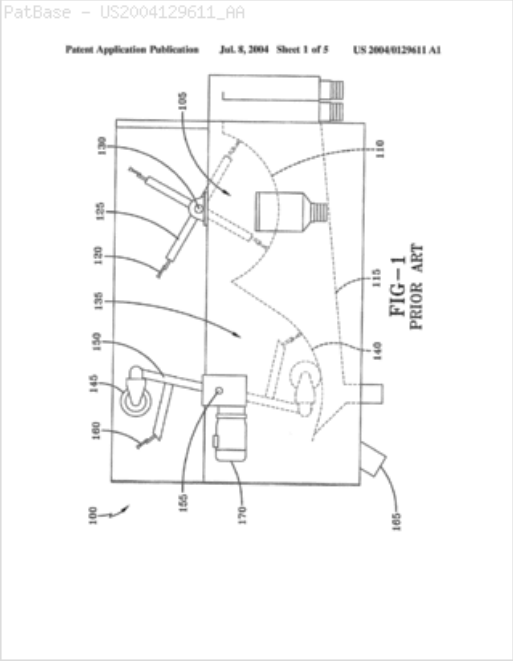

Family:

Publication number	Publication date	Application number	Application date
US2004129611 AA	20040708	US20030665790	20030918
US7051962 BB	20060530	US20030665790	20030918

Priority:

US20020412150P 20020919 US20030665790 20030918

Probable Assignee: NUTRIENT CONTROL SYSTEMS INC

Assignee(s): (std): NUTRIENT CONTROL SYSTEMS INC

Inventor(s): (std): KIPE H KENNETH ; RENSCH TIMOTHY N ; WHITSEL BRADFORD H

Agent(s): MCNEES WALLACE AND NURICK LLC

3) Family number: 57769132 (CN203938609U) © PatBase

Title: LOW-NOISE PIG MANURE SOLID-LIQUID SEPARATOR

Abstract: The utility model relates to a low-noise pig manure solid-liquid separator comprising a frame, and a drying machine, a first spiral conveyor, a cyclone dehumidifier and a hot blast furnace which are arranged on the frame, wherein the drying machine is connected with the frame by virtue of a roller; a driving motor is arranged at the lower end of the drying machine and is connected with the drying machine by virtue of a belt strip; one end of the drying machine is communicated with the cyclone dehumidifier; the lower end of the cyclone dehumidifier is connected with the first spiral conveyor; the first spiral conveyor is fixed with the frame by virtue of a supporting rod; the hot blast furnace is fixedly arranged at the lower end of the left side of the drying machine by virtue of a screw rod; the upper end of the left side of the drying machine is connected with a second spiral conveyor; the second spiral conveyor is connected with a hopper by virtue of a feed pipe. The low-noise pig manure solid-liquid separator is characterized in that a group of sound insulation boards are arranged on two sides of the drying machine. The low-noise pig manure solid-liquid separator disclosed by the utility model can be used for effectively preventing noises generated in operation.

Classifications:

International (IPC 8-9): C05F3/06 (Advanced/Invention)

CPC: Y02A40/208

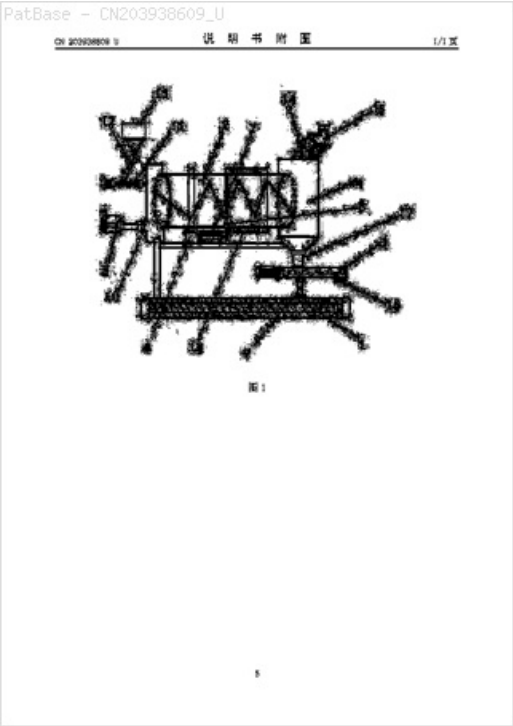

Family:

Publication number	Publication date	Application number	Application date
CN203938609 U	20141112	CN201420291071U	20140604

Priority:

CN201420291071U 20140604

Probable Assignee: HANGZHOU HENGXI IND DESIGN CO LTD

Assignee(s): (std)**:** HANGZHOU HENGXI IND DESIGN CO LTD

Assignee(s): HANGZHOU HENGXI INDUSTRIAL DESIGN CO ; INDUSTRIAL DESIGN CO LTD HANGZHOU HENG DILUTE

Inventor(s): (std)**:** XIANG GUANGTING

4) Family number: 57769147 (CN203938610U) © PatBase

Title: PIG MANURE SOLID-LIQUID SEPARATOR WITH VIBRATION DEVICE

Abstract: The utility model relates to a pig manure solid-liquid separator with a vibration device. The pig manure solid-liquid separator comprises a rack, wherein a dryer, a first spiral conveyer, a cyclone dehumidifier and a hot air furnace are arranged on the rack; the dryer is connected with the rack through a roller wheel; a driving motor is arranged at the lower end of the dryer and is connected with the dryer through a belt strip; the first spiral conveyer is connected to the lower end of the cyclone dehumidifier and is fixed with the rack through a supporting rod; the hot air furnace is fixed at the lower end of the left side of the dryer through a screw rod; a second spiral conveyer is connected to the upper end of the left side of the dryer and is connected with a hopper through a feeding pipe. The pig manure solid-liquid separator is mainly characterized in that a vibrator is mounted on one side of the hopper and is fixed with the hopper through a base. According to the pig manure solid-liquid separator provided by the utility model, a power supply of the vibrator is switched on, so that the vibrator drives the hopper to vibrate for dropping wet materials blocked on the hopper into the second spiral conveyer in a vibration manner.

Classifications:
International (IPC 8-9)**:** C05F3/06 (Advanced/Invention)
CPC: Y02A40/208

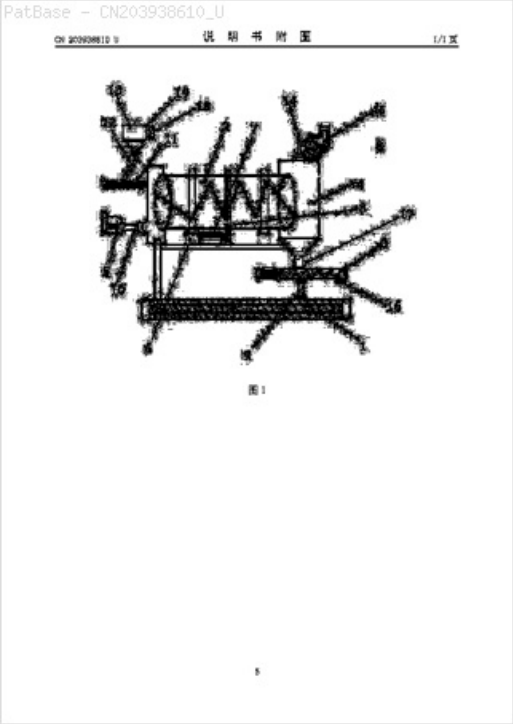

Family:

Publication number	Publication date	Application number	Application date
CN203938610 U	20141112	CN201420291129U	20140604

Priority:

CN201420291129U 20140604

Probable Assignee: HANGZHOU HENGXI IND DESIGN CO LTD

Assignee(s): (std): HANGZHOU HENGXI IND DESIGN CO LTD

Assignee(s): HANGZHOU HENGXI INDUSTRIAL DESIGN CO ; INDUSTRIAL DESIGN CO LTD HANGZHOU HENG DILUTE

Inventor(s): (std): XIANG GUANGTING

5) Family number: 74103226 (US2019119174A)

© PatBase

Title: METHOD AND SYSTEM FOR COMPOUNDING FERTILIZER FROM MANURE WITHOUT NUTRIENT EMISSION

Abstract: To produce fertilizer, a system and method concentrates manure slurry in a mechanical vapor recompression evaporator ("MVR") having a heat exchanger. The MVR receives the manure slurry within a first side to evaporate ammonia laden-water vapor from the slurry, leaving a nutrient concentrate. A compressor raises the evaporated ammonia-laden water vapor to a higher energy state. Within a second side of the heat exchanger, the compressed water vapor conveys heat to the slurry. Ammonia-laden water condenses in the second side at a process temperature to be conveyed to an ammonia stripping tower where the ammonia-laden water is dispersed into ammonia-laden water droplets. In the tower, a flow of air is directed across a surface of the ammonia-laden water droplets, the process temperature having been selected to promote the escape of ammonia gas from the ammonia-laden water droplets, the flow of air provided to entrain ammonia gas in the flow.

Classifications:

International (IPC 8-9): A01C3/02 B01D1/28 B01D19/00 B01D21/26 B01D5/00 C02F1/20 C05C3/00 C05F17/00 C05F17/02 C05F3/00 C05F3/06 (Advanced/Invention)

CPC: C05C3/00 C05F3/00 C05F17/0258 C05F3/06 C05F17/0036 B01D21/262 B01D19/0005 B01D1/289 B01D5/006 B01D1/2881 C05F17/0045 A01C3/023 C05F17/0264 C05F17/0018 A01C3/028 C02F1/041 C02F1/048 C02F1/20 C02F1/385 C02F9/00 C02F11/04 C02F2101/16 C02F2103/20

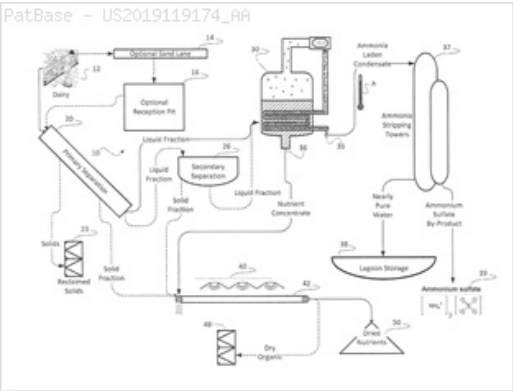

Family:

Publication number	Publication date	Application number	Application date
US2019119174 AA	20190425	US20170792442	20171024
US2019119177 AA	20190425	US20180054895	20180803
US2019119179 AA	20190425	US20180055500	20180806

Priority:

US20170792442 20171024 US20180054895 20180803 US20180055500 20180806

Probable Assignee: DARITECH INC

Assignee(s): (std): DANTECH INC ; DARITECH INC

Inventor(s): (std): DEWAARD DAVID ; KLAPPER MICHAEL ; MCCORT JOSH

6) Family number: 33976376 (US2006273048A) © PatBase

Title: INTERNALLY FED ROTARY SCREEN MANURE SEPARATOR

Abstract: Systems and methods for separating manure into a solid fraction and a liquid fraction, and optionally further separating the liquid fraction to capture a sand-rich second solid fraction and a second liquid fraction. Some separators have an adjustable inclination, forcing the manure passage to be slightly up hill, with an overflow box capturing and re-feeding excess manure inflow. One system includes an internally fed rotary screen separator having a perforated outer tube, the perforations being holes less than about 3/16 inch diameter. The outer tube can include spiral inner flights which may be interrupted near the discharge end to allow free fluid to flow back into the separator. The manure can be fed into an inlet conduit having an adjustable angle discharge slot. Some outer tubes have non-perforated end regions serving as the foundation for drive tracks. The solid fraction discharge can be further dewatered in a roller press. Scrape barn, flush barn, sand bedding, straw bedding, and other manure may be handled using these systems and methods.

Classifications:
International (IPC 8-9): A01K1/01 B01D33/06 B04B3/00 (Advanced/Invention); A01K1/01 B01D33/06 B04B3/00 (Core/Invention)
CPC: Y02P20/145 A01C3/00 B01D33/11 C05F3/06 Y02A40/208 B01D33/72 B01D33/76 B01D33/802
European: A01C3/00 B01D33/11 C05F3/06
US: 210/369 210/369S 210/781

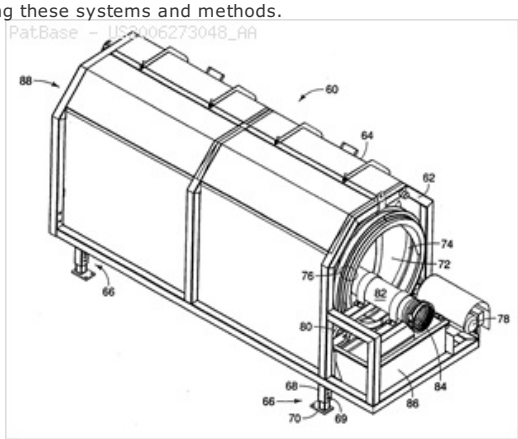

Family:

Publication number	Publication date	Application number	Application date
CA2509966 AA	20061201	CA20052509966	20050615
US2006273048 AA	20061207	US20050153661	20050615

Priority:
US20050686239P 20050601 CA20052509966 20050615 US20050153661 20050615

Probable Assignee: ACCENT MFG INC

Assignee(s): (std): ACCENT MFG INC

Assignee(s): DEWAARD DAVE ; DOYLE KERRY ; SIDHU BALBIR ; ACCENT MANUFACTURING INC ; ACCENT MFG

Inventor(s): (std): DEWAARD DAVE ; DOYLE KERRY ; SIDHU BALBIR

Agent(s): SIM AND MCBURNEY; CRAIG TAYLOR LAW OFFICE PLLC

7) Family number: 50661447 (US2012043285A) © PatBase

Title: MANURE SEPARATOR

Abstract: The present invention relates to a device for separating moisture out of a material, such as manure, paper pulp or the like. The device of the invention comprises two or more perforated draining rollers having a main longitudinal axis and two or more pressing rolls having an axis parallel to the main longitudinal axis of the draining rollers. Each pressing roll is pressed against only one draining roller thereby forming a pressing way between the pressing rolls and the draining rollers to press the moisture out of the material flowing through the pressing way. The device also comprises a positive drive system for rotating just the draining rollers. The pressing rolls are driven by a friction with the draining rollers, thereby ensuring that the device does not stall.

Classifications:
International (IPC 8-9): B01D33/06 (Advanced/Invention)
CPC: B01D33/067 B01D33/073 B01D33/37
European: B01D33/067 B01D33/073 B01D33/37
US: 210/386 210/386S 210/780

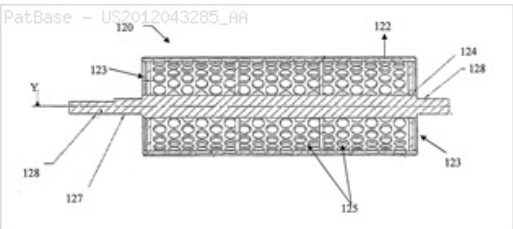

Family:

Publication number	Publication date	Application number	Application date
US2012043285 AA	20120223	US20100861051	20100823

Priority:
US20100861051 20100823

Probable Assignee: VAN LOGTENSTEIN MICHAEL

Assignee(s): (std): VAN LOGTENSTEIN MICHAEL

Inventor(s): (std): VAN LOGTENSTEIN MICHAEL

8) Family number: 59402488 (DE102013018179A1) © PatBase

Title: VERFAHREN UND EINRICHTUNGEN ZUR ERZEUGUNG ABSOLUT TREIBHAUSGASFREIER KRAFTSTOFFE Procedures and equipment for production of absolute GREENHOUSE free fuels (Machine translation)

Abstract: Source: DE102013018179A1 [DE] Die Erfindung bezieht sich auf ein Verfahren zur Dekarbonisierung von Kraftstoffen jeglicher Art und auf ein Vorrichtungssystem (Einrichtungskombination) zur Durchfuehrung des Verfahrens. Das erfindungsgemaesse Verfahren umfasst acht Verfahrensschritte, naemlich 1.) Verfestigung und Speicherung atmosphaerischen Kohlenstoffs mittels Photosynthese in eukaryotischer oder pflanzlicher Biomasse, 2.) Entfernung von verfestigten atmosphaerischen Kohlenstoff enthaltender Biomasse aus der Atmosphaere durch Endlagerung (Sequestrierung) dieser Biomasse im Erdboden, 3.) Ermittlung der dauerhaft aus der oberirdischen Atmosphaere entfernten Kohlenstoff- oder Treibhausgasmengen, 4.) Einsatz mindestens eines Kraftstoffes in mindestens einem Verbrennungsmotor oder mindestens einer Brennstoffzelle, 5.) Ermittlung der Menge an fossilen Kohlen(stoff)dioxydaequivalenten, um die die Atmosphaere durch die Exploration, die Foerderung bzw. den Anbau, den Transport, den Einsatz und die Konversion des fuer die Kraftstoffherstellung eingesetzten Rohstoffes, sowie durch den Transport, die Distribution, die Lagerung, die Abgabe (Betankung) und die Nutzung des mindestens einen resultierenden Kraftstoffes zusaetzlich angereichert wird (Lebenszyklus-Betrachtung), 6.) Ermittlung der Differenz zwischen den aus der Atmosphaere entfernten atmosphaerischen Kohlen(stoff)dioxydaequivalenten der Verfahrensschritte 2 und 3 und den fossilen Kohlen(stoff)dioxydaequivalenten der Verfahrensschritte 4 und 5, um die die Atmosphaere zusaetzlich angereichert wird, 7.) Nutzung des Verfahrensschrittes 6 zur Herstellung eines Gleichgewichts zwischen den der Atmosphaere dauerhaft entzogenen atmosphaerischen Kohlen(stoff)dioxydmengen der Schritte 2 und 3 und den zusaetzlich freigesetzten fossilen Kohlen(stoff)dioxydmengen der Schritte 4 und 5 durch Anpassung der Menge des aus der Erdatmosphaere entfernten atmosphaerischen Kohlenstoffs oder durch Anpassung der (zusaetzlichen) Emission fossilen Kohlenstoffs in die Erdatmosphaere, 8.) Zusammenfassung der gemaess Schritt 7 austarierten atmosphaerischen Kohlenstoff(dioxyd)entnahmen aus der Atmosphaere und der fossilen Kohlenstoff(dioxyd)emissionen in die Atmosphaere zu einer Kohlenstoff(dioxyd)-, Treibhausgas- oder Kohlenstoffgesamtbilanz. Das erfindungsgemaesse Anlagensystem besteht aus einer Kombination von acht Vorrichtungsmodulen, naemlich einem Modul 1 zur Ernte pflanzlicher oder eukaryotischer Biomasse, einem Modul 2 zur Zusammenballung der mit dem Modul 1 geernteten Biomasse, einem Modul 3 zum Zerkleinern von Biomasse, einem Modul 4 zur Aufnahme der zerkleinerten Biomasse, einem Modul 5 zum Transport der zerkleinerten Biomasse, einem Modul 6a zur Verteilung der zerkleinerten Biomasse auf dem Erdboden, einem Modul 6b zur Einbringung der zerkleinerten Biomasse in tiefere Bereiche des Erdbodens, einem Modul 7 zur Bedeckung der auf dem Erdboden verteilten, zur Endlagerung vorgesehenen Biomasse mit einer Erdschicht und einem Modul 8 zur Verdichtung der Bedeckungsschicht. Die Erfindung dient zur Versorgung des Verkehrs mit diversen Nullemissionskraftstoffen und damit zum Aufbau eines Nullemissions-Mobilitaetssystems. **Machine translation:** The invention relates to a process for the decarbonization of fuels of any kind and to a device system (device combination) for implementing the method. The inventive method comprises eight steps, namely 1) strengthening and storing atmospheric carbon through photosynthesis in eukaryotic or plant biomass, 2) removal of solidified atmospheric carbon-containing biomass from the atmosphere through disposal (sequestration) of biomass in the soil, 3) Determination of the permanent from the aerial atmosphere remote carbon or greenhouse gas levels, 4.) using at least one fuel dioxydaequivalenten in at least an internal combustion engine or at least one fuel cell, 5) determining the amount of fossil carbon (material) to the atmosphere through the exploration, promoting or cultivation, transport, use and the conversion of for raw material, fuel production levels, and is enriched additionally by the transport, distribution, storage, delivery (fuel) and the use of at least one resulting fuel (life cycle analysis), 6) determining the difference between the remote from the atmosphere atmospheric carbon (material) dioxydaequivalenten the steps 2 and 3 and the fossil coal (fuel) dioxydaequivalenten the steps 4 and 5 to the atmosphere is enriched additionally, 7) use of step 6 to establish a balance between the atmosphere permanently confiscated atmospheric carbon (material) dioxydmengen the steps 2 and 3 and the additional liberated fossil coal (fuel) dioxydmengen the steps 4 and 5 by adjusting the amount of from the Earth's atmosphere remote atmospheric carbon, or by adjusting the (additional) emissions of fossil carbon into the atmosphere, 8.) Summary of in accordance with step 7 balanced atmospheric carbon (dioxide) Withdrawals from the atmosphere and fossil carbon (dioxide) emissions into the atmosphere at a carbon (dioxide) -, greenhouse gas or carbon overall balance. The inventive conditioning system consists of a combination of eight device modules, namely a module 1 for harvesting vegetable or eukaryotic biomass, a module 2 to the agglomeration of the harvested with the module 1 biomass, a module 3 for chopping the biomass, a module 4 for receiving the crushed Biomass, a module 5 for transporting the shredded biomass, a module 6 for distributing the shredded biomass on the ground, a module 6b for introducing the crushed biomass in deeper areas of the ground, a module 7 to cover the spread on the ground, to final disposal provided biomass with a layer of earth and a module 8 for compressing the cover layer. The invention is used to supply traffic with various zero-emission fuels and thus to build a zero-emission Mobilitaetssystems.

Classifications:
International (IPC 8-9): B09B1/00 C10L1/00 C10L3/00 (Advanced/Invention)
CPC: C10L1/026 C10L5/40 Y02E50/30

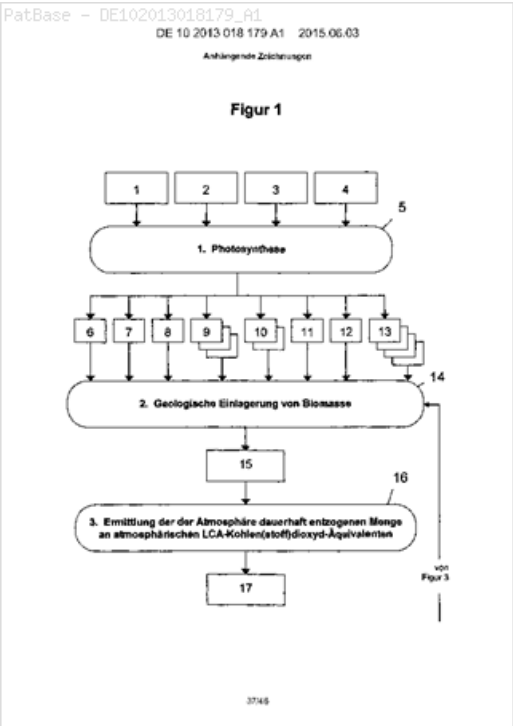

Family:

Publication number	Publication date	Application number	Application date
DE102013018179 A1	20150603	DE201310018179	20131129

Priority:

DE201310018179 20131129

Probable Assignee: FELDMANN MICHAEL

Assignee(s): (std)**:** FELDMANN MICHAEL

9) Family number: 42259525 (DE102007016443A1)

© PatBase

Title: DRUM SCREEN SEPARATOR FOR PARTIAL SEPARATION OF SOLID CONTAINING LIQUID MEDIUM IN BIOGAS SYSTEM, HAS PRESS AND SUPPORTING ROLLERS AND/OR DRUM SCREEN SYNCHRONIZED BY MOTOR AND ROTATABLY PROPELLED ON SAME CIRCUMFERENTIAL SPEED

Abstract: The separator (1) has a collecting tray (23) with an outlet (25) under a drum screen (12) to separate a liquid by pressurizing with press rollers (19, 21). Supporting rollers (18, 20, 22) rotatably supported at a rack (2) and a housing (3) are provided over a length of the screen. The supporting rollers abut at an inner side of a drum wall. The press and supporting rollers and/or the drum screen are synchronized by a motor e.g. hydraulic motor, and are rotatably propelled on a same circumferential speed. A stripper (26) made of plastic, metal, or rubber provides contact pressure to the screen.

Classifications:
International (IPC 8-9)**:** B01D33/06 B01D33/073 B01D33/46 B01D33/64 (Advanced/Invention)
CPC: B01D33/466 B01D33/646 B01D33/801 B01D33/073
European: B01D33/073

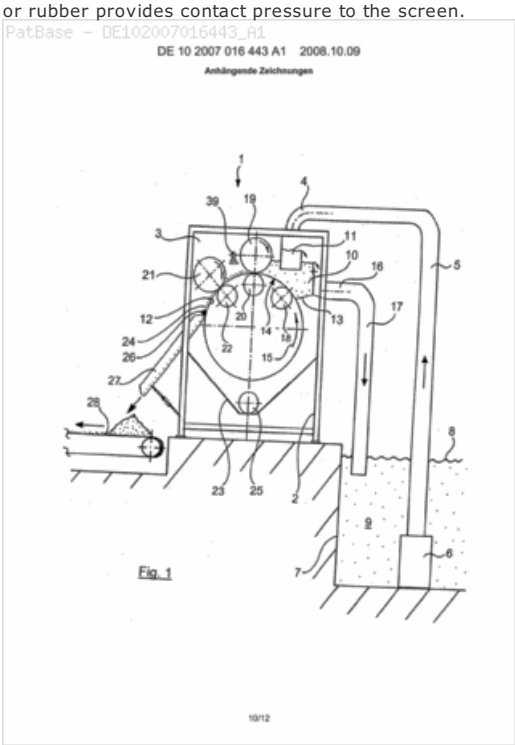

Family:

Publication number	Publication date	Application number	Application date
DE102007016443 A1	20081009	DE200710016443	20070405

Priority:

DE200710016443 20070405

Probable Assignee: UTS BIOGASTECHNIK GMBH

Assignee(s): (std)**:** UTS BIOGASTECHNIK GMBH

Inventor(s): (std)**:** BUERGER ADAM

10) Family number: 70880645 (CN108439755A)

© PatBase

Title: SOLID-LIQUID SEPARATOR USED FOR PROCESSING MANURE RESOURCE

Abstract: The invention discloses a solid-liquid separator used for processing a manure resource. The solid-liquid separator comprises a housing, a twisted dragon is arranged in the housing, a feed inlet and adischarge hatch are arranged at the housing, a driving motor positioned at one end of the feed inlet is connected with the twisted dragon, a filter screen is arranged outside the twisted dragon, several scraper plates are uniformly fixed at the outside edge of the twisted dragon, a roller is connected with a bottom shaft of the scraper plate, several cones are uniformly connected with the surfaceof the roller, and a first groove which is mutually plugged in the scraper plate is arranged at the filter screen. The solid-liquid separator can improve the disadvantages in the prior art, real-timecleaning of the filter screen is realized, and the clear filter screen can be kept for long term.

Classifications:
International (IPC 8-9)**:** B01D29/11 B01D29/64 B30B9/14 C02F103/20 C02F11/12 (Advanced/Invention);
C02F103/20 (Advanced/Non-invention)
CPC: C02F11/12 B01D29/11 B01D29/64 B30B9/14 C02F2103/20

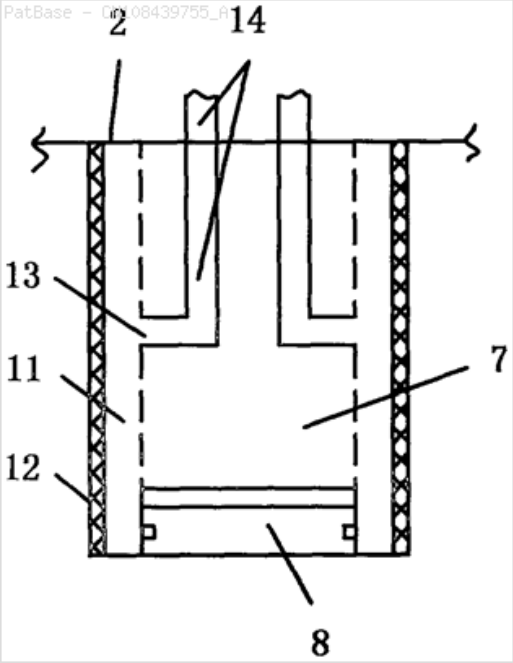

Family:

Publication number	Publication date	Application number	Application date
CN108439755 A	20180824	CN201810199423	20180306

Priority:

CN201810199423 20180306

Probable Assignee: GUANGDONG TUOWANG BIO ENG CO LTD

Assignee(s): (std): GUANGDONG TUOWANG BIO ENG CO LTD

Assignee(s): GUANGDONG TUOWANG BIO ENGINEERING CO ; GUANGDONG CAMEL WANG BIOLOGICAL ENGINEERING CO LTD

Inventor(s): (std): CHEN FANJIE

11) Family number: 42356676 (JP3029713U)

© PatBase

Title: Solid-liquid separation device of livestock manure (Machine translation)

Abstract: Source: JP3029713U

Machine translation: [summary] Without having to immediately stop device for the prevention of slip at the time the amount of manure of material to be treated were launched Purpose has decreased during the treatment process, be able to stop after is clean self-cleaning by automatic internal device discloses an apparatus for processing solid-liquid manure removal of the capital of automatic operation does not cause clogging at the time of resumption of the operation you are configuring. When this belt to rotate the filter belt wound between both roller and roller in one main rotating [configuration, rotation of the rollers positioned parallel to the roller deputy said, a pair sandwiching the belt filter and are connected with solid-liquid separator to be equipped with rollers and compression, and a control mechanism and electrical Sukureiba of the belt, and process and transport in the device, the electrical interlock between the two, automatic separation of the material to be treated was configured to allow the operation.

Classifications:
International (IPC 1-7): B01D33/04 C02F11/12

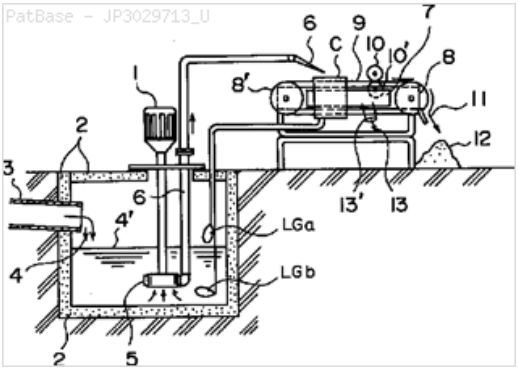

Family:

Publication number	Publication date	Application number	Application date
JP3029713 U	19961011	JP19960003859U	19960402

Priority:

JP19960385996U 19960402

12) Family number: 40970713 (US2007289917A)

Title: SEPARATION SYSTEM AND METHOD OF OPERATING

Abstract: A multi-phase separation system for liquids with dissolved solids and/or liquid/solid mixtures. The separation system can include four phases. One of the phases can include a crossflow filtration unit. The crossflow filtration unit can separate solids from the process fluid by flowing the process fluid in a crossflow orientation over a filter screen. The crossflow filtration unit can be drained of process fluid and cleaned by high pressure cleaning nozzles. The crossflow filtration unit can be configured to simplify or reduce the cost of downstream filtration phases. The phases may be used selectively and/or may be outfitted with various components to meet different system requirements.

Classifications:
International (IPC 8-9): B01D35/28 (Advanced/Invention); B01D35/00 (Core/Invention)
CPC: B01D65/02 B01D2313/26 B01D2321/04
European: B01D65/02 L01D313/26 L01D321/04
US: 210/194 210/194S 210/435 210/497.01 210/497.010S 210/499 210/499S

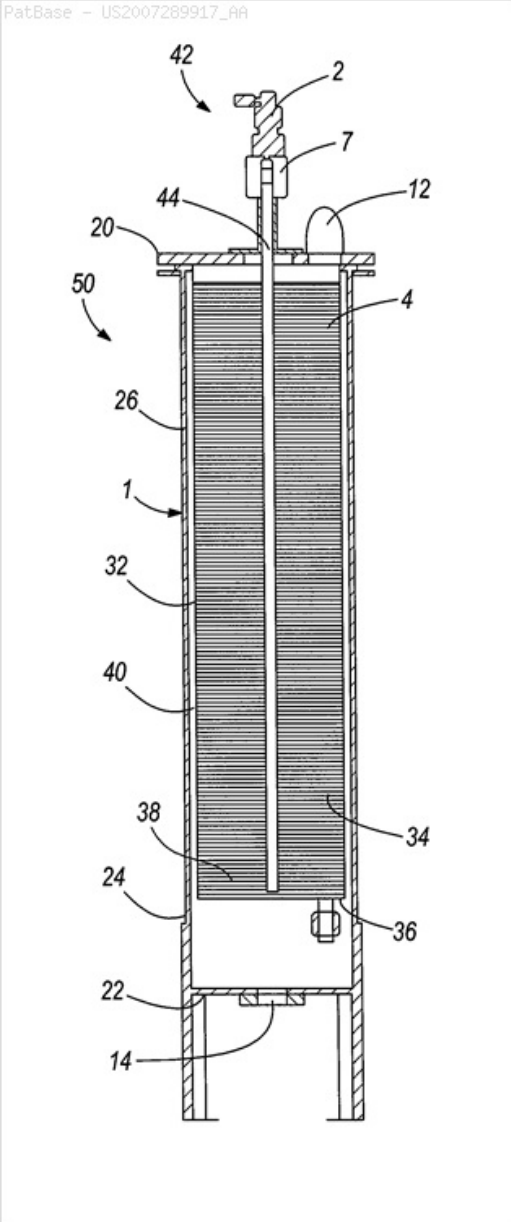

Family:

Publication number	Publication date	Application number	Application date
US2007289917 AA	20071220	US20070763007	20070614

Priority:
US20060804845P 20060615 US20070763007 20070614

Probable Assignee: INTEGRATED SEPARATION SOLUTIONS LLC
Assignee(s): (std): DIETERLE REX A ; MYLIN JOHN M
Assignee(s): INTEGRATED SEPARATION SOLUTIONS LLC
Inventor(s): (std): DIETERLE REX A ; MYLIN JOHN M
Inventor(s): MYLIN JOHN ; DIETERLE REX
Agent(s): MICHAEL BEST AND FRIEDRICH LLP

13) Family number: 52459718 (CN202555053U)

Title: Solid-liquid separator

Abstract: A solid-liquid separator comprises a vibrating device, a residue storage tank and a residue conveying and extruding device which are in sequential connection. The vibrating device comprises a vibrating block, a roller screen drum and a driving device, wherein the roller screen drum is fixedly arranged above the vibrating block, and the driving device is used for controlling the vibrating device. A plurality of meshes are distributed on the side face of the roller screen drum, a residue inlet and a residue outlet are arranged at two ends of the roller screen drum respectively, and the residue conveying

and extruding device is arranged on the front lower portion of the residue outlet and is communicated with the residue outlet through the residue storage tank. Manure residues in manure of livestock and poultry can be sufficiently separated from sewage by the aid of the residue conveying and extruding device and the roller screen drum and the vibrating block of the vibrating device, so that sewage treatment and recovery of organic fertilizers with the manure residues are facilitated.

Classifications:
International (IPC 8-9): B01D33/09 B01D33/72 B01D33/76 (Advanced/Invention)

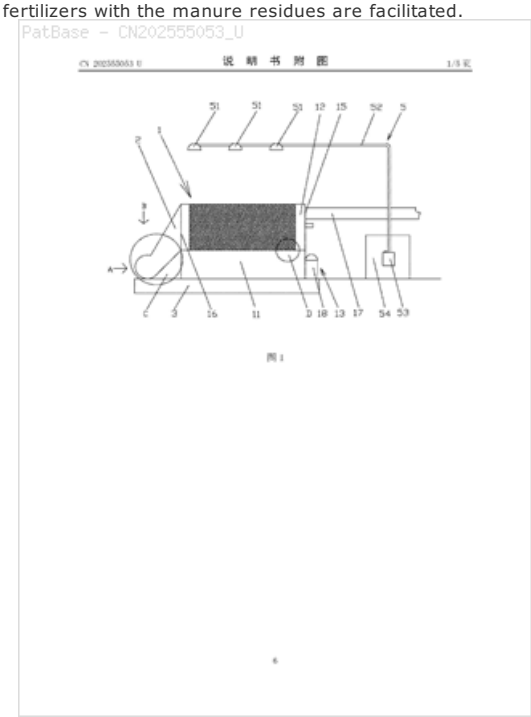

Family:

Publication number	Publication date	Application number	Application date
CN202555053 U	20121128	CN201220205859U	20120509

Priority:
CN201220205859U 20120509

Probable Assignee: QAUNZHOU FENGZE HUAXING BUILDING MACHINERY EQUIPMENT CO LTD
Assignee(s): (std): QAUNZHOU FENGZE HUAXING BUILDING MACHINERY EQUIPMENT CO LTD
Inventor(s): (std): HEMU SU ; JIANHUA SU ; MEIZHANG SU
Inventor(s): SU HEMU ; SU JIANHUA ; SU MEIZHANG

14) Family number: 71784719 (EP3401088A1)

© PatBase

Title: DEVICE AND METHOD FOR THE TREATMENT OF SLURRY, IN PARTICULAR LIQUID MANURE DISPOSITIF ET PROCEDE DE TRAITEMENT DES EAUX USEES, EN PARTICULIER DU PURI

Abstract: Source: EP3401088A1 [DE] Die Erfindung betrifft eine Vorrichtung (1) zur Behandlung von Truebe, insbesondere Guelle, umfassend einen Pressschneckenseparator (2) zur Abscheidung von Feststoff aus der Truebe, eine drehbeweglich angetriebene Trommel (3) zur mikrobiologischen Erwaermung des Feststoffes in der Trommel (3), und eine Austragsvorrichtung (10) an der Trommel (3) zum Austragen der Feststoffes, wobei der Pressschneckenseparator (2) direkt an einer Eintragsstirnwand (5) der Trommel (3) angesetzt, vorzugsweise angeflanscht, ist, sodass der Feststoff aus dem Pressschneckenseparator (2) direkt in die Trommel (3) foerderbar ist. **Machine translation:** The invention relates to a device (1) for the treatment of turbidity, especially guelle, comprising a press screw separator (2) for separation of solids from the hazy, a rotationally movable driven drum (3) for microbiological heating of solid in the drum (3), and to a discharge device (10) to the drum (3) for the discharge of the solid, wherein the press screw separator (2) directly to an input end wall (5) of the drum (3), preferably flange-mounted, so that the solids from the press screw separator (2) Drum (3) is articulatedly connected directly into the conveyor.

Classifications:
International (IPC 8-9): B01D43/00 B30B9/18 C02F11/12 C12G1/02 C12M3/04 (Advanced/Invention)
CPC: B30B9/18 C12G1/02

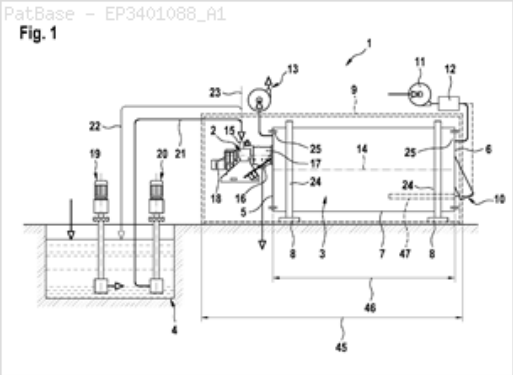

Family:

Publication number	Publication date	Application number	Application date
DE102017207310 A1	20181108	DE201710207310	20170502
EP3401088 A1	20181114	EP20180170366	20180502

Priority:

DE201710207310 20170502

Probable Assignee: ROEHREN U PUMPENWERK BAUER GMBH

Assignee(s): (std)**:** ROEHREN U PUMPENWERK BAUER GMBH

Assignee(s): ROEHREN U PUMPENWERK BAUER GESMBH

Inventor(s): (std)**:** DR EICHLER DIETRICH ; EICHLER DIETRICH ; ROISS OTTO

Agent(s): HOEFER AND PARTNER PATENTANWAELTE MBB

Designated states: AL AT BA BE BG CH CY CZ DE DK EE ES FI FR GB GR HR HU IE IS IT LI LT LU LV MC ME MK MT NL NO PL PT RO RS SE SI SK SM TR

15) Family number: 57687776 (CN203904183U)

© PatBase

Title: HEAT-ADJUSTABLE PIG MANURE SOLID-LIQUID SEPARATOR

Abstract: The utility model relates to a heat-adjustable pig manure solid-liquid separator comprising a frame, wherein a drying machine, a first screw conveying machine, a cyclone dehumidifier and a hot blast furnace are arranged on the frame; the drying machine is connected with the frame by virtue of a roller; a driving motor is arranged at the lower end of the drying machine; the driving motor is connected with the drying machine by virtue of a belt strip; one end of the drying machine is communicated with the cyclone dehumidifier; the lower end of the cyclone dehumidifier is connected with the first screw conveying machine; the first screw conveying machine and the frame are fixed by virtue of a supporting rod; the hot blast furnace is fixedly arranged at the lower end of the left side of the drying machine by virtue of a screw rod; the upper end of the left side of the drying machine is connected with a second screw conveying machine; the second screw conveying machine is connected with a hopper by virtue of a feed pipe. The heat-adjustable pig manure solid-liquid separator is characterized in that an air volume adjustment valve switch is arranged on an air outlet pipe of the hot blast furnace. According to the heat-adjustable pig manure solid-liquid separator disclosed by the utility model, the air volume adjustment valve switch on the hot blast furnace can be opened according to the actual conditions so as to ensure that cold air enters the drying machine, so that the temperature in the drying machine can be reduced, and the phenomenon that pig manure does not have the efficacy of an organic fertilizer because of ultra-high temperature can be avoided.

Classifications:

International (IPC 8-9)**:** C02F11/12 C02F11/18 (Advanced/Invention)

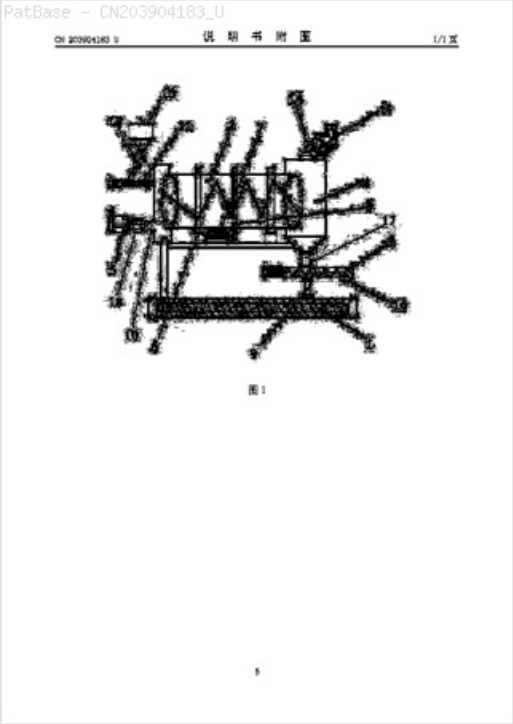

Family:

Publication number	Publication date	Application number	Application date
CN203904183 U	20141029	CN201420291128U	20140604

Priority:

CN201420291128U 20140604

Probable Assignee: HANGZHOU HENGXI IND DESIGN CO LTD

Assignee(s): (std)**:** HANGZHOU HENGXI IND DESIGN CO LTD

Assignee(s): HANGZHOU HENGXI INDUSTRIAL DESIGN CO ; INDUSTRIAL DESIGN CO LTD HANGZHOU HENG DILUTE

Inventor(s): (std)**:** XIANG GUANGTING

16) Family number: 31918807 (CN2675268Y)

© PatBase

Title: Roller type continuous high efficiency solid-liquid separator

Abstract: A roller type continuous high efficiency solid-liquid separator is provided with a separating rotor linked by a driving device. The roller type continuous high efficiency solid-liquid separator is characterized in that the separating rotor is formed by a central shaft and an interior screen drum linked coaxially; the central shaft of the separating rotor is in the horizontal position and arranged aslant relative to the horizon; stainless cover drums are concentrically arranged outside the inside screen drum and respectively support the machine frame; the higher side of the separating rotor is linked by a feed tube linked by the delivery end of the mud pump; the feed port is communicated with a liquid concentrate pool through the

pipeline; the lower side of the separating rotor is provided with a discharge port of solid material, and the bottom of the separating rotor is also provided with a collecting reservoir; the central shaft of the separating rotor is linked with an angle adjusting device to improve separating effect and production capacity and to reduce clogging of the mesh of the solid-liquid separator. The utility model is suitable for the material separation with over 90 percent moisture, for example, the material separation of flashing liquid manure water in the culture field.

Classifications:
International (IPC 8-9): B04B5/10 B04B5/12 (Advanced/Invention); B04B5/00 (Core/Invention)
International (IPC 1-7): B04B5/10 B04B5/12

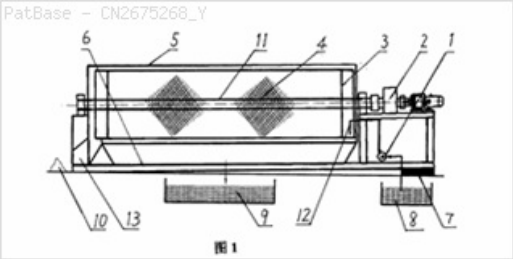

Family:

Publication number	Publication date	Application number	Application date
CN2675268 Y	20050202	CN200420003912U	20040225

Priority:
CN200420003912U 20040225

Probable Assignee: ZUO GUANGSHENG
Assignee(s): (std): ZUO GUANGSHENG
Inventor(s): (std): SUN ZHAOCHUN LIU
Inventor(s): ZHAOCHUN LIU SUN

17) Family number: 8520808 (US5562067A)

Title: Egg harvester

Abstract: PCT No. PCT/AU92/00233 Sec. 371 Date Jun. 21, 1994 Sec. 102(e) Date Jun. 21, 1994 PCT Filed May 25, 1992 PCT Pub. No. WO92/20222 PCT Pub. Date Nov. 26, 1992An egg harvester has hingedly connecting nesting boxes resting on an elongate belt fixed at each end and along which a shuttle is pulled by a drive cable. The belt and a second conveyor define two slots which pass under the nesting boxes. The eggs and litter fall through slot and the eggs are removed from the litter by an egg separator and are transferred to an egg conveyor for transport to one end of the shed. Soiled litter and any manure is removed from the litter by a litter cleaner and fresh litter, supplied by a hopper on the shuttle is spaced across the belt which is brought back under the nesting boxes through the slot. The harvester enables collection of the eggs while hens remain in the nesting boxes as the shuttle passes underneath.

Classifications:
International (IPC 8-9): A01K31/16 A01K43/00 B07C5/06 B65G47/84 (Advanced/Invention); A01K31/00 A01K43/00 B07C5/04 B65G47/84 (Core/Invention)
International (IPC 1-7): A01K31/16 A01K43/00 B07C5/06 B65G47/84
CPC: A01K31/16
European: A01K31/16
US: 119/334 119/337 119/338 119/440 119/490

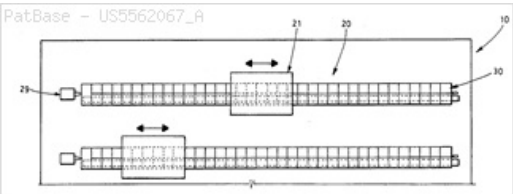

Family:

Publication number	Publication date	Application number	Application date
AU199217960 A1	19921230	AU19920017960	19920525
AU659642 B2	19950525	AU19920017960	19920525
DE69229049 D1	19990602	DE19926029049	19920525
DE69229049 T2	19991223	DE19926029049T	19920525
EP0591468 A1	19940413	EP19920917381	19920525
EP0591468 A4	19940727	EP19920917381	19920525
EP0591468 B1	19990428	EP19920917381	19920525
ES2133325 T3	19990916	ES19920917381T	19920525
JP6510694 T2	19941201	JP19920510086T	19920525
US5562067 A	19961008	US19940142319	19940621
WO9220222 A1	19921126	WO1992AU00233	19920525

Priority:
AU1991PK06287 19910523 AU1991PK08900 19911014 AU19920017960 19920525 WO1992AU00233 19920525

Probable Assignee: SMITH CHRISTINE ANNE
Assignee(s): (std): CHRISTINE ANNE SMITH ; COLIN JAMES SMITH ; SMITH ; SMITH CHRISTINE ANNE ; SMITH COLIN JAMES ; SMITH CONIN JAMES
Assignee(s): SMITH CHRISTINE ANNE LOT ; SMITH CHRISTINE ANNE BEERWAH AU ; SMITH CONIN JAMES BEERWAH AU
Inventor(s): (std): SMITH COLIN J ; SMITH COLIN JAMES
Inventor(s): SMITH COLIN JAMES BEERWAH QLD 4519 AU ; COLIN JAMES SMITH
Agent(s): FISHER ADAMS KELLY; FISHER ADAMS KELLY PTY LTD; FISHER ADAMS KELLY CALLINANS; SPRUSON AND FERGUSON
Designated states: AT AU BE CA CH DE DK ES FR GB GR IT JP LU MC NL SE US

18) Family number: 51261843 (CN202237417U)

Title: Dual-scraper centrifugal poultry excrement solid-liquid separator

Abstract: The utility model discloses a dual-scraper centrifugal poultry excrement solid-liquid separator, and relates to poultry excrement solid-liquid separation equipment, which is used for performing solid-liquid separation treatment to pig excrement, cattle excrement and chicken excrement on pig farms, cattle farms and chicken farms, and solves the technical problems of large resource waste, large investment, high organic manure resource loss, imperfect equipment universality and the like of a conventional poultry excrement solid-liquid separator. The separator comprises a frame, a feed tank, a blanking device, a cone-jet part, a roller part, an upper scraper, a material storage tank, a lower scraper, a water collection tank, and a power and support system, wherein the roller part consists of an outer roller, an inner ring, a stainless steel screen, a chassis, a blanking plate, an isolation ring and a water isolation cylinder; the upper scraper with width the same as that of an annular path is arranged between the outer wall of the isolation ring and the inner wall of the outer roller; the lower scraper is arranged on the chassis; and two sides of the lower scraper are closely attached to two sides of the material path of the material storage tank.

Classifications:
International (IPC 8-9): B01D21/26 C02F11/12 (Advanced/Invention)

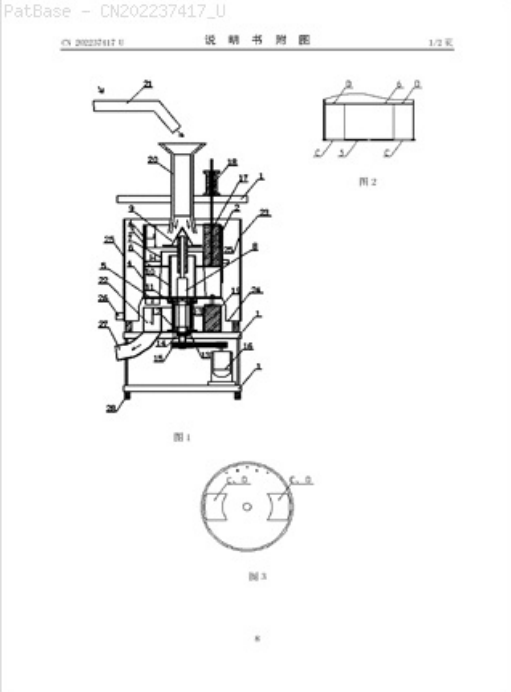

Family:

Publication number	Publication date	Application number	Application date
CN202237417 U	20120530	CN201120280682U	20110803

Priority:
CN201120280682U 20110803

Probable Assignee:	FUJIAN LIANCHENG TIANDI FLORA FARM
Assignee(s): (std):	FUJIAN LIANCHENG TIANDI FLORA FARM
Inventor(s): (std):	MAOCHENG ZHUANG ; SIZHI CHEN
Inventor(s):	ZHUANG MAOCHENG ; CHEN SIZHI

19) Family number: 73521892 (CN109464837A)

© PatBase

Title: Standardized multilayer cage duck farm manure solid-liquid separator (Machine translation)

Abstract: Source: CN109464837A **Machine translation:** The present invention provides a standardized multilayer cage duck farm manure solid-liquid separator, to solve the prior art can not duck manure solid-liquid separation problems. The standardized multilayer cage duck farm manure solid-liquid separator, including a plurality of rollers supporting the composite filter, the composite filter on a roller conveyor belt closed wound and separated by a vertical arrangement of the multi-layer composite filter band comprises a horizontal section and inclined section, horizontal section and transported for solid-liquid separation after the separation of duck manure, horizontal section at the end of the drum is provided with a manure scraper plate, the horizontal section of duck manure scraping manure plate fall to the next layer of the horizontal section, the horizontal section of the lowermost end of the conveyor belt is provided with its convergence, duck manure on the horizontal segments fall on the conveyor belt; Composite filter belt provided with several filters, duck manure moisture inside the filter through the filter leak down. Solid-liquid separator of the present invention simple structure, easy to use, can effectively achieve a duck manure solid-liquid separation, with good usability.

Classifications:
International (IPC 8-9): B01D33/04 B01D33/41 B01D33/46 B01D33/48 C02F103/20 C02F11/123 (Advanced/Invention); C02F103/20 (Advanced/Non-invention)

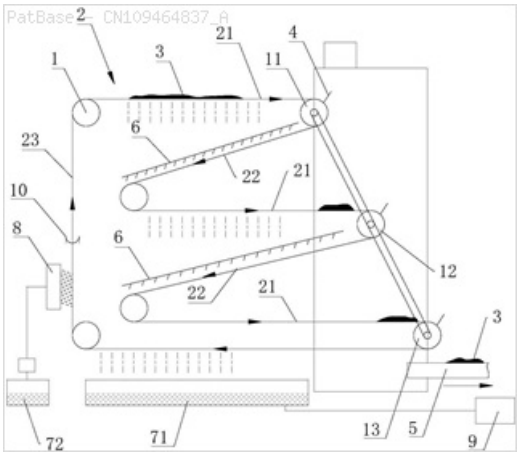

Family:

Publication number	Publication date	Application number	Application date
CN109464837 A	20190315	CN201910015531	20190108

Priority:

CN201910015531 20190108

Probable Assignee: SHANDONG MING GRANVILLE ENVIRONMENTAL PROTECTION TECHNOLOGY CO LTD

Assignee(s): SHANDONG MING GRANVILLE ENVIRONMENTAL PROTECTION TECHNOLOGY CO LTD

20) Family number: 57686920 (CN203904227U)

© PatBase

Title: PIG MANURE SOLID-LIQUID SEPARATOR WITH WATER HEATER

Abstract: The utility model relates to a pig manure solid-liquid separator with a water heater. The pig manure solid-liquid separator with the water heater comprises a frame, wherein a dryer, a discharge screw conveyor, a cyclone dehumidifier and a hot blast stove are arranged on the frame; the dryer is connected with the frame by use of a roller; a driving motor is arranged on the frame at the lower end of the dryer and connected with the dryer by use of a belt; one end of the dryer is connected with the cyclone dehumidifier; the discharge screw conveyor is connected to the lower end of the cyclone dehumidifier; the discharge screw conveyor is fixed together with the frame by use of a supporting rod; the hot blast furnace is fixed on the lower end of the left side of the dryer by use of a screw; the upper end of the left side of the dryer is connected to a feeding screw conveyor; a hopper is connected to the feeding screw conveyor by use of a feed pipe. The pig manure solid-liquid separator is mainly characterized in that a tubular water heater is connected to the upper end of the cyclone dehumidifier, the air outlet of the tubular water heater is connected to a suction fan, and water inlet and outlet pipes are arranged at the two sides of the tubular water heater, respectively.

Classifications:
International (IPC 8-9): C05F3/06 (Advanced/Invention)
CPC: Y02A40/208

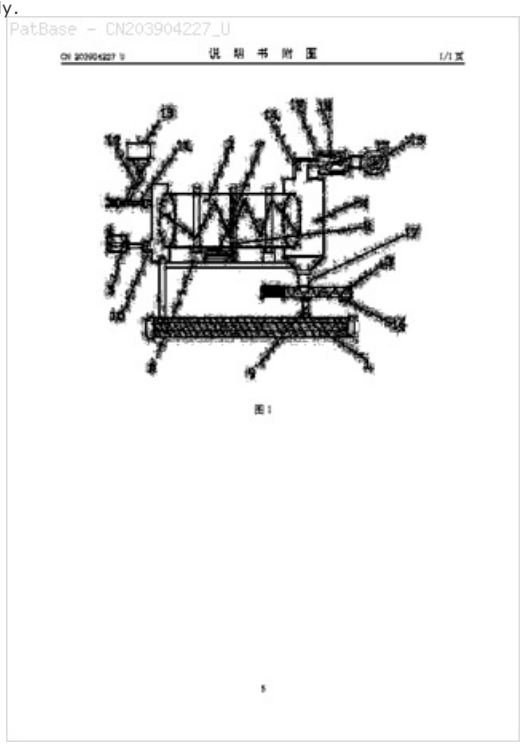

Family:

Publication number	Publication date	Application number	Application date
CN203904227 U	20141029	CN201420291097U	20140604

Priority:

CN201420291097U 20140604

Probable Assignee: HANGZHOU HENGXI IND DESIGN CO LTD

Assignee(s): (std): HANGZHOU HENGXI IND DESIGN CO LTD

Assignee(s): HANGZHOU HENGXI INDUSTRIAL DESIGN CO ; INDUSTRIAL DESIGN CO LTD HANGZHOU HENG DILUTE

Inventor(s): (std): XIANG GUANGTING

21) Family number: 42022953 (US2008169245A)

© PatBase

Title: SOLIDS SEPARATION TECHNOLOGY

Abstract: A method for separating a low biosolids suspension stream into biosolids and water whereby the biosolids contain the majority of the original beneficial nutrients, and the water is substantially free of components harmful to the environment is disclosed. The method relies on the use of a coagulant and a flocculent to bind the colloidal particles and a rotating screen drum separator. Examples detail a composition of manure stream treated with specific coagulant and flocculent that achieve high separation efficiencies and speeds. A composition for binding colloidal fines using a coagulant and flocculent in several industrial uses is also disclosed.

Classifications:
International (IPC 8-9): B01D37/00 C02F1/56 (Advanced/Invention); C02F1/54 (Core/Invention)
CPC: C02F1/004 C02F1/5245 C02F1/56 C02F11/121 C02F11/14 C02F11/16 C02F2103/20
European: C02F1/00D6 C02F1/52F2 C02F1/56 M02F103/20 M02F11/12C M02F11/14 M02F11/16
US: 210/725 210/725S 210/731 210/731S 210/734 210/738 210/738S 210/767 210/767S

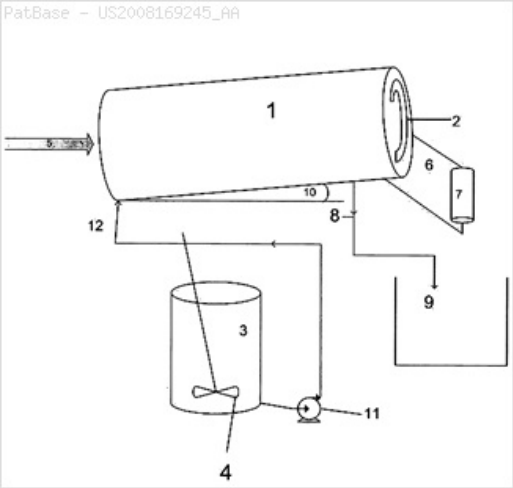

Family:

Publication number	Publication date	Application number	Application date
US2008169245 AA	20080717	US20070654186	20070117
WO08088788 A1	20080724	WO2008US00487	20080114

Priority:
US20070654186 20070117

Probable Assignee: SOIL NET LLC

Assignee(s): (std): KRYSIAK MICHAEL DENNIS ; ROA ESPINOSA AICARDO ; SOIL NET LLC

Inventor(s): (std): KRYSIAK MICHAEL DENNIS ; ROA ESPINOSA AICARDO

Agent(s): WEISS AND WEISS; WEISS PHILIP M

Designated states: AE AG AL AM AO AT AU AZ BA BB BE BF BG BH BJ BR BW BY BZ CA CF CG CH CI CM CN CO CR CU CY CZ DE DK DM DO DZ EC EE EG ES FI FR GA GB GD GE GH GM GN GQ GR GT GW HN HR HU ID IE IL IN IS IT JP KE KG KM KN KP KR KZ LA LC LK LR LS LT LU LV LY MA MC MD ME MG MK ML MN MR MT MW MX MY MZ NA NE NG NI NL NO NZ OM PG PH PL PT RO RS RU SC SD SE SG SI SK SL SM SN SV SY SZ TD TG TJ TM TN TR TT TZ UA UG US UZ VC VN ZA ZM ZW