Search history

Search 1:	(Results)
Search 2:	blister (Results 56458)
Search 3:	pack (Results 457078)
Search 4:	2 and 3 (Results 19055)
Search 5:	medicine (Results 773068)
Search 6:	4 and 5 (Results 5016)
Search 7:	bubble (Results 266055)
Search 8:	6 and 7 (Results 318)
Search 9:	box (Results 1000000)
Search 10:	9 and 8 (Results 124)
Search 11:	coat* (Results 1000000)
Search 12:	10 and 11 (Results 94)
Search 13:	stack (Results 733074)
Search 14:	12 and 13 (Results 30)

1) Family number: 31497103 (US2005027098A)

© PatBase

Title: SULFONATED ALIPHATIC-AROMATIC COPOLYESTERS AND SHAPED ARTICLES PRODUCED THEREFROM

Abstract: Sulfonated aliphatic-aromatic copolyesters and articles made therefrom, and processes for producing the sulfonated aliphatic-aromatic copolyesters and articles are provided. Articles that can be made from the sulfonated aliphatic-aromatic copolyesters include films, coatings and laminates. Some of the compositions and articles are biocompostable. The films can further be used to form shaped articles such as sheets, food packaging such as sandwich wraps, thermoformed containers, and coatings for, for example, films and other substrates. The sulfonated aliphatic-aromatic copolyesters are derived from copolyesters produced from aliphatic-aromatic copolyesters formed from an aromatic dicarboxylic acid component, an aliphatic dicarboxylic acid component, a first glycol component consisting of 1,4-butanediol, a second glycol component, and optionally, a polyfunctional branching agent.

Classifications:
International (IPC 8-9): B29C55/02 B65D1/00 B65D65/40 C08G63/02 C08G63/68 C08G63/688 C08L101/00 C08L67/02 C09D167/02 D01F6/84 D01F6/92 D02G3/02 D02G3/04 (Advanced/Invention);
B29K67/00 C08L3/02 C08L67/04 C08L69/00 C08L77/12 (Advanced/Non-invention);
B29C55/02 B65D1/00 B65D65/40 C08G63/00 C08L101/00 C08L67/00 C09D167/02 D01F6/84 D01F6/92 D02G3/02 D02G3/04 (Core/Invention);
C08L3/00 C08L69/00 C08L77/00 (Core/Non-invention)
International (IPC 1-7): C08G63/02 C08G63/68 C08G63/688
CPC: Y10T428/31504 C08L67/02 C08G63/6886 C08L3/02 C08L67/025 C08L67/04 C08L69/00 C08L77/12 C09D167/02
European: C08G63/688D2 C08L67/02 C09D167/02 M08L3/02 M08L67/02 M08L67/02B M08L67/04 M08L69/00 M08L77/12
US: 264/176.1 264/219 428/411.1 524/445 528/272 528/272P
JP F-Term: 3E033 3E033/BA01 3E033/BA07 3E033/BA10 3E033/BA17 3E033/BA22 3E033/BA26 3E033/BB01 3E033/CA20 3E086 3E086/AD05 3E086/AD06 3E086/AD13 3E086/BA04 3E086/BA13 3E086/BA14 3E086/BA15 3E086/BA16 3E086/BA33 3E086/BB41 3E086/BB90 3E086/CA01 3E086/CA11 3E086/CA12 3E086/CA13 3E086/DA08 4F210 4F210/AA24/E 4F210/AG01 4F210/QA08 4F210/QC05 4F210/QG01 4F210/QG17 4J002 4J002/AB04/X 4J002/CF03/X 4J002/CF09/X 4J002/CF14/W 4J002/CF14/X 4J002/CF18/X 4J002/CF19/X 4J002/CG00/X 4J002/CL08/X 4J002/GG01 4J002/GK00 4J029 4J029/AA03 4J029/AC02 4J029/AD01 4J029/AE01 4J029/AE02 4J029/AE03 4J029/BA01 4J029/BA02 4J029/BA03 4J029/BA04 4J029/BA05 4J029/BD07/A 4J029/BD10 4J029/BF09 4J029/CA01 4J029/CA02 4J029/CA03 4J029/CA04 4J029/CA05 4J029/CA06 4J029/CA09 4J029/CB05/A 4J029/CB05/B 4J029/CB06/A 4J029/CB06/B 4J029/CC06/A 4J029/CE04 4J029/CF03 4J029/CH02 4J029/DB02 4J029/DB07 4J029/FC12 4J029/FC36 4J029/HA01 4J029/HA02 4J029/HB01 4J029/HB02 4J029/JA09/3 4J029/JA12/3 4L035 4L035/BB31 4L035/EE20 4L035/HH01 4L036 4L036/MA05 4L036/MA08 4L036/MA39 4L036/PA33 4L036/PA46 4L036/UA25
JP F-Index: B29C55/02 B29K67:00 B65D1/00/A B65D1/00/111 B65D1/02/110 B65D1/24/110 B65D1/26/110 B65D1/34 B65D65/40/D C08G63/688 C08L101/00 C08L67/02 D01F6/84/301/H D01F6/84/305/B D01F6/92/307/Z D02G3/02 D02G3/04
JP Facet: BRQ BSF ZAB ZBP

Family:

Publication number	Publication date	Application number	Application date
CN1860152 A	20061108	CN200480028613	20040728
DE602004034716 D1	20111215	DE200460034716T	20040728
EP1648953 A1	20060426	EP20040779505	20040728
EP1648953 B1	20111005	EP20040779505	20040728
JP2007500769 T2	20070118	JP20060522057T	20040728
US2005027098 AA	20050203	US20030631880	20030731
US7220815 BB	20070522	US20030631880	20030731
WO05012390 A1	20050210	WO2004US24463	20040728

Priority:

US20030631880 20030731 EP20040779505 20040728 WO2004US24463 20040728

Probable Assignee: E I DU PONT DE NEMOURS AND CO

Assignee(s): (std): DU PONT ; HAYES RICHARD ALLEN ; EIDU PONT DE NEMOURS AND CO

Assignee(s): EI DU PONT DE NEMOURS AND CO WILMINGTON ; DUPONT POLYMERS INC ; E I DUPONT DE NEMOURS AND COMPANY ; EI DU PONT DE NEMOURS AND CO ; E I DU PONT DE NEMOURS AND COMPANY ; E I DU PONT DE NEMOURS AND CO ; EI DUPONT DE NEMOURS AND CO

Inventor(s): (std): ALLEN HAYES RICHARD ; HAYES RICHARD ALLEN

Inventor(s): HAYES RICHARD ALLEN BRENTWOOD ; HAYES RICHARD

Agent(s): MARKS AND CLERK LUXEMBOURG LLP; HIRSCH MARC ROGER; YAMASAKI KAZUO; OGAWA NOBUO; HAKODA ATSUSHI; KUMAKURA YOSHIO; ASAI KENJI; E I DU PONT DE NEMOURS AND CO LEGAL PATENT RECORDS CENTER; BARRY DALE; GAIL A

Designated states: AE AG AL AM AT AU AZ BA BB BE BF BG BJ BR BW BY BZ CA CF CG CH CI CM CN CO CR CU CY CZ DE DK DM DZ EC EE EG ES FI FR GA GB GD GE GH GM GN GQ GR GW HR HU ID IE IL IN IS IT JP KE KG KP KR KZ LC LK LR LS LT LU LV MA MC MD MG MK ML MN MR MW MX MZ NA NE NI NL NO NZ OM PG PH PL PT RO RU SC SD SE SG SI SK SL SN SY SZ TD TG TJ TM TN TR TT TZ UA UG US UZ VC VN YU ZA ZM ZW

2) Family number: 62910137 (US2016200782A)

© PatBase

Title: FORMULATION OF MK2 INHIBITOR PEPTIDES

Abstract: The described invention provides pharmaceutical formulations comprising a polypeptide of amino acid sequence YARAAARQARAKALARQLGVAA (SEQ ID NO: 1) or a functional equivalent thereof with improved stability and bioavailability.

Classifications:

International (IPC 8-9): A61K38/00 A61K38/10 A61K38/16 A61K38/17 A61K47/02 A61K47/26 A61K47/32 A61K47/64 A61K9/00 A61K9/12 A61K9/14 A61P43/00 A61P9/00 C07K C07K14/00 C07K14/47 C07K19/00 C07K7/06 C07K7/08 C12N9/99 (Advanced/Invention)

International (IPC 1-7): C07K14/47

CPC: C07K14/4703 A61K47/26 A61K9/0075 A61K47/02 A61K9/0078 A61K47/32 A61K9/0019 A61K38/00 A61K38/1709 A61K9/145

US: 514/16.5 530/326

JP F-Term: 4B050 4B050/GG02 4C076 4C076/AA24 4C076/AA95 4C076/BB22 4C076/CC11 4C076/DD23 4C076/EE09 4C076/EE41 4C076/GG09 4C084 4C084/AA02 4C084/AA03 4C084/BA01 4C084/BA08 4C084/BA18 4C084/DC32 4C084/MA05 4C084/MA13 4C084/MA55 4C084/NA03 4C084/NA11 4C084/ZA36 4C084/ZC20 4C201 4H045 4H045/AA10 4H045/AA20 4H045/AA30 4H045/BA16 4H045/BA17 4H045/BA41 4H045/DA55 4H045/EA20 4H045/EA28 4H045/FA34 4H045/GA21

JP F-Index: A61K38/16 A61K47/02 A61K47/32 A61K47/64 A61K9/12 A61P43/00/111 A61P9/00 C07K14/00/ZNA C07K19/00 C07K7/06 C07K7/08 C12N9/12 C12N9/99

JP Facet: ZNA

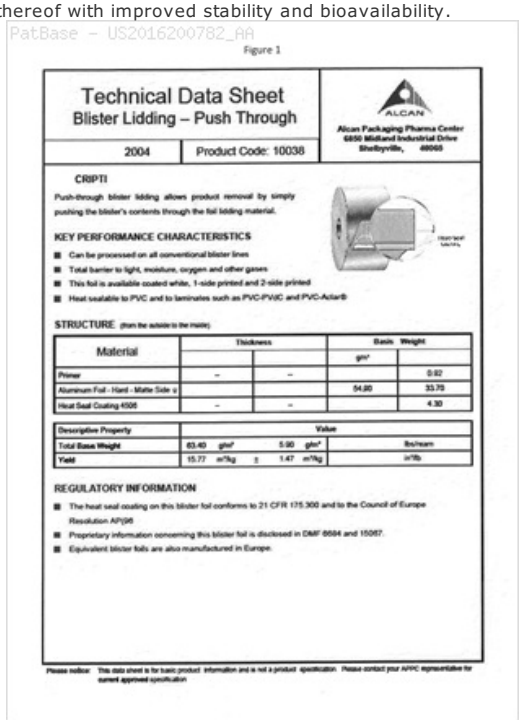

Family:

Publication number	Publication date	Application number	Application date
AU2016205125 AA	20170713	AU20160205125	20160108
AU2016205125 AB	20171019	AU20160205125	20160108
BR112017014737 A2	20180116	BR20171114737	20160108
CA2972916 AA	20170630	CA20162972916	20160108
CN107406489 A	20171128	CN201680005237	20160108
EP3242886 A1	20171115	EP20160735478	20160108
EP3242886 A4	20180829	EP20160735478	20160108
HK1246807 A1	20180914	HK20180106201	20180514
IN201717023781 A	20171013	IN201717023781	20170706
JP2018502860 T2	20180201	JP20170536526T	20160108
KR20170102900 A	20170912	KR20177021042	20160108
MX2017008994 A1	20180918	MX20170008994	20160108
RU2017128077 A	20190208	RU20170128077	20160108
SG11201705559R A1	20170830	SG20171105559	20160108
US2016200782 AA	20160714	US20160991531	20160108
US2019031730 AA	20190131	US20180106504	20180821
US10087225 BB	20181002	US20160991531	20160108
WO16112292 A1	20160714	WO2016US12650	20160108
ZA201704495 A	20190130	ZA20170004495	20170703

Priority:

US20150101190P 20150108 US20160991531 20160108 WO2016US12650 20160108
US20180106504 20180821

Probable Assignee: MOERAE MATRIX INC

Assignee(s): (std): MOERAE MATRIX INC

Assignee(s): MORI MATRIKS INK ; PETERSON CARYN ; BROPHY COLLEEN ; LANDER CYNTHIA

Inventor(s): (std): CYNTHIA LANDER ; COLLEEN BROPHY ; CARYN PETERSON ; LANDER CYNTHIA ; PETERSON CARYN ; BROPHY COLLEEN

Inventor(s): LENDER SINTIYA ; BROFI KOLIN ; PETERSON KARIN

Agent(s): SPRUSON AND FERGUSON; OSLER HOSKIN AND HARCOURT LLP; J A KEMP; CHINA PATENT AGENT HK LTD; DESHIMARU TAKESHI; HAKODA ATSUSHI; ASAI KENJI; YAMASAKI KAZUO; ICHIKAWA SATSUKI; HATTORI HIRONOBU; YURIDICHESKAYA GORODISSKIJ I PARTNERY OOO FA; MCCARTER AND ENGLISH LLP; LUBIT BEVERLY W

Designated states: AE AG AL AM AO AT AU AZ BA BB BE BF BG BH BJ BN BR BW BY BZ CA CF CG CH CI CL CM CN CO CR CU CY CZ DE DK DM DO DZ EC EE EG ES FI FR GA GB GD GE GH GM GN GQ GR GT GW HN HR HU ID IE IL IN IR IS IT JP KE KG KM KN KP KR KZ LA LC LI LK LR LS LT LU LV LY MA MC MD ME MG MK ML MN MR MT MW MX MY MZ NA NE NG NI NL NO NZ OM PA PE PG PH PL PT QA RO RS RU RW SA SC SD SE SG SI SK SL SM SN ST SV SY SZ TD TG TH TJ TM TN TR TT TZ UA UG US UZ VC VN ZA ZM ZW

3) Family number: 32541163 (US2006009609A)

© PatBase

Title: SULFONATED AROMATIC COPOLYESTERS CONTAINING HYDROXYALKANOIC ACID GROUPS AND SHAPED ARTICLES PRODUCED THEREFROM

Abstract: Sulfonated aromatic copolyesters and articles made therefrom, and processes for producing the sulfonated aromatic copolyesters and articles are provided. Articles that can be made from the sulfonated aromatic copolyesters include films, coatings and laminates. Some of the compositions and articles are biocompostable. The films can further be used to form shaped articles such as sheets, food packaging such as sandwich wraps, thermoformed containers, and coatings for, for example, films and other substrates. The sulfonated aromatic copolyesters contain a hydroxyalkanoic acid component.

Classifications:
International (IPC 8-9): B32B27/36 C08F20/00 C08G63/02 C08G63/18 C08G63/60 C08G63/66 C08G63/688 C08L67/00 C08L67/04 (Advanced/Invention);
C08L101/16 (Advanced/Non-invention);
B32B27/36 C08F20/00 C08G63/00 C08L67/00 (Core/Invention);
C08L101/00 (Core/Non-invention)
International (IPC 1-7): C08G63/60 C08G63/688
CPC: Y10T428/1328 Y10T428/1352 Y10T428/1372 Y10T428/1376 Y10T428/2913 D21H19/20 B32B27/06 C08G63/60 C08G63/688 C08L3/02 C08L67/00 C08L67/025 C08L67/04 C08L69/00 C08L77/12 C08L2201/06 C09D167/025 D21H19/56 D21H27/10 Y10T428/31786 Y10T428/31794 Y10T428/249921 C08K3/013
European: B32B27/06 C08G63/60 C08G63/688 C08L67/00 C09D167/02B D21H19/20 D21H19/56 M08K3/00P5 M08L201/06 M08L3/02 M08L67/02B M08L67/04 M08L69/00 M08L77/12 N21H27/10
US: 428/221 428/34.9 428/35.7 428/36.4 428/36.5 428/364 428/480 428/482 524/407 525/437 525/444 525/450 528/272 528/272P 528/293 528/296 528/298 528/300 528/301 528/302 528/307 528/308 528/308.6
JP F-Term: 4F100 4F100/AA01/B 4F100/AB01/B 4F100/AG00/B 4F100/AJ04/B 4F100/AJ07/B 4F100/AK01/B 4F100/AK12/B 4F100/AL01/A 4F100/AP03/B 4F100/AT00/B 4F100/BA02 4F100/BA07 4F100/DG10/B 4F100/DJ01/B 4F100/EH20/2 4F100/EH23/2 4F100/GB15 4F100/JJ03 4F100/YY00/A 4J002 4J002/AB04/2 4J002/CF03/2 4J002/CF04/1 4J002/CF05/1 4J002/CF08/1 4J002/CF14/1 4J002/CF18/1 4J002/CF18/2 4J002/CF19/2 4J002/CG01/2 4J002/CL03/2 4J002/CL07/2 4J002/GF00 4J002/GG02 4J002/GK00 4J029 4J029/AA03 4J029/AB01 4J029/AC02 4J029/AD01 4J029/AE02 4J029/AE03 4J029/BA01 4J029/BA02 4J029/BA03 4J029/BA04 4J029/BA05 4J029/BD07/A 4J029/BF09 4J029/BF18 4J029/BF25 4J029/CB05/A 4J029/CB06/A 4J029/CB12/A 4J029/CC05/A 4J029/CE04 4J029/CF08 4J029/DB02 4J029/DB07 4J029/DB13 4J029/EA03 4J029/EA05 4J029/FC03 4J029/FC08 4J029/FC12 4J029/FC14 4J029/FC16 4J200 4J200/AA04 4J200/BA10 4J200/BA13 4J200/BA14 4J200/BA17 4J200/CA06
JP F-Index: B32B27/36 C08G63/688 C08L101/16 C08L67/00 C08L67/04
JP Facet: ZBP

Family:

Publication number	Publication date	Application number	Application date
AU2005265434 AA	20060126	AU20050265434	20050708
AU2005265434 BB	20101014	AU20050265434	20050708
CN1980975 A	20070613	CN200580022495	20050708
CN1980975 B	20110914	CN200580022495	20050708
DE602005023164 D1	20101007	DE200560023164T	20050708
EP1769015 A1	20070404	EP20050773202	20050708
EP1769015 B1	20100825	EP20050773202	20050708
IN00181DN2007 A	20070803	IN2007DN00181	20070108
JP2008506022 T2	20080228	JP20070520567T	20050708
US2006009609 AA	20060112	US20040887716	20040709
US7358325 BB	20080415	US20040887716	20040709
WO06010063 A1	20060126	WO2005US24388	20050708

Priority:

US20040887716 20040709 WO2005US24388 20050708

Probable Assignee: E I DU PONT DE NEMOURS AND CO

Assignee(s): (std): DU PONT ; HAYES RICHARD A ; HAYES RICHARD ALLEN ; EIDU PONT DE NEMOURS AND CO

Assignee(s): E I DU PONT DE NEMOURS AND CO ; E I DU PONT DE NEMOURS AND COMPANY ; E I DU PONT DE NEMOURS CO ; E I DUPONT DE NEMOURS AND COMPANY ; EI DU PONT DE NEMOURS AND CO ; EI DUPONT DE NEMOURS AND CO

Inventor(s): (std): HAYES RICHARD A ; HAYES RICHARD ALLEN ; ALLEN HAYES RICHARD

Inventor(s): HAYES RICHARD ; RICHARD ALLEN HAYES

Agent(s): HOULIHAN2; HOULIHAN²; HOULIHAN² PTY LTD; HIRSCH MARC ROGER; KUMAKURA YOSHIO; OGAWA NOBUO; HAKODA ATSUSHI; HIRAYAMA KOJI; ASAI KENJI; E I DU PONT DE NEMOURS AND COMPANY, LEGAL PATENT RECORDS CENTER; E I DU PONT DE NEMOURS AND CO LEGAL PATENT RECORDS CENTER; TANZER GAIL D; GAIL D

Designated states: AE AG AL AM AT AU AZ BA BB BE BF BG BJ BR BW BY BZ CA CF CG CH CI CM CN CO CR CU CY CZ DE DK DM DZ EC EE EG ES FI FR GA GB GD GE GH GM GN GQ GR GW HR HU ID IE IL IN IS IT JP KE KG KM KP KR KZ LC LK LR LS LT LU LV MA MC MD MG MK ML MN MR MW MX MZ NA NE NG NI NL NO NZ OM PG PH PL PT RO RU SC SD SE SG SI SK SL SM SN SY SZ TD TG TJ TM TN TR TT TZ UA UG US UZ VC VN YU ZA ZM ZW

4) Family number: 32541164 (US2006009610A)

© PatBase

Title: SULFONATED COPOLYETHERESTER COMPOSITIONS FROM HYDROXYALKANOIC ACIDS AND SHAPED ARTICLES PRODUCED THEREFROM

Abstract: The present invention provides certain sulfonated copolyetherester compositions containing hydroxyalkanoic acids and processes for producing such sulfonated aromatic copolyetheresters. The invention further provides shaped articles, preferably in the shape of films, coatings and laminates, having improved thermal properties, wherein the shaped articles are produced from the certain sulfonated copolyetherester compositions. Some of these materials are also biocompostable. The sulfonated copolyetheresters are produced from a mixture of an aromatic dicarboxylic acid component, hydroxyalkanoic acid component, a sulfonate component, a poly(alkylene ether) glycol component, a glycol component, an optional other glycol component, an optional branching agent, and an optional color reducing agent.

Classifications:

International (IPC 8-9): B29D29/00 B32B1/08 B32B27/00 B32B27/10 B32B27/36 B65B53/00 B65D65/40 B65D65/42 B65D65/46 C08F20/00 C08G63/02 C08G63/18 C08G63/66 C08G63/688 C08J5/18 C08J9/00 C08K13/04 C08K3/00 C08L101/00 C08L67/00 C09D167/00 D01F6/62 D01F6/86 D01F6/92 D01F8/14 D02G3/04 (Advanced/Invention);
B29D29/00 B32B1/00 B32B27/00 B32B27/10 B32B27/36 B65B53/00 B65D65/38 B65D65/40 B65D65/46 C08F20/00 C08G63/00 C08J5/18 C08J9/00 C08K13/00 C08K3/00 C08L101/00 C08L67/00 C09D167/00 D01F6/62 D01F6/78 D01F6/92 D01F8/14 D02G3/04 (Core/Invention)

International (IPC 1-7): B32B27/10 B32B27/36 B65D65/40 B65D65/42 B65D65/46 C08G63/688 C08J5/18 C08J9/00 C08K13/04 C08K3/00 C08L67/00 C09D167/00 D01F6/62 D01F6/92 D01F8/14

CPC: Y10T428/1328 Y10T428/1372 Y10T428/1376 Y10T428/2913 C08L67/025 B32B27/36 C08G63/60 C08G63/688 C08L3/02 C08L67/00 C08L2201/06 C09D167/025 D01F6/86 Y10T428/31786 Y10T428/31794 Y10T428/249921 C08K3/013

European: B32B27/36 C08G63/60 C08G63/688 C08L67/00 C08L67/02B C09D167/02B D01F6/86 M08K3/00P5 M08L201/06 M08L3/02

US: 428/221 428/34.9 428/36.4 428/36.5 428/364 428/37.7 428/480 428/482 524/401 525/437 525/444 525/450 528/272 528/272P 528/293 528/296 528/298 528/300 528/301 528/302 528/307 528/308 528/308.6

JP F-Term: 4F100 4F100/AA01/B 4F100/AB01/B 4F100/AG00/B 4F100/AJ04/B 4F100/AJ07/A 4F100/AK01/A 4F100/AK01/B 4F100/AK12/B 4F100/AK41/A 4F100/AK41/J 4F100/AK45/A 4F100/AK46/A 4F100/AK46/J 4F100/AK54/A 4F100/AK54/J 4F100/AL01/A 4F100/AL05/A 4F100/AL06/A 4F100/AP03/B 4F100/BA02 4F100/BA15 4F100/CA23/A 4F100/DE01/A 4F100/DE01/H 4F100/DG10/B 4F100/DG13/B 4F100/DG15/B 4F100/DJ01/B 4F100/EH46/A 4F100/GB15 4F100/JA06/A 4F100/JC00/A 4F100/YY00/A 4J002 4J002/AB01/2 4J002/AB02/2 4J002/AB04/2 4J002/AB05/2 4J002/AD00/2 4J002/AD02/2 4J002/BB03/2 4J002/BB04/2 4J002/BB12/2 4J002/BC03/2 4J002/BD04/2 4J002/BD10/2 4J002/BE03/2 4J002/BG06/2 4J002/CF03/2 4J002/CF10/1 4J002/CF14/1 4J002/CF18/2 4J002/CF19/2 4J002/CL00/2 4J002/DJ00/6 4J002/DJ03/6 4J002/DJ04/6 4J002/DJ05/6 4J002/FB08/6 4J002/FD01/6 4J002/GG01 4J002/GK01 4J029 4J029/AA01 4J029/AB01 4J029/AC02 4J029/AD01 4J029/AD06 4J029/AD07 4J029/AE02 4J029/AE03 4J029/BA02 4J029/BA03 4J029/BA04 4J029/BA05 4J029/BF09 4J029/BF25 4J029/CB05/A 4J029/CB06/A 4J029/CC06/A 4J029/CH06 4J029/EA03 4J029/EA05 4J029/EF02 4J029/EH02 4J029/EH03 4J029/FB17 4J029/FC35 4J029/FC36 4J029/FC38 4J029/HA01 4J029/HB01 4J029/HB02 4J029/JA25/3 4J029/JB13/1 4J029/JB17/1 4J029/JB19/3 4J029/JC03/3 4J029/JC12/3 4J029/JC48/3 4J029/JC57/3 4J029/JF02/1 4J029/JF13/1 4J029/JF14/1 4J029/JF18/1 4J029/JF32/1 4J029/JF36/1 4J029/JF37/1 4J029/JF38/1 4J029/JF47/1 4J029/KE12 4L035 4L035/BB31 4L035/BB71 4L035/EE01 4L036 4L036/MA04 4L036/MA08 4L036/MA39 4L036/PA33 4L036/PA46

JP F-Index: B32B27/36 C08G63/688 C08L101/00 C08L67/00 D01F6/86/301/K D02G3/04

Family:

Publication number	Publication date	Application number	Application date
AU2005265433 AA	20060126	AU20050265433	20050708
AU2005265433 BB	20110526	AU20050265433	20050708
CN1980977 A	20070613	CN200580022602	20050708
CN1980977 B	20130102	CN200580022602	20050708
DE602005036707 D1	20121220	DE200560036707T	20050708
EP1789471 A1	20070530	EP20050772859	20050708
EP1789471 B1	20121024	EP20050772859	20050708
IN00180DN2007 A	20070803	IN2007DN00180	20070108
JP2008506021 T2	20080228	JP20070520566T	20050708
US2006009610 AA	20060112	US20040888046	20040709
US7193029 BB	20070320	US20040888046	20040709
WO06010062 A1	20060126	WO2005US24386	20050708

Priority:

US20040888046 20040709 EP20050772859 20050708 WO2005US24386 20050708

Probable Assignee: E I DU PONT DE NEMOURS AND CO

Assignee(s): (std): E I DU PONT DE NEMOURS AND COMPANY ; DU PONT ; HAYES RICHARD A ; HAYES RICHARD ALLEN ; EIDU PONT DE NEMOURS AND CO

Assignee(s): EI DU PONT DE NEMOURS AND CO ; E I DU PONT DE NEMOURS AND CO ; E I DU PONT DE NEMOURS CO ; E I DUPONT DE NEMOURS AND COMPANY ; EI DUPONT DE NEMOURS AND CO

Inventor(s): (std): HAYES RICHARD A ; HAYES RICHARD ALLEN ; ALLEN HAYES RICHARD

Inventor(s): HAYES RICHARD ; HAYES RICHARD ALLEN BEAUMONT ; RICHARD ALLEN HAYES

Agent(s): HOULIHAN² PTY LTD; HOULIHAN2; HOULIHAN²; MARKS AND CLERK LUXEMBOURG LLP; HIRSCH MARC ROGER; KUMAKURA YOSHIO; OGAWA NOBUO; HAKODA ATSUSHI; HIRAYAMA KOJI; ASAI KENJI; E I DU PONT DE NEMOURS AND COMPANY, LEGAL PATENT RECORDS CENTER; E I DU PONT DE NEMOURS AND CO LEGAL PATENT RECORDS CENTER; GAIL A

Designated states: AE AG AL AM AT AU AZ BA BB BE BF BG BJ BR BW BY BZ CA CF CG CH CI CM CN CO CR CU CY CZ DE DK DM DZ EC EE EG ES FI FR GA GB GD GE GH GM GN GQ GR GW HR HU ID IE IL IN IS IT JP KE KG KM KP KR KZ LC LK LR LS LT LU LV MA MC MD MG MK ML MN MR MW MX MZ NA NE NG NI NL NO NZ OM PG PH PL PT RO RU SC SD SE SG SI SK SL SM SN SY SZ TD TG TJ TM TN TR TT TZ UA UG US UZ VC VN YU ZA ZM ZW

5) Family number: 32541165 (US2006009611A) © PatBase

Title: COPOLYETHERESTER COMPOSITIONS CONTAINING HYDROXYALKANOIC ACIDS AND SHAPED ARTICLES PRODUCED THEREFROM

Abstract: The present invention provides certain aromatic copolyetheresters that include hydroxyalkanoic acid residues, and processes for making the copolyetheresters, and articles containing the copolyetheresters. The copolyetheresters have desirable thermal properties, and can be used in forming shaped articles, such as films, coatings and laminates. The copolyetheresters are produced from a mixture of aromatic dicarboxylic acids, hydroxyalkanoic acids, a poly(alkylene ether) glycol, a glycol component, optional other glycol, optional branching agents, and optional color reducing agent components. Some of the copolyetheresters are biocompostable.

Classifications:
International (IPC 8-9): B32B27/36 C08G63/00 C08G63/02 C08G63/60 C08G63/66 C08L67/02 D01F6/86 D01F6/92 (Advanced/Invention);
B32B27/36 C08G63/00 C08L67/00 D01F6/78 D01F6/92 (Core/Invention)
International (IPC 1-7): C08G63/60 C08G63/66 C08L67/02
CPC: B32B27/10 C08G63/60 C08G63/66 C08L67/00 C08L67/02 C08L67/025 C08L67/04 C08L69/00 C08L77/12 C09D167/00 B32B27/36
European: B32B27/10 B32B27/36 C08G63/60 C08G63/66 C08L67/00 C09D167/00 M08L67/02 M08L67/02B M08L67/04 M08L69/00 M08L77/12
US: 264/176.1 521/125 521/92 525/418 525/437 528/272 528/272P 528/300 528/301
JP F-Term: 4F100 4F100/AA01/B 4F100/AB01/B 4F100/AG00/B 4F100/AJ04/B 4F100/AJ07/A 4F100/AK01/A 4F100/AK01/B 4F100/AK12/B 4F100/AK41/A 4F100/AK41/J 4F100/AK45/A 4F100/AK46/A 4F100/AK46/J 4F100/AK54/A 4F100/AK54/J 4F100/AL01/A 4F100/AL05/A 4F100/AL06/A 4F100/AP03/B 4F100/BA02 4F100/BA15 4F100/CA23/A 4F100/DE01/A 4F100/DE01/H 4F100/DG10/B 4F100/DG13/B 4F100/DG15/B 4F100/DJ01/B 4F100/EH46/A 4F100/GB15 4F100/JA06/A 4F100/JC00/A 4F100/YY00/A 4J029 4J029/AA01 4J029/AB01 4J029/AD01 4J029/AE02 4J029/AE03 4J029/BA01 4J029/BA02 4J029/BA03 4J029/BA04 4J029/BA05 4J029/BD07/A 4J029/BF25 4J029/CB05/A 4J029/CB06/A 4J029/CB10/A 4J029/CB12/A 4J029/CC05/A 4J029/CC06/A 4J029/CE04 4J029/DB07 4J029/DB13 4J029/EA03 4J029/EA05 4J029/EH02 4J029/EH03 4J029/FC02 4J029/FC03 4J029/FC08 4J029/FC16 4J029/FC35 4J029/FC36 4J029/HA01 4J029/HB01 4J029/HB03/A 4J029/JE18/2 4L035 4L035/AA05 4L035/BB31 4L035/EE01 4L035/FF01 4L035/GG01
JP F-Index: B32B27/36 C08G63/60 C08G63/66 D01F6/86/301/C D01F6/92/307/Z

Family:

Publication number	Publication date	Application number	Application date
AU2005265323 AA	20060126	AU20050265323	20050708
AU2005265323 BB	20100708	AU20050265323	20050708
AU2005265323 CA	20110106	AU20050265323	20050708
CN1980976 A	20070613	CN200580022639	20050708
CN1980976 B	20100811	CN200580022639	20050708
DE602005036819 D1	20121227	DE200560036819T	20050708
EP1789470 A1	20070530	EP20050772855	20050708
EP1789470 B1	20121031	EP20050772855	20050708
IN00178DN2007 A	20070803	IN2007DN00178	20070108
JP2008506020 T2	20080228	JP20070520565T	20050708
JP4950043 B2	20120613	JP20070520565T	20050708
US2006009611 AA	20060112	US20040888225	20040709
US7144972 BB	20061205	US20040888225	20040709
WO06010061 A1	20060126	WO2005US24385	20050708

Priority:
US20040888225 20040709 EP20050772855 20050708 WO2005US24385 20050708

Probable Assignee: E I DU PONT DE NEMOURS AND CO

Assignee(s): (std): DU PONT ; HAYES RICHARD A ; HAYES RICHARD ALLEN ; EIDU PONT DE NEMOURS AND CO

Assignee(s): E I DU PONT DE NEMOURS AND CO ; E I DU PONT DE NEMOURS AND COMPANY ; E I DUPONT DE NEMOURS AND COMPANY ; EI DU PONT DE NEMOURS AND CO ; EI DU PONT DE NEMOURS AND CO WILMINGTON ; EI DUPONT DE NEMOURS AND CO

Inventor(s): (std): HAYES RICHARD A ; HAYES RICHARD ALLEN ; ALLEN HAYES RICHARD

Inventor(s): RICHARD ALLEN HAYES ; HAYES RICHARD ALLEN BEAUMONT ; HAYES RICHARD

Agent(s): HOULIHAN²; HOULIHAN² PTY LTD; HOULIHAN2; MARKS AND CLERK LUXEMBOURG LLP; HIRSCH MARC ROGER; KUMAKURA YOSHIO; OGAWA NOBUO; HAKODA ATSUSHI; HIRAYAMA KOJI; ASAI KENJI; E I DU PONT DE NEMOURS AND COMPANY, LEGAL PATENT RECORDS CENTER; E I DU PONT DE NEMOURS AND CO LEGAL PATENT RECORDS CENTER; BARRY DALE; GAIL A

Designated states: AE AG AL AM AT AU AZ BA BB BE BF BG BJ BR BW BY BZ CA CF CG CH CI CM CN CO CR CU CY CZ DE DK DM DZ EC EE EG ES FI FR GA GB GD GE GH GM GN GQ GR GW HR HU ID IE IL IN IS IT JP KE KG KM KP KR KZ LC LK LR LS LT LU LV MA MC MD MG MK ML MN MR MW MX MZ NA NE NG NI NL NO NZ OM PG PH PL PT RO RU SC SD SE SG SI SK SL SM SN SY SZ TD TG TJ TM TN TR TT TZ UA UG US UZ VC VN YU ZA ZM ZW

6) Family number: 41121238 (US2009318430A) © PatBase

Title: MEDICAL USE OF CYCLIN DEPENDENT KINASES INHIBITORS

Abstract: The invention provides the use of a compound for the manufacture of a medicament for the treatment of pain, wherein the compound is a compound of the formula (0):

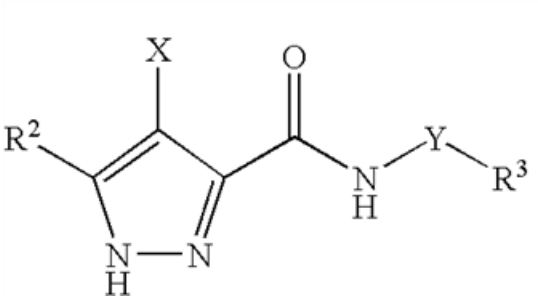

(0)

or a salt or tautomers or N-oxides or solvate thereof; wherein X is a group R^1 -A-NR^4 - or a 5- or 6-membered carbocyclic or heterocyclic ring; A is a bond, SO_2, C-O, NR^g(C-O) or O(C-O) wherein R^g is hydrogen or C_{1-4} hydrocarbyl optionally substituted by hydroxy or C_{1-4} alkoxy; Y is a bond or an alkylene chain of 1, 2 or 3 carbon atoms in length; R^1 is hydrogen; a carbocyclic or heterocyclic group having from 3 to 12 ring members; or a C_{1-8} hydrocarbyl group optionally substituted by one or more substituents selected from halogen, hydroxy, C_{1-4} hydrocarbyloxy, amino, mono- or di-C_{1-4} hydrocarbylamino, and carbocyclic or heterocyclic groups having from 3 to 12 ring members, and wherein 1 or 2 of the carbon atoms of the hydrocarbyl group may optionally be replaced by an atom or group selected from O, S, NH, SO, SO_2; R^2 is hydrogen; halogen; C_{1-4} alkoxy; or a C_{1-4} hydrocarbyl group optionally substituted by halogen, hydroxyl or C_{1-4} alkoxy (e.g. methoxy); R^3 is selected from hydrogen and carbocyclic and heterocyclic groups having from 3 to 12 ring members; and R^4 is hydrogen or a C_{1-4} hydrocarbyl group optionally substituted by halogen (e.g. fluorine), hydroxyl or C_{1-4} alkoxy. The invention also provides the use of the compounds of the formula (0) for the treatment of stroke and for the treatment of polycystic kidney disease.

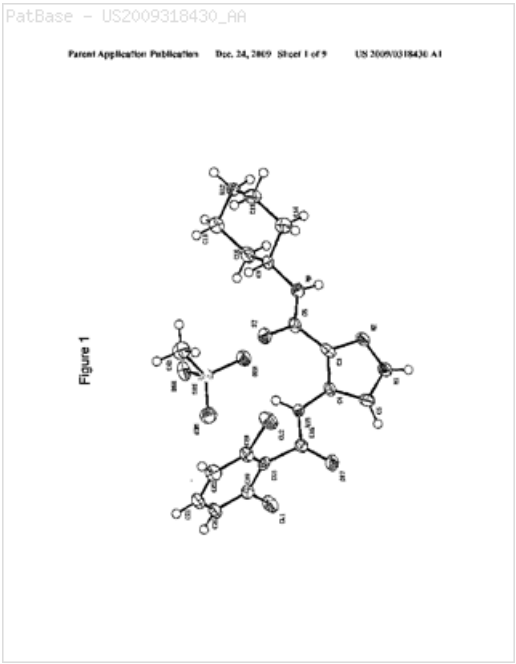

Classifications:

International (IPC 8-9): A61K31/415 A61K31/4155 A61K31/4178 A61K31/422 A61K31/439 A61K31/44 A61K31/4439 A61K31/454 A61K31/496 A61K31/506 A61K31/5377 A61K31/541 A61P13/12 A61P25/00 A61P25/04 A61P29/00 A61P3/06 A61P3/10 A61P43/00 A61P9/06 A61P9/10 A61P9/12 A61P9/14 C07D231/40 C07D401/12 C07D401/14 C07D403/12 C07D405/12 C07D405/14 C07D409/14 C07D413/12 C07D413/14 C07D453/02 C07D471/04 (Advanced/Invention); A61K31/415 A61K31/4155 A61K31/4164 A61K31/422 A61K31/439 A61K31/44 A61K31/4427 A61K31/4523 A61K31/496 A61K31/506 A61K31/5375 A61K31/541 A61P13/00 A61P25/00 A61P29/00 A61P3/00 A61P43/00 A61P9/00 C07D231/00 C07D401/00 C07D403/00 C07D405/00 C07D409/00 C07D413/00 C07D453/00 C07D471/00 (Core/Invention)

CPC: A61K31/415 A61K31/44

European: A61K31/415 A61K31/44

US: 514/227.8 514/236.5 514/326 514/404

JP F-Term: 4C032 4C063 4C063/AA01 4C063/AA03 4C063/BB02 4C063/BB03 4C063/BB09 4C063/CC22 4C063/CC25 4C063/CC29 4C063/CC51 4C063/CC73 4C063/CC75 4C063/CC78 4C063/CC82 4C063/CC92 4C063/DD03 4C063/DD04 4C063/DD06 4C063/DD10 4C063/DD12 4C063/DD22 4C063/EE01 4C064 4C064/AA06 4C064/CC01 4C064/DD01 4C064/EE07 4C064/FF01 4C064/GG03 4C064/GG09 4C065 4C065/AA03 4C065/BB05 4C065/CC01 4C065/DD02 4C065/EE02 4C065/HH01 4C065/JJ01 4C065/KK08 4C065/LL01 4C065/PP09 4C065/PP13 4C086 4C086/AA01 4C086/AA02 4C086/BC36 4C086/BC38 4C086/BC42 4C086/BC50 4C086/BC67 4C086/BC73 4C086/BC88 4C086/CB05 4C086/CB17 4C086/GA02 4C086/GA07 4C086/GA09 4C086/GA12 4C086/GA16 4C086/MA01 4C086/MA04 4C086/NA14 4C086/ZA01 4C086/ZA08 4C086/ZA36 4C086/ZA42 4C086/ZA44 4C086/ZA45 4C086/ZA81 4C086/ZC02 4C086/ZC20 4C086/ZC33 4C086/ZC35 4C201

JP F-Index: A61K31/415 A61K31/4155 A61K31/4178 A61K31/422 A61K31/439 A61K31/4439 A61K31/454 A61K31/496 A61K31/506 A61K31/5377 A61K31/541 A61P13/12 A61P25/00 A61P25/04 A61P3/06 A61P3/10 A61P43/00/111 A61P9/06 A61P9/10 A61P9/10/101 A61P9/12 A61P9/14 C07D231/40 C07D401/12 C07D401/14 C07D403/12 C07D405/12 C07D405/14 C07D409/14 C07D413/12 C07D413/14 C07D453/02 C07D471/04/106/A

Family:

Publication number	Publication date	Application number	Application date
EP2046327 A1	20090415	EP20070766316	20070720
JP2009544602 T2	20091217	JP20090520054T	20070720
US2009318430 AA	20091224	US20070374461	20070720
WO08009954 A1	20080124	WO2007GB02753	20070720

Priority:

US20060832678P 20060721 US20070374461 20070720 WO2007GB02753 20070720

Probable Assignee: ASTEX THERAPEUTICS LTD

Assignee(s): (std): ASTEX THERAPEUTICS LTD ; LYONS JOHN FRANCIS ; PIKE ANDREW

Assignee(s): ASTEX THERAPEUTICS LIMITED

Inventor(s): (std): LYONS JOHN FRANCIS ; PIKE ANDREW

Agent(s): HUTCHINS MICHAEL RICHARD; YAMADA TAKUJI; TANAKA MITSUO; IWASAKI MITSUTAKA; HESLIN ROTHENBERG FARLEY AND MESITI PC

Designated states: AE AG AL AM AT AU AZ BA BB BE BF BG BH BJ BR BW BY BZ CA CF CG CH CI CM CN CO CR CU CY CZ DE DK DM DO DZ EC EE EG ES FI FR GA GB GD GE GH GM GN GQ GR GT GW HN HR HU ID IE IL IN IS IT JP KE KG KM KN KP KR KZ LA LC LI LK LR LS LT LU LV LY MA MC MD ME MG MK ML MN MR MT MW MX MY MZ NA NE NG NI NL NO NZ OM PG PH PL PT RO RS RU SC SD SE SG SI SK SL SM SN SV SY SZ TD TG TJ TM TN TR TT TZ UA UG US UZ VC VN ZA ZM ZW

7) Family number: 30103266 (US2002006613A) © PatBase

Title: METHODS AND COMPOSITIONS FOR THE IDENTIFICATION AND ASSESSMENT OF CANCER THERAPIES

Abstract: The present invention is directed to the identification of markers that can be used to determine whether cancer cells are sensitive or resistant to a therapeutic agent. The present invention is also directed to the identification of therapeutic targets. Nucleic acid arrays were used to determine the level of expression of approximately 6500 nucleic acid sequences (genes) found in 54 different solid tumor cancer cell lines selected from the NCI 60 cancer cell line series. After the level of expression was determined for each of the 6500 genes in each of the 54 cancer cell lines, statistical analysis was used to identify genes whose expression correlated with sensitivity or resistance to any one of 171 different anti-cancer compounds. Expression analysis was also used to identify genes associated with resistance or sensitivity to TAXOL in a number of cancer cell lines, clinical samples, and a human mammary epithelial cell primary cell line. The invention features a number of "sensitivity genes." These are genes that are expressed in most or all cell lines that are sensitive to treatment with an agent and which are not expressed (or are expressed at a rather low level) in cells that are resistant to treatment with that agent. The invention also features a number of "resistance genes." These are genes that are expressed in most or all cell lines that are resistant to treatment with an agent and which are not expressed (or are expressed at a rather low level) in cells that are sensitive to treatment with that agent.

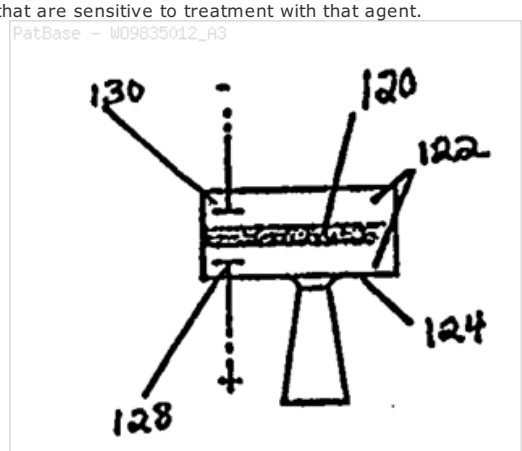

Classifications:
International (IPC 8-9): B01L3/00 C07H21/04 C12M1/34 C12N15/09 C12Q1/68 G01N21/03 G01N21/05 G01N21/64 G01N21/78 G01N27/447 G01N33/487 G01N33/50 G01N33/53 (Advanced/Invention);
B01L3/00 C12N15/09 G01N21/03 G01N33/50 (Advanced/Non-invention);
C12Q1/68 (Core/Invention);
B01L3/00 (Core/Non-invention)
International (IPC 1-7): C07H21/02 C07H21/04 C12M1/34 C12N15/09 C12Q1/68 G01N21/78 G01N33/50 G01N33/53
CPC: C12Q2600/106 C12Q2600/136 C12Q1/6886 Y10T436/143333 C12Q1/6869 B01J2219/00707 B01L3/5027 C12Q1/6809 G01N21/05 G01N21/6428 G01N33/48721 G01N2021/0346 G01N2021/6432 G01N2021/6439 G01N2021/6441 G01N2021/6482 Y10S435/97 Y10S435/973 C12Q2565/631
European: C12Q1/68A6 C12Q1/68E C12Q1/68M6B G01N21/05 G01N21/64H G01N21/64P G01N21/64R G01N33/487B5 L01J219/00C6P4 L01L3/5027 S01N21/03K S01N21/64H4 S01N21/64H7 S01N21/64H7A S01N21/64P10
US: 204/182.8 204/451 250/459.1 250/459.100P 422/82.08 435/149 435/287.1 435/287.2 435/375 435/5 435/6 435/6.1 435/6.12 435/6.120P 435/6.16 435/6.160P 435/6P 435/7.1 435/7.100S 435/71 435/94 435/970 435/973 436/94 536/23.1 536/23.100S 536/24.3 536/24.300S 546/33 548/416 549/382 935/77 935/78
JP F-Term: 2G045 2G045/AA35 2G045/DA13 2G045/FA11 2G045/FB02 2G045/FB05 2G045/FB07 2G045/FB12 2G045/GC15 2G054 2G054/AA06 2G054/AB10 2G054/CA22 2G054/CE02 2G054/EA03 2G054/EA10 2G054/EB01 2G054/FA07 2G054/FA33 2G054/FA50 2G054/GA04 2G054/GA08 2G054/GA09 2G054/JA05 3C082 4B024 4B024/AA11 4B024/AA19 4B024/AA20 4B024/CA01 4B024/CA11 4B024/HA11 4B024/HA19 4B024/HA20 4B063 4B063/QA01 4B063/QQ42 4B063/QR50 4B063/QR66 4B063/QR84 4B063/QS36 4B063/QX07
JP F-Index: B82Y15/00 B82Y5/00 B82Y99/00 C12N15/00/A C12Q1/68/A C12Q1/6809/C C12Q1/6809/Z C12Q1/6869/C C12Q1/6869/Z G01N21/78/C G01N33/50/P G01N33/50/ZNM/P G01N33/53/M
JP Facet: ZNM

Family:

Publication number	Publication date	Application number	Application date
AT273381 E	20040815	AT19980906490T	19980211
AU199861703 A1	19980826	AU19980061703	19980211
AU762888 B2	20030710	AU19980061703	19980211
CA2281205 AA	19990811	CA19982281205	19980211
CN1251609 A	20000426	CN19988003852	19980211
DE69825601 D1	20040916	DE19986025601	19980211
DE69825601 T2	20050428	DE19986025601T	19980211
EP1009802 A2	20000621	EP19980906490	19980211
EP1009802 B1	20040811	EP19980906490	19980211
IL131332 A0	20010128	IL19980131332	19980211
IL131332 A1	20030731	IL19980131332	19980211
IL156002 A0	20031214	IL19980156002	19980211
JP2001514739 T2	20010911	JP19980535104T	19980211
JP3935509 B2	20070627	JP19980535104T	19980211
US2002006613 AA	20020117	US19990374554	19990813
US2002110818 AA	20020815	US20010928668	20010813
US2002119455 AA	20020829	US20010852968	20010510
US2011210272 AA	20110901	US20110985905	20110106
US2012217161 AA	20120830	US20120432959	20120328
US2014199209 AA	20140717	US20130034407	20130923
US6355420 BA	20020312	US19980134411	19980813
US6403311 BA	20020611	US19990374415	19990813
US8168380 BB	20120501	US20010852968	20010510
US9745625 BB	20170829	US20130034407	20130923
WO9835012 A2	19980813	WO1998US03024	19980211
WO9835012 A3	19990211	WO1998US03024	19980211

Priority:

US19970037921P 19970212
US19980071940P 19980120
US19980096662P 19980813
US19980105968P 19981028
US19990374554 19990813
US20010928668 20010813
US20130034407 20130923
US19970037921P 19970212
WO1998US03024 19980211
US19980134411 19980813
US19990233611P 19990119
US19990374415 19990813
US20110985905 20110106
US19970064687P 19971105
US19980079399P 19980326
US19980096666P 19980813
US19990322864 19990528
US20010852968 20010510
US20120432959 20120328

Probable Assignee: LIFE TECHNOLOGIES CORP

Assignee(s): (std): CHAN EUGENE Y ; EUGENE Y CHAN ; LIFE TECH CORP ; US GENOMICS INC ; US GENOMICS ; LIFE TECHNOLOGIES CORP

Assignee(s): C2 BIOTECHNOLOGIES INC ; SILICON VALLEY BANK ; SHYJAN ANDREW W ; VAN HUFFEL CHRISTOPHE ; MILLENNIUM PHARMACEUTICAL INC ; U S GENOMICS INC

Inventor(s): (std): CHAN EUGENE Y ; SHYJAN ANDREW W ; VAN HUFFEL CHRISTOPHE ; EUGENE Y CHAN

Agent(s): PIZZEYS; PIZZEYS PATENT AND TRADE MARK ATTORNEYS PTY LTD; SMART AND BIGGAR; SELIGSOHN GABRIELI AND CO

Designated states: AL AM AT AU AZ BA BB BE BF BG BJ BR BY CA CF CG CH CI CM CN CU CZ DE DK EE ES FI FR GA GB GE GH GM GN GR GW HU ID IE IL IS IT JP KE KG KP KR KZ LC LI LK LR LS LT LU LV MC MD MG MK ML MN MR MW MX NE NL NO NZ PL PT RO RU SD SE SG SI SK SL SN SZ TD TG TJ TM TR TT UA UG US UZ VN YU ZW

8) Family number: 33376301 (RU2142878C)

© PatBase

Title: MANUFACTURED ARTICLE, METHOD OF THIS ARTICLE MANUFACTURE, SYSTEM FOR THIS ARTICLE MANUFACTURE

Abstract: FIELD: articles, methods and equipment for their manufacture. SUBSTANCE: invention includes manufacture of sheets having matrix filled with numerous inorganic substances produced by mixing of organic polymer binder, water, one or more inorganic aggregate materials, fibers and selected additional mixtures in preset proportions to obtain sheet with preset properties. Mixtures with inorganic substances are formed into sheets by the first extrusion of mixture and subsequent passing of extruded material through rolls. Sheets rolled by rolls are dried by accelerated method to obtain hardened sheet by rolling with hot rollers and/or in drying chamber. Sheets containing inorganic substances may have properties essentially similar to sheets manufactured from traditional such as paper, cardboard, polystyrene, plastic and metal. Such sheets may be rolled, pressed, marked, perforated, bent or cemented. Particularly, these sheets are applicable in mass manufacture of such articles as food containers and containers for beverages, and as packing materials. EFFECT: manufactured ecologically safe high-quality material and articles. 191 cl, 26 dwg

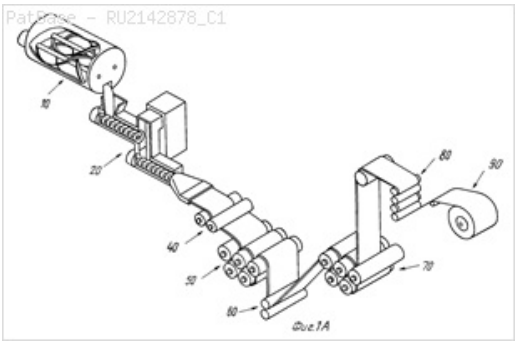

Classifications:

International (IPC 8-9): B05B11/00 B05C5/02 B28B1/00 B28B1/52 B28B11/00 B28B21/00 B28B21/72 B28B23/00 B28B3/12 B28B3/20 B28C5/40 B29C43/00 B29C43/02 B29C43/08 B29C43/22 B29C43/24 B29C43/34 B29C43/36 B29C43/46 B29C49/00 B29C51/00 B29C53/06 B29C53/58 B29C55/18 B29C67/24 B29C70/50 B29C71/00 B31B17/00 B32B1/02 B32B1/08 B32B13/00 B32B13/02 B32B27/04 B32B27/20 B32B37/12 B32B5/02 B32B9/00 B65D43/16 B65D65/38 B65D65/46 C04B14/02 C04B14/06 C04B16/02 C04B20/00 C04B22/04 C04B24/14 C04B24/24 C04B24/38 C04B26/00 C04B26/02 C04B26/28 C04B28/00 C04B28/02 C04B40/00 C08J5/18 C08K13/02 C08L1/00 C08L1/28 C08L101/00 C08L29/02 C08L29/04 C08L3/00 C08L3/02 C08L33/02 C08L33/24 C08L39/00 C08L39/06 C08L5/02 C08L5/12 C08L5/14 C08L71/00 C08L71/02 C08L75/00 C08L89/06 C08L91/08 C08L97/02 C09D133/04 C09D133/06 C09D161/20 C09D161/28 C09D167/00 C09D167/04 C09D171/00 C09D171/02 D21F11/00 E05D1/02 (Advanced/Invention);
B05C5/02 B28B21/00 B29C43/08 B29C53/58 B32B13/00 B32B37/12 C08L1/00 C08L101/00 C08L39/00 C08L71/00 C08L75/00 C09D133/04 C09D133/06 C09D161/20 C09D167/00 C09D167/04 C09D171/00 D21F11/00 (Advanced/Non-invention);
B05B11/00 B28B1/00 B28B1/52 B28B11/00 B28B21/00 B28B23/00 B28B3/00 B28B3/20 B28C5/00 B29C43/00 B29C43/02 B29C43/22 B29C43/24 B29C43/34 B29C43/36 B29C43/44 B29C49/00 B29C51/00 B29C53/00 B29C55/18 B29C67/24 B29C70/04 B29C71/00 B31B17/00 B32B1/00 B32B13/00 B32B27/04 B32B27/20 B32B5/02 B32B9/00 B65D43/16 B65D65/38 B65D65/46 C04B14/02 C04B16/00 C04B20/00 C04B22/00 C04B24/00 C04B26/00 C04B28/00 C04B40/00 C08J5/18 C08K13/00 C08L1/00 C08L101/00 C08L29/00 C08L3/00 C08L33/00 C08L39/00 C08L5/00 C08L71/00 C08L75/00 C08L89/00 C08L91/00 C08L97/00 C09D133/04 C09D133/06 C09D161/20 C09D167/00 C09D167/04 C09D171/00 D21F11/00 E05D1/00 (Core/Invention);
B05C5/02 B29C43/04 B32B37/12 (Core/Non-invention)

International (IPC 1-7): B28B21/00 B28B21/72 B32B1/02 B32B1/08 B32B13/00 B32B3/06 B32B5/12 C04B26/00 C04B28/02 C08L101/00 C08L29/04 C08L3/00 C08L33/02 C08L33/24 C08L39/06 C08L71/02 C08L75/00 C08L91/08 C09D133/06 C09D161/28 C09D167/04 C09D171/02 D21F11/00 E05D1/02

CPC: Y02W30/97 B05B11/0037 B28B1/00 B28B1/52 B28B3/126 B28B3/20 B28B11/00 B28B11/003 B28B11/008 B28B23/00 B28B23/0081 B28B23/0087 B29C43/00 B29C43/003 B29C43/08 B29C43/222 B29C43/24 B29C43/34 B29C43/46 B29C49/0005 B29C51/002 B29C53/063 B29C53/58 B29C55/18 B29C67/24 B29C67/242 B29C70/50 B29C71/0009 B29C2043/022 B29C2043/023 B29C2043/3433 B29C2043/3689 B29C2043/463 B29C2043/464 B29C2043/465 B29C2043/466 B29C2795/007 B29K2001/00 B29K2003/00 B29K2005/00 B29K2089/00 B29K2105/04 B29K2105/12 B29K2105/16 B29L2024/00 B29L2031/608 B29L2031/712 B29L2031/7132 B31D1/005 B32B5/02 B32B9/00 B32B27/04 B32B37/12 B65D43/162 B65D65/38 B65D65/466 B65D2565/385 C04B14/064 C04B16/02 C04B20/002 C04B22/04 C04B24/14 C04B24/38 C04B26/00 C04B26/02 C04B26/026 C04B26/28 C04B26/285 C04B28/00 C04B28/02 C04B40/00 C04B40/0092 C04B2111/00129 C04B2111/00612 C04B2111/00948 C04B2111/50 C08J5/18 C08J2323/02 C08L1/28 C08L1/286 C08L3/00 C08L3/02 C08L5/02 C08L5/12 C08L5/14 C08L89/06 C08L97/02 E05Y2900/602 B31B50/32 B31B2105/0022 B32B1/02 B32B1/08 B32B5/18 B32B13/04 B32B13/06 B32B13/12 B32B13/14 B32B27/34 B32B2266/0228 B32B2439/00 B32B2597/00 B32B27/20 E05D1/02 B29C48/001 B29C48/0011 B29C48/0012 B29C48/0017 B29C48/0019 B29C48/0022 B29C48/07 B29C48/08 B29C48/09 B29C48/13 B05B1/34 B32B13/02

European: B05B11/00B5 B28B1/00 B28B1/52 B28B11/00 B28B11/00E B28B11/00E3 B28B23/00 B28B23/00Z B28B23/00Z1 B28B3/12C B28B3/20 B29C43/00B B29C43/22B B29C43/24 B29C43/34 B29C43/46 B29C47/00J5 B29C49/00B B29C51/00B B29C53/06B B29C55/18 B29C67/24 B29C67/24C B29C70/50 B29C71/00C B31B1/32 B31B17/00 B31D1/00H1 B32B13/02 B32B27/04 B32B27/20 B32B5/02 B32B9/00 B65D43/16B B65D65/38 B65D65/46C C04B14/06G C04B16/02 C04B20/00D2 C04B22/04 C04B24/14 C04B24/38 C04B26/00 C04B26/02 C04B26/02B C04B26/28 C04B26/28B C04B28/00 C04B28/02 C04B40/00 C04B40/00W C08J5/18 C08L1/28 C08L1/28F C08L3/00 C08L3/02 C08L5/12 C08L5/14 C08L89/06 C08L97/02 E05D1/02 L29C43/00 L29C43/02B1 L29C43/02B2 L29C43/08 L29C43/34B L29C43/36H2 L29C43/46 L29C43/46A2 L29C43/46A3 L29C43/46A4 L29C43/46B L29C47/00J4 L29C47/00J5 L29C47/00J6 L29C47/00L L29C47/00L12 L29C47/00L4 L29C47/00L5 L29C47/00L7 L29C47/00L9 L29C53/58 L29C795/00D L29K1/00 L29K105/04 L29K105/12 L29K105/16 L29K3/00 L29K5/00 L29K89/00 L29L24/00 L29L31/60C L29L31/712 L29L31/7132 L31B201/26A1A L31B217/08A L32B31/00A8B L32B37/12 L65D565/38Y7 M04B111/00M14 M04B111/00T6 M04B111/00T66 M04B111/50 M08J323/02 P05D1/02 P05Y900/602

JP F-Term: 4F100 4F100/AA00/C 4F100/AA03/B 4F100/AA07/A 4F100/AA07/H 4F100/AA08/A 4F100/AA08/B 4F100/AA08/H 4F100/AA19/B 4F100/AA19/H 4F100/AA20/B 4F100/AA20/H 4F100/AB01/C 4F100/AC03/H 4F100/AC05/A 4F100/AC05/H 4F100/AC06/H 4F100/AC10/A 4F100/AC10/H 4F100/AE02/A 4F100/AE02/H 4F100/AE03/H 4F100/AE04/H 4F100/AE05/A 4F100/AE05/H 4F100/AE06/H 4F100/AE07/A 4F100/AE07/H 4F100/AG00/H 4F100/AJ02/H 4F100/AJ04/B 4F100/AJ05/C 4F100/AJ06/A 4F100/AJ07/B 4F100/AJ07/H 4F100/AJ09/H 4F100/AJ11/B 4F100/AK04/B 4F100/AK12/A 4F100/AK12/C 4F100/AK15/B 4F100/AK21/A 4F100/AK21/B 4F100/AK25/A 4F100/AK25/B 4F100/AK36/B 4F100/AK48/C 4F100/AK49/A 4F100/AK51/B 4F100/AK70/C 4F100/AL09/B 4F100/AL09/C 4F100/AS00/A 4F100/BA03 4F100/BA07 4F100/BA10/B 4F100/BA12 4F100/BA13 4F100/BA44 4F100/CA23/A 4F100/CA23/B 4F100/CA23/C 4F100/DA02 4F100/DA03 4F100/DB16/B 4F100/DE01/A 4F100/DE01/H 4F100/DG01/A 4F100/DG01/H 4F100/DG06/C 4F100/DG10/A 4F100/DG10/C 4F100/DG18/A 4F100/DG19/A 4F100/DH01/A 4F100/DH01/C 4F100/DJ01/A 4F100/DJ01/C 4F100/DJ01/H 4F100/EA06/1 4F100/EC18/2 4F100/EG00/2

4F100/EH00/1 4F100/EH17/2 4F100/EH51/2 4F100/EJ19/2 4F100/EJ28/2 4F100/EJ32/2 4F100/EJ33/2 4F100/EJ38/A 4F100/EJ40/2 4F100/EJ42/2 4F100/EJ82/2 4F100/EJ86/2 4F100/EK03 4F100/EK06 4F100/GB17 4F100/GB18 4F100/GB71 4F100/HB22 4F100/JA13/H 4F100/JA14/A 4F100/JB10 4F100/JK02/A 4F100/JK13/B 4F100/JL02 4F100/JL03/A 4F100/JL03/H 4F100/JM01/A 4F100/JM10/A 4F100/JM10/H 4G012 4G112 4G112/PA04 4G112/PA06 4G112/PA07 4G112/PA08 4G112/PA09 4G112/PA10 4G112/PA11 4G112/PA14 4G112/PA17 4G112/PA19 4G112/PA20 4G112/PA24 4G112/PA30 4G112/PB02 4G112/PB04 4G112/PB06 4G112/PB08 4G112/PB10 4G112/PB17 4G112/PB18 4G112/PB19 4G112/PB21 4G112/PB23 4G112/PB25 4G112/PB29 4G112/PB31 4G112/PB35 4G112/PB36 4G112/PB37 4G112/PB40 4G112/PC02 4G112/PC03 4G112/PC08 4G112/PC12 4G112/PC13 4G112/PC15 4G112/PD01 4G112/PE01 4G112/PE03 4G112/PE04 4G112/PE07 4J002 4J002/AB01/X 4J002/AB03/W 4J002/AB04/3 4J002/AB04/W 4J002/AB05/3 4J002/AB05/W 4J002/AD01/3 4J002/AD01/W 4J002/AD02/W 4J002/AD03/W 4J002/BE02/W 4J002/BE04/W 4J002/BG01/W 4J002/BG12/W 4J002/CF19/W 4J002/CH02/W 4J002/DA06/6 4J002/DE08/7 4J002/DE14/7 4J002/DE19/7 4J002/DE23/7 4J002/DG05/7 4J002/DH04/7 4J002/DJ01/6 4J002/DJ01/7 4J002/DJ05/7 4J002/FA04/6 4J002/FA04/X 4J002/FA09/7 4J002/FD01/3 4J002/FD01/6 4J002/FD01/X 4J002/GG01 4J002/GG02 4J038 4J038/AA01/1 4J038/BA09/1 4J038/BA21/1 4J038/CB02/1 4J038/CD03/1 4J038/CE02/1
JP F-Index: B32B1/02 B32B1/08/Z B32B13/00 C04B26/00 C04B28/02 C08L1/00 C08L101/00 C08L29/02/Z C08L29/04 C08L3/00 C08L33/02 C08L33/24 C08L39/00 C08L39/06 C08L71/00 C08L71/02 C08L75/00 C08L91/08 C09D133/04 C09D133/06 C09D161/20 C09D161/28 C09D167/00 C09D167/04 C09D171/00/Z C09D171/02
JP Facet: LAL LAV LGW LHR LJW LJY LQA LTB NFY PFZ PHH PLC PLQ

Family:

Publication number	Publication date	Application number	Application date
AU5729794 A1	19940622	AU19940057297	19931124
AU675687 B2	19970213	AU19940057297	19931124
BRPI9307526 A	19990831	BR1993PI07526	19931124
CA2143004 C	20070501	CA19932143004	19931124
EP0678068 A1	19951025	EP19940903306	19931124
EP0678068 A4	19980401	EP19940903306	19931124
JP9507463 T2	19970729	JP19930513404T	19931124
KR100316469 B1	20020228	KR19950702104	19931124
KR19957004099 A	19951117	KR19957002104	19931124
KR950704099 A	19951117	KR19950702104	19950525
PH1993047323 B	19990705	PH19930047323	19931125
RU2142878 C1	19991220	RU19950114456	19931124

Priority:

US19920982383 19921125 US19930152354 19931119 US19930154436 19931119
WO1993US11490 19931124

Probable Assignee: E KHASHOGGI IND LLC

Assignee(s): (std): KHASHOGGI E IND

Assignee(s): I KHASHIODZHI INDASTRIES ; E KHASHOGGI INDUSTRIES ; E KHASHOGGI INDUSTRIES LLC ; HODSON SIMON K ; ANDERSEN PER JUST ; E KASHOGGI IND ; E KASHOGGI INDUSTRIES ; E KHASHOGGI IND ; E KHASHOGGI IND LLC

Inventor(s): (std): ANDERSEN PER JUST ; HODSON SIMON K

Inventor(s): ANDERSEN PER DZHAST ; KHODSON SIMON ; PER JUST ANDERSEN ; SIMON K HODSON

Agent(s): DAVIES COLLISON CAVE; DAVIES COLLISON CAVE PTY LTD; CASSAN MACLEAN

Designated states: AT BE CH DE DK ES FR GB GR IE IT LI LU MC NL PT SE

9) Family number: 33376306 (AU699154B) © PatBase

Title: SHEETS AND ARTCILES MADE FROM HIGHLY INORGANICALLY FILLED COMPOSITIONS, AND METHODS FOR MAKING SAME

Abstract: 1. A sheet having an inorganically filled matrix comprising: a water-dispersible organic polymer binder; a fibrous material substantially homogeneously dispersed throughout the inorganically filled matrix; and an inorganic aggregate material having a concentration in a range from about 40 percent to about 95 percent by weight of total solids in the inorganically filled matrix; wherein the inorganically filled matrix has a thickness less than about 1 cm. I" sss J -i
Classifications:
International (IPC 8-9): B05B11/00 B05C5/02 B28B1/00 B28B1/52 B28B11/00 B28B21/00 B28B21/72 B28B23/00 B28B3/12 B28B3/20 B29C43/00 B29C43/02 B29C43/08 B29C43/22 B29C43/24 B29C43/34 B29C43/36 B29C43/46 B29C49/00 B29C51/00 B29C53/06 B29C53/58 B29C55/18 B29C67/24 B29C70/50 B29C71/00 B31B17/00 B32B1/02 B32B1/08 B32B13/00 B32B13/02 B32B27/04 B32B27/20 B32B37/12 B32B5/02 B32B9/00 B65D43/16 B65D65/38 B65D65/46 C04B14/06 C04B16/02 C04B20/00 C04B22/04 C04B24/14 C04B24/38 C04B26/00 C04B26/02 C04B26/28 C04B28/00 C04B28/02 C04B40/00 C08J5/18 C08L1/00 C08L1/28 C08L101/00 C08L29/02 C08L29/04 C08L3/00 C08L3/02 C08L33/02 C08L33/24 C08L39/00 C08L39/06 C08L5/02 C08L5/12 C08L5/14 C08L71/00 C08L71/02 C08L75/00 C08L89/06 C08L91/08 C08L97/02 C09D133/04 C09D133/06 C09D161/20 C09D161/28 C09D167/00 C09D167/04 C09D171/00 C09D171/02 D21F11/00 E05D1/02 (Advanced/Invention);
B05C5/02 B28B21/00 B29C43/08 B29C53/58 B32B13/00 B32B37/12 C08L1/00 C08L101/00 C08L39/00 C08L71/00 C08L75/00 C09D133/04 C09D133/06 C09D161/20 C09D167/00 C09D167/04 C09D171/00 D21F11/00 (Advanced/Non-invention);
B28B21/00 C08J5/18 D21F11/00 (Core/Invention);
B32B37/12 (Core/Non-invention)
International (IPC 1-7): B28B21/00 B28B21/72 B32B1/08 B32B13/00 B32B3/06 B32B5/12 C08J5/18
CPC: Y02W30/97 B05B11/0037 B28B1/00 B28B1/52 B28B3/126 B28B3/20 B28B11/00 B28B11/003 B28B11/008 B28B23/00 B28B23/0081 B28B23/0087 B29C43/00 B29C43/003 B29C43/08 B29C43/222 B29C43/24 B29C43/34 B29C43/46 B29C49/0005 B29C51/002

B29C53/063 B29C53/58 B29C55/18 B29C67/24 B29C67/242 B29C70/50 B29C71/0009 B29C2043/022 B29C2043/023 B29C2043/3433 B29C2043/3689 B29C2043/463 B29C2043/464 B29C2043/465 B29C2043/466 B29C2795/007 B29K2001/00 B29K2003/00 B29K2005/00 B29K2089/00 B29K2105/04 B29K2105/12 B29K2105/16 B29L2024/00 B29L2031/608 B29L2031/712 B29L2031/7132 B31D1/005 B32B5/02 B32B9/00 B32B27/04 B32B37/12 B65D43/162 B65D65/38 B65D65/466 B65D2565/385 C04B14/064 C04B16/02 C04B20/002 C04B22/04 C04B24/14 C04B24/38 C04B26/00 C04B26/02 C04B26/026 C04B26/28 C04B26/285 C04B28/00 C04B28/02 C04B40/00 C04B40/0092 C04B2111/00129 C04B2111/00612 C04B2111/00948 C04B2111/50 C08J5/18 C08J2323/02 C08L1/28 C08L1/286 C08L3/00 C08L3/02 C08L5/02 C08L5/12 C08L5/14 C08L89/06 C08L97/02 E05Y2900/602 B31B50/32 B31B2105/0022 B32B1/02 B32B1/08 B32B5/18 B32B13/04 B32B13/06 B32B13/12 B32B13/14 B32B27/20 B32B27/34 B32B2266/0228 B32B2439/00 B32B2597/00 B29C48/001 B29C48/0011 B29C48/0012 B29C48/0017 B29C48/0019 B29C48/0022 B29C48/07 B29C48/08 B29C48/09 B29C48/13 B05B1/34 B32B13/02 E05D1/02
European: B05B11/00B5 B28B1/00 B28B1/52 B28B11/00 B28B11/00E B28B11/00E3 B28B23/00 B28B23/00Z B28B23/00Z1 B28B3/12C B28B3/20 B29C43/00B B29C43/22B B29C43/24 B29C43/34 B29C43/46 B29C47/00J5 B29C49/00B B29C51/00B B29C53/06B B29C55/18 B29C67/24 B29C67/24C B29C70/50 B29C71/00C B31B1/32 B31B17/00 B31D1/00H1 B32B13/02 B32B27/04 B32B27/20 B32B5/02 B32B9/00 B65D43/16B B65D65/38 B65D65/46C C04B14/06G C04B16/02 C04B20/00D2 C04B22/04 C04B24/14 C04B24/38 C04B26/00 C04B26/02 C04B26/02B C04B26/28 C04B26/28B C04B28/00 C04B28/02 C04B40/00 C04B40/00W C08J5/18 C08L1/28 C08L1/28F C08L3/00 C08L3/02 C08L5/02 C08L5/12 C08L5/14 C08L89/06 C08L97/02 E05D1/02 L29C43/00 L29C43/02B1 L29C43/02B2 L29C43/08 L29C43/34B L29C43/36H2 L29C43/46 L29C43/46A2 L29C43/46A3 L29C43/46A4 L29C43/46B L29C47/00J4 L29C47/00J5 L29C47/00J6 L29C47/00L L29C47/00L12 L29C47/00L4 L29C47/00L5 L29C47/00L7 L29C47/00L9 L29C53/58 L29C795/00D L29K1/00 L29K105/04 L29K105/12 L29K105/16 L29K3/00 L29K5/00 L29K89/00 L29L24/00 L29L31/60C L29L31/712 L29L31/7132 L31B201/26A1A L31B217/08A L32B37/12 L65D565/38Y7 M04B111/00M14 M04B111/00T6 M04B111/00T66 M04B111/50 M08J323/02 P05D1/02 P05Y900/602

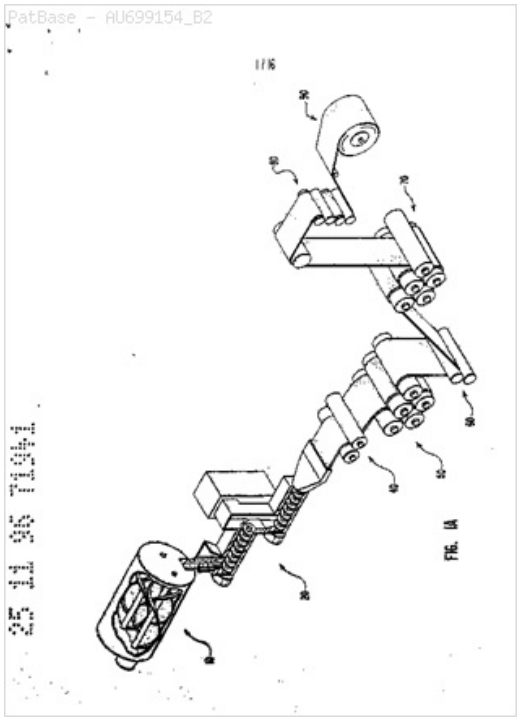

Family:

Publication number	Publication date	Application number	Application date
AU199457297 A1	19940622	AU19940057297	19931124
AU199671941 A1	19970306	AU19960071941	19961125
AU699154 B2	19981126	AU19960071941	19961125

Priority:

US19920982383 19921125 US19930152354 19931119 US19930154436 19931119
AU19940057297 19931124 WO1993US11490 19931124

Probable Assignee: KHASHOGGI E IND

Assignee(s): (std): CONCRETE TECHNOLOGY CORP ; E KHASHOGGI IND LLC ; KHASHOGGI E IND

Assignee(s): E KHASHOGGI HOLDINGS LP ; E KHASHOGGI IND

Inventor(s): (std): ANDERSEN PER JUST ; HODSON SIMON K ; SIMON K HODSON ; PER JUST ANDERSEN

Agent(s): DAVIES COLLISON CAVE; DAVIES COLLISON CAVE PTY LTD

10) Family number: 33376307 (AU199463544A)

© PatBase

Title: HYDRAULICALLY SETTABLE MIXTURES

Abstract: Compositions, methods and systems for manufacturing arcticles, including containers and packaging materials, from hydraulically settable and inorganically filled materials are disclosed. Suitable compositions are prepared by mixing together a hydraulically settable binder or organic binder, water, and appropriate additives, such as aggregates, fibers, and rheology-modifying agents, which impart predetermined properties so that an article formed therefrom has the desired performance criteria. The desired article can be molded from the mixture using a variety of moding processes including: die pressing, injection modling, blow molding, jiggering, wet sheet molding, and dry sheet molding. The sheet forming processes require the mixture to first be fashioned into a sheet, such as by the use of an extruder (12) or rollers, after which the sheet is formed, it is hardened. Printed indicya and a coating can then the applied.

Classifications:
International (IPC 8-9): B05B11/00 B05C1/08 B05C3/18 B05C5/02 B28B1/00 B28B1/52 B28B11/00 B28B13/02 B28B13/06 B28B23/00 B28B3/00 B28B3/02 B28B3/12 B28B3/20 B28B3/22 B28B3/26 B28B7/42 B28C5/14 B28C7/02 B29C43/00 B29C43/02 B29C43/08 B29C43/22 B29C43/24 B29C43/34 B29C43/36 B29C43/38 B29C43/46 B29C45/00 B29C49/00 B29C49/04 B29C49/06 B29C51/00 B29C51/04 B29C51/08 B29C51/10 B29C53/06 B29C53/58 B29C55/18 B29C65/00 B29C67/24 B29C70/50 B29C71/00 B31B17/00 B32B13/02 B32B27/04 B32B27/20 B32B37/12 B32B5/02 B32B9/00 B65D43/16 B65D65/38 B65D65/46 C04B16/02 C04B20/00 C04B24/00 C04B26/00 C04B26/02 C04B26/28 C04B28/00 C04B28/02 C04B38/00 C04B38/02 C04B40/00 C04B41/45 C04B41/61 C08J5/00 C08J5/18 C08L1/28 C08L3/00 C08L3/02 C08L5/02 C08L5/12 C08L5/14 C08L89/06 C08L97/02
E05D1/02 (Advanced/Invention);
B05B11/00 B05C1/08 B05C3/18 B05C5/02 B29C43/08 B29C49/04 B29C51/08 B29C53/58 B29C65/00 B32B37/12 C08J5/00 (Advanced/Non-invention);
B28B1/00 B28B1/52 B28B11/00 B28B13/00 B28B23/00 B28B3/00 B28B3/02 B28B3/20 B28B3/26 B28B7/40 B28C5/00 B28C7/00

B29C43/00 B29C43/02 B29C43/22 B29C43/24 B29C43/34 B29C43/36 B29C43/44 B29C45/00 B29C49/00 B29C49/06 B29C51/00 B29C51/10 B29C53/00 B29C55/18 B29C65/00 B29C67/24 B29C70/04 B29C71/00 B31B17/00 B32B13/00 B32B27/04 B32B27/20 B32B5/02 B32B9/00 B65D43/16 B65D65/38 B65D65/46 C04B16/00 C04B20/00 C04B24/00 C04B26/00 C04B28/00 C04B38/00 C04B38/02 C04B40/00 C04B41/45 C04B41/60 C08J5/00 C08J5/18 C08L1/00 C08L3/00 C08L5/00 C08L89/00 C08L97/00 E05D1/00 (Core/Invention);
B05B11/00 B05C1/08 B05C3/00 B05C5/02 B29C43/04 B29C49/04 B29C51/08 B32B37/12 (Core/Non-invention)

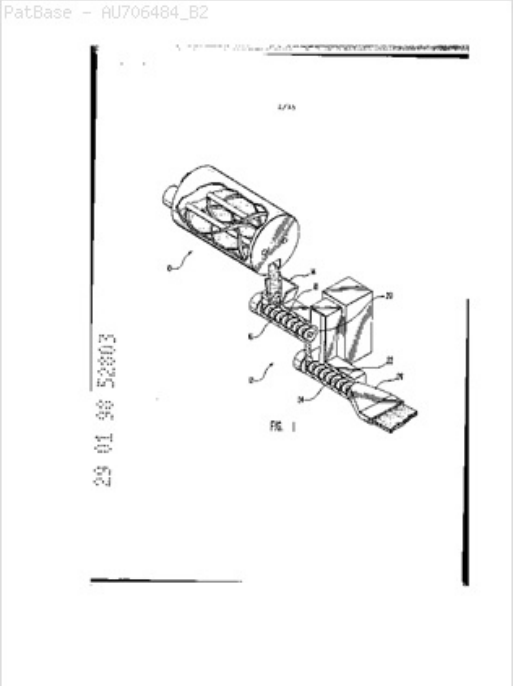

International (IPC 1-7)**:** B28B21/00 B28B3/22 B28C5/14 B29C65/00 B32B13/00

CPC: C04B41/61 B28B1/00 B28B1/52 B28B3/00 B28B3/02 B28B3/126 B28B3/20 B28B3/2645 B28B7/42 B28B11/00 B28B11/003 B28B11/008 B28B13/021 B28B13/06 B28B23/00 B28B23/0081 B28B23/0087 B28C7/02 B29C43/00 B29C43/003 B29C45/0013 B29C49/0005 B29C49/0047 B29C49/04 B29C49/06 B29C49/063 B29C51/002 B29C51/04 B29C51/08 B29C51/082 B29C51/10 B29C53/063 B29C53/58 B29C55/18 B29C67/24 B29C67/242 B29C67/243 B29C70/50 B29C71/0009 B29C2043/463 B29C2043/464 B29C2043/5841 B29C2791/006 B29C2795/007 B29K2001/00 B29K2003/00 B29K2005/00 B29K2089/00 B29K2105/12 B29K2105/16 B29L2024/00 B29L2031/608 B29L2031/712 B29L2031/7132 B31D1/005 B32B5/02 B32B9/00 B32B13/02 B32B27/04 B32B27/20 B32B37/12 B65D43/162 B65D65/38 B65D65/466 B65D2301/20 B65D2565/385 C04B16/02 C04B20/0048 C04B24/00 C04B26/00 C04B26/02 C04B26/026 C04B26/28 C04B26/285 C04B28/00 C04B38/0006 C04B38/02 C04B40/00 C04B40/0028 C04B41/009 C04B41/45 C04B2111/00017 C04B2111/00129 C04B2111/00612 C04B2111/00948 C04B2111/34 C08J5/18 C08J2323/02 C08L1/28 C08L1/286 C08L3/00 C08L3/02 C08L5/02 C08L5/12 C08L5/14 C08L89/06 C08L97/02 E05D1/02 E05Y2900/602 B29C44/3402 B29C2049/4608 B31B50/32 B31B2105/00 B31B2105/0022 B31B2110/10 B31B2110/20 B29C48/001 B29C48/0011 B29C48/0017 B29C48/07 B29C48/08 B29C48/09 B29C48/13

European: B28B1/00 B28B1/52 B28B11/00 B28B11/00E B28B11/00E3 B28B13/02C B28B13/06 B28B23/00 B28B23/00Z B28B23/00Z1 B28B3/00 B28B3/02 B28B3/12C B28B3/20 B28B3/26E B28B7/42 B28C7/02 B29C43/00B B29C45/00E B29C49/00B B29C49/06B2B B29C51/00B B29C51/04 B29C51/10 B29C53/06B B29C55/18 B29C67/22D1 B29C67/24 B29C67/24C B29C67/24C2 B29C70/50 B29C71/00C B31B1/32 B31B17/00 B31D1/00H1 B32B13/02 B32B27/04 B32B27/20 B32B5/02 B32B9/00 B65D43/16B B65D65/38 B65D65/46C C04B16/02 C04B20/00F C04B24/00 C04B26/00 C04B26/02 C04B26/02B C04B26/28 C04B26/28B C04B28/00 C04B38/00B C04B38/02 C04B40/00 C04B40/00D C04B41/00V C04B41/45 C04B41/61 C08J5/18 C08L1/28 C08L1/28F C08L3/00 C08L3/02 C08L5/02 C08L5/12 C08L5/14 C08L89/06 C08L97/02 E05D1/02 L29C43/00 L29C43/46A2 L29C43/46A3 L29C43/58D1 L29C47/00J4 L29C47/00J5 L29C47/00J6 L29C47/00L L29C47/00L4 L29C47/00L7 L29C49/00F L29C49/04 L29C49/06 L29C49/46B1A L29C51/04 L29C51/08 L29C51/08B L29C51/10 L29C53/58 L29C791/00E4 L29C795/00D L29K1/00 L29K105/12 L29K105/16 L29K3/00 L29K5/00 L29K89/00 L29L24/00 L29L31/60C L29L31/712 L29L31/7132 L31B201/26A1A L31B217/08A L32B37/12 L65D301/20 L65D565/38Y7 M04B111/00E M04B111/00M14 M04B111/00T6 M04B111/00T66 M04B111/34 M08J323/02 P05D1/02 P05Y900/602

Family:

Publication number	Publication date	Application number	Application date
AU199463544 A1	19940914	AU19940063544	19940217
AU706484 B2	19990617	AU19980052803	19980129

Priority:

US19930019151 19930217 US19930095662 19930721 US19930101500 19930803
US19930152354 19931119 AU19940063544 19940217 WO1994US02111 19940217

Probable Assignee: KHASHOGGI E IND

Assignee(s): (std)**:** KHASHOGGI E IND

Assignee(s): E KHASHOGGI IND ; E KHASHOGGI IND LLC ; E KHASHOGGI INDUSTRIES ; E KHASHOGGI INDUSTRIES LLC

Inventor(s): (std)**:** ANDERSEN PER JUST ; HODSON SIMON K

Inventor(s): PER JUST ANDERSEN ; SIMON K HODSON

Agent(s): DAVIES COLLISON CAVE; DAVIES COLLISON CAVE PTY LTD

11) Family number: 33376308 (WO9412328A1)

© PatBase

Title: HIGHLY INORGANICALLY FILLED COMPOSITIONS

Abstract: Compositions, methods, and apparatus for manufacturing sheets having a highly inorganically filled matrix prepared by mixing together an organic polymer binder, water, one or more inorganic aggregate materials, fibers, and optional admixtures in the correct proportions in order to form a sheet which has the desired performance criteria. The inorganically filled mixtures are formed into sheets by first extruding the mixtures (40) and then passing the extruded materials between a set of rollers (50). The rolled sheets are dried in an accelerated manner to form a substantially hardened sheet, such as by heated rollers and/or a drying chamber. The inorganically filled sheets may have properties substantially similar to sheets presently made form traditional materials like paper, paperboard, polystyrene, plastic or metal. Such sheets can be rolled, pressed, scored, perforated, folded, and glued. They have particular utility in the mass production of articles, such as food and beverage containers, and packaging materials.

Classifications:

International (IPC 8-9)**:** B05B11/00 B28B1/00 B28B1/52 B28B11/00 B28B21/00 B28B21/72 B28B23/00 B28B3/12 B28B3/20 B28C5/40 B29C43/00 B29C43/02 B29C43/22 B29C43/24 B29C43/34 B29C43/36 B29C43/46 B29C49/00 B29C51/00 B29C53/06 B29C55/18 B29C67/24 B29C70/50 B29C71/00 B31B17/00 B32B1/02 B32B1/08 B32B13/00 B32B13/02 B32B27/04 B32B27/20 B32B5/02 B32B9/00 B65D43/16 B65D65/38 B65D65/46 C04B14/02 C04B14/06 C04B16/02 C04B20/00 C04B22/04 C04B24/14 C04B24/24 C04B24/38 C04B26/00 C04B26/02

C04B26/28 C04B28/00 C04B28/02 C04B40/00 C08J5/18 C08K13/02 C08L1/00 C08L1/28 C08L101/00 C08L29/02 C08L29/04 C08L3/00 C08L3/02 C08L33/02 C08L33/24 C08L39/00 C08L39/06 C08L5/02 C08L5/12 C08L5/14 C08L71/00 C08L71/02 C08L75/00 C08L89/06 C08L91/08 C08L97/02 C09D133/04 C09D133/06 C09D161/20 C09D161/28 C09D167/00 C09D167/04 C09D171/00 C09D171/02 D21F11/00 E05D1/02 (Advanced/Invention);
B05C5/02 B29C43/08 B29C53/58 B32B37/12 (Advanced/Non-invention); B05B11/00 B28B1/00 B28B1/52 B28B11/00 B28B21/00 B28B23/00 B28B3/00 B28B3/20 B29C43/00 B29C43/02 B29C43/22 B29C43/24 B29C43/34 B29C43/36 B29C43/44 B29C49/00 B29C51/00 B29C53/00 B29C55/18 B29C67/24 B29C70/04 B29C71/00 B31B17/00 B32B1/00 B32B13/00 B32B27/04 B32B27/20 B32B5/02 B32B9/00 B65D43/16 B65D65/38 B65D65/46 C04B14/02 C04B16/00 C04B20/00 C04B22/00 C04B24/00 C04B26/00 C04B28/00 C04B40/00 C08J5/18 C08L1/00 C08L101/00 C08L29/00 C08L3/00 C08L33/00 C08L39/00 C08L5/00 C08L71/00 C08L75/00 C08L89/00 C08L91/00 C08L97/00 C09D133/04 C09D133/06 C09D161/20 C09D167/00 C09D167/04 C09D171/00 D21F11/00 E05D1/00 (Core/Invention);
B05C5/02 B29C43/04 B32B37/12 (Core/Non-invention)
International (IPC 1-7): B28B21/00 B28B21/72 B28C5/40 B31F5/00 B32B1/08 B32B13/00 B32B13/02 B32B3/06 B32B5/12 B65D3/00 B65D37/00 B65D85/72 C04B14/02 C04B24/24 C08J5/18 C08K13/02 C09K3/00
CPC: Y02W30/97 B05B11/0037 B28B1/00 B28B1/52 B28B3/126 B28B3/20 B28B11/00 B28B11/003 B28B11/008 B28B23/00 B28B23/0081 B28B23/0087 B29C43/00 B29C43/003 B29C43/08 B29C43/222 B29C43/24 B29C43/34 B29C43/46 B29C49/0005 B29C51/002 B29C53/063 B29C53/58 B29C55/18 B29C67/24 B29C67/242 B29C70/50 B29C71/0009 B29C2043/022 B29C2043/023 B29C2043/3433 B29C2043/3689 B29C2043/463 B29C2043/464 B29C2043/465 B29C2043/466 B29C2795/007 B29K2001/00 B29K2003/00 B29K2005/00 B29K2089/00 B29K2105/04 B29K2105/12 B29K2105/16 B29L2024/00 B29L2031/608 B29L2031/712 B29L2031/7132 B31D1/005 B32B5/02 B32B9/00 B32B27/04 B32B37/12 B65D43/162 B65D65/38 B65D65/466 B65D2565/385 C04B14/064 C04B16/02 C04B20/002 C04B22/04 C04B24/14 C04B24/38 C04B26/00 C04B26/02 C04B26/026 C04B26/28 C04B26/285 C04B28/00 C04B28/02 C04B40/00 C04B40/0092 C04B2111/00129 C04B2111/00612 C04B2111/00948 C04B2111/50 C08J5/18 C08J2323/02 C08L1/28 C08L1/286 C08L3/00 C08L3/02 C08L5/02 C08L5/12 C08L5/14 C08L89/06 C08L97/02 E05Y2900/602 B31B50/32 B31B2105/0022 B32B1/02 B32B1/08 B32B5/18 B32B13/04 B32B13/06 B32B13/12 B32B13/14 B32B27/34 B32B2266/0228 B32B2439/00 B32B2597/00 B32B27/20 E05D1/02 B29C48/001 B29C48/0011 B29C48/0012 B29C48/0017 B29C48/0019 B29C48/0022 B29C48/07 B29C48/08 B29C48/09 B29C48/13 B05B1/34 B32B13/02
European: B05B11/00B5 B28B1/00 B28B1/52 B28B11/00 B28B11/00E B28B11/00E3 B28B23/00 B28B23/00Z B28B23/00Z1 B28B3/12C B28B3/20 B29C43/00B B29C43/22B B29C43/24 B29C43/34 B29C43/46 B29C47/00J5 B29C49/00B B29C51/00B B29C53/06B B29C55/18 B29C67/24 B29C67/24C B29C70/50 B29C71/00C B31B1/32 B31B17/00 B31D1/00H1 B32B13/02 B32B27/04 B32B27/20 B32B5/02 B32B9/00 B65D43/16B B65D65/38 B65D65/46C C04B14/06G C04B16/02 C04B20/00D2 C04B22/04 C04B24/14 C04B24/38 C04B26/00 C04B26/02 C04B26/02B C04B26/28 C04B26/28B C04B28/00 C04B28/02 C04B40/00 C04B40/00W C08J5/18 C08L1/28 C08L1/28F C08L3/00 C08L3/02 C08L5/02 C08L5/12 C08L5/14 C08L89/06 C08L97/02 E05D1/02 L29C43/00 L29C43/02B1 L29C43/02B2 L29C43/08 L29C43/34B L29C43/36H2 L29C43/46 L29C43/46A2 L29C43/46A3 L29C43/46A4 L29C43/46B L29C47/00J4 L29C47/00J5 L29C47/00J6 L29C47/00L L29C47/00L12 L29C47/00L4 L29C47/00L5 L29C47/00L7 L29C47/00L9 L29C53/58 L29C795/00D L29K1/00 L29K105/04 L29K105/12 L29K105/16 L29K3/00 L29K5/00 L29K89/00 L29L24/00 L29L31/60C L29L31/712 L29L31/7132 L31B201/26A1A L31B217/08A L32B31/00A8B L32B37/12 L65D565/38Y7 M04B111/00M14 M04B111/00T6 M04B111/00T66 M04B111/50 M08J323/02 P05D1/02 P05Y900/602

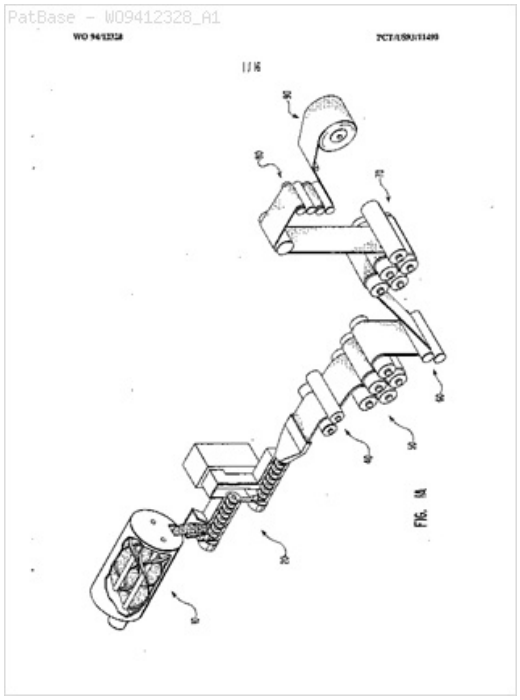

Family:

Publication number	Publication date	Application number	Application date
AU7194196 A1	19970306	AU19960071941	19961125
CA2143004 AA	19950221	CA19932143004	19931124
CN1062004 C	20010214	CN19931020375	19931125
CN1126233 A	19960710	CN19931020375	19931125
NZ259123 A	19970224	NZ19930259123	19931124
WO9412328 A1	19940609	WO1993US11490	19931124

Priority:

US19920982383 19921125 US19930152354 19931119 US19930154436 19931119 WO1993US11490 19931124

Probable Assignee: KHASHOGGI E IND

Assignee(s): (std): CONCRETE TECHNOLOGY CORP ; KHASHOGGI E IND

Assignee(s): HODSON SIMON K ; ANDERSEN PER JUST ; E KHASHOGGI HOLDINGS LP ; E KHASHOGGI IND ; E KHASHOGGI IND LLC ; E KHASOGGI IND

Inventor(s): (std): ANDERSEN PER JUST ; HODSON SIMON K

Inventor(s): ANDERSEN PER J ; P J ANDERSON ; S K HODSON ; PER JUST ANDERSON ; SK HODSON ; PJ ANDERSON ; PER JUST ANDERSEN ; SIMON K HODSON

Designated states: AT AU BB BE BF BG BJ BR BY CA CF CG CH CI CM CZ DE DK ES FI FR GA GB GN GR HU IE IT JP KP KR KZ LK LU MC MG ML MN MR MW NE NL NO NZ PL PT RO RU SD SE SK SN TD TG UA VN

12) Family number: 32590310 (ZW2894A)

© PatBase

Title: METHODS AND SYSTEMS FOR MANUFACTURING PACKAGING MATERIALS, CONTAINERS, AND OTHER ARTICLES OF MANUFACTURE FROM HYDRAULICALLY SETTABLE MIXTURES AND HIGHLY INORGANICALLY FILLED COMPOSITIONS

Abstract: Compositions, methods and systems for manufacturing arcticles, including containers and packaging materials, from hydraulically settable and inorganically filled materials are disclosed. Suitable compositions are prepared by mixing together a hydraulically settable binder or organic binder, water, and appropriate additives, such as aggregates, fibers, and rheology-modifying agents, which impart predetermined properties so that an article formed therefrom has the desired performance

criteria. The desired article can be molded from the mixture using a variety of moding processes including: die pressing, injection modling, blow molding, jiggering, wet sheet molding, and dry sheet molding. The sheet forming processes require the mixture to first be fashioned into a sheet, such as by the use of an extruder (12) or rollers, after which the sheet is formed, it is hardened. Printed indicya and a coating can then the applied.

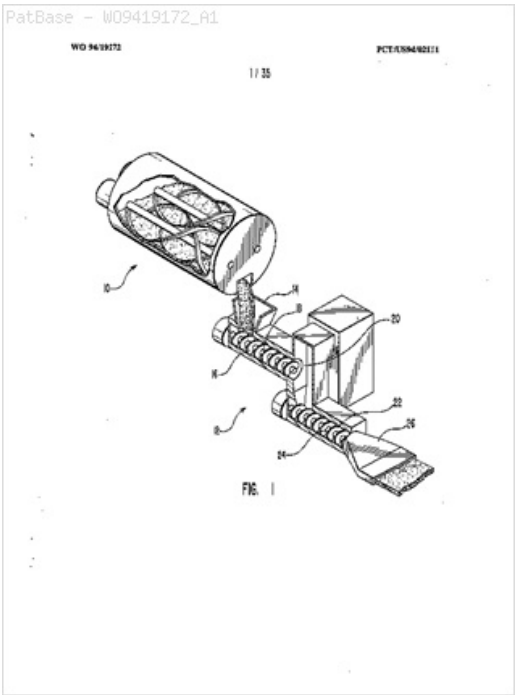

Classifications:

International (IPC 8-9): A47G19/00 B01F3/12 B05B11/00 B05C1/08 B05C3/18 B05C5/02 B28B1/00 B28B1/52 B28B11/00 B28B13/02 B28B13/06 B28B21/70 B28B23/00 B28B3/00 B28B3/02 B28B3/12 B28B3/20 B28B3/22 B28B3/26 B28B7/42 B28C5/14 B28C7/02 B29C43/00 B29C43/02 B29C43/08 B29C43/22 B29C43/24 B29C43/34 B29C43/36 B29C43/38 B29C43/46 B29C45/00 B29C49/00 B29C49/04 B29C49/06 B29C51/00 B29C51/04 B29C51/08 B29C51/10 B29C53/06 B29C53/58 B29C55/18 B29C65/00 B29C67/24 B29C70/50 B29C71/00 B31B17/00 B32B13/02 B32B27/04 B32B27/20 B32B37/12 B32B37/14 B32B5/02 B32B9/00 B65D1/00 B65D1/10 B65D1/12 B65D43/16 B65D5/00 B65D65/38 B65D65/46 C04B14/00 C04B14/02 C04B14/06 C04B16/02 C04B20/00 C04B22/04 C04B24/00 C04B24/14 C04B24/38 C04B26/00 C04B26/02 C04B26/28 C04B28/00 C04B28/02 C04B38/00 C04B38/02 C04B40/00 C04B41/45 C04B41/61 C04B41/62 C04B41/65 C08J5/00 C08J5/18 C08L1/28 C08L3/00 C08L3/02 C08L5/02 C08L5/12 C08L5/14 C08L89/06 C08L97/02 E05D1/02 (Advanced/Invention);
A47G19/00 B05B11/00 B05C1/08 B05C3/18 B05C5/02 B29C43/08 B29C49/04 B29C51/08 B29C53/58 B29C65/00 B32B37/12 B65D1/00 C04B14/00 C04B14/02 C08J5/00 (Advanced/Non-invention);
B28B1/00 B28B1/52 B28B11/00 B28B13/00 B28B23/00 B28B3/00 B28B3/02 B28B3/20 B28B3/26 B28B7/40 B28C7/00 B29C43/00 B29C43/02 B29C43/22 B29C43/24 B29C43/34 B29C43/36 B29C43/44 B29C45/00 B29C49/00 B29C49/06 B29C51/00 B29C51/10 B29C53/00 B29C55/18 B29C65/00 B29C67/24 B29C70/04 B29C71/00 B31B17/00 B32B13/00 B32B27/04 B32B27/20 B32B5/02 B32B9/00 B65D43/16 B65D65/38 B65D65/46 C04B16/00 C04B20/00 C04B24/00 C04B26/00 C04B28/00 C04B38/00 C04B38/02 C04B40/00 C04B41/45 C04B41/60 C08J5/00 C08J5/18 C08L1/00 C08L3/00 C08L5/00 C08L89/00 C08L97/00 E05D1/00 (Core/Invention);
B05B11/00 B05C1/08 B05C3/00 B05C5/02 B29C43/04 B29C49/04 B29C51/08 B32B37/12 (Core/Non-invention)

International (IPC 1-7): B28B1/08 B28B21/00 B28B3/22 B28C5/14 B29C65/00 B29D22/00 B32B13/00 B65D13/02 B65D65/46 C04B14/00 C04B38/00

CPC: Y10S106/02 Y10S428/906 B01F3/1214 B01F2003/125 B05C1/0826 B05C1/0834 B05C3/18 B05C5/0245 B28B11/001 B29C43/02 B29C43/22 B29C43/222 B29C43/24 B29C43/34 B29C43/36 B29C43/38 B29C2043/3433 B29C2043/3615 B29C2043/3621 B29C2043/3623 B29C2043/3689 B29C2043/465 B29C2043/466 B29K2105/04 B29K2403/00 B29K2405/00 B32B37/00 B32B37/144 B65D5/00 B65D11/02 C04B28/02 C04B2111/00965 Y10T428/131 Y10T428/1314 Y10T428/1321 Y10T428/1341 Y10T428/1372 Y10T428/1376 Y10T428/1379 Y10T428/24446 Y10T428/2457 Y10T428/24694 Y10T428/249932 Y10T428/249968 Y10T428/249974 Y10T428/249986 Y10T428/249987 Y10T428/249991 Y02W30/97 B28B1/00 B28B1/52 B28B3/00 B28B3/02 B28B3/126 B28B3/20 B28B3/2645 B28B7/42 B28B11/00 B28B11/003 B28B11/008 B28B13/021 B28B13/06 B28B23/00 B28B23/0081 B28B23/0087 B28C7/02 B29C43/00 B29C43/003 B29C45/0013 B29C49/0005 B29C49/0047 B29C49/04 B29C49/06 B29C49/063 B29C51/002 B29C51/04 B29C51/08 B29C51/082 B29C51/10 B29C53/063 B29C53/58 B29C55/18 B29C67/24 B29C67/242 B29C67/243 B29C70/50 B29C71/0009 B29C2043/463 B29C2043/464 B29C2043/5841 B29C2791/006 B29C2795/007 B29K2001/00 B29K2003/00 B29K2005/00 B29K2089/00 B29K2105/12 B29K2105/16 B29L2024/00 B29L2031/608 B29L2031/712 B29L2031/7132 B31D1/005 B32B9/00 B32B27/04 B32B27/20 B32B37/12 B65D43/162 B65D65/38 B65D65/466 B65D2301/20 B65D2565/385 C04B16/02 C04B20/0048 C04B24/00 C04B26/00 C04B26/02 C04B26/026 C04B26/28 C04B26/285 C04B28/00 C04B38/0006 C04B38/02 C04B40/00 C04B40/0028 C04B41/009 C04B41/45 C04B2111/00017 C04B2111/00129 C04B2111/00612 C04B2111/00948 C04B2111/34 C08J5/18 C08J2323/02 C08L1/28 C08L1/286 C08L3/00 C08L3/02 C08L5/02 C08L5/12 C08L5/14 C08L89/06 C08L97/02 E05D1/02 E05Y2900/602 B29C44/3402 B29C2049/4608 B31B50/32 B31B2105/00 B31B2105/0022 B31B2110/10 B31B2110/20 B32B13/02 B32B1/02 B32B5/02 B32B2262/062 B32B2262/065 B32B2262/101 B32B2262/103 B32B2262/105 B32B2439/70 C04B41/61 B29C48/001 B29C48/0011 B29C48/0017 B29C48/07 B29C48/08 B29C48/09 B29C48/13 B29C48/0012 B29C48/0019 B29C48/0022 B29C48/12

European: B01F3/12B2 B28B1/00 B28B1/52 B28B11/00 B28B11/00B B28B11/00E B28B11/00E3 B28B13/02C B28B13/06 B28B23/00 B28B23/00Z B28B23/00Z1 B28B3/00 B28B3/02 B28B3/12C B28B3/20 B28B3/26E B28B7/42 B28C7/02 B29C43/00B B29C43/02 B29C43/22 B29C43/22B B29C43/24 B29C43/34 B29C43/36 B29C43/38 B29C43/46 B29C45/00E B29C49/00B B29C49/06B2B B29C51/00B B29C51/04 B29C51/10 B29C53/06B B29C55/18 B29C67/22D1 B29C67/24 B29C67/24C B29C67/24C2 B29C70/50 B29C71/00C B31B1/32 B31B17/00 B31D1/00H1 B32B13/02 B32B27/04 B32B27/20 B32B37/00 B32B37/14B B32B5/02 B32B9/00 B65D11/02 B65D43/16B B65D5/00 B65D65/38 B65D65/46C C04B16/02 C04B20/00F C04B24/00 C04B26/00 C04B26/02 C04B26/02B C04B26/28 C04B26/28B C04B28/00 C04B28/02 C04B38/00B C04B38/02 C04B40/00 C04B40/00D C04B41/00V C04B41/45 C04B41/61 C08J5/18 C08L1/28 C08L1/28F C08L3/00 C08L3/02 C08L5/02 C08L5/12 C08L5/14 C08L89/06 C08L97/02 E05D1/02 L01F3/12G L05B11/00B5 L05C1/08P L05C1/08P2 L05C3/18 L05C5/02E L29C43/00 L29C43/34B L29C43/36C2 L29C43/36C2B L29C43/36C2B1 L29C43/36H2 L29C43/46A2 L29C43/46A3 L29C43/46A4 L29C43/46B L29C43/58D1 L29C47/00J10 L29C47/00J4 L29C47/00J5 L29C47/00J6 L29C47/00J9 L29C47/00L L29C47/00L12 L29C47/00L4 L29C47/00L5 L29C47/00L7 L29C47/00L9 L29C49/00F L29C49/04 L29C49/06 L29C49/46B1A L29C51/04 L29C51/08 L29C51/08B L29C51/10 L29C53/58 L29C791/00E4 L29C795/00D L29K1/00 L29K105/04 L29K105/12 L29K105/16 L29K3/00 L29K403/00 L29K405/00 L29K5/00 L29K89/00 L29L24/00 L29L31/60C L29L31/712 L29L31/7132 L31B201/26A1A L31B217/08A L32B31/00A8B L32B37/12 L65D301/20 L65D565/38Y7 M04B111/00E M04B111/00M14 M04B111/00T6 M04B111/00T66 M04B111/00T70 M04B111/34 M08J323/02 P05D1/02 P05Y900/602

Family:

Publication number	Publication date	Application number	Application date
AU199349958 A1	19940315	AU19930049958	19930730
AU199852803 A1	19980402	AU19980052803	19980129
CN1099711 A	19950308	CN19941003235	19940217
CN1173861 C	20041103	CN19991023259	19991026
CN1230362 C	20051207	CN20021026156	19940217
CN1250736 A	20000419	CN19991023259	19991026
CN1403349 A	20030319	CN20021026156	19940217
IL108671 A0	19940530	IL19940108671	19940216
IL108671 A1	19980816	IL19940108671	19940216
WO9419172 A1	19940901	WO1994US02111	19940217
ZW2894 A	19940504	ZW19940000028	19940216

Priority:

US19920929898 19920811 US19930019151 19930217 US19930095662 19930721

WO1993US07220 19930730 US19930101500 19930803 US19930152354 19931119
AU19940063544 19940217

Probable Assignee: KHASHOGGI E IND

Assignee(s): (std): ANDERSEN PER JUST ; CASSIUKIE IND INC E ; CASSIUKIE INDUSTRY INC E ; KHASHOGGI E IND ; KARXIUG IND CO LTD E ; HODSON SIMON K

Assignee(s): E KHASHOGGI INDUSTRIES ; E KHASOGGI INDUSTRIES ; E KHASHOGGI INDUSTRIES LLC ; E KHASHOGGI IND ; E KHASHOGGI IND LLC ; E KHASOGGI IND ; E CASSIUKIE IND INC ; E CASSIUKIE INDUSTRY INC ; E KARXIUG INDUSTRIAL CO ; E KARXIUG INDUSTRIAL CO LTD

Inventor(s): (std): ANDERSEN PER JUST ; HODSON SIMON K ; HOLDLIN P J ANDERSON S K ; HODLIN P J ANDERSON S K

Inventor(s): P J ANDERSON S K HODLIN ; PJ ANDERSON ; SK HODLIN ; PJ ANDERSON SK HODLIN ; ANDERSEN PER JUST DR ; HODSON SIMON KNIGHT ; S K HODLIN ; PER JUST ANDERSEN ; SIMON K HODSON ; PER JUST ANDERSON ; P J ANDERSON S K HOLDLIN ; P J ANDERSON ; S K HOLDLIN

Agent(s): DAVIES COLLISON CAVE; DAVIES COLLISON CAVE PTY LTD; REINHOLD COHN AND PARTNERS

Designated states: AT AU BB BE BF BG BJ BR BY CA CF CG CH CI CM CZ DE DK ES FI FR GA GB GN GR HU IE IT JP KP KR KZ LK LU MC MG ML MN MR MW NE NL NO NZ PL PT RO RU SD SE SK SN TD TG UA US VN

13) Family number: 31395321 (US2003134433A) © PatBase

Title: ELECTRONIC SENSING OF CHEMICAL AND BIOLOGICAL AGENTS USING FUNCTIONALIZED NANOSTRUCTURES

Abstract: This invention provides for an apparatus and a method for detecting the presence of pathogenic agents with sensors containing functionalized nanostructures integrated into circuits on silicon chips. The nanostructures are functionalized with molecular transducers that recognize and bind targeted analytes which are diagnostic of the pathogenic agent of interest. The molecular transducer includes a receptor portion, which binds the analyte, and an anchor portion that attaches to the nanostructure. Upon binding of the analyte, a change in molecular configuration represented by the newly formed receptor-analyte complex creates a force that is transmitted to the nanostructure via the anchor portion of the transducer. The effect of the force transmitted to the nanostructure is to alter its conductivity. The change in conductivity of the nanotube thus represents a signal that indicates the presence of the pathogenic agent of interest.

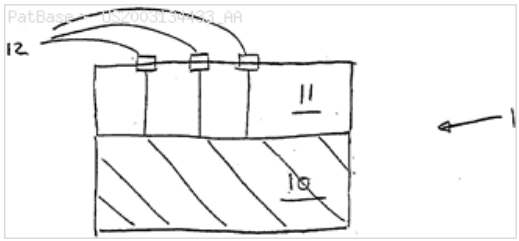

Classifications:

International (IPC 8-9): A61B5/05 A61B5/08 A61B5/083 A61B5/145 A61K31/202 A61K31/395 A61N1/36 B01D53/94 B01J19/00 B01J23/42 B01J23/44 B01J23/46 B01J35/06 B01J8/06 B05D5/12 B82B1/00 B82B3/00 B82Y10/00 B82Y15/00 B82Y30/00 C01B31/02 C12M1/00 C12M1/34 C12M3/00 C12N11/14 C12N11/16 C12Q1/00 C12Q1/68 C30B25/00 C40B60/12 D01F9/12 F02M25/06 G01N1/00 G01N1/28 G01N21/00 G01N21/75 G01N27/00 G01N27/02 G01N27/12 G01N27/22 G01N27/26 G01N27/28 G01N27/30 G01N27/327 G01N27/40 G01N27/403 G01N27/411 G01N27/414 G01N27/416 G01N31/12 G01N31/22 G01N33/00 G01N33/483 G01N33/497 G01N33/53 G01N33/543 G01N33/551 G01N33/566 G01N33/58 G01N33/66 G01N37/00 G01N7/00 G01R27/08 G05D23/00 G06F19/00 G08B21/00 H01B1/24 H01J1/02 H01J1/62 H01J63/04 H01L21/288 H01L23/48 H01L27/108 H01L27/14 H01L29/00 H01L29/06 H01L29/66 H01L29/768 H01L29/82 H01L51/00 H01L51/30 H05K13/00 (Advanced/Invention); A61B5/05 A61B5/08 A61B5/1486 B82B1/00 B82Y15/00 B82Y40/00 B82Y5/00 B82Y99/00 C12M1/00 C12N15/09 C12Q1/68 G01N15/06 G01N27/00 G01N27/12 G01N27/403 G01N27/416 G01N30/96 G01N33/00 H01L51/00 H01L51/05 (Advanced/Non-invention);
A61B5/05 A61B5/08 A61K31/185 A61K31/395 A61N1/36 B01J19/00 B01J8/02 B82B3/00 C01B31/00 C12M1/00 C12M1/34 C12M3/00 C12N11/00 C12Q1/68 C30B25/00 F02M25/06 G01N1/00 G01N21/00 G01N27/00 G01N27/02 G01N27/12 G01N27/22 G01N27/26 G01N27/28 G01N27/30 G01N27/327 G01N27/40 G01N27/403 G01N27/406 G01N27/416 G01N31/22 G01N33/00 G01N33/483 G01N33/53 G01N33/543 G01N33/551 G01N33/566 G01N33/58 G01N37/00 G01N7/00 G01R27/08 G05D23/00 G06F19/00 H01B1/24 H01J1/00 H01J63/00 H01L23/48 H01L27/108 H01L29/00 H01L29/02 H01L29/66 H01L51/00 (Core/Invention); A61B5/05 A61B5/08 B82B1/00 C12M1/00 C12N15/09 C12Q1/68 G01N15/06 G01N27/00 G01N27/416 G01N30/00 G01N33/00 H01L51/00 H01L51/05 (Core/Non-invention)

International (IPC 1-7): A61B5/08 B82B3/00 C12M1/34 C12Q1/68 G01N1/00 G01N21/00 G01N27/12 G01N31/22 G01N33/00 G01N33/543 H01J1/62 H01J63/04 H01L21/00 H01L27/14 H01L29/06 H01L29/82 H01L29/84 H02H1/00

CPC: A61B5/0833 A61B5/4821 A61B5/6819 A61B2562/0285 H01L51/0048 H01L51/0052 H01L51/0512 A61B5/681 A61B5/073 B82Y20/00 G01N25/20 G01K5/486 G01K2211/00 B01L3/50857 B01L2300/0636 B01L2300/0663 B01L2300/0819 B01L2300/0851 B01L2300/0893 B01L2300/0896 B01L2300/16 H01B1/24 H01L51/0097 H01L51/0595 Y10S977/957 Y10S977/72 Y10S977/734 G01N27/129 A61B2562/04 G01N1/28 G01N33/0013 B01L3/5027 A61B5/08 G01N33/005 H01L2924/0002 G01N27/3272 G01N33/0037 G01N33/551 G01N33/566 G01N33/582 Y10T29/49002 G01N33/004 H01L29/0665 H01L29/0673 Y10S977/742 G01N27/127 G01N33/5438 A61B5/082 Y10T436/204998 G01N33/0062 G01N2033/0068 G01N33/0054 H01L29/0669 G01N27/026 G01N27/3277 G01N27/3275 G01N27/3271 G01N27/3278 G01N33/497 A61B5/0836 A61B5/097 B82Y30/00 G01N27/4141 C12Q1/6825 B01L3/502761 B01L3/5029 B01L2200/027 B01L2200/10 B01L2300/0645 C12Q1/682 C12Q1/6823 A61B5/14532 A61B5/14535 A61B5/1486 A61B5/14865 B82Y10/00 B82Y15/00 C12Q1/006 G01N27/4145 G01N27/4146 H01L51/0049 H01L51/0093 H01L51/0545 Y10S977/723 Y02A50/245 C25D3/12 C25D3/46 C25D3/48 C25D3/50 C25D5/02 C25D5/10 C25D5/54 C25D17/005 C25D21/12

European: A61B5/07B A61B5/083B A61B5/083D A61B5/097 A61B5/145G A61B5/1486B A61B5/48D A61B5/68B1H A61B5/68B2B4 B01L3/00C2D8 B01L3/50857 B82Y10/00 B82Y15/00 B82Y20/00 B82Y30/00 C12Q1/00B6B C12Q1/68B2D C12Q1/68B2F C12Q1/68B2H G01K5/48M G01N25/20 G01N27/12E3 G01N27/12G G01N27/30H G01N27/327B G01N27/414 G01N27/414D G01N33/00D2 G01N33/00D2A1 G01N33/00D2D4C G01N33/00D2D4H G01N33/497 G01N33/543K2B G01N33/551 G01N33/566 G01N33/58D H01B1/24 H01L29/06C6 H01L29/06C6W2 H01L51/05D10 K61B5/08 K61B5/145H K61B5/1486 K61B562/02P K61B562/04 L01L200/02D2 L01L200/10 L01L3/5027 L01L3/5027H L01L3/5029 L01L300/06B2 L01L300/06B4 L01L300/06B8 L01L300/08B6 L01L300/08D2 L01L300/08H L01L300/08J L01L300/16 S01K211/00 S01N27/414B S01N27/414C S01N27/48 S01N33/00D2D4C S01N33/00D2D4H S01N33/497 T01L51/00M14 T01L51/00M4D T01L51/00M4D2 T01L51/00M6D T01L51/00S2 T01L51/05B2B T01L51/05B2B6 T01L51/30F4

US: 1/1 204/400 204/403.01 204/403.06 204/403.1 204/403.14 204/403.140P 204/403.15 204/406 204/409 204/415 204/431 205/123 205/123S 205/775 205/777.5 205/778 205/781 205/782 205/782.5 205/783 205/785.5 205/786 205/787 205/792 205/794.5 257/226 257/253 257/253P 257/414 257/414P 257/53 257/9 257/9P 257/9S 257/E21.174 257/E21.174S 257/E29.168 257/E29.168S 257/E31.119 257/E33.06 257/E51.04 29/592.1 29/592.100P 313/309 313/310 313/495 313/495P 324/663 324/663P 324/692 324/71.1 324/71.100P 340/539.26 340/540 340/603 340/628 340/632 361/226 361/226P 374/E5.032 374/E50.32S 422/109 422/109S 422/129 422/129S 422/198 422/198S 422/211 422/211S 422/400 422/400P 422/400S 422/57 422/57P 422/57S 422/58 422/58P 422/68.1 422/68.100S 422/82.01 422/82.02 422/82.020S 422/83 422/83P 422/83S 422/90 422/98 422/98S 427/122 427/122S 435/174 435/174S 435/176 435/176S 435/287.2 435/287.200P 435/287.200S 435/4 435/4S 435/6 435/6.11 435/6.110P 435/6.19 435/6.190P 435/6.190S 435/6P 435/7.1 436/133 436/133S 436/150 436/150P 436/151 436/151S 436/518 438/48 438/48P 506/39 506/39P 600/345 600/345S 600/347 600/347P 600/353 600/353S 600/354 600/354P 600/532 600/532P 600/532S 607/9 607/9S 702/22 702/22P 73/23.3 73/23.300S 73/31.05 73/31.050P 73/31.06 73/61.43 73/61.430P

977/712 977/712S 977/720 977/720S 977/723 977/734 977/742 977/742S 977/750 977/750S 977/752 977/752S 977/755 977/755S 977/762 977/762S 977/773 977/784 977/784S 977/890 977/890S 977/924 977/924S 977/932 977/932S 977/953 977/957 977/962 977/962S 977/DIG.1
JP F-Term: 2G056 2G060 2G060/AA06 2G060/AC10 2G060/AE40 2G060/AF03 2G060/AF20 2G060/DA17 2G060/DA27 2G060/FA05 2G060/HA02 2G060/HC10 2G060/HC18 2G060/HD03 2G060/HE03 2G060/JA06 2G060/KA05 3C082 2G060/AA02 2G060/AB09 2G060/AE19 2G060/AG06 2G060/AG11 2G060/AG15 2G060/BA07 2G060/DA11 3C083 4C038 4C038/SS09 4C038/ST09 4C038/SU19 4C038/SX01 4C038/SX11 2G060/AC02 2G060/AE17 2G060/AF06 2G060/AF07 2G060/AF08 2G060/AF10 2G060/AG10 2G060/DA16 2G060/HC08 2G060/HC13 2G060/HC19 2G060/HC21 2G060/HC22 2G060/HD01 2G060/KA06 4B024 4B024/AA11 4B024/CA01 4B024/CA09 4B024/HA11 4B029 4B029/AA07 4B029/BB20 4B029/FA15 4G146 4G146/AA12 4G146/AB06 4G146/AB07 4G146/AB10 4G146/AD21 4G146/AD28 4G146/AD31 4G146/AD40 2G045 2G058 2G045/DA12 2G045/DA13 2G045/DA14 4B063 4B063/QA01 4B063/QA18 4B063/QQ42 4B063/QR14 4B063/QR32 4B063/QR55 4B063/QR56 4B063/QS03 4B063/QS28 4B063/QS34 4B063/QS36 4B063/QS39 2G045/AA25 2G045/DB01 2G045/JA01 2G045/JA07 4C038/SV03 4D048 4D048/AA06 4D048/AB01 4D048/BA06 4D048/BA30 4D048/BA31 4D048/BA33 4D048/BA41 4D048/BB08 4D048/CA07 4D048/CC31 4D048/CC59 4D148 4D148/AA06 4D148/AB01 4D148/BA06 4D148/BA30 4D148/BA31 4D148/BA33 4D148/BA41 4D148/BB08 4D148/CA07 4D148/CC31 4D148/CC59 4G169 4G169/AA03 4G169/AA11 4G169/BA02 4G169/BC71 4G169/BC72 4G169/BC75 4G169/CA02 4G169/CA03 4G169/CA07 4G169/CA13 4G169/DA06 4G169/EA03 4G169/FA02 2G045/FA34 2G060/AA07 2G060/AD06 2G060/AG08 2G060/DA01
JP F-Index: B82Y15/00 B82Y35/00 G01N27/00/J G01N27/30/B G01N27/30/F G01N27/30/301/K G01N27/30/301/U G01N27/30/301/V G01N27/30/301/W G01N27/30/301/Z G01N27/414/301/K G01N27/414/301/U G01N27/414/301/V G01N27/414/301/W G01N27/414/301/Z B82B1/00 B82Y30/00 G01N27/30/301/F G01N27/414/301/F G01N27/416/331 G01N27/46/331 A61B5/08 A61B5/08/100 A61B5/083 G01N27/30/301/D G01N27/30/301/G G01N27/414/301/D G01N27/414/301/G B82Y5/00 C01B31/02/101/F C01B32/152 C01B32/159 C01B32/168 C12M1/00/A C12N15/00/F C12N15/09/200 G01N27/02/D G01N27/22/ZNA/B G01N27/30/301/P G01N27/30/301/R G01N27/30/301/Y G01N27/414/301/P G01N27/414/301/R G01N27/414/301/Y G01N33/53/M G01N33/543/525/C G01N33/543/525/U G01N33/543/525/W G01N33/543/593 G01N33/551 G01N37/00/102 C12Q1/68/A C12Q1/682/C C12Q1/682/Z C12Q1/6823/C C12Q1/6823/Z C12Q1/6825/C C12Q1/6825/Z G01N33/58/A G01N33/497/A B01D53/36/102/A B01D53/36/102/G B01D53/86/222 B01J23/42/A B01J23/44/A B01J23/46/311/A B01J35/06/ZAB/K G01N27/22/B G01N27/30/301/X G01N27/414/301/X G01N33/483/E

Family:

Publication number	Publication date	Application number	Application date
AU2003291385 AA	20040603	AU20030291385	20031107
BRPI0417802 A	20070410	BR2004PI17802	20041220
EP1558933 A1	20050803	EP20030768779	20031107
EP1664724 A2	20060607	EP20040788761	20040913
EP1664724 A4	20070502	EP20040788761	20040913
EP1680353 A2	20060719	EP20040821666	20040917
EP1680353 A4	20120411	EP20040821666	20040917
EP1695072 A1	20060830	EP20040815114	20041220
EP1695072 A4	20110810	EP20040815114	20041220
EP1781771 A2	20070509	EP20050810377	20050824
EP1831670 A2	20070912	EP20050855662	20051223
EP1831670 A4	20100915	EP20050855662	20051223
EP1941270 A2	20080709	EP20060851621	20060718
EP1941270 A4	20110316	EP20060851621	20060718
EP2007379 A2	20081231	EP20070754869	20070403
EP2007379 A4	20091209	EP20070754869	20070403
EP2029013 A2	20090304	EP20070756204	20070504
EP2029013 A4	20110928	EP20070756204	20070504
EP2198146 A1	20100623	EP20080798291	20080820
JP2006505806 T2	20060216	JP20050507121T	20031107
JP2007505323 T2	20070308	JP20060526418T	20040913
JP2007515227 T2	20070614	JP20060545585T	20041220
JP2008511008 T2	20080410	JP20070530178T	20050824
JP2008525822 T2	20080717	JP20070549560T	20051223
JP2009532064 T2	20090910	JP20090504284T	20070403
JP2009537219 T2	20091029	JP20090510967T	20070504
JP2010537823 T2	20101209	JP20100524086T	20080820
JP2012247432 A2	20121213	JP20120175154	20120807
JP5611041 B2	20141022	JP20100524086T	20080820
JP5743974 B2	20150701	JP20120175154	20120807
US2003134433 AA	20030717	US20030345783	20030116
US2004043527 AA	20040304	US20020280265	20021026
US2004132070 AA	20040708	US20030704066	20031107
US2004253741 AA	20041216	US20040773631	20040206
US2005129573 AA	20050616	US20040940324	20040913
US2005157445 AA	20050721	US20040945803	20040920
US2005169798 AA	20050804	US20050090550	20050325
US2005184641 AA	20050825	US20040846072	20040514
US2005245836 AA	20051103	US20040019792	20041220
US2005279987 AA	20051222	US20030656898	20030905
US2006055392 AA	20060316	US20050111121	20050420
US2006228723 AA	20061012	US20050259414	20051025
US2006263255 AA	20061123	US20060354561	20060214
US2007045756 AA	20070301	US20060488465	20060718
US2007048180 AA	20070301	US20060437275	20060518
US2007048181 AA	20070301	US20060488456	20060718
US2007114573 AA	20070524	US20030655529	20030904
US2007132043 AA	20070614	US20060400038	20060406
US2007178477 AA	20070802	US20050212026	20050824
US2007208243 AA	20070906	US20050274747	20051115
US2007259359 AA	20071108	US20070695401	20070402

US2008021339 AA	20080124	US20060588845	20061026
US2008093226 AA	20080424	US20060636360	20061208
US2008185295 AA	20080807	US20070868373	20071005
US2008221806 AA	20080911	US20070924328	20071025
US2009056419 AA	20090305	US20080193353	20080818
US2009084678 AA	20090402	US20080146320	20080625
US2009101996 AA	20090423	US20080268327	20081110
US2009165533 AA	20090702	US20080245638	20081003
US2010047901 AA	20100225	US20090607912	20091028
US2010056892 AA	20100304	US20060390493	20060327
US2010085067 AA	20100408	US20090560316	20090915
US2010137731 AA	20100603	US20090485793	20090616
US2010231242 AA	20100916	US20090634525	20091209
US2010323925 AA	20101223	US20060541794	20061002
US2011154648 AA	20110630	US20110047593	20110314
US2012006102 AA	20120112	US20110084465	20110411
US2012018301 AA	20120126	US20110092869	20110422
US2012025165 AA	20120202	US20110096891	20110428
US2013075690 AA	20130328	US20120442720	20120409
US2013075794 AA	20130328	US20120442856	20120410
US2013287644 AA	20131031	US20130847353	20130319
US2013306491 AA	20131121	US20130867925	20130422
US2014353154 AA	20141204	US20140306160	20140616
US2015008486 AA	20150108	US20140306156	20140616
US2016123947 AA	20160505	US20150724675	20150528
US2016187276 AA	20160630	US20150961572	20151207
US6894359 BB	20050517	US20020280265	20021026
US7449757 BB	20081111	US20040945803	20040920
US7522040 BB	20090421	US20050111121	20050420
US7547931 BB	20090616	US20040019792	20041220
US7714398 BB	20100511	US20060390493	20060327
US7948041 BB	20110524	US20070924328	20071025
US7955559 BB	20110607	US20080146320	20080625
US7956525 BB	20110607	US20040846072	20040514
US8152991 BB	20120410	US20060636360	20061208
US8154093 BB	20120410	US20060400038	20060406
US8425745 BB	20130423	US20070868373	20071005
US8456074 BB	20130604	US20110096891	20110428
US8754454 BB	20140617	US20110084465	20110411
US8778269 BB	20140715	US20110092869	20110422
US9103775 BB	20150811	US20120442856	20120410
US9234867 BB	20160112	US20130867925	20130422
US9291613 BB	20160322	US20140306156	20140616
US9588077 BB	20170307	US20140306160	20140616
WO04044586 A1	20040527	WO2003US35635	20031107
WO04044586 C1	20050707	WO2003US35635	20031107
WO05026694 A2	20050324	WO2004US30136	20040913
WO05026694 A3	20060803	WO2004US30136	20040913
WO05062031 A1	20050707	WO2004US42998	20041220
WO05094221 A2	20051013	WO2004US30562	20040917
WO05094221 A3	20080103	WO2004US30562	20040917
WO06024023 A2	20060302	WO2005US30487	20050824
WO06024023 A3	20090604	WO2005US30487	20050824
WO06071895 A2	20060706	WO2005US47143	20051223
WO06071895 A3	20070208	WO2005US47143	20051223
WO07114931 A2	20071011	WO2007US08422	20070403
WO07114931 A3	20081224	WO2007US08422	20070403
WO07136523 A2	20071129	WO2007US10836	20070504
WO07136523 A3	20081002	WO2007US10836	20070504
WO08039165 A2	20080403	WO2006US28079	20060718
WO08039165 A3	20080807	WO2006US28079	20060718
WO08045799 A2	20080417	WO2007US80603	20071005
WO08045799 A3	20081113	WO2007US80603	20071005
WO08052104 A2	20080502	WO2007US82503	20071025
WO08052104 A3	20080821	WO2007US82503	20071025
WO09017911 A1	20090205	WO2008US68228	20080625
WO09032534 A1	20090312	WO2008US73746	20080820

Priority:

US20020349670P 20020116	US20020099664 20020315	US20020366566P 20020322
US20020177929 20020621	US20020408362P 20020904	US20020408412P 20020904
US20020408547P 20020905	US20020280265 20021026	US20020424892P 20021108
US20030345783 20030116	US20030445654P 20030206	US20030388701 20030314
US20030471243P 20030516	US20030655529 20030904	US20030656898 20030905
US20030502485P 20030912	US20030502485P 20030912	US20030504663P 20030918
US20030704066 20031107	WO2003US35635 20031107	US20030531079P 20031218
US20040773631 20040206	US20040546762P 20040223	US20040564248P 20040420
US20040846072 20040514	US20040576195P 20040602	US20040604293P 20040824

US20040940324	20040913	WO2004US30136	20040913	WO2004US30562	20040917
US20040945803	20040920	US20040622468P	20041025	US20040604293P	20041113
US20040629604P	20041119	US20040019792	20041220	WO2004US42998	20041220
US20040639954P	20041228	US20050652883P	20050215	US20050063504	20050223
US20050657275P	20050228	US20050660441P	20050310	US20050665153P	20050325
US20050090550	20050325	US20050668879P	20050405	US20050669126P	20050406
US20050111121	20050420	US20050683460P	20050519	US20050139184	20050527
US20050700953P	20050719	US20050700944P	20050720	US20050707863P	20050812
JP20070530178	20050824	US20050212026	20050824	WO2005US30487	20050824
US20050723530P	20051003	US20050259414	20051025	US20050730905P	20051027
US20050274747	20051115	US20050738694P	20051121	US20050748834P	20051209
US20050318354	20051223	WO2005US47143	20051223	US20060773138P	20060213
US20060354561	20060214	US20060390493	20060327	US20060789022P	20060404
US20060400038	20060406	US20060437275	20060518	US20060488456	20060718
WO2006US28079	20060718	US20060488465	20060718	US20060541794	20061002
US20060850217P	20061006	US20060588845	20061026	US20060274747	20061114
US20060636360	20061208	US20070703293	20070207	US20070901538P	20070214
US20070695401	20070402	WO2007US08422	20070403	US20070922642P	20070410
WO2007US10836	20070504	US20070937256P	20070626	US20070967552P	20070904
US20070868373	20071005	US20070924328	20071025	US20080146320	20080625
US20080193353	20080818	WO2008US73746	20080820	US20080245638	20081003
US20080268327	20081110	US20090485793	20090616	US20090560316	20090915
US20090607912	20091028	US20090634525	20091209	US20110047593	20110314
US20110084465	20110411	US20110092869	20110422	US20110096891	20110428
US20120442720	20120409	US20120442856	20120410	US20130847353	20130319
US20130867925	20130422	US20140306160	20140616	US20140306156	20140616
US20150724675	20150528	US20150961572	20151207		

Probable Assignee: NANOMIX INC

Assignee(s): (std): BRADLEY KEITH ; GRUNER GEORGE ; JOSHI VIKRAM ; HAN TZONG RU ; GABRIEL JEAN CHRISTOPHE P ; NANOMIX INC ; NIEMANN JOSEPH ; GANDHI SHRIPAL ; JOINER CHARLES STEVEN JR ; MICKELSON WILLIAM ; OLSON DARIN ; GANDHI SHRIPAL C ; JOHNSON BRADLEY N ; KUZMYCH OLEKSANDR ; JOSHI KANCHAN A ; GRUENER GEORGE ; GANDHI SHIRPAL C ; STAR ALEXANDER ; STETTER JOSEPH R ; WYATT JEFFREY ; STETTNER JOSEPH R ; SOSNOWSKI RON ; TU EUGENE ; VALCKE CHRISTIAN ; WANG QIAN ; PASSMORE JOHN L ; SKARUPO SERGEI ; PASSMORE JOHN LOREN ; RADTKEY RAY ; OUBORG WILLEM JAN ; RAMAKRISHNAN KASTOORIRANGANATH ; SKARUPO SERGIE ; ARMITAGE N PETER ; BEN BARAK NADAV ; COLLINS PHILIP G ; DAVIS ALONA ; CHANG DANIEL M ; CHANG YING LAN ; BRIMAN MIKHAIL ; DAVID THOMAS ; BRYANT CRAIG ; THOMAS DAVID ; UNIV CALIFORNIA ; RAMAKRISHNAN KASTOORIRANGANATHAN

Assignee(s): UNIV OF CALIFORNIA ; ALTERNATIVE ENERGY RESOURCES INC ; ARMITAGE N P ; SILICON VALLEY BANK ; THE UNIV OF CALIFORNIA ; THE REGENTS OF THE UNIVERSITY OF CALIFORNIA ; DAVIS ALONA J ; THE UNIV ; MORGAN STANLEY SENIOR FUNDING INC ; NXP BV ; NXP F K A FREESCALE SEMICONDUCTOR INC BV

Inventor(s): (std): COLLINS PHILIP G ; STAR ALEXANDER ; GRUNER GEORGE ; STETTER JOSEPH R ; ARMITAGE N P ; BRADLEY KEITH ; GABRIEL JEAN CHRISTOPHE P ; WYATT JEFFERY ; GANDHI SHRIPAL ; JOINER CHARLES STEVEN JR ; SOSNOWSKI RON ; TU EUGENE ; VALCKE CHRISTIAN ; VIKRAM JOSHI ; JOSEPH R STETNER ; JEFFREY WYATT ; ALEXANDER STAR ; GEORGE GRUNER ; BRIMAN MIKHAIL ; GANDHI SHRIPAL C ; OUBORG WILLEM JAN ; JOHNSON BRADLEY N ; BRYANT CRAIG ; RAMAKRISHNAN KASTOORIRANGANATH ; BEN BARAK NADAV ; ARMITAGE N PETER ; CHARLES STEVEN JOINER JR ; JEAN CHRISTOPHE P GABRIEL ; JOSHI KANCHAN A ; KUZMYCH OLEKSANDR ; SKARUPO SERGIE ; NIEMANN JOSEPH ; JOINER CHARLES S JR ; OLSON DARIN ; GRUENER GEORGE ; RAMAKRISHNAN KASTOORIRANGANATHAN ; GANDHI SHIRPAL C ; RADTKEY RAY ; CHANG YING LAN ; SKARUPO SERGEI ; PASSMORE JOHN L ; WANG QIAN ; STETNER JOSEPH R ; PASSMORE JOHN LOREN ; CHANG DANIEL M ; MICKELSON WILLIAM ; THOMAS DAVID ; WUDL FRED ; SWANSON BASIL ; COLLINS PHILIP ; GABRIEL JEAN CHRISTOPHE ; HAN TZONG RU ; DAVIS ALONA J ; STETTNER JOSEPH R ; JOSHI VIKRAM ; WYATT JEFFREY ; DAVIS ALONA ; GHANDI SHRIPAL C

Inventor(s): JOINER CHARLES SJR ; JOINER CHARLES S ; JOHNSON BRADLEY ; PASSMORE JOHN ; JOINER CHARLES ; CHANG DANIEL ; STETTER JOSEPH ; ARMITAGE N

Agent(s): MCLEISH NICHOLAS ALISTAIR MAXWELL; MASUI CHUJI; TOMITA HIROYUKI; SHAMOTO ICHIO; KOBAYASHI YASUSHI; SAKURAI CHIKANORI; CHIBA AKIO; BRIAN M BERLINER OMELVENY AND MYERS LLP; BRIAN M BERLINER ESQ OMELVENY AND MYERS LLP; O'MELVENY AND MYERS LLP; OMELVENY AND MYERS LLP; ATTN DAVID B MURPHY NANOMIX INC; O''MELVENY AND MYERS LLP, IP AND T CALENDAR DEPARTMENT LA-1118; OMELVENY AND MYERS LLP IP AND T CALENDAR DEPARTMENT LA 1118; BEYER WEAVER LLP; WEAVER AUSTIN VILLENEUVE AND SAMPSON LLP; NANOMIX INC; DENNIS ROBERT F; ROBERT F; WEAVER AUSTIN VILLENEUVE AND SAMSPSON LLP; BERGIN DENISE S ET AL; BERGIN DENISE ET AL

Designated states: AE AG AL AM AO AT AU AZ BA BB BE BF BG BH BJ BR BW BY BZ CA CF CG CH CI CM CN CO CR CU CY CZ DE DK DM DO DZ EC EE EG ES FI FR GA GB GD GE GH GM GN GQ GR GT GW HN HR HU ID IE IL IN IS IT JP KE KG KM KN KP KR KZ LA LC LI LK LR LS LT LU LV LY MA MC MD ME MG MK ML MN MR MT MW MX MY MZ NA NE NG NI NL NO NZ OM PG PH PL PT RO RS RU SC SD SE SG SI SK SL SM SN ST SV SY SZ TD TG TJ TM TN TR TT TZ UA UG US UZ VC VN YU ZA ZM ZW

14) Family number: 65747321 (CO14244029A)

© PatBase

Title: SISTEMA, METODO Y APARATO PARA INFUNDIR FLUIDO System, method and apparatus for infusing fluid (Machine translation)

Classifications:
International (IPC 8-9): A61J7/00 A61M1/28 A61M5/142 A61M5/145 A61M5/168 (Advanced/Invention)

Family:

Publication number	Publication date	Application number	Application date
CO14244029 A2	20161021	CO20140244029	20141105

Priority:

US20110578649P	20111221	US20110578658P	20111221	US20110578674P	20111221
WO2012US71490	20121221				

Probable Assignee: DEKA PRODUCTS PARTNERSHIP LTD

Assignee(s): DEKA PRODUCTS PARTNERSHIP LTD

Inventor(s): BOB D PERET ; BRIAN D TRACEY ; BRIAN H YOO ; CHRISTOPER PERRY ; CHRISTOPHER C LANGENFELD ; COLIN H MURPHY ; DAVID D B CANNAN ; DAVID JR BLUMBERG ; DEAN KAMEN ; DEREK G KANE ; GREGORY R JR LANIER ; JACOB W SCARPACI ; JASON A DEMERS ; JOHN M KERWIN ; KEVIN A DURAND ; LARRY B GRAY ; MARC A MANDRO ; MICHAEL J SLATE ; MICHAEL S PLACE ; RICHARD J LANIGAN ; RUSELL H BEAVIS ; STANLEY B III SMITH

Agent(s): ALVARO CORREA ORDONEZ

15) Family number: 50500323 (AU2011203494A)

© PatBase

Title: Sulfonated copolyetherester compositions from hydroxyalkanoic acids and shaped articles produced therefrom

Abstract: An aromatic copolyetherester comprising an acid component, a glycol component, and optionally an effective amount of a color reducing 5 agent, wherein the acid component consists essentially of a. about 98.9 to 1.0 mole percent, or from about 98.9 to 30 mole percent, or from about 98.9 to 50 mole percent, or from about 95 to 50 mole percent, of an aromatic dicarboxylic acid component based on 100 mole percent total acid component, and b. about 1.0 to 99.0 mole percent, or from about 1.0 10 to 70 mole percent, or from about 1 to 50 mole percent, or from about 5 to 50 mole percent, of a hydroxyalkanoic acid component being lactic acid, based on 100 mole percent total acid component, and c. about 0.1 to 10.0 mole percent, or from about 0.1 to 4 mole percent of a sulfonate component based on 100 mole percent total acid component, and d. 0 to 15 about 5.0 mole percent, or from 0 to about 1.0 mole percent of a polyfunctional branching agent selected from polyfunctional acid, glycol, and mixtures thereof based on 100 mole percent total acid component; and wherein the glycol component comprises: a. about 98.9 to 1.0 mole percent of a single first glycol component selected from ethylene glycol, 20 1,3-propanediol and 1,4- butanediol, based on 100 mole percent total glycol component, and b. about 0.1 to 30.0 mole percent, or from about 0.1 to 20 mole percent, or from about 0.1 to 15 mole percent, of a poly(alkylene ether) glycol component, based on 100 mole percent total glycol component, the poly(alkylene ether) glycol having a molecular 25 weight in the range of from about 500 to 4000, and c. 0 to about 5.0 mole percent of at least one of an other glycol component based on 100 mole percent total glycol component.

Classifications:
International (IPC 8-9): B32B27/10 B32B27/36 B65D65/40 B65D65/42 B65D65/46 C08G63/688 C08J5/18 C08J9/00 C08K13/04 C08K3/00 C08L67/00 C09D167/00 D01F6/62 D01F6/92 D01F8/14 (Advanced/Invention)
CPC: Y02W90/11

Family:

Publication number	Publication date	Application number	Application date
AU2011203494 AA	20110728	AU20110203494	20110711
AU2011203494 BB	20120726	AU20110203494	20110711

Priority:
US20040888046 20040709 AU20050265433 20050708 AU20110203494 20110711

Probable Assignee: DU PONT

Assignee(s): (std): DU PONT

Assignee(s): E I DU PONT DE NEMOURS AND CO ; E I DU PONT DE NEMOURS AND COMPANY

Inventor(s): (std): ALLEN HAYES RICHARD ; HAYES RICHARD ALLEN

Agent(s): HOULIHAN2; HOULIHAN²; HOULIHAN² PTY LTD

16) Family number: 53328428 (US2014216968A)

© PatBase

Title: DISPOSABLE RIGID CONTAINER FOR PHARMACEUTICAL COMPOSITIONS

Abstract: A single use rigid package containing pharmaceutical compositions which protects tablets, capsules, soft shell pills against hard transporting conditions and undesired rupture. The package comprises at least four sections made from a single sheet foldable into a folded configuration. At least two sections are carrier sections pivotally connected to each other and each comprising cavities for housing pharmaceutical compositions. Two sections are end sections not comprising cavities, the end sections being foldable to adjacent and at least partly covering the carrier sections when the sheet is folded so as to protect the carrier sections. The package allows for personal transportation, e.g. in a pocket, and it is easy and convenient to open for people of all levels of ability and dexterity. Its design allows for transport as standard mail withstanding temperature fluctuation, vibrations and shocks, mechanical pressure and variation in atmospheric pressure which may occur during transport.

Classifications:
International (IPC 8-9): A61J1/03 A61J7/04 B65D75/32 B65D75/36 B65D83/04 (Advanced/Invention)
CPC: A61J1/035 A61J7/04 A61J2205/20 B65D75/327 B65D83/0463 F04C2270/0421
US: 206/438

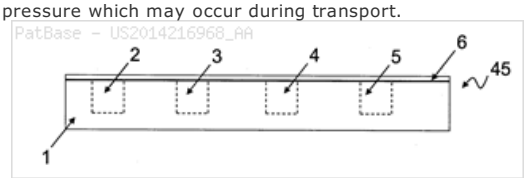

Family:

Publication number	Publication date	Application number	Application date
DE602012012205 D1	20151217	DE201260012205T	20120921
DK2758022 T3	20160215	DK20120766870T	20120921
EP2758022 A1	20140730	EP20120766870	20120921
EP2758022 B1	20151104	EP20120766870	20120921
US2014216968 AA	20140807	US20120346170	20120921
US9592179 BB	20170314	US20120346170	20120921
WO13041098 A1	20130328	WO2012DK00105	20120921

Priority:

DK20110070518 20110921 US20110537408P 20110921 EP20120766870 20120921
WO2012DK00105 20120921 US20120346170 20120921

Probable Assignee: MEDCOMB HOLDING APS

Assignee(s): (std): MEDCOMB HOLDING APS

Inventor(s): (std): WAGNER FLEMMING ; WAGNER JOHN

Agent(s): PLOUGMANN AND VINGTOFT A S; KNOBBE MARTENS OLSON AND BEAR LLP; PLOUGMANN AND VINGTOFT A/S

Designated states: AE AG AL AM AO AT AU AZ BA BB BE BF BG BH BJ BN BR BW BY BZ CA CF CG CH CI CL CM CN CO CR CU CY CZ DE DK DM DO DZ EC EE EG ES FI FR GA GB GD GE GH GM GN GQ GR GT GW HN HR HU ID IE IL IN IS IT JP KE KG KM KN KP KR KZ LA LC LI LK LR LS LT LU LV LY MA MC MD ME MG MK ML MN MR MT MW MX MY MZ NA NE NG NI NL NO NZ OM PA PE PG PH PL PT QA RO RS RU RW SC SD SE SG SI SK SL SM SN ST SV SY SZ TD TG TH TJ TM TN TR TT TZ UA UG US UZ VC VN ZA ZM ZW

17) Family number: 33376435 (EP1308263A2)

© PatBase

Title: HIGHLY INORGANICALLY FILLED COMPOSITIONS

Abstract: Compositions, methods, and apparatus for manufacturing sheets having a highly inorganically filled matrix prepared by mixing together an organic polymer binder, water, one or more inorganic aggregate materials, fibers, and optional admixtures in the correct proportions in order to form a sheet which has the desired performance criteria. The inorganically filled mixtures are formed into sheets by first extruding the mixtures and then passing the extruded materials between a set of rollers. The rolled sheets are dried in an accelerated manner to form a substantially hardened sheet, such as by heated rollers and/or a drying chamber. The inorganically filled sheets may have properties substantially similar to sheets presently made from traditional materials like paper, paperboard, polystyrene, plastic, or metal. Such sheets can be rolled, pressed, scored, perforated, folded, and glued. They have particular utility in the mass production of articles, such as food and beverage containers, and packaging materials.

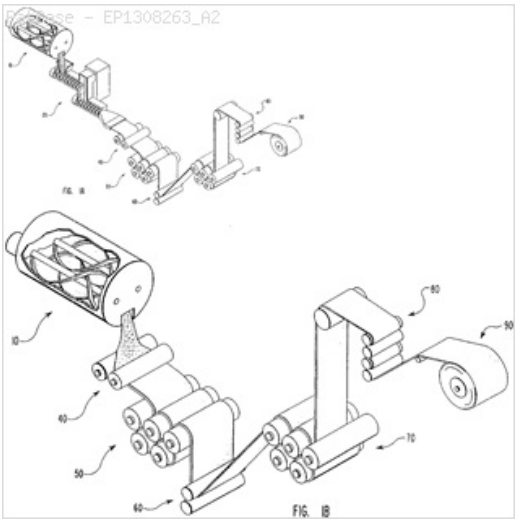

Classifications:
International (IPC 8-9): B05B11/00 B28B1/00 B28B1/52 B28B11/00 B28B21/00 B28B21/72 B28B23/00 B28B3/12 B28B3/20 B29C43/00 B29C43/02 B29C43/22 B29C43/24 B29C43/34 B29C43/36 B29C43/46 B29C49/00 B29C51/00 B29C53/06 B29C55/18 B29C67/24 B29C70/50 B29C71/00 B31B17/00 B32B1/02 B32B1/08 B32B13/00 B32B13/02 B32B27/04 B32B27/20 B32B5/02 B32B9/00 B65D43/16 B65D65/38 B65D65/46 C04B14/06 C04B16/02 C04B20/00 C04B22/04 C04B24/14 C04B24/38 C04B26/00 C04B26/02 C04B26/28 C04B28/00 C04B28/02 C04B40/00 C08J5/18 C08L1/00 C08L1/28 C08L101/00 C08L29/02 C08L29/04 C08L3/00 C08L3/02 C08L33/02 C08L33/24 C08L39/00 C08L39/06 C08L5/02 C08L5/12 C08L5/14 C08L71/00 C08L71/02 C08L75/00 C08L89/06 C08L91/08 C08L97/02 C09D133/04 C09D133/06 C09D161/20 C09D161/28 C09D167/00 C09D167/04 C09D171/00 C09D171/02 D21F11/00 E05D1/02 (Advanced/Invention); B05C5/02 B29C43/08 B29C53/58 B32B37/12 (Advanced/Non-invention)
International (IPC 1-7): B05B11/00 B28B1/00 B28B1/52 B28B23/00 B28B3/20 B29C43/00 B29C51/00 B29C67/24 B29C70/50 B32B5/02 C04B14/06 C04B28/02 C08L1/28
CPC: Y02W30/97 B05B11/0037 B28B1/00 B28B1/52 B28B3/126 B28B3/20 B28B11/00 B28B11/003 B28B11/008 B28B23/00 B28B23/0081 B28B23/0087 B29C43/00 B29C43/003 B29C43/08 B29C43/222 B29C43/24 B29C43/34 B29C43/46 B29C49/0005 B29C51/002 B29C53/063 B29C53/58 B29C55/18 B29C67/24 B29C67/242 B29C70/50 B29C71/0009 B29C2043/022 B29C2043/023 B29C2043/3433 B29C2043/3689 B29C2043/463 B29C2043/464 B29C2043/465 B29C2043/466 B29C2795/007 B29K2001/00 B29K2003/00 B29K2005/00 B29K2089/00 B29K2105/04 B29K2105/12 B29K2105/16 B29L2024/00 B29L2031/608 B29L2031/712 B29L2031/7132 B31D1/005 B32B5/02 B32B9/00 B32B27/04 B32B37/12 B65D43/162 B65D65/38 B65D65/466 B65D2565/385 C04B14/064 C04B16/02 C04B20/002 C04B22/04 C04B24/14 C04B24/38 C04B26/00 C04B26/02 C04B26/026 C04B26/28 C04B26/285 C04B28/00 C04B28/02 C04B40/00 C04B40/0092 C04B2111/00129 C04B2111/00612 C04B2111/00948 C04B2111/50 C08J5/18 C08J2323/02 C08L1/28 C08L1/286 C08L3/00 C08L3/02 C08L5/02 C08L5/12 C08L5/14 C08L89/06 C08L97/02 E05Y2900/602 B31B50/32 B31B2105/0022 B32B1/02 B32B1/08 B32B5/18 B32B13/04 B32B13/06 B32B13/12 B32B13/14 B32B27/20 B32B27/34 B32B2266/0228 B32B2439/00 B32B2597/00 E05D1/02 B29C48/001 B29C48/0011 B29C48/0012 B29C48/0017 B29C48/0019 B29C48/0022 B29C48/07 B29C48/08 B29C48/09 B29C48/13 B05B1/34 B32B13/02
European: B05B11/00B5 B28B1/00 B28B1/52 B28B11/00 B28B11/00E B28B11/00E3 B28B23/00 B28B23/00Z B28B23/00Z1 B28B3/12C B28B3/20 B29C43/00B B29C43/22B B29C43/24 B29C43/34 B29C43/46 B29C47/00J5 B29C49/00B B29C51/00B B29C53/06B B29C55/18 B29C67/24 B29C67/24C B29C70/50 B29C71/00C B31B1/32 B31B17/00 B31D1/00H1 B32B13/02 B32B27/04 B32B27/20 B32B5/02 B32B9/00 B65D43/16B B65D65/38 B65D65/46C C04B14/06G C04B16/02 C04B20/00D2 C04B22/04 C04B24/14 C04B24/38 C04B26/00 C04B26/02 C04B26/02B C04B26/28 C04B26/28B C04B28/00 C04B28/02 C04B40/00 C04B40/00W C08J5/18 C08L1/28 C08L1/28F C08L3/00 C08L3/02 C08L5/02 C08L5/12 C08L5/14 C08L89/06 C08L97/02 E05D1/02 L29C43/00 L29C43/02B1 L29C43/02B2 L29C43/08 L29C43/34B L29C43/36H2 L29C43/46 L29C43/46A2 L29C43/46A3 L29C43/46A4 L29C43/46B L29C47/00J4 L29C47/00J5 L29C47/00J6 L29C47/00L L29C47/00L12 L29C47/00L4 L29C47/00L5 L29C47/00L7 L29C47/00L9 L29C53/58 L29C795/00D L29K1/00 L29K105/04 L29K105/12 L29K105/16 L29K3/00 L29K5/00 L29K89/00 L29L24/00 L29L31/60C L29L31/712 L29L31/7132 L31B201/26A1A L31B217/08A L32B37/12 L65D565/38Y7 M04B111/00M14 M04B111/00T6 M04B111/00T66 M04B111/50 M08J323/02 P05D1/02 P05Y900/602

Family:

Publication number	Publication date	Application number	Application date
EP1308263 A2	20030507	EP20030001160	19931124
EP1308263 A3	20030521	EP20030001160	19931124

Priority:

US19920982383 19921125 US19930152354 19931119 US19930154436 19931119
EP19940903306 19931124

Probable Assignee: KHASHOGGI E IND

Assignee(s): (std): KHASHOGGI E IND

Assignee(s): E KHASHOGGI IND LLC ; E KHASHOGGI INDUSTRIES LLC

Inventor(s): (std): ANDERSEN PER JUST ; HODSON SIMON K

Designated states: AT BE CH DE DK ES FR GB GR IE IT LI LU MC NL PT SE

18) Family number: 23235437 (US2002065399A) © PatBase

Title: Inhaleable spray dried 4-helix bundle protein powders having minimized aggregation

Abstract: The present invention provides highly dispersible spray-dried powder compositions, and in particular, inhaleable dry powder compositions for aerosolized delivery to the lungs. The powders of the invention are produced by spray drying a 4 alpha-helix bundle protein under conditions which both (i) protect the protein from aggregation and (ii) provide particles suitable for inhalation (i.e., demonstrating superior aerosol performance).

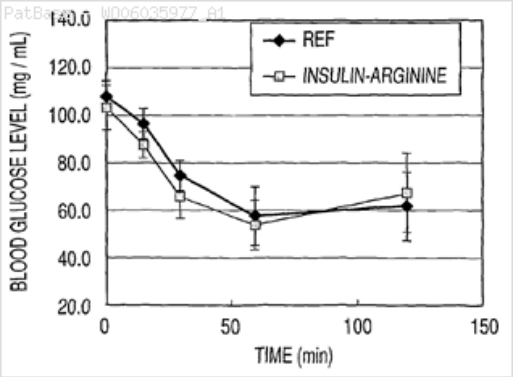

Classifications:
International (IPC 8-9): A61K31/19 A61K38/00 A61K38/02 A61K38/12 A61K38/21 A61K38/23 A61K38/26 A61K38/27 A61K38/28 A61K38/55 A61K39/39 A61K39/395 A61K47/04 A61K47/12 A61K47/14 A61K47/16 A61K47/18 A61K47/22 A61K47/26 A61K47/30 A61K47/34 A61K47/42 A61K9/00 A61K9/08 A61K9/12 A61K9/14 A61K9/16 A61K9/72 A61M11/00 A61M11/04 A61M15/00 A61P3/10 A61P43/00 A61P5/50 B05C11/10 B05C5/00 B41J2/06 B41J2/17 B41J2/175 C09D11/04 G01D11/00 G01F13/00 G01N1/00 (Advanced/Invention);
A01N37/00 A61K9/12 A61K9/14 A61M15/00 B41J2/05 C11D10/00 C12N5/00 (Advanced/Non-invention);
A61K31/185 A61K38/00 A61K38/02 A61K38/12 A61K38/21 A61K38/23 A61K38/26 A61K38/27 A61K38/28 A61K38/55 A61K39/39 A61K39/395 A61K47/02 A61K47/12 A61K47/14 A61K47/16 A61K47/22 A61K47/26 A61K47/30 A61K47/34 A61K47/42 A61K9/00 A61K9/08 A61K9/12 A61K9/14 A61K9/16 A61K9/72 A61M11/00 A61M15/00 A61P3/00 A61P43/00 A61P5/00 B05C11/10 B05C5/00 B41J2/17 B41J2/175 C09D11/04 G01D11/00 G01F13/00 G01N1/00 (Core/Invention);
A01N37/00 A61K9/12 (Core/Non-invention)
International (IPC 1-7): A61K38/00 A61K38/19 A61K38/20 A61K38/21 A61K38/27 A61K47/04 A61K47/18 A61K47/26 A61K47/42 A61K9/00 A61K9/12 A61K9/14 A61K9/16 A61K9/72 A61L9/04 C07K14/61
CPC: A61K9/0075 A61K9/1688 A61K9/1694 B41J29/13 C09D11/30 A61M2205/8206 A61M2205/123 A61K47/26 A61K38/00 A61K9/0078 A61K47/16 B01J2219/00378 A61K9/0073 A61M15/025 Y10S514/866
European: A61K47/16 A61K47/26 A61K9/00M20B A61K9/00M20B3 A61K9/00M20B5 A61K9/16P2 A61K9/16P4 A61M15/02 B41J29/13 C09D11/30 K61K38/00 K61M15/02A K61M205/12B K61M205/82B L01J219/00C2D6
US: 106/124.1 106/124.100S 106/287.3 106/287.300S 106/31.13 106/31.130S 128/200.14 128/200.140P 128/200.16 128/203.12 128/203.15 128/203.150S 128/203.26 128/203.27 128/203.270P 128/204.24 347/1 347/100 347/100P 347/20 347/20S 347/54 347/56 347/63 347/68 347/87 347/87P 400/106 424/130.1 424/130.100S 424/43 424/45 424/46 424/46P 424/46S 424/489 424/568 424/568S 424/85.1 424/85.100S 424/85.2 424/85.200S 424/85.4 424/85.400P 424/85.400S 424/85.6 424/85.600S 424/94.1 424/94.100S 435/395 514/1.1 514/11.3 514/11.300S 514/11.4 514/11.7 514/11.700S 514/11.9 514/11.900S 514/12 514/15.4 514/15.5 514/15.500S 514/2 514/20.1 514/20.100S 514/3 514/5.9 514/5.900S 514/557 514/7.9 514/7.900S 514/866 530/300 530/300S 530/350 530/350S 530/399 530/399S 604/68 604/68S
JP F-Term: 4C076 4C076/AA29 4C076/AA93 4C076/BB27 4C076/CC21 4C076/DD26 4C076/DD51 4C076/DD67 4C076/EE41 4C076/FF63 4C076/GG09 4C084 4C084/AA03 4C084/BA01 4C084/BA08 4C084/BA22 4C084/CA18 4C084/CA53 4C084/DB22 4C084/MA05 4C084/MA13 4C084/MA43 4C084/MA56 4C084/NA03 4C084/NA10 4C084/ZC03 4C076/AA12 4C076/AA95 4C076/CC29 4C076/DD09 4C076/DD46 4C076/FF15 4C084/AA01 4C084/AA06 4C084/BA03 4C084/MA16 4C103 4F041 4F041/AB01 4F041/BA10 4F041/BA13 4F041/BA34 4F042 4F042/CA01 4F042/CB03 4F042/CB11 4C076/AA25 4C076/BB01 4C076/BB22 4C076/CC30 4C076/DD13 4C076/DD19 4C076/DD52 4C076/DD53 4C076/DD60 4C076/FF36 4C076/FF68 4C084/BA44 4C084/DA01 4C084/DA21 4C084/DB31 4C084/DB34 4C084/DB35 4C084/DC32 4C084/MA52 4C084/MA57 4C085 4C085/AA40 4C085/BB31 4C085/GG01 2G052 2G052/AA28 2G052/AD06 2G052/AD26 2G052/CA03 2G052/CA11 2G052/CA22 2G052/CA29 2G052/DA05 2G052/HC03 2G052/HC07 2G052/HC25 2G052/HC32 2G052/JA08 4C076/DD43 4C076/FF17 4C076/FF61 4C084/MA17 4C084/NA11 4C084/ZC04 4C084/ZC35 4C201
JP F-Index: A61K37/36 A61K38/00 A61K38/27 A61K47/04 A61K47/18 A61K47/26 A61K47/42 A61K9/14 A61K9/72 A61K37/02 A61K38/02 A61K47/14 A61K47/34 A61K9/08 A61K9/12 A61M11/00/F A61M15/00/Z B05C11/10 B05C5/00/101 A61K37/26 A61K37/28 A61K37/30 A61K37/64 A61K37/66 A61K38/19 A61K38/21 A61K38/23 A61K38/26 A61K38/28 A61K38/55 A61K39/395 A61K47/16 A61K47/22 A61K47/30 G01N1/00/101/K A61K47/12 A61M11/04/300/A A61P3/10 A61P5/50

Family:

Publication number	Publication date	Application number	Application date
AU2001281113 AA	20020218	AU20010281113	20010806
AU2001281113 BB	20060720	AU20010281113	20010806
AU200181113 A1	20020218	AU20010081113	20010806
AU200181113 A5	20020218	AU20010081113	20010806
CA2418960 AA	20030206	CA20012418960	20010806
CN101027076 A	20070829	CN200580032497	20050922
CN101027076 B	20110615	CN200580032497	20050922
CN101027077 A	20070829	CN200580032498	20050927
CN101027077 B	20120919	CN200580032498	20050927
CN1446077 A	20031001	CN20018013796	20010806
EP1309312 A2	20030514	EP20010959572	20010806
EP1776135 A1	20070425	EP20050788361	20050927
EP1776135 A4	20121128	EP20050788361	20050927
EP1784202 A1	20070516	EP20050787530	20050922
EP1784202 A4	20121128	EP20050787530	20050922
IN01747CN2007 A	20070831	IN2007CN01747	20070427
IN01757CN2007 A	20070831	IN2007CN01757	20070427
JP2004515467 T2	20040527	JP20020517033T	20010806
JP2006117632 A2	20060511	JP20050252154	20050831
JP2006117634 A2	20060511	JP20050252270	20050831
JP2007263589 A2	20071011	JP20060085565	20060327
JP2008169122 A2	20080724	JP20070001179	20070109
JP4147234 B2	20080910	JP20050252154	20050831
JP4147235 B2	20080910	JP20050252270	20050831

JP4564936 B2	20101020	JP20060085565	20060327
KR20030038690 A	20030516	KR20037001831	20010806
MXPA03001092 A1	20030925	MX2003PA01092	20010806
RU2342947 C1	20090110	RU20070115884	20050927
RU2342948 C1	20090110	RU20070115916	20050922
TWI283182 B	20070701	TW20010119169	20010806
US2002065399 AA	20020530	US20010923519	20010807
US2003190291 AA	20031009	US20030389628	20030314
US2005186143 AA	20050825	US20040991344	20041117
US2007206081 AA	20070906	US20070746305	20070509
US2007222842 AA	20070927	US20050570744	20050927
US2007248571 AA	20071025	US20050628452	20050922
US2008029083 AA	20080207	US20070724299	20070315
US2011079223 AA	20110407	US20100968088	20101214
US6569406 BB	20030527	US20010923519	20010807
US6838075 BB	20050104	US20030389628	20030314
US7605124 BB	20091020	US20070746305	20070509
US7827982 BB	20101109	US20070724299	20070315
US8029609 BB	20111004	US20050570744	20050927
US8833363 BB	20140916	US20100968088	20101214
WO0211695 A2	20020214	WO2001US24632	20010806
WO0211695 A3	20020425	WO2001US24632	20010806
WO06035923 A1	20060406	WO2005JP18070	20050922
WO06035977 A1	20060406	WO2005JP18247	20050927

Priority:

US20000223144P	20000807	US20000228634P	20000829	US20000240478P	20001013
WO2001US24632	20010806	US20010923519	20010807	US20030389628	20030314
JP20040279864	20040927	US20040991344	20041117	JP20050252154	20050831
JP20050252270	20050831	WO2005JP18070	20050922	US20050570744	20050927
WO2005JP18247	20050927	JP20060085565	20060327	US20060628452	20061204
US20060570744	20061215	JP20070001179	20070109	US20070724299	20070315
US20070746305	20070509	US20100968088	20101214		

Probable Assignee: CANON INC

Assignee(s): (std): CANON KK ; HASTEDT JAYNE E ; LEHRMAN S RUSS ; CHIANG HI SHI ; LESIKAR DAVID ; GONG DAVID ; INHALE THERAPEUTIC SYST ; INHALE THERAPEUTIC SYSTEMS INC ; BENNETT DAVID B ; CABOT KIRSTEN ; MASADA YOHEI ; KANEKO HIDEKI ; STEVENSON CYNTHIA ; YANG BING ; NEKTAR THERAPEUTICS ; NEKTAR THERAPEUTICS AL CORP ; NYCOTA PHARMACEUTICAL INC ; SUGITA MASARU ; MIYAZAKI TAKESHI

Assignee(s): NOVARTIS PHARMA AG ; KEHNON KABUSIKI KAJSJA ; CANON INC ; CANON K K ; CANON KABUSHIKI KAISHA ; LEHRMAN S

Inventor(s): (std): BENNETT DAVID B ; CABOT KIRSTEN ; CHIANG HI SHI ; CYNTHIA STEVENSON ; HASTEDT JAYNE E ; LEHRMAN S RUSS ; GONG DAVID ; LEHRMAN RUSS ; LEHRMAN S R ; HIDEKI KANEKO ; KANEKO HIDEKI ; KANEKO KHIDEKI ; STEVENSON CYNTHIA ; LESIKAR DAVID ; YANG BING ; LEHUMAN S RUSS ; S RUSS LEHUMAN ; JAYNE E HASTEDT ; MASARU SUGITA ; TAKESHI MIYAZAKI ; YOHEI MASADA ; TAKESHI MASADA YOHEI SUGITA MA ; SUGITA MASARU ; MIYAZAKI TAKESHI ; MASADA YOHEI ; SAKURADA NAOUSHI ; SAKURADA NAOKO ; MIJAZAKI TAKESI ; MASADA JOKHEI

Inventor(s): BENNETT DAVID ; MASADA YOHEI SUGITA MASARU KANEKO HIDEKI ; LEHRMAN S ; HASTEDT JAYNE ; MASADA YOHEI SUGITA MASARU KANEKO HIDEKI MIYAZAKITAKESHI ; S RUSS LEHRMAN ; HI SHI CHIANG ; KIRSTEN CABOT ; CHIANG, HI-SHI ; CABOT, KIRSTEN M. ; DAVID B BENNETT ; DAVID LESIKAR ; DAVID GONG ; BING YANG ; BENNETT DAVID B AND

Agent(s): GRIFFITH HACK; GOWLING LAFLEUR HENDERSON LLP; NEKTAR THERAPEUTICS; FITZPATRICK CELLA HARPER AND SCINTO; SUSAN T; MARK A

Designated states: AE AG AL AM AT AU AZ BA BB BE BF BG BJ BR BW BY BZ CA CF CG CH CI CM CN CO CR CU CY CZ DE DK DM DZ EC EE EG ES FI FR GA GB GD GE GH GM GN GQ GR GW HR HU ID IE IL IN IS IT JP KE KG KM KP KR KZ LC LI LK LR LS LT LU LV LY MA MC MD MG MK ML MN MR MW MX MZ NA NE NG NI NL NO NZ OM PG PH PL PT RO RU SC SD SE SG SI SK SL SM SN SY SZ TD TG TJ TM TN TR TT TZ UA UG US UZ VC VN YU ZA ZM ZW

19) Family number: 52413468 (US2012298676A)

© PatBase

Title: CONTAINERS,ETC WITH OR WITHOUT MULTI-PRODUCTS AND/OR MULTI-PD'S ARE NOT

Abstract: Pocket department (PD) etc in etc: sports container beverage and food containers etc products etc. Which said PD etc can also cool and heat etc holds etc products etc like power bars etc from melting etc and can combine drinks etc and food etc. Furthermore invention shows also backward and forward products etc and MULTI PDS and MULTI PRODUCTS etc or not and shows with or without products etc and shows companies and customers rights etc and define display PD etc as PD and can be in any product etc not just food and drinks containers and PD etc can be also place in the housing casing the body of any products etc and product etc can be within product etc and invention shows same contents etc. Invention for plants pets humans etc and use each others PDS products materials parts etc.

Classifications:
International (IPC 8-9): B23P17/00 B65D25/04 (Advanced/Invention)
CPC: B65D1/04 B65D51/28 B65D81/3216 B65D47/06 Y10T29/49
US: 220/500 220/592.21 29/592

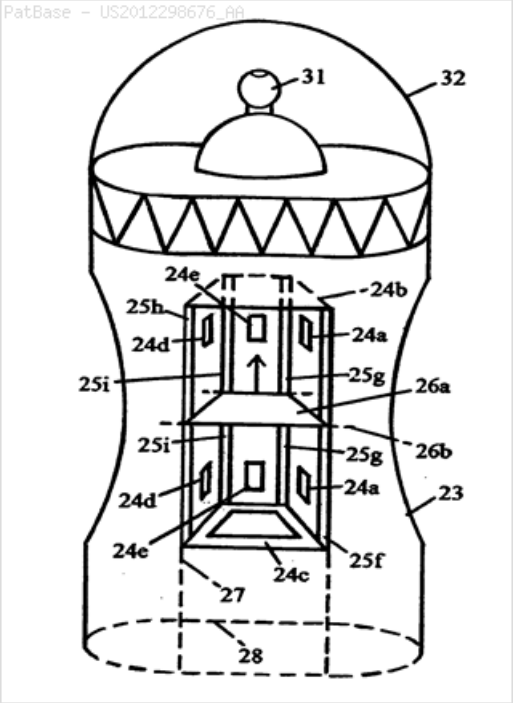

Family:

Publication number	Publication date	Application number	Application date
US2012298676 AA	20121129	US20120462706	20120502

Priority:

US20110457636P 20110503 US20120462706 20120502

Probable Assignee: COOKS KRISTOFFER

Assignee(s): (std)**:** COOKS KRISTOFFER

Inventor(s): (std)**:** COOKS KRISTOFFER

20) Family number: 31395563 (US2004254332A)

© PatBase

Title: ALIPHATIC-AROMATIC POLYETHERESTER COMPOSITIONS, ARTICLES, FILMS, COATING AND LAMINATES AND PROCESSES FOR PRODUCING SAME

Abstract: Aliphatic-aromatic polyetherester compositions, articles made from the aliphatic-aromatic polyetherester compositions, and processes for producing the aliphatic-aromatic polyetherester compositions and articles are provided. Articles that can be made from the aliphatic-aromatic polyetherester compositions include films, coatings and laminates. Some of the compositions and articles are biocompostable. The films can further be used to form shaped articles such as sheets, food packaging such as sandwich wraps, thermoformed containers, and coatings for, for example, films and other substrates. The aliphatic-aromatic polyetheresters are based on copolyesters produced from a mixture of aromatic dicarboxylic acids, aliphatic dicarboxylic acids, poly(alkyene ether) glycols, and glycols.

Classifications:

International (IPC 8-9): B32B27/00 B32B27/06 B32B27/36 B32B27/40 B65D1/00 B65D30/02 B65D65/02 B65D65/40 B65D65/42 B65D65/46 C08G63/02 C08G63/12 C08G63/183 C08G63/66 C08G63/672 C08G63/688 C08J5/18 C08J9/04 C08L67/00 C08L67/02 C09D167/00 D21H19/28 (Advanced/Invention);
C08L101/16 C08L3/02 C08L67/02 C08L67/04 C08L69/00 C08L77/12 D21H27/10 (Advanced/Non-invention);
B32B27/00 B32B27/06 B32B27/36 B32B27/40 B65D1/00 B65D30/02 B65D65/02 B65D65/38 B65D65/40 B65D65/46 C08G63/00 C08J5/18 C08J9/00 C08L67/00 C09D167/00 D21H19/00 (Core/Invention);
C08L101/00 C08L3/00 C08L69/00 C08L77/00 D21H27/10 (Core/Non-invention)
International (IPC 1-7): B32B27/00 B32B27/06 B32B27/36 B32B27/40 C08G63/02 C08G63/12 C08G63/183 C08G63/66 C08G63/672 C08L67/00
CPC: Y10T428/31504 Y10T428/31565 Y10T428/31786 Y10T442/2139 Y10T442/2221 B32B27/36 C08G63/6886 C08L3/02 C08L67/00 C08L67/025 C08L67/04 C08L69/00 C08L77/12 D21H19/28 D21H27/10 B32B27/06 B32B27/28 B32B2439/70 C09D167/00
European: B32B27/36 C08G63/688D2 C08L67/00 C09D167/00 D21H19/28 M08L3/02 M08L67/00 M08L67/02B M08L67/04 M08L69/00 M08L77/12 N21H27/10
US: 428/411.1 428/423.7 428/48 428/480 428/480S 442/76 442/86 528/272 528/296 528/296P 528/300 528/300S
JP F-Term: 3E033 3E033/AA01 3E033/AA08 3E033/AA09 3E033/AA10 3E033/BA17 3E033/BA30 3E033/BB08 3E033/CA20 3E033/EA10 3E064 3E064/BA21 3E064/BA54 3E064/BA60 3E064/BB01 3E064/BC20 3E064/EA30 3E086 3E086/AD01 3E086/AD02 3E086/AD04 3E086/AD05 3E086/AD06 3E086/AD07 3E086/AD13 3E086/AD17 3E086/BA02 3E086/BA04 3E086/BA13 3E086/BA14 3E086/BA15 3E086/BA24 3E086/BA29 3E086/BA33 3E086/BA35 3E086/BB90 3E086/CA01 3E086/CA11 4F071 4F071/AA08 4F071/AA09 4F071/AA47 4F071/AB03 4F071/AB18 4F071/AB21 4F071/AB24 4F071/AB26 4F071/AB28 4F071/AB29 4F071/AE17 4F071/BA01 4F071/BB06 4F071/BB08 4F071/BC01 4F071/BC12 4F074 4F074/AA66 4F074/AG20 4F074/BA03 4F074/BA12 4F074/BA13 4F074/BA16 4F074/BA17 4F074/BA32 4F074/BA35 4F074/BA36 4F074/BA37 4F074/BA53 4F074/CA22 4F100 4F100/AA00/B 4F100/AB01/B 4F100/AJ06/B 4F100/AJ07/A 4F100/AJ07/B 4F100/AK01/B 4F100/AK41/A 4F100/AK41/J 4F100/AK54/A 4F100/AK54/J 4F100/AL01/A 4F100/AL05/A 4F100/AT00/B 4F100/BA02 4F100/CA23/A 4F100/DE01/A 4F100/DG10/B 4F100/DG12/B 4F100/DG13/B 4F100/DG15/B 4F100/EH46/A 4F100/GB15 4F100/GB16 4F100/JA06/A 4F100/JC00/A 4F100/YY00/A 4J002 4J002/AB01/2 4J002/AB04/2 4J002/CF03/2 4J002/CF14/1 4J002/CL08/2 4J002/DA03/6 4J002/DE13/6 4J002/DE23/6 4J002/DJ00/6 4J002/DJ01/6 4J002/DJ04/6 4J002/DL00/6 4J002/FD01/6 4J002/GF00 4J002/GG00 4J002/GG02 4J002/GK01 4J002/GT00 4J029 4J029/AA03 4J029/AB01 4J029/AC03 4J029/AE03 4J029/BA01 4J029/BA02 4J029/BA03 4J029/BA04 4J029/BA05 4J029/BD02 4J029/BD07/A 4J029/BE04 4J029/BF09 4J029/BF21 4J029/BF25 4J029/CA02

4J029/CA03 4J029/CA04 4J029/CA05 4J029/CA06 4J029/CA09 4J029/CB05/A 4J029/CB06/A 4J029/CC05/A 4J029/CC06/A 4J029/CH02 4J029/DB07 4J029/DB13 4J029/FC02 4J029/FC03 4J029/FC08 4J029/FC12 4J029/FC14 4J029/FC16 4J029/JE18/2 4J029/JF47/1 4J029/JF54/1 4J029/KE03 4J029/KE05 4J200 4J200/AA02 4J200/AA04 4J200/AA06 4J200/BA02 4J200/BA11 4J200/CA01 4J200/CA02 4J200/CA03 4J200/CA04 4J200/CA05 4J200/CA06 4J200/CA09 4J200/DA03 4J200/DA17 4J200/EA11
JP F-Index: B32B27/36 B65D1/00/A B65D1/00/B B65D1/00/C B65D1/00/110 B65D1/26/110 B65D1/34 B65D30/02 B65D65/02/E B65D65/40/D B65D65/42/C B65D65/46 C08G63/66 C08J5/18 C08J9/04/101 C08L101/16 C08L67/02
JP Facet: BRQ BSF BSG CFD

Family:

Publication number	Publication date	Application number	Application date
CN100537633 C	20090909	CN200480022043	20040610
CN1829758 A	20060906	CN200480022043	20040610
EP1631612 A1	20060308	EP20040776606	20040610
JP2007508412 T2	20070405	JP20060533798T	20040610
US2004254332 AA	20041216	US20030459161	20030611
US7144632 BB	20061205	US20030459161	20030611
WO05003209 A1	20050113	WO2004US19065	20040610

Priority:

US20030459161 20030611 WO2004US19065 20040610

Probable Assignee: EI DU PONT DE NEMOURS AND CO

Assignee(s): (std): DU PONT ; HAYES RICHARD ALLEN ; EIDU PONT DE NEMOURS AND CO

Assignee(s): EI DUPONT DE NEMOURS AND CO ; E I DU PONT DE NEMOURS AND CO ; E I DU PONT DE NEMOURS AND COMPANY ; E I DUPONT DE NEMOURS AND COMPANY ; EI DU PONT DE NEMOURS AND CO

Inventor(s): (std): HAYES RICHARD ALLEN ; ALLEN HAYES RICHARD

Agent(s): ABE KAZUO; TANI YOSHIKAZU; GAIL A

Designated states: AE AG AL AM AT AU AZ BA BB BE BF BG BJ BR BW BY BZ CA CF CG CH CI CM CN CO CR CU CY CZ DE DK DM DZ EC EE EG ES FI FR GA GB GD GE GH GM GN GQ GR GW HR HU ID IE IL IN IS IT JP KE KG KP KR KZ LC LK LR LS LT LU LV MA MC MD MG MK ML MN MR MW MX MZ NA NE NI NL NO NZ OM PG PH PL PT RO RU SC SD SE SG SI SK SL SN SY SZ TD TG TJ TM TN TR TT TZ UA UG US UZ VC VN YU ZA ZM ZW

21) Family number: 31485649 (US2005058689A) © PatBase

Title: ANTIFUNGAL PAINTS AND COATINGS

Abstract: Antifungal and antibacterial peptides, polypeptides and proteins as antifungal additives for paint and other coatings are disclosed, along with antifungal compositions, and coated surfaces with antifungal properties. Methods of using the coatings for treating and/or inhibiting growth of mold, mildew and other fungi and bacteria on objects such as building materials that are susceptible to such infestation are also disclosed.

Classifications:
International (IPC 8-9): A01N A01N25/00 A01N33/08 A01N37/18 A01N37/44 A01N37/46 A01N63/00 A01N63/02 A01P1/00 A01P3/00 A61F13/00 A61K31/74 A61K38/00 A61K38/08 A61K38/10 A61K47/48 B05D3/00 B05D5/00 B08B3/00 B32B3/12 B32B5/02 B65D81/00 B65D85/84 C07K14/00 C07K14/435 C07K17/00 C07K2/00 C07K5/08 C07K5/10 C07K7/00 C07K7/06 C07K7/08 C08G63/91 C08L89/00 C09D C09D133/00 C09D189/00 C09D201/00 C09D5/14 C09D5/16 C09D7/00 C09D7/12 C09J11/08 C12N C12N11/16 C12N9/00 C12N9/16 C12N9/18 C12N9/20 C12N9/48 C12N9/76 C12N9/78 C12Q1/00 C12Q1/34 C12Q1/527 C12S9/00 (Advanced/Invention);
A01N33/00 A01N37/18 A01N37/44 A01N63/00 A01P1/00 A01P3/00 A61F13/00 A61K47/48 B05D3/00 C07K14/00 C07K5/00 C07K7/00 C08G63/00 C08L89/00 C09D201/00 C09D5/14 C09D5/16 C09D7/12 C09J11/00 C12N11/00 C12N9/00 C12N9/16 C12N9/48 C12N9/76 C12N9/78 (Core/Invention);
A01N C09D (Subclass/Invention)
International (IPC 1-7): A61K38/00 C08L89/00 C09D201/00 C09D5/14 C09D5/16
CPC: A01N37/46 C07K14/4723 A01N63/00 B08B17/02 C07K7/06 C07K7/08 C09D5/1693 C09D189/00 C12Q1/34 C12Q1/44 C12Q1/61 C09D5/1637 Y10T428/24149 Y10T442/2279 C09D5/1668 C09D5/008 D06M16/003 C09D7/63 C09D7/70 C09D7/65 C09D5/1625 A01N63/02 C08L89/00 C09D5/14 B29C48/30 B29C48/32
European: A01N37/46 A01N63/00 A01N63/02 B08B17/02 C07K7/06 C07K7/08 C09D5/00F C09D5/14 C09D5/16C3K C09D5/16C7 C09D5/16R C09D7/12D4 C09D7/12M C09D7/12S C12Q1/34 C12Q1/44 C12Q1/61 D06M16/00B M08L89/00
US: 106/124.1 106/124.100S 106/15.05 106/15.050P 106/15.050S 106/18.32 106/18.320P 106/18.320P 106/18.320S 106/2 106/2P 106/4 106/4S 106/501.1 106/501.100S 134/26 134/26P 206/216 206/216S 206/524.1 206/524.100S 222/1 222/1S 424/404 424/409 424/422 424/422P 424/426 424/426P 424/78.09 424/94.2 424/94.200P 424/94.61 424/94.64 427/331 427/331S 427/352 427/352S 427/414 427/414P 428/116 428/116S 435/174 435/174S 435/18 435/183 435/183S 435/18P 435/196 435/196S 435/197 435/197S 435/198 435/198S 435/212 435/212S 435/213 435/213S 435/227 435/227S 435/264 435/264S 435/4 435/4S 442/93 442/93S 514/1.1 514/1.100P 514/12 514/16 514/17 514/18 514/2 514/2.4 514/2.400S 514/21.4 514/21.5 514/21.8 514/3.3 514/3.300P 514/3.300S 521/55 521/55P 523/122 523/122S 524/17 524/17S 524/590 525/54.1 525/54.100S 530/324 530/324S 530/326 530/326S 530/327 530/327S 530/329 530/329S 530/330 530/330S 530/331 530/331S 530/350 530/350S

PatBase - WO005007758_A2

WO 2005007758 PCT/US2004/021711

SEQUENCE LISTING

<110> Reactive Surfaces, Ltd.

<120> Antifungal Paints and Coatings

<130> RACT-30401

<140> 60/485,234
<141> 2003-07-03

<150> Unknown
<151> 2004-07-02

<160> 199

<170> Patentin version 3.1

<210> 1
<211> 6
<212> PRT
<213> peptide

<220>
<221> Misc_feature
<222> (1)..(10)
<223> X = anything

<400> 1

Xaa Xaa Xaa Xaa Arg Phe
1 5

<210> 2
<211> 6
<212> PRT
<213> peptide

<220>
<221> Misc_feature
<222> (1)..(10)
<223> X = anything

<400> 2

Xaa Xaa Xaa Xaa Phe His
1 5

<210> 3
<211> 6
<212> PRT
<213> peptide

<220>
<221> Misc_feature
<222> (1)..(10)
<223> X = anything

<400> 3

Xaa Xaa Xaa Xaa Lys Phe
1 5

1/97

Family:

Publication number	Publication date	Application number	Application date

AU2004257205 AA	20050127	AU20040257205	20040706
AU2004257205 BB	20101216	AU20040257205	20040706
AU2011201077 AA	20110407	AU20110201077	20110310
EP1644452 A2	20060412	EP20040756724	20040706
EP1644452 B1	20161214	EP20040756724	20040706
EP2431429 A2	20120321	EP20110168727	20040706
EP2431429 A3	20120627	EP20110168727	20040706
HK1083693 A1	20060707	HK20060104810	20060421
HK1083693 A3	20060707	HK20060104810	20060421
HK1083693 B	20180223	HK20060104810	20060421
HK1156652 A1	20120615	HK20110110948	20111013
HK1156652 A3	20120615	HK20110110948	20111013
IL173658 A0	20090211	IL20060173658	20060209
IL173658 A1	20120430	IL20040173658	20040706
IL218128 A0	20120329	IL20040218128	20040706
IL218129 A0	20120329	IL20120218129	20120215
IL218129 A1	20130930	IL20040218129	20040706
SG179021 A1	20120427	SG20120015939	20100915
US2005058689 AA	20050317	US20040884355	20040702
US2006141003 AA	20060629	US20060368086	20060303
US2009308277 AA	20091217	US20090543072	20090818
US2009308278 AA	20091217	US20090543172	20090818
US2009312232 AA	20091217	US20090543145	20090818
US2009312233 AA	20091217	US20090543160	20090818
US2009312234 AA	20091217	US20090543199	20090818
US2009312261 AA	20091217	US20090543187	20090818
US2009312267 AA	20091217	US20090543090	20090818
US2009312268 AA	20091217	US20090543117	20090818
US2009312269 AA	20091217	US20090543132	20090818
US2010210745 AA	20100819	US20100696651	20100129
US2010233146 AA	20100916	US20090474921	20090529
US2011070376 AA	20110324	US20100882563	20100915
US2011219982 AA	20110915	US20110089479	20110419
US2011224131 AA	20110915	US20110089459	20110419
US2011240064 AA	20111006	US20110069864	20110323
US2011250626 AA	20111013	US20110085061	20110412
US2011269672 AA	20111103	US20110173684	20110630
US2011319320 AA	20111229	US20110173243	20110630
US2012010128 AA	20120112	US20110186734	20110720
US2012010129 AA	20120112	US20110186794	20110720
US2012017802 AA	20120126	US20110232501	20110914
US2012024191 AA	20120202	US20110233088	20110915
US2012028884 AA	20120202	US20110232659	20110914
US2012028885 AA	20120202	US20110233195	20110915
US2012028886 AA	20120202	US20110233223	20110915
US2012097194 AA	20120426	US20110004279	20110111
US2014083324 AA	20140327	US20130093347	20131129
US2014196631 AA	20140717	US20140156007	20140115
US2015191607 AA	20150709	US20130097128	20131204
US7932230 BB	20110426	US20090543199	20090818
US7939500 BB	20110510	US20090543145	20090818
US8497248 BB	20130730	US20110089479	20110419
US8618066 BA	20131231	US20070865514	20071001
WO05007758 A2	20050127	WO2004US21711	20040706
WO05007758 A3	20050915	WO2004US21711	20040706
WO05007758 A8	20160317	WO2004US21711	20040706
WO11034931 A2	20110324	WO2010US48946	20100915
WO11034931 A3	20110811	WO2010US48946	20100915

Priority:

US20020409102P	20020909	US20030485234P	20030703	US20030655345	20030904
US20040884355	20040702	AU20040257205	20040706	EP20040756724	20040706
WO2004US21711	20040706	US20060368086	20060303	US20060827531P	20060929
US20070976676P	20071001	US20070865514	20071001	US20080057705P	20080530
US20080058025P	20080602	US20080243755	20081001	US20090148502P	20090130
US20090474921	20090529	WO2009US45692	20090529	US20090543072	20090818
US20090543172	20090818	US20090543145	20090818	US20090543160	20090818
US20090543199	20090818	US20090543187	20090818	US20090543090	20090818
US20090543117	20090818	US20090543132	20090818	US20090242485P	20090915
US20100293897P	20100111	US20100696651	20100129	US20100316504P	20100323
US20100322910P	20100412	US20100882563	20100915	WO2010US48946	20100915
US20110004279	20110111	AU20110201077	20110310	US20110069864	20110323
US20110085061	20110412	US20110089459	20110419	US20110089479	20110419
US20110173243	20110630	US20110173684	20110630	US20110186734	20110720
US20110186794	20110720	US20110232501	20110914	US20110232659	20110914
US20110233088	20110915	US20110233195	20110915	US20110233223	20110915
US20130093347	20131129	US20130097128	20131204	US20140156007	20140115

Probable Assignee: REACTIVE SURFACES LTD LLP

Assignee(s): (std): MCDANIEL C ; MCDANIEL C STEVEN ; MCDANIEL STEVEN C ; REACTIVE SURFACES LTD ; REACTIVE

SURFACES LTD LLP ; STEVEN MCDANIEL C ; REACTIVE SURFACE LTD ; RAWLINS JAMES W ; WALES MELINDA ; WILLIAMS ERIC B

Assignee(s): STEVEN C MCDANIEL ; C MCDANIEL ; C STEVEN MCDANIEL

Inventor(s): (std): MCDANIEL C S ; CARVAJAL JUAN CARLO ; WALES MELINDA E ; WILLIAMS ERIC ; RAWLINS JAMES ; CIPI PIRRO ; WALES MELINDA ; WILLIAMS ERIC B ; RAWLINS JAMES W ; BRAASCH DWAINE ; MCDANIEL C STEVEN ; MCDANIEL STEVEN C

Inventor(s): C STEVEN MCDANIEL ; STEVEN MCDANIEL ; MCDANIEL C

Agent(s): WRAYS; MARCHANT MICHAEL JOHN; ELLA CHEONG HONG KONG LTD; SPRUSON AND FERGUSON HONG KONG LTD; DEACONS; SANFORD TCOLB AND CO; C STEVEN MCDANIEL MCDANIEL AND ASSOCIATES PC; DAFFER MCDANIEL LLP; C STEVEN MCDANIEL C O DAFFER MCDANIEL LLP; RISSMAN HENDRICKS AND OLIVERIO LLP; NOVAK DRUCE CONNOLLY BOVE AND QUIGG LLP; MCDANIEL AND ASSOCIATES PC; MCDANIEL C STEVEN

Designated states: AE AG AL AM AO AT AU AZ BA BB BE BF BG BH BJ BR BW BY BZ CA CF CG CH CI CL CM CN CO CR CU CY CZ DE DK DM DO DZ EC EE EG ES FI FR GA GB GD GE GH GM GN GQ GR GT GW HN HR HU ID IE IL IN IS IT JP KE KG KM KN KP KR KZ LA LC LI LK LR LS LT LU LV LY MA MC MD ME MG MK ML MN MR MT MW MX MY MZ NA NE NG NI NL NO NZ OM PE PG PH PL PT RO RS RU SC SD SE SG SI SK SL SM SN ST SV SY SZ TD TG TH TJ TM TN TR TT TZ UA UG US UZ VC VN YU ZA ZM ZW

22) Family number: 30256711 (US2004024101A)

© PatBase

Title: SULFONATED ALIPHATIC-AROMATIC COPOLYETHERESTERS

Abstract: A sulfonated aliphatic-aromatic copolyetherester that comprises the polymerization product of 80.0 to 20.0 mole percent of an aromatic dicarboxylic acid or an ester thereof based on the total moles of dicarboxylic acid or ester thereof, 20.0 to 80.0 mole percent of an aliphatic dicarboxylic acid or an ester thereof based on the total moles of dicarboxylic acid or ester thereof, 0.1 to 10.0 mole percent of a sulfonate component, 99.9 to 91.0 mole percent of a first glycol selected from the group consisting of ethylene glycol, 1,3-propanediol and 1,4-butanediol based on the total moles of glycol, 0.1 to 4.0 mole percent of a poly(alkylene ether) glycol based on the total moles of glycol, 0 to 5.0 mole percent of an other glycol based on the total moles of glycol, and 0 to 5.0 mole percent of a polyfunctional branching agent.

Classifications:

International (IPC 8-9): B32B B32B27/06 B32B27/36 B65D65/40 B65D65/46 C08G C08G63/672 C08G63/688 C08G75/00 C08J C08J5/18 C08K3/00 C08L C08L101/00 C08L101/16 C08L67/02 C08L69/00 C09D C09D167/02 (Advanced/Invention);
C08K3/34 C08L3/02 C08L67/04 C08L77/12 (Advanced/Non-invention);
B32B27/06 B32B27/36 C08G63/00 C08G75/00 C08K3/00 C08L101/00 C08L67/00 C08L69/00 (Core/Invention)

International (IPC 1-7): B32B27/06 C08G63/00 C08G63/672 C08G63/688 C08J5/18 C08K3/00 C08K3/26 C08K3/34 C08L101/16 C08L67/02 C09D167/02

CPC: B32B5/18 B32B7/12 B32B27/08 B32B27/10 B32B27/20 B32B2305/30 B32B2307/516 B32B2307/518 B32B2317/12 B32B2439/60 B32B2439/62 B32B2439/70 B32B2553/00 B32B1/02 B32B2307/306 B32B2307/7163 B32B2405/00 B32B2439/00 B32B2457/04 B32B2559/00 B32B27/06 B32B27/36 C08G63/6886 C08K3/346 C08L67/02 C08L69/00 C08G63/672 C08J5/18 C08J2367/02 C08L3/02 C08L67/025 C08L67/04 C08L77/12 C09D167/025 C08K3/013

European: B32B27/06 B32B27/36 C08G63/672 C08G63/688D2 C08J5/18 C08L67/02 C08L67/02B C08L69/00 C09D167/02B M08J367/02 M08K3/00P5 M08K3/34B M08L3/02 M08L67/02 M08L67/02B M08L67/04 M08L69/00 M08L77/12

US: 523/124 524/425 524/425S 524/445 528/272 528/293 528/295 528/296

JP F-Term: 4J002 4J002/CF10 4J002/DA03 4J002/DD03 4J002/DE08 4J002/DE11 4J002/DE13 4J002/DE14 4J002/DE23 4J002/DG04 4J002/DG05 4J002/DH04 4J002/DJ01 4J002/DJ03 4J002/DJ04 4J002/DJ05 4J002/DL00 4J002/DM00 4J002/FA04 4J002/FA08 4J002/FA10 4J002/FD01 4J002/GF00 4J002/GG00 4J002/GH00 4J002/GK00 4J029 4J029/AA03 4J029/AB01 4J029/AB07 4J029/AC02 4J029/AE01 4J029/AE02 4J029/AE03 4J029/AE11 4J029/AE14 4J029/BF25 4J029/CA01 4J029/CA02 4J029/CA03 4J029/CA04 4J029/CA05 4J029/CA06 4J029/CA09 4J029/CB05 4J029/CB06 4J029/CB11 4J029/CC05 4J029/CC06 4J029/CE04 4J029/CF13 4J029/CH02 4J029/DB06 4J029/DB13 4J029/FC35 4J029/FC36 4J029/HA01 4J029/HB01 4J029/JA09 4J029/JB17 4J029/JF03 4J029/JF47 4J029/JF54 4J029/KE08 4J200 4J200/AA01 4J200/AA04 4J200/AA14 4J200/AA27 4J200/BA19 4J200/CA01 4J200/CA02 4J200/CA06 4J200/CA09 4J200/DA17 4J200/DA20 4J200/EA01 3E086 3E086/AD02 3E086/AD04 3E086/AD05 3E086/AD06 3E086/AD07 3E086/AD17 3E086/AD18 3E086/BA04 3E086/BA14 3E086/BA15 3E086/BA16 3E086/BA33 3E086/BA35 3E086/BB90 3E086/DA08 4J002/AB04 4J002/AH00 4J002/CF03 4J002/CF14 4J002/CF27 4J002/CH05 4J002/CL08 4J002/DJ00 4J029/AE18 4J029/BA01 4J029/BA02 4J029/BA03 4J029/BA04 4J029/BA05 4J029/BD07 4J029/BD10 4J029/BF09 4J029/BF18 4J029/BF26 4J029/CF14 4J029/DB02 4J029/DB07 4J029/FC03 4J029/FC07 4J029/FC08 4J029/FC38 4J029/HB03 4J029/HB06 4J029/KE05

JP F-Index: C08G63/688/ZBP C08K3/00 C08K3/013 C08L101/16 C08L67/02 B65D65/40/BRQ/D B65D65/46/BSF C08L101/00

JP Facet: BRQ BSF ZBP

Family:

Publication number	Publication date	Application number	Application date
AU2003257025 AA	20040216	AU20030257025	20030729
AU2003257025 AH	20040216	AU20030257025	20030729
AU2003284977 AA	20040513	AU20030284977	20031022
AU2003284977 AH	20040513	AU20030284977	20031022
CN100558784 C	20091111	CN20038023218	20030729
CN1684996 A	20051019	CN20038023218	20030729
CN1708532 A	20051214	CN200380102106	20031022
CN1708532 B	20100526	CN200380102106	20031022
DE60303390 D1	20060413	DE20036003390	20030729
DE60303390 D1	20060413	DE20036003390T	20030729
DE60303390 T2	20060914	DE20036003390T	20030729
EP1539853 A2	20050615	EP20030772094	20030729
EP1539853 B1	20060125	EP20030772094	20030729
EP1554331 A2	20050720	EP20030779298	20031022
HK1084407 A1	20060728	HK20060104607	20060418
HK1084407 A3	20060728	HK20060104607	20060418
HK1086580 A1	20060922	HK20060106455	20060606
HK1086580 A3	20060922	HK20060106455	20060606
JP2005534744 T2	20051117	JP20040524201T	20030729
JP2006503963 T2	20060202	JP20040547195T	20031022
JP4807952 B2	20111102	JP20040547195T	20031022

JP5345749 B2	20131120	JP20040524201T	20030729
US2004024101 AA	20040205	US20020209369	20020730
US2004024102 AA	20040205	US20020279391	20021024
US7625994 BB	20091201	US20020209369	20020730
WO04011524 A2	20040205	WO2003US23818	20030729
WO04011524 A3	20040318	WO2003US23818	20030729
WO04037888 A2	20040506	WO2003US34004	20031022
WO04037888 A3	20040624	WO2003US34004	20031022

Priority:

US20020209369 20020730 US20020279391 20021024 WO2003US23818 20030729
WO2003US34004 20031022 WO2003US34004 20031022

Probable Assignee: EI DU PONT DE NEMOURS AND CO

Assignee(s): (std): DU PONT ; EIDU PONT DE NEMOURS AND CO

Assignee(s): HAYES RICHARD ALLEN ; PIKE LORI J ; SCHNEIDER JENNIFIER M ; E I DU PONT DE NEMOURS AND CO ; E I DU PONT DE NEMOURS AND CO WILMINGTON ; E I DU PONT DE NEMOURS AND COMPANY ; E I DUPONT DE NEMOURS AND CO ; EI DU PONT DE NEMOURS AND CO ; EI DUPONT DE NEMOURS AND CO

Inventor(s): (std): HAYES RICHARD ALLEN ; PIKE LORI J ; SCHNEIDER JENNIFIER M ; SCHNEIDER JENNIFER M ; ALLEN HAYES RICHARD ; HAYES RICHARD ALLEN PIKE LORI ; HAYES ALLEN

Inventor(s): RICHARD ALLEN HAYES ; HAYES RICHARD ALLEN PIKE LORI J ; LORI J PIKE ; JENNIFER M SCHNEIDER

Agent(s): CHINA PATENT AGENT HK LTD; YAMASAKI KAZUO; OGAWA NOBUO; HAKODA ATSUSHI; KUMAKURA YOSHIO; ASAI KENJI; HIRAYAMA KOJI

Designated states: AE AG AL AM AT AU AZ BA BB BE BF BG BJ BR BY BZ CA CF CG CH CI CM CN CO CR CU CY CZ DE DK DM DZ EC EE ES FI FR GA GB GD GE GH GM GN GQ GR GW HR HU ID IE IL IN IS IT JP KE KG KP KR KZ LC LK LR LS LT LU LV MA MC MD MG MK ML MN MR MW MX MZ NE NI NL NO NZ OM PG PH PL PT RO RU SC SD SE SG SI SK SL SN SY SZ TD TG TJ TM TN TR TT TZ UA UG UZ VC VN YU ZA ZM ZW

23) Family number: 44814736 (US2012045826A)

© PatBase

Title: KITS AND DEVICES FOR DETECTING ANALYTES

Abstract: The invention provides devices that improve tests for detecting specific cellular, viral, and molecular targets in clinical, industrial, or environmental samples. The invention permits efficient detection of individual microscopic targets at low magnification for highly sensitive testing. The invention does not require washing steps and thus allows sensitive and specific detection while simplifying manual operation and lowering costs and complexity in automated operation. In short, the invention provides devices that can deliver rapid, accurate, and quantitative, easy-to-use, and cost-effective tests.

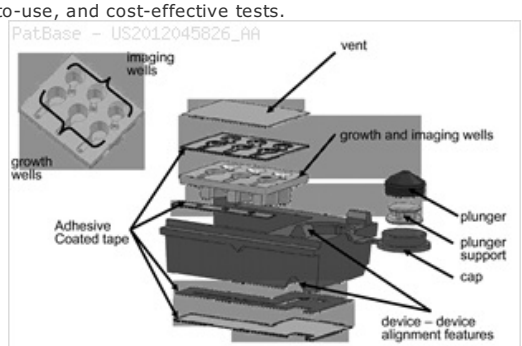

Modular assembly of a device where sample is metered by actuation of a plunger integrated into the cap. (Example 6)

Classifications:

International (IPC 8-9): A61B5/145 A61B5/15 A61B5/157 B01L3/00 B01L7/00 B01L9/00 C12M1/00 C12M1/34 C12M1/42 C12Q1/04 C12Q1/68 C12Q1/70 C40B60/12 G01N21/00 G01N21/03 G01N21/11 G01N21/13 G01N21/25 G01N21/27 G01N21/64 G01N21/75 G01N21/78 G01N33/48 G01N33/483 G01N33/50 G01N33/53 G01N33/542 G01N33/543 G01N33/553 G01N33/566 G01N33/569 G01N33/58 G01N33/74 G01N35/00 G01N35/02 G01N37/00 (Advanced/Invention); A61B5/117 A61B5/145 A61B5/151 B01L7/00 B01L9/00 C12Q1/02 C12Q1/04 G01N21/63 G01N33/569 (Advanced/Non-invention); C12M1/34 C12Q1/70 G01N33/53 (Core/Invention)

CPC: B01L3/502715 A61B5/150022 A61B5/150213 A61B5/150221 A61B5/150274 A61B5/150305 A61B5/150343 A61B5/150351 A61B5/150412 A61B5/150503 A61B5/150786 A61B5/151 A61B5/15113 A61B5/15186 A61B5/157 B01L3/502761 B01L3/5029 B01L3/5082 B01L7/00 B01L9/52 B01L2200/025 B01L2200/026 B01L2200/027 B01L2200/0605 B01L2200/10 B01L2300/022 B01L2300/042 B01L2300/043 B01L2300/046 B01L2300/048 B01L2300/0654 B01L2300/0681 B01L2300/0864 B01L2400/0406 B01L2400/0409 B01L2400/0415 B01L2400/043 B01L2400/0457 B01L2400/0472 B01L2400/0481 B01L2400/0677 B01L2400/0683 G01N21/03 G01N21/253 G01N21/6428 G01N21/6452 G01N21/6458 G01N33/54373 G01N2021/0325 G01N2021/0346 A61B5/117

European: A61B5/157 B01L3/5027B B01L3/5027H B01L3/5029 B01L3/5082 G01N21/03 G01N21/25B2 G01N21/64P2 G01N21/64P4C G01N33/543K2 K61B5/117 K61B5/151 L01L200/02C L01L200/02D L01L200/02D2 L01L200/06A L01L200/10 L01L300/02A2 L01L300/04A2 L01L300/04A4 L01L300/04B L01L300/04B4 L01L300/06B6 L01L300/06D L01L300/08E2 L01L400/04F16 L01L400/04F2 L01L400/04F26 L01L400/04F4 L01L400/04F6 L01L400/04F8 L01L400/04M4 L01L400/06P L01L400/06P2 L01L7/00 L01L9/52 S01N21/03F S01N21/64H

US: 422/547 422/547S 422/69 422/69S 422/82.05 422/82.050S 435/288.7 435/288.700P 435/5 435/5P 435/6.15 435/6.150S 435/7.32 435/7.320S 436/501 436/501S 506/39 506/39P

JP F-Term: 2G043 2G043/BA16 2G043/BA17 2G043/CA03 2G043/DA01 2G043/DA05 2G043/DA08 2G043/EA01 2G043/EA02 2G043/EA06 2G043/EA13 2G043/EA14 2G043/FA01 2G043/GA07 2G043/GB02 2G043/GB07 2G043/GB13 2G043/HA01 2G043/KA01 2G043/KA02 2G043/KA03 2G043/LA01 2G043/LA02 2G043/LA03 2G043/MA01 2G043/NA11 2G045 2G045/BB04 2G045/FA26 2G045/FA36 2G045/FB12 2G045/HA06 2G045/HA14 2G058 4B029 4B029/AA07 4B029/AA23 4B029/BB01 4B029/CC01 4B029/CC02 4B029/FA02 4B029/FA10 4B029/FA12 4B029/FA15 4B063 4B063/QA01 4B063/QA18 4B063/QQ05 4B063/QQ21 4B063/QQ43 4B063/QQ79 4B063/QQ96 4B063/QR48 4B063/QR55 4B063/QR62 4B063/QS15 4B063/QS25 4B063/QS33 4B063/QS34 4B063/QX02 2G045/AA28 2G045/BB20 2G045/BB50 2G045/BB51 2G045/CB21 2G045/DA13 2G045/DA56 2G045/DA60 2G045/FA11 2G045/FB03 2G045/FB07 2G045/GB04 2G045/GC15 4B063/QQ03 4B063/QQ06 4B063/QQ42 4B063/QR32 4B063/QR68 4B063/QR69 4B063/QR83 4B063/QS03 4B063/QS28 4B063/QS32 4B063/QS36 4B063/QS39 4B063/QX01 2G043/AA03 2G043/DA02 2G043/DA06 2G043/JA02 2G043/KA09 2G045/FA19 2G045/JA01 2G045/JA07 2G045/JA08 2G045/JA20 2G054 2G054/AA06 2G054/CA22 2G054/CA23 2G054/CB03 2G054/CE02 2G054/EA01 2G054/EA02 2G054/EA03 2G054/EA05 2G054/FA06 2G054/FA09 2G054/FA17 2G054/FA19 2G054/FA32 2G054/FA33 2G054/GA03 2G054/GA04 2G054/GA05 2G059 2G059/AA05 2G059/CC16 2G059/DD03 2G059/DD12 2G059/DD13 2G059/DD16 2G059/GG02 2G059/JJ02 2G059/JJ11 2G059/KK04 2G059/PP04 2G059/PP06 4B029/AA27 2G054/FA01 2G054/FA02 2G054/FA34 4B029/AA02 4B029/AA08 4B029/AA12 4B029/GA03 4B029/GB01 4B029/GB06

JP F-Index: C12M1/34 C12Q1/02 G01N21/64/F G01N33/483/C G01N33/543/541/A G01N33/543/575 G01N33/553 G01N33/566 G01N37/00/101 C12Q1/04 G01N33/48/P G01N33/50/P G01N33/53/E G01N33/542/A G01N33/542/Z G01N33/569/E G01N33/569/F G01N33/58/Z C12M1/34/B C12M1/42 G01N21/27/A G01N21/78/C C12M1/00/A G01N21/64/G

Family:

Publication number	Publication date	Application number	Application date
AU2009296526 AA	20100401	AU20090296526	20090924
AU2009296526 BB	20151119	AU20090296526	20090924
AU2009296528 AA	20100401	AU20090296528	20090924
AU2009296662 AA	20100401	AU20090296662	20090924
AU2009296662 BB	20160811	AU20090296662	20090924
AU2015243006 AA	20151105	AU20150243006	20151014
AU2015243006 BB	20170622	AU20150243006	20151014
CA2738264 AA	20110323	CA20092738264	20090924
CA2738264 C	20181120	CA20092738264	20090924
CA2738287 AA	20110323	CA20092738287	20090924
CA2738287 C	20190625	CA20092738287	20090924
CA2738317 AA	20110323	CA20092738317	20090924
CN102224260 A	20111019	CN200980146500	20090924
CN102224260 B	20151125	CN200980146500	20090924
CN102224410 A	20111019	CN200980146575	20090924
CN102224410 B	20170208	CN200980146575	20090924
CN102239245 A	20111109	CN200980146571	20090924
CN107121396 A	20170901	CN201710112268	20090924
DE602009020878 D1	20140213	DE200960020878T	20090924
EP2340300 A1	20110706	EP20090816871	20090924
EP2340300 A4	20120411	EP20090816871	20090924
EP2340300 B1	20131218	EP20090816871	20090924
EP2340301 A1	20110706	EP20090816873	20090924
EP2340301 A4	20120509	EP20090816873	20090924
EP2344679 A1	20110720	EP20090816857	20090924
EP2344679 A4	20120425	EP20090816857	20090924
EP2344679 B1	20180523	EP20090816857	20090924
JP2012503779 T2	20120209	JP20110529226T	20090924
JP2012503780 T2	20120209	JP20110529234T	20090924
JP2012503781 T2	20120209	JP20110529235T	20090924
JP2016164561 A2	20160908	JP20160045475	20160309
JP5685538 B2	20150318	JP20110529226T	20090924
JP5699083 B2	20150408	JP20110529234T	20090924
JP6015889 B2	20161026	JP20110529235T	20090924
US2012045826 AA	20120223	US20090120504	20090924
US2012046203 AA	20120223	US20090120533	20090924
US2012149007 AA	20120614	US20090120516	20090924
US9643180 BB	20170509	US20090120516	20090924
WO10036808 A1	20100401	WO2009US58237	20090924
WO10036827 A1	20100401	WO2009US58270	20090924
WO10036827 A8	20110818	WO2009US58270	20090924
WO10036829 A1	20100401	WO2009US58274	20090924

Priority:

US20080099830P	20080924	AU20090296528	20090924	EP20090816871	20090924
JP20110529235T	20090924	CN200980146571	20090924	WO2009US58270	20090924
WO2009US58237	20090924	WO2009US58274	20090924	US20090120504	20090924
US20090120533	20090924	US20090120516	20090924	AU20150243006	20151014
JP20160045475	20160309				

Probable Assignee: FIRST LIGHT BIOSCIENCES INC

Assignee(s): (std): ABRAMS EZRA ; BARRA MATTHEW ; BLANTER BORIS ; CONNELLY BRIAN ; DEHART DAMON ; CONNOLLY BRIAN ; SIEK GORDON ; SHINEFELD LISA ; GITE SADANAND ; STRAUS HOLDINGS INC ; STRAUS DON ; GERVASIO PAUL ; FIRST LIGHT BIOSCIENCES INC ; YANTZ GREG ; WALSH BRUCE

Assignee(s): STRAUS HOLDINGS INC BEDFORD

Inventor(s): (std): EZRA ABRAMS ; SADANAND GITE ; LISA SHINEFELD ; CONNOLLY BRIAN ; PAUL GERVASIO ; BRIAN CONNELLY ; MATTHEW BARRA ; BORIS BLANTER ; BRUCE WALSH ; DEHART DAMON ; BLANTER BORIS ; GERVASIO PAUL ; WALSH BRUCE ; BARRA MATTHEW ; CONNELLY BRIAN ; DAMON DEHART ; GREG YANTZ ; GORDON SIEK ; DON STRAUS ; SIEK GORDON ; SHINEFELD LISA ; ABRAMS EZRA ; GITE SADANAND ; STRAUS DON ; YANTZ GREG

Inventor(s): STRAUS DON CAMBRIDGE ; ABRAMS EZRA NEWTON ; SIEK GORDON SOMERVILLE ; GITE SADANAND ARLINGTON ; YANTZ GREG SOMERVILLE ; SHINEFELD LISA LEXINGTON

Agent(s): GRIFFITH HACK; GOWLING LAFLEUR HENDERSON LLP; GOWLING WLG CANADA LLP; PATENTANWAELTE ISENBRUCK BOESL HOERSCHLER LLP; LAHRTZ FRITZ; KAWAMOTO KAZUYA; SHIMIZU HATSUSHI; OSAKABE SUGURU; CLARK AND ELBING LLP; CLARK PAUL T ET AL

Designated states: AE AG AL AM AO AT AU AZ BA BB BE BF BG BH BJ BR BW BY BZ CA CF CG CH CI CL CM CN CO CR CU CY CZ DE DK DM DO DZ EC EE EG ES FI FR GA GB GD GE GH GM GN GQ GR GT GW HN HR HU ID IE IL IN IS IT JP KE KG KM KN KP KR KZ LA LC LI LK LR LS LT LU LV LY MA MC MD ME MG MK ML MN MR MT MW MX MY MZ NA NE NG NI NL NO NZ OM PE PG PH PL PT RO RS RU SC SD SE SG SI SK SL SM SN ST SV SY SZ TD TG TJ TM TN TR TT TZ UA UG US UZ VC VN ZA ZM ZW

24) Family number: 33611796 (US2009206084A)

© PatBase

Title: PROGRAMMABLE LIQUID CONTAINERS

Abstract: The invention relates to liquid containers comprising a plurality of sealed additive chambers in communication with a

vessel tillable with a liquid. The additive chambers comprise independently selected additives that may be added to a liquid in the container at the option of the user. The user can manually open the additive chambers of their choice and release the additive into a liquid in the vessel without destroying the integrity of the container. In this manner, the liquid containers are programmable by the users and various aspects of the liquid in the container, such as color and/or flavor, is controlled by the user.

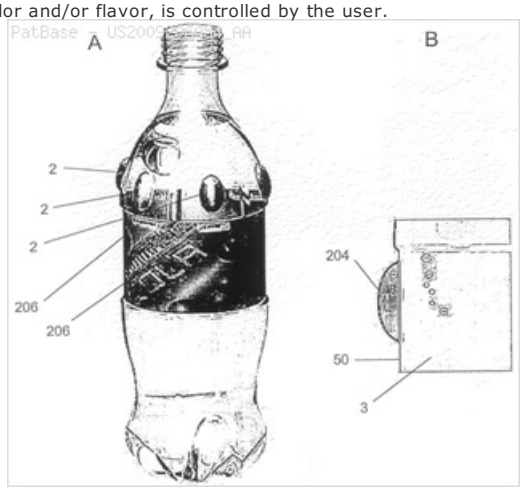

Classifications:
International (IPC 8-9): A21C14/00 A21D10/02 A23C13/12 A23F3/14 A23F5/00 A23L1/221 A23L1/30 A23L2/40 A61J3/00 B65B29/02 B65D23/12 B65D25/02 B65D25/08 B65D25/20 B65D77/08 B65D81/24 B65D81/26 B65D81/28 B65D81/32 B65D85/00 B65D85/72 B65D85/76 C11B5/00 (Advanced/Invention);
A23L1/03 A23L2/52 (Advanced/Non-invention);
A21C14/00 A21D10/00 A23C13/00 A23F3/06 A23F5/00 A23L1/221 A23L1/30 A23L2/40 A61J3/00 B65B29/00 B65D25/02 B65D25/20 B65D77/00 B65D81/26 B65D81/32 B65D85/00 B65D85/72 C11B5/00 (Core/Invention)
International (IPC 1-7): A21C14/00
CPC: A61J2200/40 A61J2200/50 A61J2200/72 A61J2205/30 A61J1/05 A61J2205/20 B65D25/08 B65D81/32 B65D81/3205
European: B65D81/32B K61J1/05 K61J205/20 K61J205/50
US: 156/145 156/145S 206/0.5 206/213.1 206/219 206/221 206/222 220/500 426/541 426/541S 426/586 426/586S 426/591 426/591S 426/594 426/594S 426/597 426/597S 426/648 426/648S 426/650 426/650S
JP F-Term: 3E013 3E013/AA09 3E013/AB02 3E013/AB05 3E013/AB06 3E013/AB07 3E013/AB08 3E013/AB10 3E013/AC01 3E013/AC16 3E013/AC17 3E013/AD04 3E013/AD07 3E013/AE01 3E013/AE03 3E013/AE06 3E013/AE12 3E013/AF02 3E013/AF16 3E013/AF17 3E013/AF25 3E013/AF26 3E013/AF32 3E013/AF34 3E013/AF36 3E013/AF38 3E062 3E062/AA09 3E062/AB01 3E062/AB02 3E062/BA09 3E062/BB03 3E062/BB06 3E062/BB09 3E067 3E067/AA03 3E067/AB26 3E067/AC06 3E067/BA03 3E067/BB14 3E067/FA01 4C047 4C047/AA07 4C047/AA13 4C047/BB13 4C047/BB16 4C047/BB17 4C047/BB20 4C047/CC04 4C047/DD12 4C047/HH04 4C047/JJ18
JP F-Index: A61J1/20/314/B A61J3/00/314/B B65D25/20/B B65D77/08/Z B65D81/32/H B65D81/32/Q B65D81/32/U B65D81/32/V
Locarno class: 20/65

Family:

Publication number	Publication date	Application number	Application date
AT532722 E	20111115	AT20060739587T	20060324
AU2006241422 AA	20061109	AU20060241422	20060324
BRPI0607660 A2	20090922	BR2006PI07660	20060324
CA2606995 AA	20071026	CA20062606995	20060324
CN101247727 A	20080820	CN200680023902	20060324
DE602006025713 D1	20120126	DE200660025713T	20060324
EP1876901 A2	20080116	EP20060739587	20060324
EP1876901 A4	20090429	EP20060739587	20060324
EP1876901 B1	20111109	EP20060739587	20060324
IN05464CN2007 A	20080328	IN2007CN05464	20071128
JP2008539142 T2	20081113	JP20080508859T	20060324
US2009206084 AA	20090820	US20060913018	20060324
US2012298532 AA	20121129	US20120539733	20120702
US2014346063 AA	20141127	US20140452089	20140805
WO06118697 A2	20061109	WO2006US10878	20060324
WO06118697 A3	20070125	WO2006US10878	20060324

Priority:

US20050594704 20050429 US20050594704P 20050429 EP20060739587 20060324
US20060913018 20060324 WO2006US10878 20060324 US20080913018 20081105
US20120539733 20120702 US20140452089 20140805

Probable Assignee: IPIFINI INC

Assignee(s): (std): IPIFINI ; IPIFINI INC ; MARKS ANDREW S ; WACHLER GLENN ; WOOLF TOD M ; WOOLF SCOTT

Assignee(s): IPIFINI INC SUDBURY

Inventor(s): (std): GLENN WACHLER ; MARKS ANDREW ; MARKS ANDREW S ; SCOTT WOOLF ; WACHLER GLENN ; WOOLF SCOTT ; WOOLF TOD ; WOOLF TOD M

Inventor(s): WOOLF TOD M SUDBURY ; WOOLF SCOTT WEST BLOOMFIELD ; ANDREW S MARKS ; WACHLER GLENN BOCA RATON ; TOD M WOOLF ; MARKS ANDREW S WAYLAND

Agent(s): SHELSTON IP; SHELSTON IP PTY LTD; GOWLING LAFLEUR HENDERSON LLP; WINTER BRANDL FUERNISS HUEBNER ROESS KAISER POLTE PARTNERSCHAFT MBB; MATHYS AND SQUIRE; MATHYS AND SQUIRE LLP; LAHIVE AND COCKFIELD LLP FLOOR 30 SUITE 3000

Designated states: AE AG AL AM AT AU AZ BA BB BE BF BG BJ BR BW BY BZ CA CF CG CH CI CM CN CO CR CU CY CZ DE DK DM DZ EC EE EG ES FI FR GA GB GD GE GH GM GN GQ GR GW HR HU ID IE IL IN IS IT JP KE KG KM KN KP KR KZ LC LI LK LR LS LT LU LV LY MA MC MD MG MK ML MN MR MW MX MZ NA NE NG NI NL NO NZ OM PG PH PL PT RO RU SC SD SE SG SI SK SL SM SN SY SZ TD TG TJ TM TN TR TT TZ UA UG US UZ VC VN YU ZA ZM ZW

25) Family number: 31779817 (US2003224090A)

© PatBase

Title: SNACKS OF ORALLY SOLUBLE EDIBLE FILMS

Abstract: Various embodiments of snacks of orally soluble edible films are disclosed. The snacks may include one or more layers of film that is orally soluble and disintegrates quickly upon placement in a human mouth without leaving substantial residue that can be felt by the human tongue or which needs to be swallowed or ejected from the mouth.

Classifications:
International (IPC 8-9): A23G3/00 A23G3/36 A23G3/50 A23G3/54 A23L1/00 A23L1/22 A61K9/00 A63B37/08 A63B43/00 A63H33/04 A63H33/28 B29C44/02 B32B27/36 B41M5/035 B43K23/008 B43K5/00 B43M99/00 B65D65/46 C08J9/00 C08J9/26
C08K3/00 (Advanced/Invention);
A63B37/08 (Advanced/Non-invention);
A23G3/00 A23G3/34 A23L1/00 A23L1/22 A61K9/00 A63B37/02 A63B43/00 A63H33/04 A63H33/28 B29C44/02 B32B27/36 B41M5/035 B43K23/00 B43K5/00 B43M99/00 B65D65/46 C08J9/00
C08K3/00 (Core/Invention);
A63B37/02 (Core/Non-invention)
International (IPC 1-7): A01K1/00 A23G3/00 A23G3/30 A23K1/175 A23L1/00 A23L1/30 A46B5/01 A46B5/02 A61K9/68 A63B37/08 B01F17/02 B29C44/02 B32B3/20 B41M5/035 B41M5/38 B65D1/00 C08J3/00 C08J9/00 C08K3/00 C08L29/04 F16L1/00
CPC: A23G3/36 A23G3/368 A23G3/50 A23G3/54 A23P10/30 A23P20/20 A23V2002/00 A61K9/0056 A63B37/08 A63B43/008 A63B2037/085 A63B2208/12 B32B27/36 B43K5/005 B43K23/008 C08J2201/0444 A23G1/52 A23G3/0065 Y10T428/13 A63H33/04 A63H33/28 B41M5/0355 B43M99/006 C08J9/26 Y10S428/91 Y10T428/1352 Y10T428/24744 Y10T428/2861 Y10T428/31786 A23L27/79 B65D65/463
European: A23G3/36 A23G3/36M4 A23G3/50 A23G3/54 A23L1/00P4 A23L1/00P8E A23L1/22B10 A61K9/00M18B A63B37/08 A63B43/00V A63H33/04 A63H33/28 B32B27/36 B41M5/035C B43K23/008 B43K5/00G B43M99/00B2C B65D65/46B C08J9/26 K23V2/00 K63B208/12 K63B37/08L M08J201/0444
US: 264/101 264/102 264/49 264/5 264/50 264/51 264/54 401/6 424/440 426/534 426/618 426/72 426/74 426/89 428/188 428/34.1 428/35.7 428/355RA 428/480 428/910 446/117 446/267 446/385 473/594 503/227 516/14 516/18 521/79 521/82 524/270 524/503 524/515 524/58

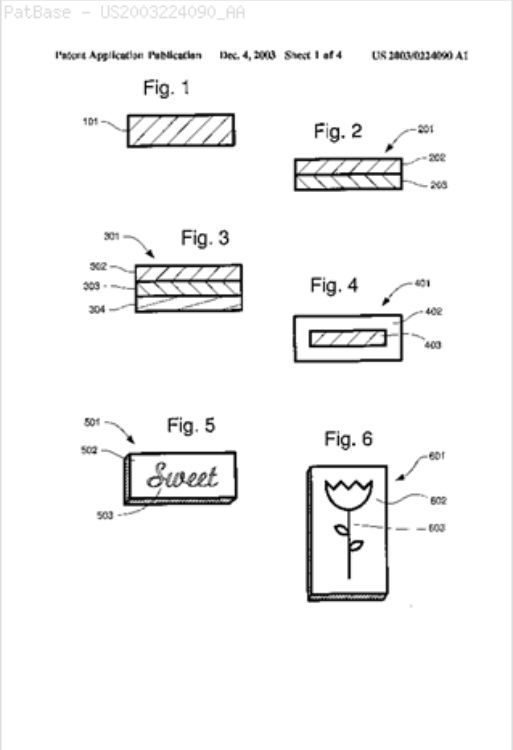

Family:

Publication number	Publication date	Application number	Application date
AU2003297428 AA	20040722	AU20030297428	20031219
AU2003297428 AH	20040722	AU20030297428	20031219
US2003224090 AA	20031204	US20020325721	20021220
US2003232177 AA	20031218	US20030364923	20030211
US2003234462 AA	20031225	US20030364921	20030211
US2003235453 AA	20031225	US20030364924	20030211
US2003235662 AA	20031225	US20030364900	20030211
US2003236313 AA	20031225	US20030364903	20030211
US2003236339 AA	20031225	US20030364912	20030211
US2004002560 AA	20040101	US20030364931	20030211
US2004009875 AA	20040115	US20030364902	20030211
US2004048018 AA	20040311	US20030364918	20030211
US2004247649 AA	20041209	US20040845597	20040512
US2004247744 AA	20041209	US20040845492	20040512
US2004247746 AA	20041209	US20040845490	20040513
US2005003048 AA	20050106	US20040845596	20040512
US2005008735 AA	20050113	US20040884863	20040702
US2005013902 AA	20050120	US20040884186	20040702
US2005074525 AA	20050407	US20040934335	20040902
US2005074526 AA	20050407	US20040934336	20040902
US2005100639 AA	20050512	US20040934339	20040902
US2005100640 AA	20050512	US20040948111	20040923
US2005100647 AA	20050512	US20040934793	20040902
US2005100648 AA	20050512	US20040934948	20040902
US2005100651 AA	20050512	US20040934794	20040902
US6835015 BB	20041228	US20030364924	20030211
US6890883 BB	20050510	US20030364902	20030211
US6905431 BB	20050614	US20030364900	20030211
US6943198 BB	20050913	US20030364912	20030211
US7101247 BB	20060905	US20030364931	20030211
US7138079 BB	20061121	US20030364903	20030211
WO04057985 A2	20040715	WO2003US40807	20031219
WO04057985 A3	20041014	WO2003US40807	20031219

Priority:

US20020356279P	20020211	US20020368821P	20020401	US20020325721	20021220
US20030364900	20030211	US20030364903	20030211	US20030364912	20030211
US20030364902	20030211	US20030364918	20030211	US20030364921	20030211
US20030364924	20030211	US20030364931	20030211	US20030364923	20030211
US20030469703P	20030512	US20030484435P	20030702	US20030507346P	20030930
WO2003US40807	20031219	US20040845596	20040512	US20040845492	20040512
US20040845597	20040512	US20040845490	20040513	US20040884863	20040702
US20040884186	20040702	US20040934794	20040902	US20040934948	20040902
US20040934793	20040902	US20040934339	20040902	US20040934336	20040902
US20040934335	20040902	US20040948111	20040923		

Probable Assignee: EDIZONE LLC
Assignee(s): (std): EDIZONE LC ; PEARCE TERRY V ; PEARCE TONY M
Assignee(s): TNT HOLDINGS LLC ; EDIZONE LLC
Inventor(s): (std): PEARCE TONY M ; PEARCE TERRY V
Inventor(s): PEARCE TERRY ; PEARCE TONY ; TONY M PEARCE ; TERRY V PEARCE
Agent(s): PARSONS BEHLE AND LATIMER SUITE 1800; PARSONS BEHLE AND LATIMER; PARSONS BEHLE AND LATIMER, SUITE 1800; MCCARTHY DANIEL P; DANIEL P; DANIEL
Designated states: AE AG AL AM AT AU AZ BA BB BE BF BG BJ BR BW BY BZ CA CF CG CH CI CM CN CO CR CU CY CZ DE DK DM DZ EC EE EG ES FI FR GA GB GD GE GH GM GN GQ GR GW HR HU ID IE IL IN IS IT JP KE KG KP KR KZ LC LK LR LS LT LU LV MA MC MD MG MK ML MN MR MW MX MZ NE NI NL NO NZ OM PG PH PL PT RO RU SC SD SE SG SI SK SL SN SY SZ TD TG TJ TM TN TR TT TZ UA UG US UZ VC VN YU ZA ZM ZW

26) Family number: 51596827 (WO12098248A2)

© PatBase

Title: AUTOMATED UNIT-DOSE SYSTEM FOR THE PERSONALISED DISPENSING OF DRUGS

Abstract: The invention relates to a unit dose of a drug, comprising: a cavity including a recess in which the drug is housed; a card to which the cavity is secured, said card being provided with a weakening slit located in the recess; and dose-identification data provided on the card.

Classifications:
International (IPC 8-9): A61J1/03 A61J7/00 B65B15/00 B65B61/26 B65C1/00 B65D75/32 G06F19/00 G07F11/62 (Advanced/Invention)
CPC: B65D75/325 A61J1/035 G06F19/30 G06F19/3462 G07F11/62
European: A61J1/03B A61J7/00F G06F19/34L1 K61J205/30 K61J205/60

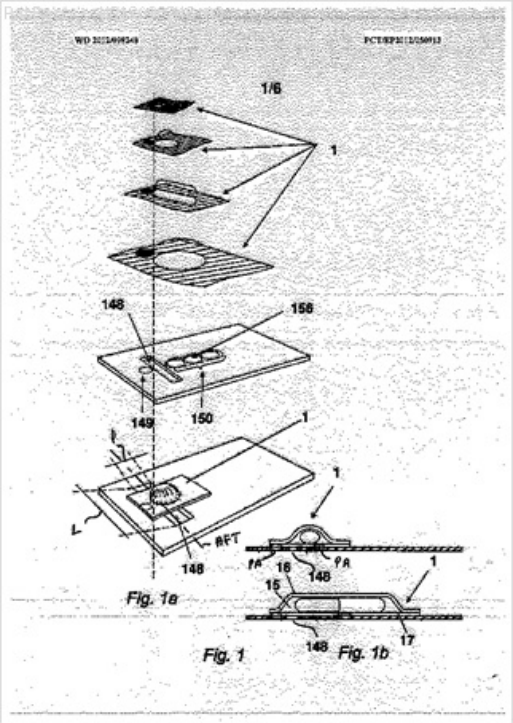

Family:

Publication number	Publication date	Application number	Application date
DE602012009749 D1	20151008	DE201260009749T	20120120
EP2665460 A2	20131127	EP20120702464	20120120
EP2665460 B1	20150819	EP20120702464	20120120
FR2970645 A1	20120727	FR20110050503	20110121
FR2970645 B1	20140328	FR20110050503	20110121
WO12098248 A2	20120726	WO2012EP50913	20120120
WO12098248 A3	20121004	WO2012EP50913	20120120

Priority:
FR20110050503 20110121 EP20120702464 20120120 WO2012EP50913 20120120

Probable Assignee: ETHILOG
Assignee(s): (std): DEWULF STEFAAN ; ETHILOG ; ETHILOG SAS ; SHAW HENRY
Inventor(s): (std): SHAW HENRY ANWYL ; DEWULF STEFAAN ; SHAW HENRY
Inventor(s): STEFAAN DEWULF ; HENRY ANWYL SHAW
Agent(s): LEBKIRI ALEXANDRE; CABINET CAMUS LEBKIRI
Designated states: AE AG AL AM AO AT AU AZ BA BB BE BF BG BH BJ BR BW BY BZ CA CF CG CH CI CL CM CN CO CR CU CY CZ DE DK DM DO DZ EC EE EG ES FI FR GA GB GD GE GH GM GN GQ GR GT GW HN HR HU ID IE IL IN IS IT JP KE KG KM KN KP KR KZ LA LC LI LK LR LS LT LU LV LY MA MC MD ME MG MK ML MN MR MT MW MX MY MZ NA NE NG NI NL NO NZ OM PE PG PH PL PT QA RO RS RU RW SC SD SE SG SI SK SL SM SN ST SV SY SZ TD TG TH TJ TM TN TR TT TZ UA UG US UZ VC VN ZA ZM ZW

27) Family number: 43952853 (US2009286295A) © PatBase

Title: PROCESSING BIOMASS

Abstract: Biomass (e.g., plant biomass, animal biomass, and municipal waste biomass) is processed to produce useful products, such as fuels. For example, systems can use feedstock materials, such as cellulosic and/or lignocellulosic materials, to produce ethanol and/or butanol, e.g., by fermentation.

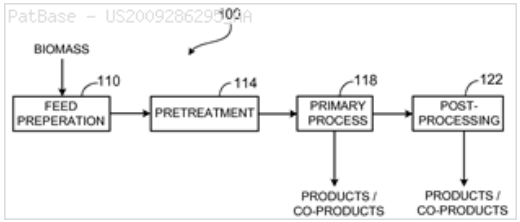

Classifications:
International (IPC 8-9): A01N63/00 B01F1/00 C07H3/00 C07H3/02 C07H3/04 C08B1/00 C09K3/00 C12N1/00 C12N1/16 C12N1/20 C12N1/38 C12N11/02 C12P19/02 C12P5/02 C12P7/00 C12P7/02 C12P7/04 C12P7/06 C12P7/10 C12P7/14 C12P7/16 C12P7/18 C12P7/20 C12P7/40 C12P7/42 C12P7/46 C12P7/52 C12P7/54 C12P7/56 C12P7/58 C12P7/64 C12R1/84 C12R1/865 (Advanced/Invention);
C07H3/00 C12R1/84 C12R1/865 (Advanced/Non-invention);
C07H3/00 C09K3/00 C12N1/00 C12N1/20 C12P19/00 C12P5/00 C12P7/00 C12P7/02 C12P7/14 (Core/Invention)
International (IPC 1-7): C07H3/00 C12N1/20 C12P7/06 C12P7/10 C12R1/84 C12R1/865 G01N23/00
CPC: C12P7/04 C12P7/40 C12P5/02 C12P7/18 C12P7/16 C12P7/20 C12P7/54 C12P7/52 C12P7/58 C12P7/56 C12P7/42 C12P7/46 C12P7/06 C07H3/02 C07H3/04 C12N1/20 C12P7/6409 Y02E50/16 Y02E50/343 C12P7/10 C12N1/38 C12P19/02 C12P2203/00 C12P2201/00 Y02E50/17
European: C07H3/02 C07H3/04 C12N1/20 C12P7/06 Y02E50/16 Y02E50/17
US: 1/1 252/182.12 252/182.120S 435/134 435/135 435/136 435/137 435/139 435/140 435/141 435/142 435/145 435/146 435/147 435/157 435/158 435/159 435/160 435/161 435/161S 435/162 435/162P 435/165 435/165S 435/167 435/170 435/171 435/174 435/177 435/179 435/243 435/243S 435/252 435/252.1 435/254.2 435/254.21 435/254.23 435/255.1 435/255.2 435/255.5 560/76

Family:

Publication number	Publication date	Application number	Application date
AR071837 AA	20100721	AR2009P101558	20090429
AR105876 AB	20171115	AR2016P102663	20160831
AU2009243195 AA	20091105	AU20090243195	20090428
AU2009243195 BB	20141009	AU20090243195	20090428
AU2013202844 AA	20130502	AU20130202844	20130408
AU2013202844 BB	20150115	AU20130202844	20130408
AU2014203768 AA	20140828	AU20140203768	20140709
AU2014203768 BB	20141211	AU20140203768	20140709
AU2014203768 BI	20150514	AU20140203768	20140709
AU2015201311 AA	20150402	AU20150201311	20150312
AU2015201311 BB	20170302	AU20150201311	20150312
AU2017201313 AA	20170413	AU20170201313	20170227
AU2017201313 BB	20190314	AU20170201313	20170227
BR122017001973 A2	20180904	BR20171201973	20090428
BR122017002078 A2	20180904	BR20171202078	20090428
BRPI0913059 A2	20170502	BR2009PI13059	20090428
CA2722777 AA	20091105	CA20092722777	20090428
CN102076859 A	20110525	CN200980124437	20090428
CN102076859 B	20160120	CN200980124437	20090428
CN105274151 A	20160127	CN201510818898	20090428
CN105274151 B	20180202	CN201510818898	20090428
DE602009036817 D1	20160428	DE200960036817T	20090428
DE602009037627 D1	20160512	DE200960037627T	20090428
DK2279256 T3	20160613	DK20090739618T	20090428
DK2647717 T3	20160627	DK20130168384T	20090428
EP2279256 A1	20110202	EP20090739618	20090428
EP2279256 B1	20160316	EP20090739618	20090428
EP2647716 A1	20131009	EP20130168381	20090428
EP2647716 B1	20181128	EP20130168381	20090428
EP2647717 A1	20131009	EP20130168384	20090428
EP2647717 B1	20160406	EP20130168384	20090428
EP3461899 A1	20190403	EP20180207456	20090428
ES2565777 T3	20160406	ES20090739618T	20090428
ES2576485 T3	20160707	ES20130168384T	20090428
HU027108 T2	20160829	HU20130168384T	20090428
HU028703 T2	20161228	HU20090739618T	20090428
IN07573CN2010 A	20110805	IN2010CN07573	20101124
IN201848033057 A	20180914	IN201848033057	20180903
IN201848033058 A	20180914	IN201848033058	20180903
IN201848033059 A	20180914	IN201848033059	20180903
IN301298 B	20180928	IN2010CN07573	20101124
MX2010011973 A1	20110121	MX20100011973	20090428
NZ588868 A	20120427	NZ20090588868	20090428
NZ596131 A	20130531	NZ20090596131	20090428
NZ602860 A	20140328	NZ20090602860	20090428
NZ711579 A	20161125	NZ20090711579	20090428
NZ719514 A	20160729	NZ20090719514	20090428
NZ721896 A	20180525	NZ20090721896	20090428
PL2647717 T3	20161130	PL20130168384T	20090428
RU2010148802 A	20120610	RU20100148802	20090428
RU2013114225 A	20141010	RU20130114225	20130329

RU2013114225 A	20141010	RU20130114225	20090428
RU2015131640 A	20170203	RU20150131640	20150729
RU2490326 C2	20130820	RU20100148802	20090428
RU2563516 C2	20150920	RU20130114225	20090428
RU2658778 C2	20180622	RU20150131640	20150729
SI2279256 T1	20160930	SI20090031397	20090428
SI2647717 T1	20160630	SI20090031418	20090428
TH119669 A	20130117	TH20091001930	20090429
TR201603506 T4	20160421	TR20160003506T	20090428
TR201608079 T4	20160721	TR20160008079T	20090428
UA106042 C2	20140725	UA20100014291	20090428
US2009286295 AA	20091119	US20090417840	20090403
US2013011895 AA	20130110	US20120554392	20120720
US2013295624 AA	20131107	US20130935065	20130703
US2014147907 AA	20140529	US20140169174	20140131
US2015329879 AA	20151119	US20150813702	20150730
US2016160240 AA	20160609	US20160047118	20160218
US2017121737 AA	20170504	US20160288121	20161007
US8236535 BB	20120807	US20090417840	20090403
US8518683 BB	20130827	US20120554392	20120720
US8709771 BB	20140429	US20130935065	20130703
US9109241 BB	20150818	US20140169174	20140131
US9290780 BB	20160322	US20150813702	20150730
US9493796 BB	20161115	US20160047118	20160218
WO09134816 A1	20091105	WO2009US42000	20090428
WO09134816 A9	20130808	WO2009US42000	20090428

Priority:

US20080049407P	20080430	US20090417840	20090403	AU20090243195	20090428
BR2009PI13059	20090428	NZ20090588868	20090428	EP20090739618	20090428
CN200980124437	20090428	EP20130168384	20090428	EP20130168381	20090428
WO2009US42000	20090428	NZ20090596131	20090428	NZ20090711579	20090428
NZ20090622164	20090428	IN2010CN07573	20101124	IN2010CN07573	20101124
US20120554392	20120720	AU20130202844	20130408	EP20130168381	20130517
US20130935065	20130703	US20140169174	20140131	AU20140203768	20140709
AU20150201311	20150312	US20150813702	20150730	US20160047118	20160218
US20160288121	20161007	AU20170201313	20170227		

Probable Assignee: XYLECO INC

Assignee(s): (std): KSILEKO INK ; MASTERMAN THOMAS CRAIG ; MEDOFF MARSHALL ; XYLECO ; XYLECO INC

Assignee(s): XYLECO INC WAKEFIELD

Inventor(s): (std): MASTERMAN THOMAS CRAIG ; MEDOFF MARSHALL ; THOMAS CRAIG MASTERMAN ; MASTERMAN THOMAS ; MARSHALL MEDOFF ; CRAIG MASTERMAN THOMAS ; MASTERMAN CRAIG THOMAS ; MASTERMAN TOMAS KREJG

Inventor(s): CRAIG THOMAS MASTERMAN ; MASTERMAN CRAIG THOMAS ROCKPORT ; MASTERMAN THOMAS CRAIG ROCKPORT ; MEDOFF MARSHALL BROOKLINE

Agent(s): SPRUSON AND FERGUSON; STOLMAR AND PARTNER PATENTANWAELTE PARTG MBB; SIMPSON MARK GEOFFREY; POTTER CLARKSON LLP; VON FUENER NICOLAI; DE ELZABURU ALBERTO; PONS ANGEL; EVROMARKPAT; FULYA SUEMERALP; FISH AND RICHARDSON PC; LEBER PATENT LAW PC; CELIA H; FRANCESCO DE REGE; LEBER IP LAW; LEBER CELIA H

Designated states: AE AG AL AM AO AT AU AZ BA BB BE BF BG BH BJ BR BW BY BZ CA CF CG CH CI CM CN CO CR CU CY CZ DE DK DM DO DZ EC EE EG ES FI FR GA GB GD GE GH GM GN GQ GR GT GW HN HR HU ID IE IL IN IS IT JP KE KG KM KN KP KR KZ LA LC LI LK LR LS LT LU LV LY MA MC MD ME MG MK ML MN MR MT MW MX MY MZ NA NE NG NI NL NO NZ OM PG PH PL PT RO RS RU SC SD SE SG SI SK SL SM SN ST SV SY SZ TD TG TJ TM TN TR TT TZ UA UG US UZ VC VN ZA ZM ZW

28) Family number: 30886862 (US6787245B)

© PatBase

Title: SULFONATED ALIPHATIC-AROMATIC COPOLYESTERS AND SHAPED ARTICLES PRODUCED THEREFROM

Abstract: Sulfonated aliphatic-aromatic copolyesters are provided. The copolyesters are produced from a mixture of aromatic dicarboxylic acids, aliphatic dicarboxylic acids, ethylene glycol, other glycols, and components containing alkali metal or alkaline earth metal sulfo groups, such as a metal 5-sulfoisophthalic acid derivative. The copolyesters have lower sulfonation than known sulfonated polyesters, and provide advantageous thermal properties for some end uses. The sulfonated aliphatic-aromatic copolyesters are useful in forming coatings or films on various substrates, and in packaging. Some compositions comprising the sulfonated aliphatic-aromatic copolyesters are biodegradable, as are some of the sulfonated aromatic-aromatic copolyesters.

Classifications:

International (IPC 8-9): B32B27/36 C08G63/688 C08J5/18 C08L67/02 D01F6/84 D01F8/14 D21H19/28 (Advanced/Invention); C08K13/04 C08K3/00 C08L101/16 D21H19/62 D21H27/10 (Advanced/Non-invention); B32B27/36 C08G63/00 C08J5/18 C08L67/00 D01F6/84 D01F8/14 D21H19/00 (Core/Invention); C08K13/00 C08K3/00 C08L101/00 D21H27/10 (Core/Non-invention)

International (IPC 1-7): B32B27/36 C08G63/688 C08G75/00

CPC: Y10T428/2949 D01F8/14 B32B27/36 C08G63/6886 C08K13/04 C08L67/02 D01F6/84 D21H19/28 D21H19/62 D21H27/10 Y10T428/249921 Y10T428/31786 C08K3/013

European: B32B27/36 C08G63/688D2 C08L67/02 D01F6/84 D01F8/14 D21H19/28 M08K13/04 M08K3/00P5 N21H19/62 N21H27/10

US: 428/221 428/384 428/480 524/13 524/14 524/15 524/35 524/424 524/425 524/442 524/445 524/47 524/81 524/9 525/437 525/444 528/295 528/296 528/302 528/308 528/308.6

JP F-Term: 4F071 4F071/AA08 4F071/AA09 4F071/AA47 4F071/AB03 4F071/AB18 4F071/AB21 4F071/AB24 4F071/AB26 4F071/AB28 4F071/AB29 4F071/AE17 4F071/BA01 4F071/BB06 4F071/BB08 4F071/BC01 4F071/BC12 4J002 4J002/AB01/2 4J002/AB04/2 4J002/CF03/2 4J002/CF10/1 4J002/CL08/2 4J002/DA03/6 4J002/DE13/6 4J002/DE23/6 4J002/DG04/6 4J002/DJ00/6 4J002/DJ01/6 4J002/DJ04/6 4J002/DL00/6 4J002/FD01/6 4J002/GF00 4J002/GG00 4J002/GG02 4J002/GK01

4J002/GT00 4J029 4J029/AA03 4J029/AB01 4J029/AC03 4J029/AE03 4J029/BA01 4J029/BA02 4J029/BA03 4J029/BA04 4J029/BA05 4J029/BD02 4J029/BD07/A 4J029/BE04 4J029/BF09 4J029/BF21 4J029/BF25 4J029/CA02 4J029/CA03 4J029/CA04 4J029/CA05 4J029/CA06 4J029/CA09 4J029/CB05/A 4J029/CB06/A 4J029/CC05/A 4J029/CC06/A 4J029/CH02 4J029/DB07 4J029/DB13 4J029/FC02 4J029/FC03 4J029/FC08 4J029/FC12 4J029/FC14 4J029/FC16 4J029/JE18/2 4J029/JF47/1 4J029/JF54/1 4J029/KE03 4J029/KE05 4J200 4J200/AA02 4J200/AA04 4J200/AA06 4J200/BA02 4J200/BA11 4J200/CA01 4J200/CA02 4J200/CA03 4J200/CA04 4J200/CA05 4J200/CA06 4J200/CA09 4J200/DA03 4J200/DA17
JP F-Index: C08G63/688 C08J5/18 C08L101/16 C08L67/02
JP Facet: CFD

Family:

Publication number	Publication date	Application number	Application date
CN100558785 C	20091111	CN200480021957	20040610
CN1829759 A	20060906	CN200480021957	20040610
DE602004013145 D1	20080529	DE200460013145T	20040610
DE602004013145 T2	20090702	DE200460013145T	20040610
EP1631613 A1	20060308	EP20040755312	20040610
EP1631613 B1	20080416	EP20040755312	20040610
JP2007502909 T2	20070215	JP20060533799T	20040610
JP4614963 B2	20110119	JP20060533799T	20040610
US6787245 BA	20040907	US20030459189	20030611
WO05000940 A1	20050106	WO2004US19067	20040610

Priority:
US20030459189 20030611 WO2004US19067 20040610

Probable Assignee: E I DU PONT DE NEMOURS AND CO

Assignee(s): (std): DU PONT ; EIDU PONT DE NEMOURS AND CO ; HAYES RICHARD ALLEN

Assignee(s): E I DU PONT DE NEMOURS AND CO ; E I DU PONT DE NEMOURS AND COMPANY ; E I DUPONT DE NEMOURS AND COMPANY ; EI DU PONT DE NEMOURS AND CO ; EI DUPONT DE NEMOURS AND CO

Inventor(s): (std): HAYES RICHARD ALLEN ; ALLEN HAYES RICHARD

Agent(s): HIRSCH MARC ROGER ET AL; YAMASAKI KAZUO; OGAWA NOBUO; HAKODA ATSUSHI; KUMAKURA YOSHIO; ASAI KENJI

Designated states: AE AG AL AM AT AU AZ BA BB BE BF BG BJ BR BW BY BZ CA CF CG CH CI CM CN CO CR CU CY CZ DE DK DM DZ EC EE EG ES FI FR GA GB GD GE GH GM GN GQ GR GW HR HU ID IE IL IN IS IT JP KE KG KP KR KZ LC LK LR LS LT LU LV MA MC MD MG MK ML MN MR MW MX MZ NA NE NI NL NO NZ OM PG PH PL PT RO RU SC SD SE SG SI SK SL SN SY SZ TD TG TJ TM TN TR TT TZ UA UG US UZ VC VN YU ZA ZM ZW

29) Family number: 43952875 (US2009283229A) © PatBase

Title: FUNCTIONALIZING CELLULOSIC AND LIGNOCELLULOSIC MATERIALS

Abstract: Irradiated lignocellulosic or cellulosic materials are provided which contain carboxylic acid groups and/or other functional groups not present in a naturally occurring cellulosic or lignocellulosic material from which the irradiated material was obtained

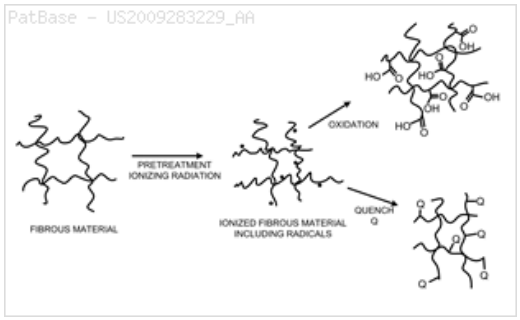

Classifications:
International (IPC 8-9): A23G3/32 A41D1/00 A63B59/06 A63B59/50 A63B59/52 B01J19/08 B01J19/12 B02C23/18 B03C9/00 B05D3/00 B05D3/06 B05D7/06 B27K5/00 B27N1/00 B29C65/00 B29C65/14 B29C71/04 B32B21/14 C07C1/20 C07C27/00 C07C27/04 C07C27/24 C07C29/00 C07C31/00 C07C6/00 C07H3/00 C07H3/04 C08B1/00 C08B15/00 C08B15/02 C08B15/04 C08B15/10 C08B3/06 C08B30/02 C08H7/00 C08H8/00 C08J11/10 C08J3/24 C08J3/28 C08L97/02 C10L1/00 C10L1/02 C10L3/00 C12M1/00 C12N13/00 C12P C12P1/00 C12P13/00 C12P19/00 C12P19/02 C12P19/14 C12P21/00 C12P3/00 C12P5/00 C12P5/02 C12P7/00 C12P7/02 C12P7/04 C12P7/06 C12P7/10 C12P7/16 C12P7/40 C12P7/58 C13B50/00 C13B99/00 C13K1/00 C13K1/02 C13K1/06 C13K5/00 D02G3/00 D02G3/02 D03D15/00 D04B1/14 D04B21/00 D04H D04H1/12 D04H1/26 D04H1/42 D04H1/425 D04H3/00 D04H5/00 D06B3/10 D06M D06M10/00 D06M10/02 D06M10/06 D06M10/08 D06M10/10 D06M14/22 D21B1/02 D21B1/06 D21B1/10 D21C1/00 D21C1/10 D21C5/00 D21C9/00 D21F11/00 D21F5/00 D21F7/00 D21G1/00 D21H11/00 D21H11/04 D21H11/12 D21H11/14 D21H11/16 D21H11/20 D21H21/28 D21H23/22 D21H25/00 D21H25/04 G01N23/00 G01N23/02 G03C1/00 G03C5/00 G21K5/00 G21K5/10 H01J37/30 H01J37/317 (Advanced/Invention);
C07C27/00 C12P19/00 C12P19/02 C12P19/14 C12P7/02 C12P7/10 D06M101/04 D06M101/06 D21C9/00 (Advanced/Non-invention);
A41D1/00 B01J19/08 B01J19/12 B03C9/00 B05D3/00 B05D3/06 B05D7/06 B27K5/00 B27N1/00 B29C65/00 B29C65/14 B32B21/00 C07C31/00 C07H3/00 C08B15/00 C08B3/00 C08H8/00 C08J3/28 C12N1/20 C12N13/00 C12P5/00 C12P7/00 C12P7/02 C13K1/00 C13K5/00 D03D15/00 D04B1/14 D04B21/00 D04H1/42 D04H3/00 D04H5/00 D06M14/00 D21B1/00 D21B1/06 D21C1/00 D21C5/00 D21C9/00 D21F5/00 D21G1/00 D21H11/00 D21H21/00 D21H23/00 D21H25/00 G21K5/00 (Core/Invention);
C12P D03D D04B D04H D06M (Subclass/Invention)
International (IPC 1-7): B01J19/08 B05D3/00 B05D3/06 B27K5/00 C07H3/00 C08B3/00 C08B3/06 C12N1/20 C12P5/02 C12P7/06 C12P7/10 C12P7/16 D03D15/00 D04B1/14 D04H1/42 D06M14/22 D21B1/02 D21B1/06 D21C1/00 D21F5/00 G01N23/00 G01N23/02
CPC: Y02E50/10 C12P5/02 C12P7/06 C12P7/16 D21B1/06 D21C1/10 D21F5/00 D21G1/0093 C12P19/00 D21B1/063 B02C23/18 C08B1/00 C12P2201/00 A63B2209/00 B27K5/003 B27N1/00 C08B15/04 D06M10/008 Y02E50/343 Y02E50/17 B01J2219/00006 B01J2219/0869 B01J2219/0879 B01J2219/089 C12P19/02 G21K5/00 D21H21/28 H01J37/317 B01J19/08 H01J2237/303 C08B15/02 C08H8/00 D21C9/007 C13K1/02 H01J37/3002 Y10T442/30 Y10T442/40 Y10T442/60 Y10T442/697 D21B1/02 C07C27/24 D06M10/001 D06M10/02 D06M10/08 D06M2101/04 D06M2101/06 D10B2201/00 D10B2201/01 D10B2201/22 D10B2201/26 D10B2201/28 B01J19/123 B01J19/121 C12M45/00 B01J19/126 C07C27/00 Y10T428/249921 D21C1/00 D21H11/16 B01J2219/08 C07C27/04 D02G3/02 D04B1/14 D06B3/10 D06M10/00 D10B2501/00 D10B2505/04 D04H1/4258 D04H1/42 D04H1/4382 Y02E50/16 Y02P20/582 B01J19/081 B01J2219/0871 C12P19/14 D02G3/00 A63B59/50 A63B2102/18 C08B15/00 D21H25/04 D21H11/04 D03D15/00 D04H1/425 Y10T156/10 B27K5/0045 D21H11/20 B27K5/004 D06M10/06 H01J2237/3165 B27K5/0035 C08J3/28 C08J2397/02 A63B59/52 D21C5/00 B27K5/00 C12P7/04 D21F7/00 C10L1/02 C10L2290/26 C10L2200/0469 D21B1/10 D21H11/12 D21H11/14 C12P7/10 B01J19/085

European: A63B59/06 B01J19/08B6 B27K5/00R B27N1/00 C08B15/02 C08B15/04 C08H8/00 C08J3/28 C12P19/02 C12P5/02 C12P7/06 C12P7/10 C12P7/16 D04H1/42 D06M10/00B D06M10/00N D06M10/02 D06M10/08 D21B1/02 D21B1/06 D21C1/10 D21C9/00B4 D21F5/00 D21G1/00R8 D21H25/04 G21K5/00 K63B209/00 L01J219/00A2B L01J219/08F L01J219/08M6 L01J219/08M8J M08J397/02 M12P201/00 N06M101/04 N06M101/06 N10B201/00 N10B201/01 N10B201/22 N10B201/26 N10B201/28 N21C9/00B4 Y02E50/16 Y02E50/17
US: 1/1 127/34 127/34S 127/37 156/60 156/60S 162/141 162/158 162/158S 162/162 162/192 162/192S 162/198 162/5 162/50 162/50P 162/58 162/63 162/9 162/92 2/69 2/69S 204/157.15 204/157.150S 204/157.63 204/157.630S 204/157.68 204/157.680S 204/157.9 204/157.900S 241/15 250/492.1 250/492.100P 250/492.3 250/492.300S 378/64 378/64P 427/457 427/457S 427/532 427/551 428/22 428/221 428/221S 435/136 435/136S 435/137 435/155 435/155S 435/157 435/165 435/166 435/166S 435/168 435/168S 435/173.1 435/173.100S 435/41 435/41S 435/68.1 435/68.100P 435/71.1 435/71.100S 435/72 435/72P 435/72S 435/99 44/307 44/307S 442/181 442/181P 442/304 442/304S 442/327 442/327S 442/415 442/415S 530/500 536/1.11 536/1.110S 536/123.13 536/123.130P 568/840 568/840P 568/878 568/880 568/902 568/903 8/116.1 8/444

Family:

Publication number	Publication date	Application number	Application date
AR071528 AA	20100623	AR2009P101550	20090429
AR071668 AA	20100707	AR2009P101551	20090429
AR071669 AA	20100707	AR2009P101554	20090429
AR072955 AA	20101006	AR2009P101553	20090429
AR079089 AA	20111228	AR2009P101559	20090429
AR105786 AB	20171108	AR2016P102567	20160823
AR105787 AB	20171108	AR2016P102568	20160823
AR105788 AB	20171108	AR2016P102569	20160823
AR105789 AB	20171108	AR2016P102570	20160823
AR105790 AB	20171108	AR2016P102571	20160823
AR105791 AB	20171108	AR2016P102572	20160823
AR105792 AB	20171108	AR2016P102573	20160823
AR106333 AB	20180103	AR2016P103123	20161013
AR106334 AB	20180103	AR2016P103124	20161013
AR106335 AB	20180103	AR2016P103125	20161013
AR110335 AB	20190320	AR2017P103443	20171207
AR110807 AB	20190508	AR2017P103444	20171207
AU2009241577 AA	20091105	AU20090241577	20090428
AU2009241577 BB	20140522	AU20090241577	20090428
AU2009246711 AA	20091119	AU20090246711	20090428
AU2009246711 BB	20140626	AU20090246711	20090428
AU2013202812 AA	20130502	AU20130202812	20130408
AU2013202812 BB	20140814	AU20130202812	20130408
AU2013202814 AA	20130502	AU20130202814	20130408
AU2013202814 BB	20140807	AU20130202814	20130408
AU2013202816 AA	20130502	AU20130202816	20130408
AU2013202816 BB	20140731	AU20130202816	20130408
AU2013202841 AA	20130502	AU20130202841	20130408
AU2013202841 BB	20150507	AU20130202841	20130408
AU2013202853 AA	20130502	AU20130202853	20130408
AU2013202853 BB	20140724	AU20130202853	20130408
AU2013203330 AA	20130502	AU20130203330	20130410
AU2013203330 BB	20140807	AU20130203330	20130410
AU2013203363 AA	20130502	AU20130203363	20130410
AU2013203363 BB	20160421	AU20130203363	20130410
AU2014218402 AA	20140918	AU20140218402	20140827
AU2014218402 BB	20151203	AU20140218402	20140827
AU2016200488 AA	20160218	AU20160200488	20160128
AU2016200488 BB	20180125	AU20160200488	20160128
AU2016202702 AA	20160519	AU20160202702	20160428
AU2016202702 BB	20170316	AU20160202702	20160428
AU2017202121 AA	20170420	AU20170202121	20170330
AU2017232237 AA	20171012	AU20170232237	20170925
AU2017272176 AA	20171221	AU20170272176	20171205
AU2019202986 AA	20190523	AU20190202986	20190429
BR122017001932 A2	20180206	BR20171201932	20090428
BR122017001962 B1	20190618	BR20171201962	20090428
BR122018008322 B1	20181016	BR20181208322	20090428
BRPI0911512 A2	20151006	BR2009PI11512	20090428
BRPI0911512 B1	20181016	BR2009PI11512	20090428
BRPI0913013 A2	20170822	BR2009PI13013	20090428
BRPI0913013 B1	20180619	BR2009PI13013	20090428
CA2722532 AA	20101025	CA20092722532	20090428
CA2722532 C	20170606	CA20092722532	20090428
CA2722601 AA	20101025	CA20092722601	20090428
CA2722601 C	20151124	CA20092722601	20090428
CA2722881 AA	20091105	CA20092722881	20090428
CA2722881 C	20160126	CA20092722881	20090428
CA2723175 AA	20091105	CA20092723175	20090428
CA2723175 C	20151027	CA20092723175	20090428
CA2820962 AA	20091105	CA20092820962	20090428
CA2820962 C	20161101	CA20092820962	20090428
CA2855044 AA	20091119	CA20092855044	20090428

CA2855044 C	20151208	CA20092855044	20090428
CA2902255 AA	20091119	CA20092902255	20090428
CA2902255 C	20160126	CA20092902255	20090428
CA2902259 AA	20091119	CA20092902259	20090428
CA2902259 C	20160209	CA20092902259	20090428
CA2902264 AA	20091119	CA20092902264	20090428
CA2902264 C	20160628	CA20092902264	20090428
CA2902350 AA	20091119	CA20092902350	20090428
CA2902350 C	20180410	CA20092902350	20090428
CA2910246 AA	20091105	CA20092910246	20090428
CA2910246 C	20190122	CA20092910246	20090428
CA2914001 AA	20091105	CA20092914001	20090428
CA2914001 C	20180410	CA20092914001	20090428
CA2942253 AA	20091105	CA20092942253	20090428
CA2965647 AA	20091105	CA20092965647	20090428
CA2993072 AA	20091119	CA20092993072	20090428
CA3027084 AA	20091105	CA20093027084	20090428
CN102066063 A	20110518	CN200980122442	20090428
CN102066063 B	20150902	CN200980122442	20090428
CN102066634 A	20110518	CN200980122444	20090428
CN102066634 B	20160113	CN200980122444	20090428
CN102066654 A	20110518	CN200980122443	20090428
CN102066654 B	20160803	CN200980122443	20090428
CN102076862 A	20110525	CN200980124452	20090428
CN105150324 A	20151216	CN201510449399	20090428
CN105150324 B	20171205	CN201510449399	20090428
CN105442180 A	20160330	CN201510765623	20090428
CN105442180 B	20171215	CN201510765623	20090428
CN105839437 A	20160810	CN201610355382	20090428
CN105839437 B	20180109	CN201610355382	20090428
CN105907813 A	20160831	CN201610183603	20090428
CN106012674 A	20161012	CN201610355373	20090428
CN106012674 B	20181016	CN201610355373	20090428
CN107326055 A	20171107	CN201710695954	20090428
DE602009049981 D1	20180118	DE200960049981T	20090428
DE602009057985 D1	20190509	DE200960057985T	20090428
DK2285972 T3	20180129	DK20090747143T	20090428
DK2304100 T3	20171023	DK20090739566T	20090428
EA021993 B1	20151030	EA20100071256	20090428
EA201071256 A1	20110630	EA20100071256	20090428
EA201500129 A1	20151030	EA20150000129	20090428
EP2285972 A2	20110223	EP20090747143	20090428
EP2285972 B1	20171220	EP20090747143	20090428
EP2300203 A2	20110330	EP20090739550	20090428
EP2300203 B1	20190612	EP20090739550	20090428
EP2304100 A2	20110406	EP20090739566	20090428
EP2304100 A4	20150107	EP20090739566	20090428
EP2304100 B1	20170719	EP20090739566	20090428
EP3235948 A1	20171025	EP20170171513	20090428
EP3235948 B1	20190417	EP20170171513	20090428
EP3305906 A1	20180411	EP20170200134	20090428
EP3498911 A1	20190619	EP20190156179	20090428
ES2644403 T3	20171128	ES20090739566T	20090428
ES2658839 T3	20180312	ES20090747143T	20090428
HU035066 T2	20180502	HU20090739566T	20090428
HU036257 T2	20180628	HU20090747143T	20090428
IL208976 A0	20110131	IL20100208976	20101028
IL208976 A1	20131128	IL20090208976	20090428
IL208978 A0	20110131	IL20090208978	20090428
IL208978 A1	20160229	IL20090208978	20090428
IL225699 A0	20130627	IL20090225699	20090428
IL225699 A1	20160229	IL20090225699	20090428
IL225700 A0	20130627	IL20090225700	20090428
IL225700 A1	20160421	IL20090225700	20090428
IL227123 A0	20130829	IL20090227123	20090428
IL227123 A1	20160929	IL20090227123	20090428
IL243864 A0	20160421	IL20090243864	20090428
IL243864 A1	20170629	IL20090243864	20090428
IL243865 A0	20160421	IL20090243865	20090428
IL243865 A1	20180228	IL20090243865	20090428
IL243866 A0	20160421	IL20090243866	20090428
IL243866 A1	20170629	IL20090243866	20090428
IL243867 A0	20160421	IL20090243867	20090428
IL243868 A0	20160421	IL20090243868	20090428
IL243868 A1	20170529	IL20090243868	20090428
IL243869 A0	20160421	IL20090243869	20090428

IL243870 A0	20160421	IL20090243870	20090428
IL243870 A1	20170430	IL20090243870	20090428
IL247305 A1	20170529	IL20090247305	20090428
IL252129 A0	20170731	IL20090252129	20090428
IL260170 A0	20180731	IL20090260170	20090428
IN07574CN2010 A	20110812	IN2010CN07574	20101124
IN201848013010 A	20180413	IN201848013010	20180405
KR101632431 B1	20160701	KR20107026707	20090428
KR101698505 B1	20170120	KR20167007445	20090428
KR101745716 B1	20170609	KR20167015573	20090428
KR101847794 B1	20180410	KR20177014957	20090428
KR101980498 B1	20190520	KR20187009168	20090428
KR20110003558 A	20110112	KR20107026707	20090428
KR20160036644 A	20160404	KR20167007445	20090428
KR20160075802 A	20160629	KR20167015573	20090428
KR20170064004 A	20170608	KR20177014957	20090428
KR20180037070 A	20180410	KR20187009168	20090428
LT2285972 T	20180125	LT20090747143T	20090428
LT2304100 T	20171025	LT20090739566T	20090428
MX2010011965 A1	20110407	MX20100011965	20090428
MX2010011966 A1	20110121	MX20100011966	20090428
MX2010011968 A1	20110218	MX20100011968	20090428
MX2010011977 A1	20110121	MX20100011977	20090428
MX343660 B	20161116	MX20140015956	20090428
MX344401 B	20161214	MX20120009676	20090428
MX350780 B	20170918	MX20150001160	20090428
MX362414 B	20190109	MX20160011252	20090428
NZ588861 A	20120330	NZ20090588861	20090428
NZ588862 A	20120427	NZ20090588862	20090428
NZ596164 A	20120831	NZ20090596164	20090428
NZ596165 A	20120928	NZ20090596165	20090428
NZ601234 A	20140131	NZ20090601234	20090428
NZ602116 A	20140328	NZ20090602116	20090428
NZ611260 A	20140926	NZ20090611260	20090428
NZ611799 A	20140926	NZ20090611799	20090428
NZ613668 A	20150227	NZ20090613668	20090428
NZ614040 A	20150227	NZ20090614040	20090428
NZ622605 A	20150130	NZ20090622605	20090428
NZ700934 A	20160729	NZ20090700934	20090428
NZ713382 A	20170224	NZ20090713382	20090428
NZ719805 A	20180427	NZ20090719805	20090428
NZ728681 A	20180727	NZ20090728681	20090428
PL2285972 T3	20180430	PL20090747143T	20090428
PL2304100 T3	20171229	PL20090739566T	20090428
RU2010148773 A	20120610	RU20100148773	20090428
RU2010148775 A	20120610	RU20100148775	20090428
RU2013136169 A	20150210	RU20130136169	20130801
RU2013140754 A	20150310	RU20130140754	20130903
RU2017134842 A	20190404	RU20170134842	20171004
RU2017134842 A3	20190404	RU20170134842	20171004
RU2499664 C2	20131127	RU20100148775	20090428
RU2531798 C2	20141027	RU20100148773	20090428
RU2632092 C2	20171002	RU20130136169	20130801
RU2634878 C2	20171107	RU20130140754	20130903
SI2285972 T1	20180228	SI20090031782T	20090428
SI2304100 T1	20171130	SI20090031746T	20090428
TH114433 A	20120622	TH20091001931	20090429
TH116168 A	20120904	TH20091001936	20090429
TH117369 A	20121115	TH20091001928	20090429
TH117370 A	20121115	TH20091001933	20090429
TH118874 A	20121228	TH20091001927	20090429
TR201716059 T4	20171221	TR20170016059T	20090428
TR201801449 T4	20180221	TR20180001449T	20090428
UA108833 C2	20150625	UA20100104293	20090428
UA111463 C2	20160510	UA20100014296	20090428
UA118249 C2	20181226	UA20140000597	20090428
UA119132 C2	20190510	UA20140000596	20090428
US2009283229 AA	20091119	US20090417904	20090403
US2009321026 AA	20091231	US20090417707	20090403
US2010087687 AA	20100408	US20090417880	20090403
US2010093241 AA	20100415	US20090417731	20090403
US2010179315 AA	20100715	US20100719776	20100308
US2010206501 AA	20100819	US20100768482	20100427
US2010304439 AA	20101202	US20100849236	20100803
US2010304440 AA	20101202	US20100849262	20100803
US2011060133 AA	20110310	US20100943851	20101110

US2011067830 AA	20110324	US20100956319	20101130
US2011111456 AA	20110512	US20110009607	20110119
US2011124846 AA	20110526	US20110019304	20110201
US2011139383 AA	20110616	US20110009412	20110119
US2012074337 AA	20120329	US20110310485	20111202
US2012082296 AA	20120405	US20110324552	20111213
US2012285639 AA	20121115	US20120546570	20120711
US2013102029 AA	20130425	US20120656892	20121022
US2013146238 A9	20130613	US20120546570	20120711
US2014124151 AA	20140508	US20140150649	20140108
US2014329280 AA	20141106	US20140215105	20140317
US2015047799 AA	20150219	US20140474859	20140902
US2015068694 AA	20150312	US20140543632	20141117
US2015082556 AA	20150326	US20140557170	20141201
US2015104843 AA	20150416	US20140580100	20141222
US2015225902 AA	20150813	US20150694219	20150423
US2015265997 AA	20150924	US20150704733	20150505
US2015344914 AA	20151203	US20150810158	20150727
US2016038906 AA	20160211	US20150919221	20151021
US2016040359 AA	20160211	US20150918861	20151021
US2016090614 AA	20160331	US20150963064	20151208
US2016167010 AA	20160616	US20160048455	20160219
US2016265164 AA	20160915	US20160160612	20160520
US2016333528 AA	20161117	US20160219101	20160725
US2017095942 AA	20170406	US20160291636	20161012
US2017226689 AA	20170810	US20170411419	20170120
US2018236427 AA	20180823	US20180955418	20180417
US2018320317 AA	20181108	US20180035005	20180713
US2019070471 AA	20190307	US20180054399	20180803
US2019144894 AA	20190516	US20180205400	20181130
US2019153662 AA	20190523	US20180211462	20181206
US7846295 BA	20101207	US20090417720	20090403
US7867358 BB	20110111	US20090417707	20090403
US7867359 BB	20110111	US20090417904	20090403
US7935219 BB	20110503	US20100943851	20101110
US8052838 BB	20111108	US20100956319	20101130
US8070912 BB	20111206	US20110019304	20110201
US8083906 BB	20111227	US20100849236	20100803
US8142620 BB	20120327	US20100849262	20100803
US8212087 BB	20120703	US20090417880	20090403
US8221585 BB	20120717	US20110009412	20110119
US8277607 BB	20121002	US20110310485	20111202
US8497366 BB	20130730	US20100719776	20100308
US8641864 BB	20140204	US20120546570	20120711
US8716537 BB	20140506	US20120656892	20121022
US8834676 BB	20140916	US20100768482	20100427
US8900407 BB	20141202	US20110324552	20111213
US8911833 BB	20141216	US20090417731	20090403
US8946489 BB	20150203	US20140215105	20140317
US9062328 BB	20150623	US20140580100	20141222
US9062413 BB	20150623	US20140150649	20140108
US9132407 BA	20150915	US20150704733	20150505
US9175443 BB	20151103	US20150694219	20150423
US9187769 BA	20151117	US20150810158	20150727
US9278896 BA	20160308	US20150963064	20151208
US9283537 BB	20160315	US20150919221	20151021
US9365981 BB	20160614	US20140474859	20140902
US9422667 BB	20160823	US20150918861	20151021
US9487915 BB	20161108	US20140543632	20141117
US9587349 BB	20170307	US20140557170	20141201
US9968905 BB	20180515	US20160048455	20160219
US10047481 BB	20180814	US20160160612	20160520
VN16385 A1	20170125	VN20100002984	20090428
WO09134736 A2	20091105	WO2009US41881	20090428
WO09134736 A3	20100225	WO2009US41881	20090428
WO09134748 A2	20091105	WO2009US41900	20090428
WO09134748 A3	20100304	WO2009US41900	20090428
WO09134749 A2	20091105	WO2009US41901	20090428
WO09134749 A3	20100304	WO2009US41901	20090428
WO09134764 A2	20091105	WO2009US41925	20090428
WO09134764 A3	20100514	WO2009US41925	20090428
WO09140057 A2	20091119	WO2009US41942	20090428
WO09140057 A3	20100701	WO2009US41942	20090428
ZA201605083 A	20171129	ZA20160005083	20090428
ZA201605084 A	20171129	ZA20160005084	20090428
ZA201605086 A	20171129	ZA20160005086	20090428

ZA201605087 A	20171129	ZA20160005087	20090428
ZA201605088 A	20171129	ZA20160005088	20090428
ZA201605089 A	20171129	ZA20160005089	20090428
ZA201605090 A	20171129	ZA20160005090	20090428
ZA201605091 A	20171129	ZA20160005091	20090428
ZA201605092 A	20171129	ZA20160005092	20090428
ZA201605093 A	20171129	ZA20160005093	20090428
ZA201605094 A	20171129	ZA20160005094	20090428

Priority:

US20080049391P	20080430	US20080049395P	20080430	US20080049394P	20080430
US20080049419P	20080430	US20080049404P	20080430	US20080049419	20080430
US20080049415	20080430	US20080049413	20080430	US20080049404	20080430
US20080049413P	20080430	US20080049415P	20080430	US20080049707P	20080430
US20080073432P	20080618	US20080073436P	20080618	US20080073496P	20080618
US20080073496	20080618	US20090417707	20090403	US20090417904	20090403
US20090417880	20090403	US20090417731	20090403	US20090417720	20090403
AU20090241577	20090428	AU20090246711	20090428	CA20092820962	20090428
CA20092723175	20090428	CA20092722601	20090428	CA20092722881	20090428
CA20092722532	20090428	BR2009PI13013	20090428	CA20092902350	20090428
CA20092910246	20090428	BR2009PI11512	20090428	NZ20090588861	20090428
NZ20090588862	20090428	NZ20090596165	20090428	NZ20090596164	20090428
NZ20090602116	20090428	NZ20090601234	20090428	NZ20090611260	20090428
CN200980122442	20090428	CN200980122444	20090428	NZ20090614040	20090428
CN200980122443	20090428	CN200980124452	20090428	NZ20090700934	20090428
EP20090739566	20090428	EP20090747143	20090428	IN2010CN07574	20090428
NZ20090701321	20090428	NZ20090713382	20090428	UA20100014296	20090428
EP20170171513	20090428	WO2009US41925	20090428	WO2009US41942	20090428
WO2009US41901	20090428	WO2009US41900	20090428	US20100719776	20100308
US20100768482	20100427	US20100849262	20100803	US20100849236	20100803
US20100943851	20101110	US20100956319	20101130	US20110009412	20110119
US20110009607	20110119	US20110019304	20110201	US20110310485	20111202
US20110324552	20111213	US20120546570	20120711	US20120656892	20121022
AU20130202812	20130408	AU20130202814	20130408	AU20130202841	20130408
AU20130202816	20130408	AU20130202853	20130408	AU20130203330	20130410
AU20130203363	20130410	CA20132723175	20130731	US20140150649	20140108
US20140215105	20140317	CA20142722601	20140711	AU20140218402	20140827
US20140474859	20140902	US20140543632	20141117	US20140557170	20141201
US20140580100	20141222	AU20150200267	20150121	US20150694219	20150423
US20150704733	20150505	US20150810158	20150727	CA20152722601	20150902
CA20152722601	20150903	CA20152722601	20150908	CA20152722601	20150911
US20150919221	20151021	US20150918861	20151021	CA20152722881	20151104
US20150963064	20151208	CA20152820962	20151222	AU20160200488	20160128
US20160048455	20160219	AU20160201659	20160316	AU20160202702	20160428
US20160160612	20160520	US20160219101	20160725	AU20160216617	20160817
CA20162820962	20160921	US20160291636	20161012	RU20170134842	20170004
US20170411419	20170120	AU20170202121	20170330	CA20172722532	20170512
EP20170171513	20170517	AU20170232237	20170925	RU20170134842	20171004
AU20170272176	20171205	CA20182902350	20180208	US20180955418	20180417
US20180035005	20180713	US20180054399	20180803	US20180205400	20181130
US20180211462	20181206	AU20190202986	20190429		

Probable Assignee: XYLECO INC

Assignee(s): (std): KSILEKO INK ; MEDOFF MARSHALL ; XYLECO INC

Assignee(s): XYLECO INCL-271 SALEM STREETWOBURNMA01801US ; XYLECO INC WAKEFIELD ; MEDOFF MARSHALL90 ADDINGTON ROADBROOKLINEMA02146US

Inventor(s): (std): MEDOFF MARSHALL ; MARSHALL MEDOFF ; MADOFF MARSHALL

Inventor(s): MEDOFF MARSHALL BROOKLINE ; MEDOFF MARSHALL90 ADDINGTON ROADBROOKLINEMA02146US

Agent(s): SPRUSON AND FERGUSON; SMART AND BIGGAR; STOLMAR AND PARTNER PATENTANWAELTE PARTG MBB; SIMPSON MARK GEOFFREY; VON FUENER NICOLAI; PONS ANGEL; REINHOLD COHN AND PARTNERS; EVROMARKPAT; FULYA SUEMERALP; FISH AND RICHARDSON PC; XYLECO INC; XYLECO INC CELIA LEBER; CELIA H; CELIA; LEBER PATENT LAW PC; LEBER PATENT LAW P; FRANCESCO; LEBER IP LAW; LEBER CELIA H; LEBER CELIA H ET AL

Designated states: AE AG AL AM AO AT AU AZ BA BB BE BF BG BH BJ BR BW BY BZ CA CF CG CH CI CM CN CO CR CU CY CZ DE DK DM DO DZ EC EE EG ES FI FR GA GB GD GE GH GM GN GQ GR GT GW HN HR HU ID IE IL IN IS IT JP KE KG KM KN KP KR KZ LA LC LI LK LR LS LT LU LV LY MA MC MD ME MG MK ML MN MR MT MW MX MY MZ NA NE NG NI NL NO NZ OM PG PH PL PT RO RS RU SC SD SE SG SI SK SL SM SN ST SV SY SZ TD TG TJ TM TN TR TT TZ UA UG US UZ VC VN ZA ZM ZW

30) Family number: 28290889 (US2003231485A)

© PatBase

Title: TUBULAR ELECTRO-LUMINESCENT PANEL(S) LIGHT DEVICE

Abstract: A tubular Electro-Luminescent panel(s) light device offer a desired bending directions with super brightness basing on certain width of panel incorporated proper invertor system. The said panel(s) with much narrow width than tube means to allow the panel(s) can be bend at any direction and angle within the tube means to offer a desired light effects. The said panel(s) can be flat or twisted within the tube means which may have the desired colored, transparency, wall thickness, diameter, shape, length for requirement. The said device may incorporated with non-elastic means, magnetic means, tube holder, sensor means, Integrated circuit to add a lot of desired variety features.

Classifications:

International (IPC 8-9): A41D27/08 A41G1/00 A42B1/24 A43B3/00 A45C15/06 A61L9/03 B60Q1/26 B60Q3/02 B60R11/00 B60R13/00 C10G1/00 C10G32/00 C12M1/00 C12M1/06 C12M1/12 C12M1/34 C12M3/00 C12P5/00 F21K2/00 F21K9/232 F21K9/235 F21K9/275 F21K9/60 F21K9/65 F21K99/00 F21L13/00 F21L14/00 F21L4/00 F21L4/02 F21L4/08 F21S10/00 F21S10/02 F21S10/06 F21S2/00 F21S4/00 F21S4/28

F21S6/00 F21S8/00 F21S8/08 F21S9/02 F21S9/03 F21V1/00 F21V1/10 F21V11/00 F21V11/08 F21V13/00 F21V13/02 F21V14/00 F21V14/02 F21V14/06 F21V14/08 F21V15/01 F21V17/00 F21V17/02 F21V17/10 F21V17/12 F21V17/16 F21V19/00 F21V19/02 F21V21/00 F21V21/005 F21V21/08 F21V21/088 F21V21/092 F21V21/096 F21V21/14 F21V21/22 F21V21/26 F21V21/30 F21V23/00 F21V23/02 F21V23/04 F21V23/06 F21V25/00 F21V25/02 F21V29/00 F21V29/502 F21V29/70 F21V3/00 F21V3/02 F21V31/00 F21V33/00 F21V5/00 F21V5/04 F21V7/00 F21V7/04 F21V8/00 F21V9/00 F21V9/16 F21Y113/13 F21Y115/10 G01J5/00 G01S3/786 G02B27/22 G02F1/13 G02F1/1335 G02F1/13357 G03B1/00 G03B15/03 G03B15/05 G03B19/18 G03B21/00 G03B21/14 G03B21/20 G03B23/00 G03B29/00 G03B3/00 G03H1/22 G04B19/04 G04B19/30 G04B37/12 G04B47/00 G04C10/00 G04C19/00 G04G99/00 G06F1/26 G06K9/00 G06K9/20 G06T7/00 G06T7/20 G06T7/70 G08B13/196 G08B13/24 G09F13/18 G09F13/22 G09F23/00 G09F23/04 G09F9/33 G09G3/30 G09G3/32 H01L21/00 H01L21/68 H01R103/00 H01R11/00 H01R13/66 H01R13/70 H01R13/717 H01R13/73 H01R24/76 H01R25/00 H01R27/00 H01R27/02 H01R3/00 H01R33/00 H01R33/009 H01R33/92 H01R39/00 H02G3/14 H02G3/18 H02J4/00 H02J7/00 H02J7/02 H02M1/00 H04N1/21 H04N5/225 H04N5/232 H04N5/235 H04N5/247 H04N5/33 H04N5/76 H04N5/77 H04N7/18 H04N9/31 H05B33/08 H05B35/00 H05B37/00 H05B37/02 H05B41/30 (Advanced/Invention);
B60R13/02 F21K9/23 F21K9/235 F21K9/238 F21S2/00 F21S9/02 F21V1/10 F21V19/00 F21V21/22 F21V21/29 F21V21/30 F21V23/00 F21V23/04 F21V23/06 F21V33/00 F21V8/00 F21V9/08 F21W121/00 F21W131/30 F21Y101/00 F21Y101/02 F21Y113/10 F21Y113/13 F21Y115/10 F21Y115/30 F21Y2115/10 F21Y2115/30 G01S3/786 G02B5/32 G03B21/14 G09F13/22 H01H9/18 H01J7/44 H01R103/00 H01R13/713 H01R24/76 (Advanced/Non-invention);
A42B1/00 A43B3/00 A45C15/00 B60Q3/00 B60R11/00 B60R13/00 F21L4/00 F21S4/00 F21V1/00 F21V17/00 F21V21/00 F21V21/005 F21V21/08 F21V21/14 F21V23/00 F21V23/04 F21V3/00 F21V33/00 G03B21/00 G03B21/14 G09F13/22 H01R3/00 H01R33/00 H05B37/02 (Core/Invention);
B60R13/02 G02B5/32 (Core/Non-invention)

International (IPC 1-7): F21V21/00 F21V21/08 F21V9/16 G01D11/28 G02B6/04 H01J1/62 H01R11/00

CPC: A42B1/242 A41D27/085 A42B1/244 A43B1/0036 A43B3/0005 A45C15/06 B60Q1/26 F21S2/00 G09F13/22 H05B37/0245 F21V19/00 F21V19/0015 F21V19/003 G03B15/03 H05B37/0218 H05B37/0236 Y02B20/42 F21V33/006 G09F23/00 H01H2009/186 H02G3/14 A43D999/00 B60R11/00 B60R13/00 B60R2011/0063 B60R2013/0287 H04M1/05 H04M1/6058 F21S10/066 H05B33/0857 A43C9/02 F21V19/02 F21V1/00 F21V3/00 F21V23/045 F21V5/048 F21V7/0066 G03B21/2086 Y10T307/406 H05B33/0842 F21S10/007 G06F1/266 H02J7/0042 F21S2/005 F21L4/00 F21S4/10 F21S4/20 A43B3/001 G03B21/20 F21V3/026 F21V14/08 F21V23/023 F21V33/0048 H01R13/6675 F21V23/005 F21V21/092 G09F13/18 G09F2013/222 F21V15/01 F21V33/0024 F21V33/0056 H01R13/6691 H01R13/713 H01R25/006 F21V33/004 H02J7/0045 H02J7/027 G01J5/0025 G03B21/006 G02B27/22 G03B35/24 H05B33/08 H02J7/0027 H02J7/02 F21Y2113/002 Y10S362/806 F21V17/002 F21Y2107/40 F21V3/023 G03B23/00 F21Y2115/30 F21Y2103/37 H01R33/09 A61L9/03 A61L2209/12 F21S10/00 F21V9/00 F21V9/12 F21Y2105/00 F21Y2111/00 H05B33/0803 F21S10/06 F21V1/10 G09F9/33 G09F19/12 G03B21/001 G03B21/26 G03B23/10 H02J7/022 F21S10/02 G09F23/04 F21V23/003 A41G1/005 G02B6/0008 G02B6/001 F21V23/02 F21Y2103/10 F21Y2103/00 G04B47/02 H04N5/332 H04N5/2354 H04N5/23241 H04N5/76 G06T7/004 F21V3/02 F21V17/02 F21V19/006 G03B21/2033 G04B19/30 B60Q3/78 F21W2131/109 H04N5/2257 G03B29/00 F21V5/00 F21V7/00 H02J7/0047 H02J2007/0059 H04N7/181 H02J7/0052 C12M21/12 C10G1/00 C12M23/06 C12M23/46 C12M27/02 C12M27/20 C12M41/40 C10G32/00 H04N5/23296 H04N5/77 H04N1/212 H04N7/188 H04N5/2252 H04N5/2256 H04N5/247 Y02B10/30 F21K9/238 F21V11/08 F21V23/006 F21W2131/30 F21Y2113/10 H02J7/0054 H02J7/35 F21V23/0407 F21Y2115/15 F21V9/083 F21V21/096 F21K9/65 H01R13/665 H01R13/6683 H01R13/7175 H01R13/72 H01R24/60 H01R25/003 H01R33/00 F21V21/0925 F21V7/0008 F21Y2107/90 H01R25/142 H04N7/183 F21S6/003 G01J5/025 G01J5/041 G01J5/089 F21V29/502 F21V29/70 F21V23/0457 F21V23/0464 H01R33/06 F21V33/0004 H02J4/00 H02J7/007 G01V8/20 H04N9/3161 H04N9/3194 F21K9/235 F21V23/0478 F21V21/0824 F21V23/0471 G03B15/05 F21V25/00 G03B2215/0567 G03B2215/0503 F21V21/22 F21V21/30 F21V29/00 F21W2121/00 F21S8/038 F21S9/022 F21V9/08 F21V14/02 F21V23/0492 G01S3/7864 H04N5/2259 H04N5/772 F21V23/0435 G08B13/1966 F21K9/50 F21K9/135 F21K9/30 G09G3/3208 F21V23/008 H04N5/2258 F21V23/009 F21V31/005 F21S6/004 F21S8/033 F21V23/001 G04G99/00 G06K9/00369 G06K9/00771 G06T7/20 G08B13/2491 F21K9/58 F21V25/02 H04N9/315 F21S4/008 H04N9/3141 F21S9/03 F21Y2103/33 H04N7/186 F21Y2113/13 H01R24/76 H01R33/92 H01R2103/00 F21S9/035 F21V33/00 H02J7/00 H02J2007/0062 H05B35/00 H05B37/00 H05B37/0227 H05B37/0281 G03B21/145 G03B21/53 F21S6/00 F21W2131/107 F21V23/04 F21V17/104 F21V17/16 F21V21/088 F21V17/105 F21K9/275 F21V21/005 F21S8/035 F21V21/14 G03B21/2053 G03B21/206 G03B21/208 F21K9/60 F21S6/002 F21S9/02 F21S10/023 F21S10/063 F21V23/06 F21K9/232 F21S4/28 F21S10/002 F21V21/08 F21V21/29 G03B21/142 F21V5/04 F21V13/02 F21V14/003 F21V14/06 F21V23/00 F21V33/0052 F21Y2101/00 G02F1/1313 Y10S362/80 H01R27/02 H01R13/70 H01R13/73 A61L2209/111 A61L2209/133 H02G3/18 G06F2200/261 Y02D10/175 F21K9/23 F21Y2115/10 H04N9/3155 H04N9/317 G02B6/0021 G02B6/0045 F21L2001/00 G03B21/2046 G03B23/08 F21V23/0442 F21V14/006 G06K9/20 G08B13/19619 G08B13/19636 G08B13/19656 G08B13/19695 H04N5/23206 H04N5/33 G06T7/70 G06T2207/30232 C12P5/00

European: A41D27/08B A41G1/00B8 A42B1/24B A43B1/00C10 A43B3/00E A43B3/00E10 A43D999/00 A45C15/06 A61L9/03 B60Q1/26 B60Q3/02Q B60R11/00 B60R13/00 F21K9/00 F21K9/135 F21S10/00 F21S10/00A F21S2/00 F21S4/00E F21S4/00L F21S4/00L6 F21S8/03G1 F21S8/03T F21S9/02 F21S9/02E F21V14/02 F21V21/08 F21V21/14 F21V23/04 F21V29/00 F21V33/00A F21V9/00 F21V9/08 F21V9/12 G02B27/22 G02B6/00L4E G02B6/00L4L G02B6/00L6O4S G03B21/00 G03B21/20 G03B35/24 G09F13/22 G09F19/12 G09F23/00 G09F9/33 H01R13/66D10 H01R25/00D H01R33/06 H01R33/09 H02G3/14 H04M1/05 H04M1/60T2B H05B33/08D K61L209/120 L60R11/00R4A15 L60R13/02R R21S10/06 R21S2/00A R21S8/03G1 R21V1/10 R21V21/22 R21V21/29 R21V21/30 R21V23/04S R21V23/04S8 R21V33/00B R21V9/08 R21W121/00 R21W131/109 R21Y101/02 R21Y103/00 R21Y103/025 R21Y105/00 R21Y111/00 S02B6/00L6I4S4 T01H9/18E T01R103/00 T01R13/66D10 T01R13/713 T01R24/76 Y02B10/30

US: 1/1 29/595 29/825 307/31 313/498 313/511 313/512 315/155 315/160 315/250 315/287 315/314 315/317 315/32 315/86 320/111 340/472 345/77 348/142 348/143 348/151 348/159 348/169 348/207.1 348/372 348/373 348/744 348/E5.024 348/E5.026 348/E5.043 348/E5.09 348/E7.085 348/E9.025 349/5 349/62 352/133 353/10 353/101 353/103 353/119 353/122 353/43 353/62 353/7 353/85 353/87 353/95 359/15 359/32 362/101 362/103 362/104 362/108 362/109 362/135 362/145 362/149 362/157 362/158 362/183 362/184 362/190 362/20 362/217.13 362/219 362/221 362/225 362/23 362/23.01 362/23.19 362/231 362/232 362/233 362/234 362/235 362/238 362/241 362/249 362/249.01 362/249.02 362/249.03 362/249.06 362/249.07 362/249.09 362/249.11 362/249.12 362/250 362/251 362/253 362/257 362/259 362/267 362/269 362/276 362/277 362/280 362/281 362/285 362/294 362/295 362/296.01 362/298 362/3 362/311 362/311.01 362/311.02 362/311.03 362/311.13 362/338 362/34 362/35 362/362 362/369 362/372 362/375 362/382 362/390 362/394 362/397 362/404 362/421 362/427 362/457 362/487 362/555 362/562 362/565 362/603 362/640 362/641 362/642 362/643 362/644 362/645 362/646 362/647 362/648 362/659 362/8 362/800 362/806 362/84 362/85 362/86 362/87 362/88 362/92 362/95 362/96 362/97.1 363/178 368/10 368/223 368/227 368/242 368/278 368/67 368/80 368/82 368/84 396/155 435/299.1 439/11 439/131 439/165 439/31 439/490 439/502 439/536 439/6 439/638 439/8 713/300

Family:

Publication number	Publication date	Application number	Application date
US2003231485 AA	20031218	US20020170584	20020614
US2003231486 AA	20031218	US20020286820	20021104
US2003231487 AA	20031218	US20020286871	20021104
US2004022052 AA	20040205	US20030341519	20030114
US2004046502 AA	20040311	US20030621513	20030718
US2004145300 AA	20040729	US20030667787	20030923
US2004264166 AA	20041230	US20020285451	20021101
US2005018417 AA	20050127	US20040883741	20040706

US2005918459 AA	20050127	US20040883747	20040706
US2005233633 AA	20051020	US20050152063	20050615
US2006007668 AA	20060112	US20040883719	20040706
US2006007670 AA	20060112	US20040902123	20040730
US2006018110 AA	20060126	US20050184771	20050720
US2006072302 AA	20060406	US20040954189	20041001
US2006072346 AA	20060406	US20050094155	20050331
US2006073731 AA	20060406	US20050094156	20050331
US2006152946 AA	20060713	US20050255981	20051024
US2006221617 AA	20061005	US20050094215	20050331
US2006227573 AA	20061012	US20050092741	20050330
US2006227574 AA	20061012	US20050092742	20050330
US2007076437 AA	20070405	US20060498874	20060804
US2007076438 AA	20070405	US20060498881	20060804
US2007076439 AA	20070405	US20060527629	20060927
US2007076440 AA	20070405	US20060527628	20060927
US2007081423 AA	20070412	US20060527631	20060927
US2007236931 AA	20071011	US20070806711	20070604
US2007242485 AA	20071018	US20070806285	20070531
US2008205060 AA	20080828	US20080003809	20080102
US2008212323 AA	20080904	US20080073095	20080229
US2008253121 AA	20081016	US20080007076	20080107
US2008259615 AA	20081023	US20080149964	20080512
US2008259632 AA	20081023	US20070003691	20071231
US2008266856 AA	20081030	US20080073889	20080311
US2008304289 AA	20081211	US20070806284	20070531
US2009011627 AA	20090108	US20080232035	20080910
US2009016054 AA	20090115	US20080232505	20080918
US2009059606 AA	20090305	US20080149963	20080512
US2009135380 AA	20090528	US20080292153	20081112
US2009147526 AA	20090611	US20080292580	20081121
US2009175033 AA	20090709	US20080318473	20081230
US2009175042 AA	20090709	US20080318471	20081230
US2009273927 AA	20091105	US20090502661	20090714
US2009284960 AA	20091119	US20080318470	20081230
US2009310383 AA	20091217	US20090546012	20090824
US2010033990 AA	20100211	US20090566322	20090924
US2010097897 AA	20100422	US20090545992	20090824
US2010128497 AA	20100527	US20090622000	20091119
US2010213849 AA	20100826	US20100711456	20100224
US2010213879 AA	20100826	US20100710918	20100223
US2010213880 AA	20100826	US20100710561	20100223
US2010214541 AA	20100826	US20090624621	20091124
US2010277089 AA	20101104	US20100771003	20100430
US2010277952 AA	20101104	US20100834435	20100712
US2011007496 AA	20110113	US20100886832	20100921
US2011013385 AA	20110120	US20100887700	20100922
US2011013398 AA	20110120	US20100894865	20100930
US2011019504 AA	20110127	US20100894782	20100930
US2011051405 AA	20110303	US20100940255	20101105
US2011063587 AA	20110317	US20100876507	20100907
US2011085323 AA	20110414	US20100914584	20101028
US2011090470 AA	20110421	US20100907443	20101019
US2011122370 AA	20110526	US20110021107	20110204
US2011164415 AA	20110707	US20110019331	20110202
US2011287665 AA	20111124	US20110117227	20110527
US2011305056 AA	20111215	US20110161643	20110616
US2012057370 AA	20120308	US20110295562	20111114
US2012105814 AA	20120503	US20100938564	20101103
US2012106202 AA	20120503	US20100938628	20101103
US2012120243 AA	20120517	US20110295301	20111114
US2012127692 AA	20120524	US20100951501	20101122
US2012127708 AA	20120524	US20100950017	20101119
US2012127759 AA	20120524	US20100948953	20101118
US2012218407 AA	20120830	US20110296469	20111115
US2012218421 AA	20120830	US20110296508	20111115
US2012218781 AA	20120830	US20120367816	20120207
US2012268668 AA	20121025	US20120540689	20120703
US2012268947 AA	20121025	US20120534611	20120627
US2012269041 AA	20121025	US20120428086	20120323
US2012320594 AA	20121220	US20110162824	20110617
US2012327642 AA	20121227	US20120606375	20120907
US2013003417 AA	20130103	US20120534281	20120627
US2013021795 AA	20130124	US20120540728	20120703
US2013201668 AA	20130808	US20120367758	20120207
US2013201673 AA	20130808	US20120367687	20120207
US2014098519 AA	20140410	US20130105607	20131213

US2014104839 AA	20140417	US20130105737	20131213
US2014139120 AA	20140522	US20130049427	20131009
US2014168985 AA	20140619	US20140189162	20140225
US2014218927 AA	20140807	US20130144703	20131231
US2014232877 AA	20140821	US20140265738	20140430
US2014307439 AA	20141016	US20130863073	20130415
US2014320663 AA	20141030	US20140265838	20140430
US2014340894 AA	20141120	US20140280865	20140519
US2014341003 AA	20141120	US20140252102	20140414
US2014362559 AA	20141211	US20130910295	20130605
US2014375532 AA	20141225	US20130923721	20130621
US2015070595 AA	20150312	US20140275184	20140512
US2015070886 AA	20150312	US20140323318	20140703
US2015070896 AA	20150312	US20140548620	20141120
US2015070897 AA	20150312	US20140289968	20140529
US2015070936 AA	20150312	US20130023889	20130911
US2015070937 AA	20150312	US20140451822	20140805
US2015070938 AA	20150312	US20140539267	20141112
US2015082057 AA	20150319	US20140548561	20141120
US2015131326 AA	20150514	US20150604206	20150123
US2015159843 AA	20150611	US20150622628	20150213
US2015176826 AA	20150625	US20150643026	20150310
US2015211701 AA	20150730	US20140503647	20141001
US2015233548 AA	20150820	US20150606242	20150127
US2015271375 AA	20150924	US20150728369	20150602
US2015276178 AA	20151001	US20150737434	20150611
US2015340826 AA	20151126	US20150817675	20150804
US2015354767 AA	20151210	US20150829114	20150818
US2015354792 AA	20151210	US20150829213	20150818
US2015377467 AA	20151231	US20150844314	20150903
US2016003429 AA	20160107	US20150739397	20150615
US2016003430 AA	20160107	US20150739499	20150615
US2016003431 AA	20160107	US20150739666	20150615
US2016025316 AA	20160128	US20150875675	20151005
US2016069523 AA	20160310	US20150729380	20150603
US2016091196 AA	20160331	US20150870601	20150930
US2016097499 AA	20160407	US20150967862	20151214
US2016097500 AA	20160407	US20150968153	20151214
US2016097522 AA	20160407	US20150858538	20150918
US2016097525 AA	20160407	US20150834823	20150825
US2016099595 AA	20160407	US20150833935	20150824
US2016099596 AA	20160407	US20150834557	20150825
US2016100086 AA	20160407	US20150863553	20150924
US2016153650 AA	20160602	US20150951872	20151125
US2016173746 AA	20160616	US20150793209	20150707
US2016186973 AA	20160630	US20150827810	20150817
US2016209013 AA	20160721	US20150943645	20151117
US2016211682 AA	20160721	US20150979747	20151228
US2016215962 AA	20160728	US20150983993	20151230
US2016313636 AA	20161027	US20150944953	20151118
US2017006204 AA	20170105	US20160268125	20160916
US2017023851 AA	20170126	US20150968250	20151214
US2017038031 AA	20170209	US20160296599	20161018
US2017054315 AA	20170223	US20150834613	20151110
US2017059132 AA	20170302	US20160348218	20161110
US2017130182 AA	20170511	US20170413387	20170123
US2017175996 AA	20170622	US20160390783	20161227
US2017184283 AA	20170629	US20170458498	20170314
US2017241596 AA	20170824	US20160341782	20161102
US2017244934 AA	20170824	US20170453270	20170308
US2017321850 AA	20171109	US20160355515	20161118
US2017321853 AA	20171109	US20170466196	20170322
US2017329211 AA	20171116	US20160170071	20160601
US2017339755 AA	20171123	US20170452122	20170307
US2017363262 AA	20171221	US20170689381	20170829
US2017363276 AA	20171221	US20170472698	20170329
US2018013986 AA	20180111	US20170494777	20170424
US2018023785 AA	20180125	US20170402965	20170110
US2018067384 AA	20180308	US20170685701	20170824
US2018128448 AA	20180510	US20170730350	20171011
US2018231199 AA	20180816	US20170816260	20171117
US2018249054 AA	20180830	US20180901251	20180221
US2018275500 AA	20180927	US20180995423	20180601
US2018299084 AA	20181018	US20180009762	20180615
US2018332204 AA	20181115	US20180972798	20180507
US2019011818 AA	20190110	US20180128049	20180911

US2019113191 AA	20190418	US20180032664	20180711
US2019120450 AA	20190425	US20180134496	20180918
US2019195445 AA	20190627	US20190285631	20190226
US6945663 BB	20050920	US20030341519	20030114
US6976762 BB	20051220	US20020286871	20021104
US7232251 BB	20070619	US20050092741	20050330
US7318653 BB	20080115	US20050094156	20050331
US7364315 BB	20080429	US20020170584	20020614
US7455444 BB	20081125	US20050255981	20051024
US7568829 BB	20090804	US20060498881	20060804
US7611253 BB	20091103	US20060527628	20060927
US7618150 BB	20091117	US20070806711	20070604
US7632004 BB	20091215	US20070806284	20070531
US7651365 BB	20100126	US20050152063	20050615
US7677745 BB	20100316	US20050184771	20050720
US7722230 BB	20100525	US20080149963	20080512
US7726839 BB	20100601	US20070003691	20071231
US7726841 BB	20100601	US20080007076	20080107
US7726869 BB	20100601	US20080073095	20080229
US7810985 BB	20101012	US20050094155	20050331
US7824185 BB	20101102	US20080232035	20080910
US7832917 BB	20101116	US20080232505	20080918
US7832918 BB	20101116	US20080318473	20081230
US7871192 BB	20110118	US20080292153	20081112
US7901115 BB	20110308	US20080149964	20080512
US7909477 BB	20110322	US20050094215	20050331
US7997785 BB	20110816	US20050092742	20050330
US8002456 BB	20110823	US20080318471	20081230
US8029182 BB	20111004	US20090546012	20090824
US8083376 BB	20111227	US20100711456	20100224
US8083377 BB	20111227	US20100876507	20100907
US8083392 BB	20111227	US20100887700	20100922
US8128274 BB	20120306	US20100907443	20101019
US8164984 BB	20120424	US20090545992	20090824
US8231246 BB	20120731	US20100940255	20101105
US8231260 BB	20120731	US20110019331	20110202
US8277087 BB	20121002	US20100710918	20100223
US8289814 BB	20121016	US20100894782	20100930
US8303150 BB	20121106	US20090624621	20091124
US8303158 BB	20121106	US20100710561	20100223
US8305846 BB	20121106	US20080292580	20081121
US8342732 BB	20130101	US20090502661	20090714
US8393755 BB	20130312	US20100894865	20100930
US8408736 BB	20130402	US20100771003	20100430
US8434927 BB	20130507	US20090622000	20091119
US8511877 BB	20130820	US20120540689	20120703
US8545090 BB	20131001	US20060527629	20060927
US8562158 BB	20131022	US20110296508	20111115
US8702245 BB	20140422	US20110021107	20110204
US8711216 BB	20140429	US20110296469	20111115
US8714799 BB	20140506	US20120534611	20120627
US8721160 BB	20140513	US20100914584	20101028
US8760514 BB	20140624	US20110295301	20111114
US8783936 BB	20140722	US20110161643	20110616
US8811122 BB	20140819	US20120428086	20120323
US8827511 BB	20140909	US20080073889	20080311
US8834009 BB	20140916	US20120540728	20120703
US8911137 BB	20141216	US20130105737	20131213
US8915608 BB	20141223	US20130105607	20131213
US8931947 BB	20150113	US20140189162	20140225
US8944669 BB	20150203	US20120367816	20120207
US8950899 BB	20150210	US20110162824	20110617
US8960988 BB	20150224	US20120534281	20120627
US8967831 BB	20150303	US20120367758	20120207
US8998462 BB	20150407	US20100950017	20101119
US9010986 BB	20150421	US20130049427	20131009
US9033569 BB	20150519	US20100951501	20101122
US9097413 BB	20150804	US20150622628	20150213
US9128692 BB	20150908	US20140252102	20140414
US9157589 BB	20151013	US20100948953	20101118
US9163799 BB	20151020	US20150604206	20150123
US9182111 BB	20151110	US20140548620	20141120
US9197865 BB	20151124	US20140265838	20140430
US9239513 BB	20160119	US20100938564	20101103
US9338836 BB	20160510	US20130923721	20130621
US9541260 BB	20170110	US20150606242	20150127

US9549110 BB	20170117	US20150793209	20150707
US9551477 BB	20170124	US20140289968	20140529
US9560322 BB	20170131	US20140265738	20140430
US9581299 BB	20170228	US20140280865	20140519
US9593815 BB	20170314	US20150829114	20150818
US9625134 BB	20170418	US20120367687	20120207
US9648672 BB	20170509	US20150729380	20150603
US9719654 BB	20170801	US20140503647	20141001
US9732921 BB	20170815	US20130910295	20130605
US9787885 BB	20171010	US20150728369	20150602
US9832430 BB	20171128	US20160268125	20160916
US9838652 BB	20171205	US20170453270	20170308
US9845948 BB	20171219	US20160390783	20161227
US9909739 BB	20180306	US20150983993	20151230
US9970608 BB	20180515	US20170689381	20170829
US10045405 BB	20180807	US20170452122	20170307
US10047922 BB	20180814	US20140451822	20140805
US10066798 BB	20180904	US20110295562	20111114
US10151451 BB	20181211	US20170402965	20170110
US10184624 BB	20190122	US20150739397	20150615
US10184649 BB	20190122	US20150858538	20150918
US10222015 BB	20190305	US20140323318	20140703
US10228112 BB	20190312	US20160296599	20161018
US10230880 BB	20190312	US20180972798	20180507
US10260735 BB	20190416	US20150834823	20150825
US10264170 BB	20190416	US20180901251	20180221
US10323808 BB	20190618	US20150968153	20151214
US10323811 BB	20190618	US20130023889	20130911
US10326921 BB	20190618	US20150863553	20150924
US10329523 BB	20190625	US20170413387	20170123

Priority:

US20020094155	20020308	US20020094156	20020308	US20020170584	20020614
US20020285451	20021101	US20020286871	20021104	US20020286820	20021104
US20030341519	20030114	US20030621513	20030718	US20030667787	20030923
US20040883719	20040706	US20040883747	20040706	US20040883741	20040706
US20040902123	20040730	US20040954189	20041001	US20050092742	20050330
US20050092741	20050330	US20050094215	20050331	US20050094156	20050331
US20050094155	20050331	US20050152063	20050615	US20050184771	20050720
US20050255981	20051024	US20060498874	20060804	US20060498881	20060804
US20060527628	20060927	US20060527629	20060927	US20060527631	20060927
US20060566322	20061204	US20070572631	20070124	US20070806285	20070531
US20070806284	20070531	US20070806286	20070531	US20070806711	20070604
US20070883747	20070806	US20070003691	20071231	US20080003809	20080102
US20080007076	20080107	US20080073095	20080229	US20080073889	20080311
US20080149963	20080512	US20080149964	20080512	US20080232035	20080910
US20080232505	20080918	US20080292153	20081112	US20080292580	20081121
US20080318471	20081230	US20080318470	20081230	US20080318473	20081230
US20090502661	20090714	US20090527629	20090818	US20090527628	20090818
US20090527631	20090818	US20090545992	20090824	US20090546012	20090824
US20090566322	20090924	US20090622000	20091119	US20090622100	20091119
US20090624621	20091124	US20100710918	20100223	US20100710561	20100223
US20100711456	20100224	US20100771003	20100430	US20100834435	20100712
US20100866832	20100809	US20100876507	20100907	US20100886832	20100921
US20100887700	20100922	US20100887709	20100922	US20100924621	20100930
US20100894782	20100930	US20100894865	20100930	US20100907443	20101019
US20100914584	20101028	US20100938564	20101103	US20100938628	20101103
US20100940255	20101105	US20100948953	20101118	US20100950017	20101119
US20100951501	20101122	US20110019331	20110202	US20110021107	20110204
US20110117227	20110527	US20110161643	20110616	US20110162824	20110617
US20110552115P	20111027	US20110295301	20111114	US20110295562	20111114
US20110296469	20111115	US20110296508	20111115	US20110338883	20111228
US20120367816	20120207	US20120367758	20120207	US20120367687	20120207
US20120428086	20120323	US20120534611	20120627	US20120534281	20120627
US20120540689	20120703	US20120540728	20120703	US20120540729	20120703
US20120606375	20120907	US20130858604	20130408	US20130863073	20130415
US20130870253	20130425	US20130910295	20130605	US20130923721	20130621
US20130023889	20130911	US20130049427	20131009	US20130105607	20131213
US20130105737	20131213	US20130144703	20131231	US20140189162	20140225
US20140252102	20140414	US20140265838	20140430	US20140265738	20140430
US20140275184	20140512	US20140280865	20140519	US20140289968	20140529
US20140323318	20140703	US20140451822	20140805	US20140503647	20141001
US20140539267	20141112	US20140548561	20141120	US20140548620	20141120
US20150604206	20150123	US20150604204	20150123	US20150606242	20150127
US20150606642	20150127	US20150622628	20150213	US20150642169	20150309
US20150643026	20150310	US20150165103P	20150521	US20150728369	20150602
US20150729380	20150603	US20150737434	20150611	US20150739499	20150615
US20150739397	20150615	US20150739666	20150615	US20150793262	20150707
US20150793209	20150707	US20150817675	20150804	US20150827810	20150817
US20150829114	20150818	US20150829213	20150818	US20150829215	20150818
US20150833935	20150824	US20150834823	20150825	US20150834557	20150825
US20150844314	20150903	US20150858538	20150918	US20150863553	20150924
US20150870601	20150930	US20150875675	20151005	US20150834613	20151110
US20150943645	20151117	US20150944953	20151118	US20150951872	20151125
US20150968153	20151214	US20150967862	20151214	US20150968250	20151214
US20150968862	20151214	US20150979747	20151228	US20150983993	20151230
US20160170071	20160601	US20160268125	20160916	US20160296599	20161018

US20160341782	20161102	US20160348218	20161110	US20160355515	20161118
US20160390783	20161227	US20170402965	20170110	US20170413387	20170123
US20170452122	20170307	US20170453270	20170308	US20170458498	20170314
US20170466196	20170322	US20170472698	20170329	US20170494477	20170422
US20170494777	20170424	US20170685701	20170824	US20170689381	20170829
US20170730350	20171011	US20170730291	20171011	US20170816260	20171117
US20180901251	20180221	US20180972798	20180507	US20180995423	20180601
US20180009762	20180615	US20180032664	20180711	US20180128049	20180911
US20180134496	20180918	US20190242761	20190108	US20190285631	20190226

Probable Assignee: TORMACH LLC

Assignee(s): (std)**:** CHIEN TAENG LU ; CHIEN TSENG L ; CHIEN TSENG LU ; TORMACH LLC ; WALLAGE RAYMOND ROGER

Inventor(s): (std)**:** CHIEN TAENG LU ; CHIEN TSENG L ; WALLAGE RAYMOND ROGER ; CHIEN TSENG LU

Inventor(s): CHIEN TSENG

Agent(s): BACON AND THOMAS PLLC; ROBERT; NAECKEL ARNO