**1) Family number: 43347131** (WO10103276A1)

**Title:** PLANT FRAME AND METHOD

**Abstract:** A plant frame (2) consists of an array of cells (8), each for containing compost for propagating a plant. The frame can be either stacked on or nested with a similar frame. The frame is provided with a stacking apparatus (50, 52, 54, 56, 58, 60, 62, 64) comprising a stacking abutment (32) spaced beneath an upper surface (10) of the frame, and a corresponding opening (34) defined in the upper surface of the frame above the stacking abutment. When the frame is placed on top of the similar frame in a nesting orientation of the frame relative to the similar frame, the stacking abutment passes through the corresponding opening in the upper surface of the similar frame, and the frames nest with their upper surfaces relatively closely spaced one above the other. When the frame is placed on top of the similar frame in a stacking orientation of the frame relative to the similar frame, the stacking abutment seats on a seat portion of the similar frame, so that the frames stack with their upper surfaces further apart than when they are nested.

**Classifications:**
**International** (IPC 8-9): A01G9/02 A01G9/10 B65D21/04 (Advanced/Invention); A01G9/02 A01G9/10 B65D21/04 (Core/Invention)
**CPC:** A01G9/0295
**European:** A01G9/02G A01G9/10G

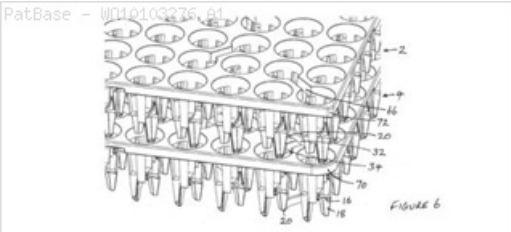


**Family:**

| Publication number | Publication date | Application number | Application date |
|---|---|---|---|
| GB200904420 A0 | 20090429 | GB20090004420 | 20090313 |
| WO10103276 A1 | 20100916 | WO2010GB00435 | 20100311 |

**Priority:**
GB20090004420 20090313

**Probable Assignee:** COOLEY JOHN N
**Assignee(s):** (std): COOLEY JOHN N ; COOLEY JOHN NEWSOME
**Inventor(s):** (std): COOLEY JOHN NEWSOME
**Agent(s):** GOODMAN SIMON JOHN NYE
**Designated states:** AE AG AL AM AO AT AU AZ BA BB BE BF BG BH BJ BR BW BY BZ CA CF CG CH CI CL CM CN CO CR CU CY CZ DE DK DM DO DZ EC EE EG ES FI FR GA GB GD GE GH GM GN GQ GR GT GW HN HR HU ID IE IL IN IS IT JP KE KG KM KN KP KR KZ LA LC LK LR LS LT LU LV LY MA MC MD ME MG MK ML MN MR MT MW MX MY MZ NA NE NG NI NL NO NZ OM PE PG PH PL PT RO RS RU SC SD SE SG SI SK SL SM SN ST SV SY SZ TD TG TH TJ TM TN TR TT TZ UA UG US UZ VC VN ZA ZM ZW

**2) Family number: 48960423** (US2012036773A)

**Title:** FLOATABLE PLANT GROWTH SYSTEM AND A FLOATATION TRAY FOR USE WITH THE SYSTEM

**Abstract:** A floatable plant growth system is provided. The system comprises an upper tray (10) and a lower tray (20). The upper tray has a plurality of downwardly tapering cells (11) for receiving plant growth material, with each of the plant cells having an opening (13) at its bottom. The lower tray has a plurality of upwardly tapering cells (21) that trap air, enabling the system to float in use. The upper tray is removably mateable with the lower tray such that the plant cells of the upper tray are located in the space (27) between the air cells of the lower tray. The lower tray is provided with a plurality of openings (26). When the upper and lower trays are mated together and placed in a body of liquid, liquid enters the mated tray configuration (10, 20) through the openings (26) of the lower tray, fills the space (27) that is below the plant cells (11) between the air cells (21) of the lower tray, and in use may be taken up through the bottom opening (13) of each upper tray plant cell.

**Classifications:**
**International** (IPC 8-9): A01G31/02 A01G9/00 A01G9/02 A01G9/10 (Advanced/Invention)
**International** (IPC 1-7): A01G31/06
**CPC:** A01G31/02 A01G9/00 Y02A40/226 A01G9/02 A01G9/029 A01G31/06 A01G9/0295
**European:** A01G9/00 A01G9/10G
**US:** 47/59R 47/65.7 47/65.700P 47/65.9 47/65.900S 47/66.7

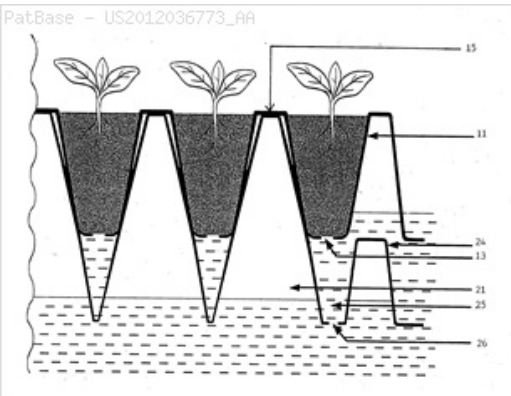


**Family:**

| Publication number | Publication date | Application number | Application date |
|---|---|---|---|
| AR079046 AA | 20111221 | AR2010P104231 | 20101116 |
| BRPI1014312 A2 | 20160405 | BR2010PI14312 | 20100819 |

| | | | |
|---|---|---|---|
| CN102378572 A | 20120314 | CN201080015015 | 20100819 |
| CN102378572 B | 20140416 | CN201080015015 | 20100819 |
| EP2501218 A1 | 20120926 | EP20100831837 | 20100819 |
| EP2501218 A4 | 20130501 | EP20100831837 | 20100819 |
| KR20120102595 A | 20120918 | KR20127008994 | 20100819 |
| MY148324 A | 20130329 | MY20090004892 | 20091118 |
| US2012036773 AA | 20120216 | US20100262225 | 20100819 |
| US8910418 BB | 20141216 | US20100262225 | 20100819 |
| WO11062470 A1 | 20110526 | WO2010MY00148 | 20100819 |

**Priority:**

MY20090004892 20091118 WO2010MY00148 20100819

**Probable Assignee:** QIU JIZONG

**Assignee(s):** (std): CHONG KHOO KHAY ; KHOO KHAY CHONG ; QIU JIZONG

**Assignee(s):** KHAY CHONG KHOO

**Inventor(s):** (std): KHOO KHAY CHONG ; CHONG KHOO KHAY

**Inventor(s):** KHAY CHONG KHOO

**Agent(s):** TOENHARDT MARION; MARTINE PENILLA GROUP LLP; OON YEN YEN ET AL

**Designated states:** AE AG AL AM AO AT AU AZ BA BB BE BF BG BH BJ BR BW BY BZ CA CF CG CH CI CL CM CN CO CR CU CY CZ DE DK DM DO DZ EC EE EG ES FI FR GA GB GD GE GH GM GN GQ GR GT GW HN HR HU ID IE IL IN IS IT JP KE KG KM KN KP KR KZ LA LC LI LK LR LS LT LU LV LY MA MC MD ME MG MK ML MN MR MT MW MX MY MZ NA NE NG NI NL NO NZ OM PE PG PH PL PT RO RS RU SC SD SE SG SI SK SL SM SN ST SV SY SZ TD TG TH TJ TM TN TR TT TZ UA UG US UZ VC VN ZA ZM ZW

**3) Family number: 11496204** (US6266921B)

© PatBase

**Title:** CELL AND CELL TRAY FOR GROWING SEEDLINGS

**Abstract:** Cultivation cell for seedlings and a tray formed from such cells, comprising apertures breaking the cell upper rims. Thereby growth disturbancies in roots growing close to the substrate surface are prevented. The tray comprises air channels, and growth of surface roots across the upper apertures from one cell to another is prevented by structural elements giving the tray rigidity.

**Classifications:**
**International** (IPC 8-9): A01G9/10 (Advanced/Invention); A01G9/10 (Core/Invention)
**International** (IPC 1-7): A01G A01G9/02 A01G9/10
**CPC:** A01G9/0295
**European:** A01G9/10F A01G9/10G
**US:** 47/86 47/860 47/87

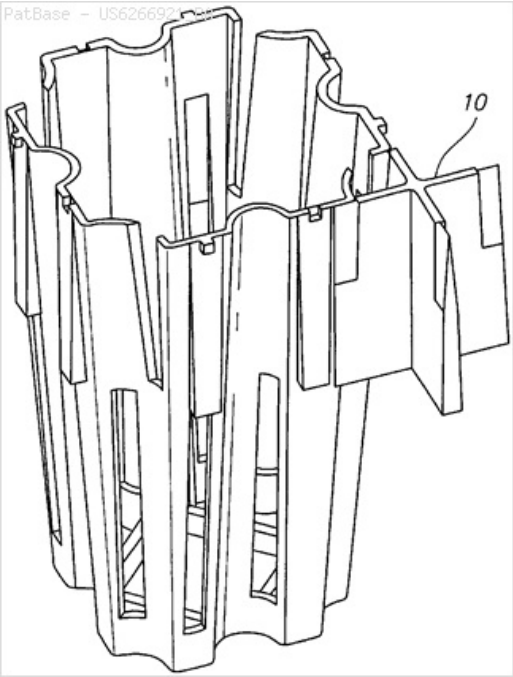


**Family:**

| Publication number | Publication date | Application number | Application date |
|---|---|---|---|
| AU199942411 A1 | 20000224 | AU19990042411 | 19990730 |
| AU199942411 A5 | 20000224 | AU19990042411 | 19990730 |
| AU209942411 A1 | 20000224 | AU19990042411 | 19990730 |
| AU763871 B2 | 20030731 | AU19990042411 | 19990730 |
| CA2279010 AA | 20000131 | CA19992279010 | 19990723 |
| FI109867 B | 20021031 | FI19980001684 | 19980731 |
| FI981684 A | 20000201 | FI19980001684 | 19980731 |
| FI981684 A0 | 19980731 | FI19980001684 | 19980731 |
| NZ336935 A | 20001027 | NZ19990336935 | 19990727 |
| SE518241 C2 | 20020910 | SE19990002689 | 19990714 |
| SE9902689 A | 20000201 | SE19990002689 | 19990714 |
| SE9902689 A0 | 19990714 | SE19990002689 | 19990714 |
| SE9902689 L | 20000201 | SE19990002689 | 19990714 |
| US6266921 BA | 20010731 | US19990363109 | 19990730 |

**Priority:**

FI19980001684 19980731 CA19992279010 19990723

**Probable Assignee:** LANNEN TEHTAAT OYJ

**Assignee(s):** (std): LAENNEN TEHTAAT OYJ ; LANNEN TEHTAAT OYJ ; OYJ LANNEN TEHTAAT
**Assignee(s):** KESKILOHKO ALTTI ; LANNEN TEHTAAT OYJ PLANT SYSTEMS PL ; LANNEN TEHTAAT OY
**Inventor(s):** (std): KESKILOHKO ALTTI
**Inventor(s):** ALTTI KESKILOHKO
**Agent(s):** FB RICE; FB RICE PTY LTD; MCFADDEN FINCHAM; OSLER HOSKIN AND HARCOURT LLP

**4) Family number: 13750184** (US5459960A)

© PatBase

**Title:** NURSERY CONTAINER

**Abstract:** A nursery container that provides an improved root structure for plants intended to be transplanted into the ground. This container is characterized by a base that is constructed to direct initial root growth towards an elevated opening that is centrally located in the base. It is through this opening where initial root growth is air pruned thus encouraging the early development of secondary lateral roots. The base design also serves to aerate the growing medium in the center of the container thus aiding in the reduction of medium compacting and drainage. This container is also characterized by a plurality of vertical indentations that protrude towards the periphery of the container, each one being open at the bottom. Because of these indentations the root tips are encouraged to grow down towards the openings for air pruning thus continuing the development of lateral roots. The indentations also serve to aerate the growing medium in the sidewall area. Furthermore this improved nursery container is designed to compensate for material thinning which is a characteristic of all thermoformed products. It also compensates for the limitations placed on nursery container design by the production method of blowmolding plastic containers.

**Classifications:**
**International** (IPC 8-9): A01G9/10 B29C51/02 B29C51/04 B29C51/22 B29C51/44 (Advanced/Invention); B29C47/00 B29C51/10 (Advanced/Non-invention); B29C51/00 B29C51/18 B29C51/26 (Core/Invention); B29C47/00 (Core/Non-invention)
**International** (IPC 1-7): A01G9/02 B29C51/02 B29C51/10 B29C51/22 B29C51/44
**CPC:** B29C51/10 B29C51/225 A01G9/029 A01G24/60 B29C48/00 B29C48/08 B29C48/09 B29C48/10 B29C48/07 B29C51/02 B29C51/04 B29C51/22 B29C51/44 B29C2791/006 B29C2793/009 B29C49/4284
**European:** A01G9/10 A01G9/10B B29C51/02 B29C51/04 B29C51/22 B29C51/22B B29C51/44 L29C47/00 L29C51/02 L29C51/10 L29C791/00E4 L29C793/00J
**US:** 264/334 264/37.32 264/550 264/551 264/555 425/183 425/326.1 425/387.1 425/388 425/443 47/65.5 47/66 47/73

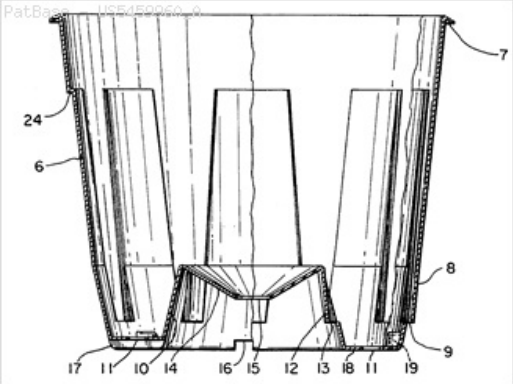


**Family:**

| Publication number | Publication date | Application number | Application date |
|---|---|---|---|
| AT226881 E | 20021115 | AT19990909473T | 19990219 |
| CA2321921 AA | 20000822 | CA19992321921 | 19990219 |
| CA2321921 C | 20050823 | CA19992321921 | 19990219 |
| CN1291935 A | 20010418 | CN19998003243 | 19990219 |
| DE69903712 D1 | 20021205 | DE19996003712 | 19990219 |
| DE69903712 D1 | 20021205 | DE19996003712T | 19990219 |
| DE69903712 T2 | 20031016 | DE19996003712T | 19990219 |
| EP1058614 A1 | 20001213 | EP19990909473 | 19990219 |
| EP1058614 B1 | 20021030 | EP19990909473 | 19990219 |
| ES2189398 T3 | 20030701 | ES19990909473T | 19990219 |
| US5459960 A | 19951024 | US19940266564 | 19940628 |
| US5761848 A | 19980609 | US19950498664 | 19950703 |
| US5783229 A | 19980721 | US19940312090 | 19940926 |
| US6086800 A | 20000711 | US19980164493 | 19980223 |
| WO9942278 A1 | 19990826 | WO1999US01491 | 19990219 |

**Priority:**

US19930120955 19930915 US19940266564 19940628 US19940312090 19940926
US19950498664 19950703 US19980164493 19980223 WO1999US01491 19990219

**Probable Assignee:** INT CONTAINER CORP
**Assignee(s):** (std): ICON ENGINEERING INC ; INT CONTAINER CORP ; MANLOVE STEVEN F ; STEVEN F MANLOVE
**Assignee(s):** INTIONAL CONTAINER CORP ; MANLOVE STEVE ; INTERNATIONAL CONTAINER CORP
**Inventor(s):** (std): MANLOVE STEVEN F ; MANLOVE STEVE
**Inventor(s):** STEVEN F MANLOVE
**Agent(s):** OGILVY RENAULT LLP SENCRL SRL
**Designated states:** AT BE CA CH CN CY DE DK ES FI FR GB GR IE IT JP LI LU MC MX NL PT SE

**5) Family number: 31831884** (NZ532359A)

© PatBase

**Title:** TRAY CONTAINER FOR USE WITH CUTTINGS

**Abstract:** A compartment for use with plant cutting, the compartment having a top opening and a smaller bottom opening, with the distance between the openings defining the depth of the compartment. Each compartment having an internal wall, wherein at least a section of the wall is tapered towards the bottom opening, the internal wall including a plurality of root guides, each guide comprising a downwardly orientated ridge and a lateral wall segment that extends along at least a portion of the ridge at or near the apex of the ridge, the internal wall of each compartment also including a plurality of downwardly orientated elongate slots, the slots being located between the apexes of ridges.

**Classifications:**
**International** (IPC 8-9): A01G9/02 A01G9/10 B65D1/36 B65D21/032

B65D85/52 (Advanced/Invention);
A01G9/02 A01G9/10 B65D1/34 B65D21/032
B65D85/52 (Core/Invention)
**International (IPC 1-7):** A01G9/02 A01G9/10 B65D85/52

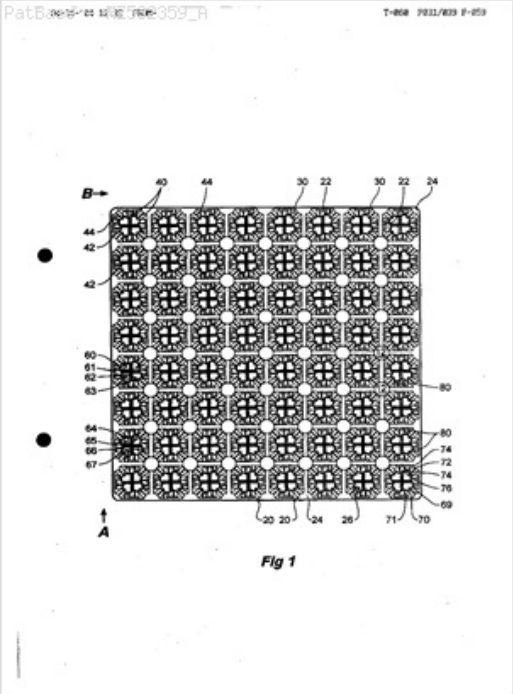


**Family:**

| Publication number | Publication date | Application number | Application date |
|---|---|---|---|
| AU2003903182 A0 | 20030710 | AU20030903182 | 20030623 |
| AU2004201547 AA | 20050113 | AU20040201547 | 20040414 |
| AU2004201547 BB | 20100325 | AU20040201547 | 20040414 |
| NZ532359 A | 20050930 | NZ20040532359 | 20040416 |

**Priority:**

AU20030903182 20030623 AU20040201547 20040414

**Probable Assignee:** TRANSPLANT SYSTEMS LTD

**Assignee(s):** (std)**:** TRANSPLANT SYSTEMS LTD

**Assignee(s):** TRANSPLANT SYSTEMS LIMITED

**Inventor(s):** (std)**:** ROGERS ALAN

**Inventor(s):** ALAN ROGERS

**Agent(s):** DAVIES COLLISON CAVE PTY LTD; DAVIES COLLISON CAVE

**6) Family number: 10936222** (WO9823143A1) © PatBase

**Title:** HORTICULTURAL CONTAINER AND METHOD OF USE

**Abstract:** A biodegradable pot (10) of castellated design such that a vertical groove (11) is formed in each external wall, with a corresponding vertical rib (12) being defined by the internal wall, the internal vertical ribs (12) serving to partially separate adjacent columnar spaces (14) and prevent root coiling. A central columnar tap root space (15) extends to the base wall (16) of the pot which comprises an elevated inner surface (17) supported on footings (18) in each corner which raise the inner surface (17) of the pot (10) off the ground thereby facilitating drainage through drainage apertures (19). Horizontal slots (20) are formed in the walls adjacent to the base wall (16), whereby root growth appears through these slots (20) or apertures as a visual indication that the plant should be re-potted.

**Classifications:**
**International (IPC 8-9):** A01G9/02 A01G9/10 (Advanced/Invention);
A01G9/02 A01G9/10 (Core/Invention)
**International (IPC 1-7):** A01G9/02
**CPC:** A01G9/021 A01G9/0291
**European:** A01G9/02B A01G9/10 A01G9/10D

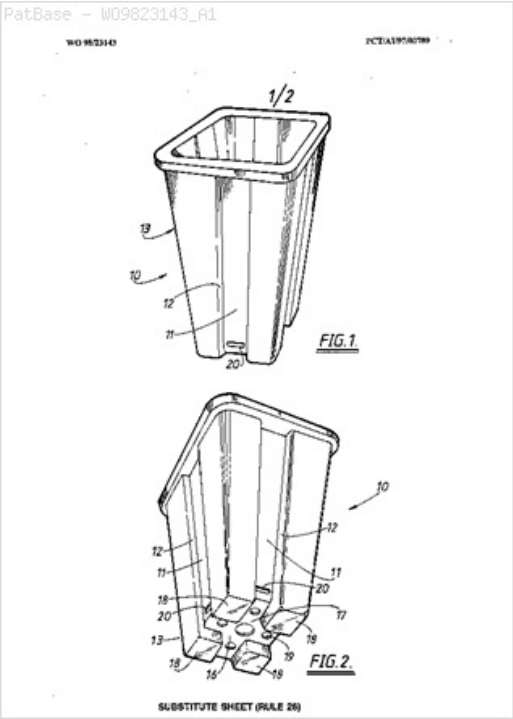


**Family:**

| Publication number | Publication date | Application number | Application date |
|---|---|---|---|
| AU199749360 A1 | 19980622 | AU19970049360 | 19971124 |
| AU380396 A0 | 19961219 | AU1996PO03803 | 19961122 |
| AU750856 B2 | 20020801 | AU19970049360 | 19971124 |
| AU963097 A0 | 19971030 | AU1997PO09630 | 19971003 |
| WO9823143 A1 | 19980604 | WO1997AU00789 | 19971124 |

**Priority:**

AU1996PO03803 19961122 AU1997PO09630 19971003 AU19970049360 19971124 WO1997AU00789 19971124

**Probable Assignee:** FENN C A

**Assignee(s):** (std): CHRISTOPHER ANTHONY FENN ; FENN C A ; FENN CHRISTOPHER ANTHONY

**Inventor(s):** (std): FENN CHRISTOPHER ANTHONY

**Inventor(s):** CHRISTOPHER ANTHONY FENN

**Agent(s):** CHRISTOPHER ANTHONY FENN

**Designated states:** AL AM AT AU AZ BA BB BE BG BR BY CA CH CN CU CZ DE DK EE ES FI FR GB GE GH GR HU ID IE IL IS IT JP KE KG KP KR KZ LC LK LR LS LT LU LV MC MD MG MK MN MW MX NO NZ PL PT RO RU SD SE SG SI SK SL SZ TJ TM TR TT UA UG US UZ VN YU ZW

**7) Family number: 60269480** (US2017064915A)

© PatBase

**Title:** SYSTEMS FOR CULTIVATING PLANTS WITH AERIAL ROOTS

**Abstract:** The application provides methods and systems for cultivating plants, more particularly plants with aerial roots. The methods and systems are provided with one or more features which facilitate the cultivation of such plants. More particularly the application provides a system comprising a cultivation tray and vases fitting therein, whereby each of the vases comprise one or more ridges on the inner wall of said vase.

**Classifications:**
**International** (IPC 8-9): A01G31/02 A01G9/02 A01G9/10 (Advanced/Invention)
**CPC:** Y02P60/216 A01G9/027 A01G31/02 A01G9/0297 A01G9/029 A01G22/63 A01G2009/003
**US:** 47/60

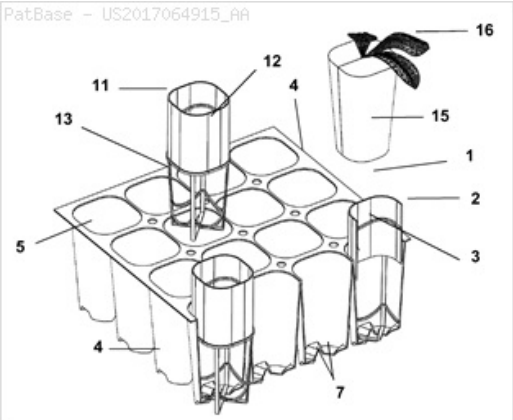


**Family:**

| Publication number | Publication date | Application number | Application date |
|---|---|---|---|
| BR112016027813 A2 | 20170822 | BR20161127813 | 20150528 |
| EP3148320 A1 | 20170405 | EP20150728784 | 20150528 |

| | | | |
|---|---|---|---|
| NL2012907 A1 | 20150720 | NL20142012907 | 20140528 |
| NL2012907 C | 20150810 | NL20142012907 | 20140528 |
| NL2012907 C2 | 20150810 | NL20142012907 | 20140528 |
| US2017064915 AA | 20170309 | US20150307424 | 20150528 |
| WO15181278 A1 | 20151203 | WO2015EP61812 | 20150528 |

**Priority:**

NL20142012907 20140528 BE20140000496 20140627 WO2015EP61812 20150528

**Probable Assignee:** FLOREAC NV

**Assignee(s):** (std): FLOREAC N V

**Assignee(s):** FLOREAC NV

**Inventor(s):** (std): STEELANDT ARNE

**Inventor(s):** ARNE STEELANDT

**Agent(s):** PAEMEN LIESBET RJ; PAEMEN LIESBET RITA JOHANNA ET AL

**Designated states:** AE AG AL AM AO AT AU AZ BA BB BE BF BG BH BJ BN BR BW BY BZ CA CF CG CH CI CL CM CN CO CR CU CY CZ DE DK DM DO DZ EC EE EG ES FI FR GA GB GD GE GH GM GN GQ GR GT GW HN HR HU ID IE IL IN IR IS IT JP KE KG KM KN KP KR KZ LA LC LI LK LR LS LT LU LV LY MA MC MD ME MG MK ML MN MR MT MW MX MY MZ NA NE NG NI NL NO NZ OM PA PE PG PH PL PT QA RO RS RU RW SA SC SD SE SG SI SK SL SM SN ST SV SY SZ TD TG TH TJ TM TN TR TT TZ UA UG US UZ VC VN ZA ZM ZW

**8) Family number: 72485244** (WO18229486A1)

© PatBase

**Title:** CONTAINER AND PLANT TRAY

**Abstract:** A container for propagating or growing plants is configured to receive a substrate for propagating plants and comprises a drain hole, an inclined side wall, and a plurality of ribs positioned on the side wall and extending into the container. At least two ribs are arranged close to and parallel to one another, defining a channel therebetween through which air may flow, in use, when the container contains a substrate. In a plant tray comprising an array of cells, at least one cell comprises a rim, arranged around the drain hole on the underside of the cell, in which a thickness of the rim is greater than a thickness of the side wall. A plant tray comprising an array of cells having octagonal cell openings comprises a plurality of vents arranged between the cells and configured to allow air to flow through the tray top. A plant tray comprising vents in the tray top comprises vent rims arranged around the circumferences of the vents, the vent rims being configured to project downwards from the tray top.

**Classifications:**
**International** (IPC 8-9): A01G9/029 (Advanced/Invention)
**CPC:** A01G9/0295

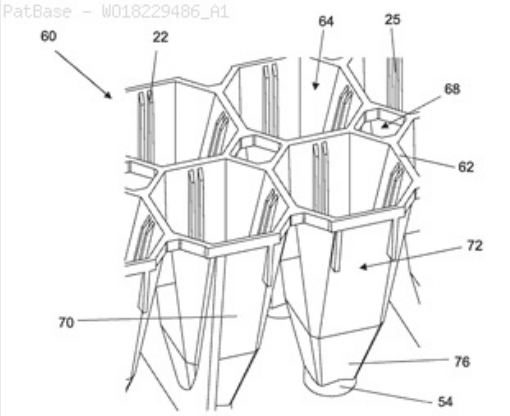

FIGURE 7A

**Family:**

| Publication number | Publication date | Application number | Application date |
|---|---|---|---|
| WO18229486 A1 | 20181220 | WO2018GB51623 | 20180613 |

**Priority:**

US20170519108P 20170613

**Probable Assignee:** INT PLANT PROPAGATION TECH LTD

**Assignee(s):** (std): INT PLANT PROPAGATION TECH LTD

**Assignee(s):** INT PLANT PROPAGATION TECHNOLOGY LTD

**Inventor(s):** (std): COOLEY JOHN

**Agent(s):** REDDIE AND GROSE LLP

**Designated states:** AE AG AL AM AO AT AU AZ BA BB BE BF BG BH BJ BN BR BW BY BZ CA CF CG CH CI CL CM CN CO CR CU CY CZ DE DJ DK DM DO DZ EC EE EG ES FI FR GA GB GD GE GH GM GN GQ GR GT GW HN HR HU ID IE IL IN IR IS IT JO JP KE KG KH KM KN KP KR KW KZ LA LC LK LR LS LT LU LV LY MA MC MD ME MG MK ML MN MR MT MW MX MY MZ NA NE NG NI NL NO NZ OM PA PE PG PH PL PT QA RO RS RU RW SA SC SD SE SG SI SK SL SM SN ST SV SY SZ TD TG TH TJ TM TN TR TT TZ UA UG US UZ VC VN ZA ZM ZW

**9) Family number: 41819568** (US2008115413A)

© PatBase

**Title:** HORTICULTURE TRAY

**Abstract:** A first horticulture tray including cells and posts axially extending in the same direction from an upper surface. The cells are arranged in rows and columns that are aligned approximately perpendicular to the rows. The cells and the posts nest within similar cells and similar posts of a similar horticulture tray in a first orientation. The posts contact a similar upper surface of the similar horticulture tray to space the upper surface from the similar horticulture tray in a second orientation.

**Classifications:**
**International** (IPC 8-9): A01G9/02 B65D21/02 (Advanced/Invention);
A01G9/02 B65D21/02 (Core/Invention)

**CPC:** B65D85/52 A01G9/0295
**European:** A01G9/10G B65D85/52
**US:** 206/507 47/65.5 47/65.7 47/87

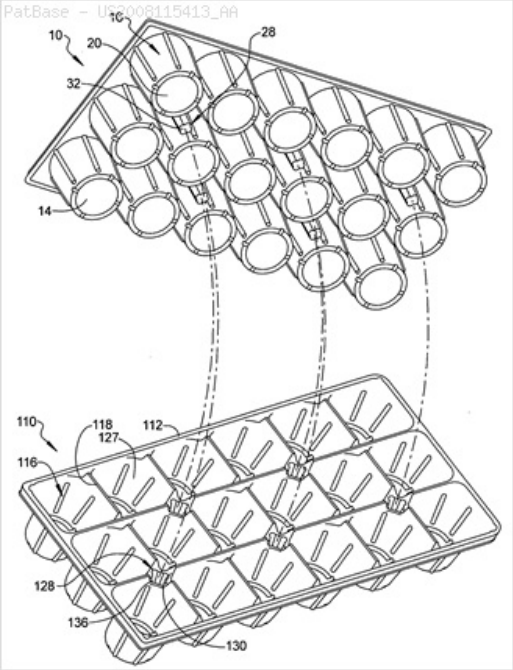


**Family:**

| Publication number | Publication date | Application number | Application date |
|---|---|---|---|
| US2008115413 AA | 20080522 | US20060602385 | 20061120 |

**Priority:**
US20060602385 20061120

**Probable Assignee:** BLACKMORE CO INC
**Assignee(s):** (std): BLACKMORE CO INC ; BLACKMORE COMPANY INC
**Inventor(s):** (std): BLACKMORE FRED N
**Agent(s):** HARNESS DICKEY AND PIERCE PLC

**10) Family number: 30120989** (US2003233787A)

© PatBase

**Title:** Seed-starter cell and tray for starting plants

**Abstract:** a starter cell for starting a plant has a first opening at the topmost portion of the cell for facilitating plant seeding and growth, a second opening at the bottommost portion of the cell for facilitating root passage for air pruning of the root, and a plurality of inward-facing ridges formed vertically along the cell walls and along any cell comers. The cell is characterized in that the ridges are strategically placed to guide developing roots to avoid twisting and balling. In some embodiment the ridges have feet to provided for stacking, for example.

**Classifications:**
**International (IPC 8-9):** A01G9/02 A01G9/10 (Advanced/Invention); A01G9/02 A01G9/10 (Core/Invention)
**International (IPC 1-7):** A01G9/10
**CPC:** A01G9/021
**European:** A01G9/02B A01G9/10
**US:** 47/77 47/770 47/87

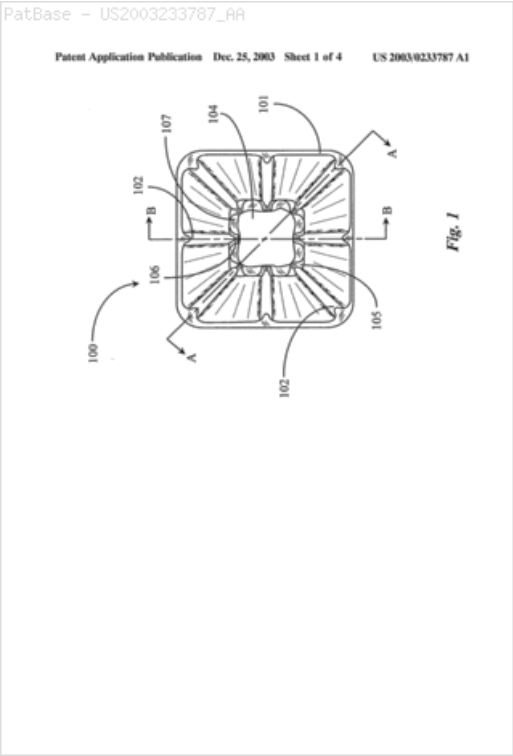


**Family:**

| Publication number | Publication date | Application number | Application date |
|---|---|---|---|
| US2003233787 AA | 20031225 | US20020177813 | 20020620 |
| US6901699 BB | 20050607 | US20020177813 | 20020620 |

**Priority:**

US20020177813 20020620

**Probable Assignee:** HARTMAN GARY RAYMOND

**Assignee(s):** (std): HARTMAN GARY RAYMOND

**Inventor(s):** (std): HARTMAN GARY RAYMOND

**Agent(s):** CENTRAL COAST PATENT AGENCY; BOYS DONALD R; DONALD R

**11) Family number: 54511975** (ZA201402628A)

© PatBase

**Title:** A CELL AND A TRAY FOR PLANT PROPAGATION

**Abstract:** A cell (1) for a seedling tray has a tubular body (2) with cell sides (3-6) forming an open upper end (7) and an at least partly open lower end (8) and cell corner portions (9-12) between each of said cell sides, whereby inwardly facing channels (13-16) extend along said cell sides from the upper end and to the lower end of the cell and are provided at least mainly outside a main plane (P3-P6) of the respective cell side. Trays for such cells are also provided.

**Classifications:**

**International** (IPC 8-9): A01G A01G9/02

A01G9/10 (Advanced/Invention)

**CPC:** A01G9/0295

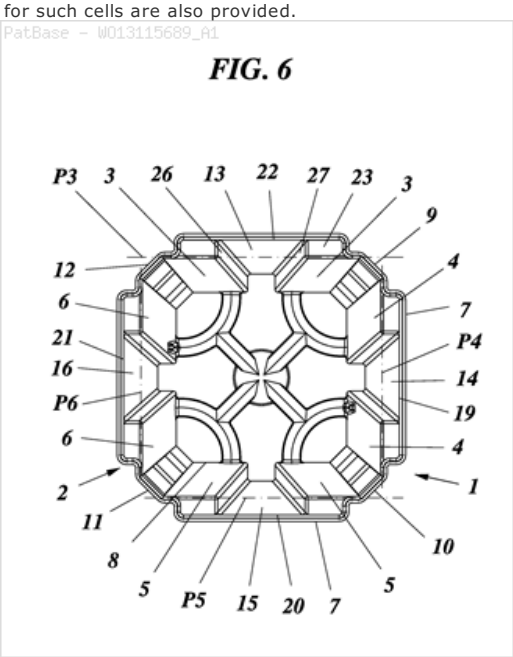


**Family:**

| Publication number | Publication date | Application number | Application date |
|---|---|---|---|
| CN104185418 A | 20141203 | CN201280068648 | 20120202 |
| CN104185418 B | 20161026 | CN201280068648 | 20120202 |
| IN01591KN2014 A | 20151023 | IN2014KN01591 | 20140729 |
| WO13115689 A1 | 20130808 | WO2012SE50103 | 20120202 |
| ZA201402628 A | 20151125 | ZA20140002628 | 20120202 |

**Priority:**

WO2012SE50103 20120202 ZA20140002628 20120202

**Probable Assignee:** BJOERKEMAR CONSTRUCTION AND CONSULTING BCC AB

**Assignee(s):** (std): BJOERKEMAR CONSTRUCTION AND AMP ; BJOERKEMAR CONSTRUCTION AND CONSULTING BCC AB ; BJOERKEMAR HANS ; PERSSON TOBIAS ; BJORKEMAR CONSTRUCTION AND CONSULTING BCC AB

**Assignee(s):** BJOERKEMAR CONSTRUCTION AND ; ELECTROVAYA INC

**Inventor(s):** (std): PERSSON TOBIAS ; BJOERKEMAR HANS ; BJORKEMAR HANS

**Agent(s):** AROS PATENT AB

**Designated states:** AE AG AL AM AO AT AU AZ BA BB BE BF BG BH BJ BR BW BY BZ CA CF CG CH CI CL CM CN CO CR CU CY CZ DE DK DM DO DZ EC EE EG ES FI FR GA GB GD GE GH GM GN GQ GR GT GW HN HR HU ID IE IL IN IS IT JP KE KG KM KN KP KR KZ LA LC LK LR LS LT LU LV LY MA MC MD ME MG MK ML MN MR MT MW MX MY MZ NA NE NG NI NL NO NZ OM PE PG PH PL PT QA RO RS RU RW SC SD SE SG SI SK SL SM SN ST SV SY SZ TD TG TH TJ TM TN TR TT TZ UA UG US UZ VC VN ZA ZM ZW

**12) Family number: 32452757** (WO05112606A1)

© PatBase

**Title:** DEVICE FOR CULTURE OF PLANTS AND PRODUCTION PROCESS THEREOF

**Abstract:** The invention relates to a device intended to the culture of plants and to its production process. It is characterised in that it has tubular shape (1) - cylindrical or prismatic - and in that the internal surface thereof is grooved longitudinally, by means of at least two types of ribs, ones smaller (21) and the others larger (22). In an embodiment that allows the radicular pruning, the inferior part has lateral openings (10) defined by a mesh with sides (11, 12) and rings (15) substantially orthogonal to the axis of the device. The process is by extrusion, followed by cut of the extruded tube. The use of a die that can be regulated, whose exterior part is cyclically obstructed, allows obtaining the openings (10) and the rings (15).

**Classifications:**

**International** (IPC 8-9): A01G9/10 (Advanced/Invention);

A01G9/10 (Core/Invention)
**International (IPC 1-7):** A01G9/10
**CPC:** A01G9/029
**European:** A01G9/10

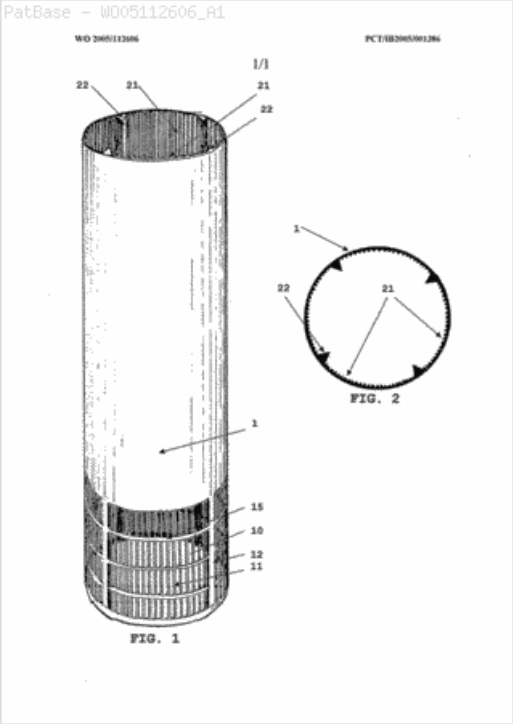


**Family:**

| Publication number | Publication date | Application number | Application date |
|---|---|---|---|
| WO05112606 A1 | 20051201 | WO2005IB01386 | 20050520 |

**Priority:**

PT20040009976 20040520

**Probable Assignee:** CHIRINO MIRANDA ESTEBAN

**Assignee(s):** (std): CHIRINO MIRANDA ESTEBAN ; VENTURA RIBEIRO DE MATOS ANTON ; VILAGROSA CARMONA ALBERTO

**Assignee(s):** VENTURA RIBEIRO DE MATOS ANTONIO

**Inventor(s):** (std): CHIRINO MIRANDA ESTEBAN ; VENTURA RIBEIRO DE MATOS ANTON ; VILAGROSA CARMONA ALBERTO

**Inventor(s):** VENTURA RIBEIRO DE MATOS ANTONIO

**Designated states:** AE AG AL AM AT AU AZ BA BB BE BF BG BJ BR BW BY BZ CA CF CG CH CI CM CN CO CR CU CY CZ DE DK DM DZ EC EE EG ES FI FR GA GB GD GE GH GM GN GQ GR GW HR HU ID IE IL IN IS IT JP KE KG KM KP KR KZ LC LK LR LS LT LU LV MA MC MD MG MK ML MN MR MW MX MZ NA NE NG NI NL NO NZ OM PG PH PL PT RO RU SC SD SE SG SI SK SL SM SN SY SZ TD TG TJ TM TN TR TT TZ UA UG US UZ VC VN YU ZA ZM ZW

**13) Family number: 17241146** (FI920734U)

© PatBase

**Title:** CELLENHET

**Abstract:** 1. A container tray for the growing of plants, said tray, comprising a plurality of interconnected containers, each container having a downwardly tapering tubular shape with an upper edge forming an opening into the container and a bottom comprising a grating having a central opening to the interior of the container, a plurality of vertically oriented ribs formed on the interior of the tubular shape and plurality of vertically oriented slits formed in the tubular shape, each said slit having a lowest end adjacent the bottom; said plurality of containers being interconnected at their upper edges.

**Classifications:**
**International (IPC 8-9):** A01G9/10 (Advanced/Invention);
A01G9/10 (Core/Invention)
**International (IPC 1-7):** A01G9/10

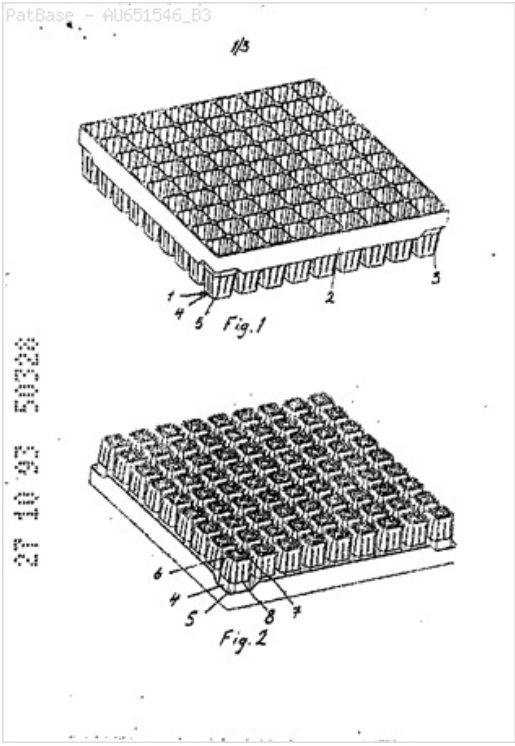


**Family:**

| Publication number | Publication date | Application number | Application date |
|---|---|---|---|
| AU651546 B1 | 19940721 | AU19930050328 | 19931027 |
| AU651546 B3 | 19940721 | AU19930050328 | 19931027 |
| FI607 U1 | 19930318 | FI19920000734U | 19921214 |
| FI920734 U0 | 19921214 | FI19920000734U | 19921214 |

**Priority:**

FI19920000734 19921214 FI19920000734U 19921214

**Probable Assignee:** LAENNEN TEHTAAT OY

**Assignee(s):** (std)**:** LAENNEN TEHTAAT OY

**Assignee(s):** LANNEN TEHTAAT OY

**Inventor(s):** (std)**:** KESKILOHKO ALTTI ; KARHINIEMI ANNELI

**Inventor(s):** ALTTI KESKILOHKO ; ANNELI KARHINIEMI

**Agent(s):** FB RICE; FB RICE PTY LTD

**14) Family number: 24277148** (USD401530S) © PatBase

**Title:** Tray for the growing of seedlings

**Abstract:** (Claims)The ornamental design of a tray for the growing of seedlings, as shown and described.

**Classifications:**

**US:** D11/155

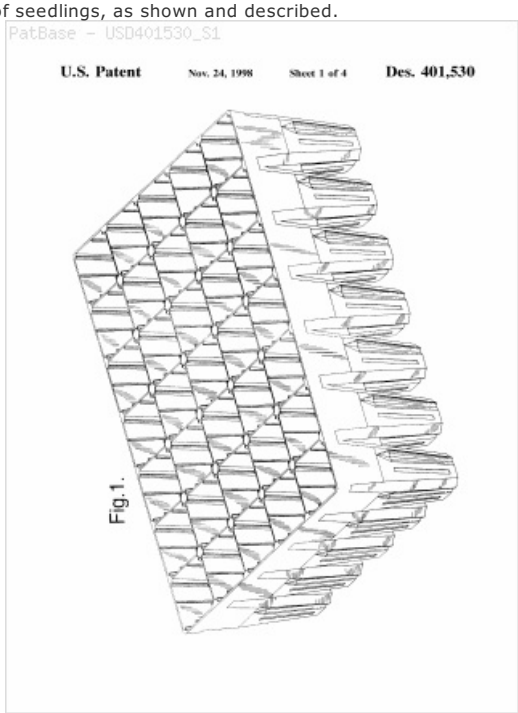

**Family:**

| Publication number | Publication date | Application number | Application date |
|---|---|---|---|
| USD401530 S1 | 19981124 | US19970074954F | 19970814 |

**Priority:**

US19970074954F 19970814

**Probable Assignee:** LANNEN TEHTAAT OY

**Assignee(s):** LANNEN TEHTAAT OY ; LANNEN TEHTAAT OY PL

**Inventor(s):** ALTTI KESKILOHKO

**15) Family number: 32385902** (EP1593302A1)

© PatBase

**Title:** ASSEMBLY COMPRISING A CARRIER FOR BALL PLANTS AS WELL AS SUCH A CARRIER

**Abstract:** An assembly provided with a carrier for ball plants, comprising a substantially flat body accommodating a number of wall-bounded holders, which are open at least at an upper side thereof. The assembly is furthermore provided with pots made of a biodegradable material that can be detachably positioned within said holders, which pots contain the ball plants.

**Classifications:**
**International (IPC 8-9):** A01G9/10 (Advanced/Invention); A01G9/10 (Core/Invention)
**International (IPC 1-7):** A01G9/10
**CPC:** A01G9/0295 A01G9/0291
**European:** A01G9/10F A01G9/10G

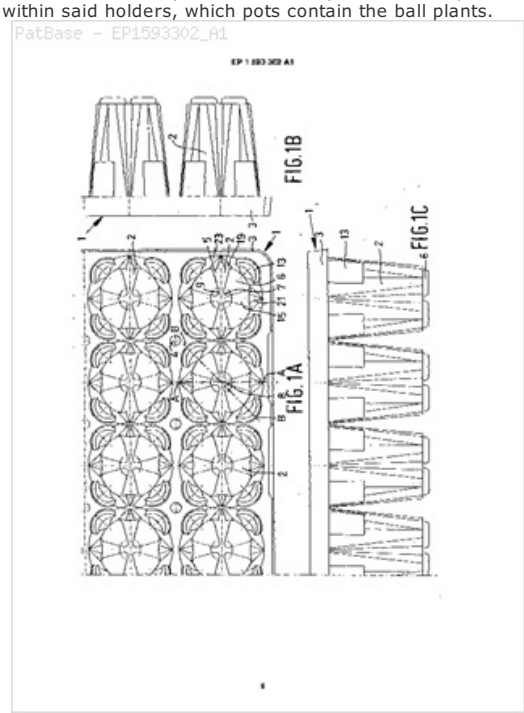


**Family:**

| Publication number | Publication date | Application number | Application date |
|---|---|---|---|
| EP1593302 A1 | 20051109 | EP20050076008 | 20050429 |
| NL1026120 C2 | 20051108 | NL20041026120 | 20040506 |

**Priority:**

NL20041026120 20040506

**Probable Assignee:** DESCH PLANTPAK BV

**Assignee(s):** (std): DESCH PLANTPAK B V ; DESCH PLANTPAK BV

**Inventor(s):** (std): MORTKO STANISLAW ADAM JULIAN ; VAN DE VOORDE GEERT KAMIEL HEL ; VOORDE GEERT KAMIEL HELENE VAN ; VOORDE GEERT

**Inventor(s):** STANISLAW ADAM JULIAN MORTKO ; GEERT KAMIEL HELENE VAN DE VOORDE ; VAN DE VOORDE GEERT KAMIEL HELENE

**Designated states:** AT BE BG CH CY CZ DE DK EE ES FI FR GB GR HU IE IS IT LI LT LU MC NL PL PT RO SE SI SK TR