7646564

THE UNITED STATES OF AMERICA

TO ALL TO WHOM THESE PRESENTS SHALL COME:

UNITED STATES DEPARTMENT OF COMMERCE

United States Patent and Trademark Office

August 16, 2017

THIS IS TO CERTIFY THAT ANNEXED HERETO IS A TRUE COPY FROM THE RECORDS OF THE UNITED STATES PATENT AND TRADEMARK OFFICE OF THOSE PAPERS OF THE BELOW IDENTIFIED PATENT APPLICATION THAT MET THE REQUIREMENTS TO BE GRANTED A FILING DATE UNDER 35 USC 111.

APPLICATION NUMBER: ***62/440,448***
FILING DATE: ***December 30, 2016***

THE COUNTRY CODE AND NUMBER OF YOUR PRIORITY APPLICATION, TO BE USED FOR FILING ABROAD UNDER THE PARIS CONVENTION, IS ***US62/440,448***

UNITED STATES PATENT AND TRADEMARK OFFICE
DEPARTMENT OF COMMERCE

Certified by

Michelle K. Lee

Under Secretary of Commerce
for Intellectual Property
and Director of the United States
Patent and Trademark Office

AUTOMOTIVE LAMINATED GLAZING WITH ENHANCED SPECTRAL PROPERTIES USING BAND ABSORPTION DYES

Field of Invention

The present invention relates generally to the field of laminated glazing using optical narrow band absorption dyes.

Abstract

The present invention provides for a laminate that utilizes the ability of a narrow band absorbing dyes to absorb selective wavelengths of light by identifying a color target and tuning to that target. Working with just glass compositions, coatings, interlayers and films, all of which act as broad band filers, it is difficult to fine tune the spectral response of a laminate. Narrow band absorbing dyes are used to selectively tune the spectral response to achieve targeted performance in the UV, visible and IR ranges of the spectrum.

Background of the invention

The various glass compositions, interlayers, films and coatings, used to improve solar control, reduce weight and add other features in laminated glass, may shift visible color, the white point, towards a less desirable aesthetic. This is because these materials act as optical broad band filters. As such, they typically are active over a broad range with a low slope leading to less than desired response especially in the transition areas.

Limited options exist for controlling and adjusting the spectral response. Working with just the glass compositions, coatings, interlayers and films it is difficult to fine tune the spectral response of a laminate within a narrow band of the spectrum. The final result is often a compromise between performance, aesthetics and regulatory compliance. As can be appreciated, means for fine tuning of the spectral response would enhance both performance and aesthetics.

Description of drawings

Figure 1 is a cross section of a typical laminate;
Figure 2 is a cross section of the laminate of the present invention with film.

Guide to the numbers

1	#1 Surface
2	#2 Surface
3	#3 Surface
4	#4 Surface
5	Glass
6	Interlayer
7	Film

Detailed description of the invention

The present invention refers to a laminate which uses narrow band absorbers to fine tune and adjust the spectral response of the laminate.

Narrow band absorbers, with absorption bands as narrow as 10 nm, filter out light with low visible color even at high optical densities. Some examples of the spectral response are shown in Charts 1 - 4. These narrow band absorption dyes are used to create selective wavelength filters. These filters are used in LASERs, camera lenses, eye glasses and in security applications. The present invention may combine multiple absorbers to customize the shape of the absorption. Narrow band absorbers can also be used in conjunction with board band absorbing dyes to create sharp cut-off, long pass filters.

Referring to FIG. 1, it is shown a laminated glass comprised of an assembly of at least two glass layers **5** which are bonded together using plastic layers **6**.

In one embodiment of the present invention, as shown in FIG. 2, the plastic layer **6** can also include a film layer **7**. A film **7** is defined to include but is not limited to: polyester (PET), polymer dispersed liquid crystal (PDLC), suspended particle device (SPD), coated solar control film, electro-chromic film (EC) or a tinted film.

Narrow band absorbers are available in forms that can be mixed with solvents or water and that can be dispersed within plastics. Multiple means for application of this type of bands can be applied by spray or any other suitable means known in the art, of a water or solvent based carrier to the glass **5** or plastic layers **6**.

Alternately, the dye can be mixed in with the plastic **6** prior to forming of the plastic layer. In this manner, the narrow band absorbers can be applied, in any combination, as a coating to any of the glass or plastic surfaces (**1, 2, 3,** or **4**) or dispersed in the plastic layers. The dyes can be incorporated such as to cover the entire area of the laminate or a selective portion.

Multiple applications cross section can be applied for the present invention, such as for automotive glazings is a windshield. In such applications, a combination of narrow band and broad band absorbing dyes can be configured to filter or more accurately *attenuate visible light* in multiple or single combinations of spectral bands.

This alone or in combination with technologies such as glass coatings, films, interlayers and glass compositions constitutes a novel optical filter. The filter is comprised of any number of dyes applied to any combination of surfaces of the glass and plastic surface and/or dispersed in any combination of the plastic layers.

Highly thermally stable, narrow band, *visible light absorbing* dyes can be used to selectively tune color in automotive glazing. Narrow band absorbers have been of interest for some time due the high exciton diffusion coefficient properties and the very specific tunable wavelength absorption, some with characteristics as low as 10 nm at half-mast and some with characteristics as wide as 100 nm at half-mast. In this particular instance, the present invention may use the narrow wavelength absorptions as a method of selectively tuning color without compromising total visible light (Tvis) into the vehicle.

The laminate of the present invention utilizes the ability of the narrow band absorber to absorb selective wavelengths of light by identifying a color target and tuning to that target. At the same time this allows more total visible light to enter thought the total glazing that with a broad band filter. This provides more flexibility to use more absorbers at different wave lengths and/or to mix these absorbers with broad band absorbers to attain our final desired effect and create an optical filter. For instance,

In applications where tuning color is particularly difficult, as when the selected components of the laminate have a function driven "lock" on a certain range of bandwidths, tuning can become very difficult if not impossible with broad band absorbers. Variable light transmission products like SPD, PDLC, or EC often exhibit these properties. Using a lot of the available visible spectrum and coming close to the total allowable Tvis color correction or tuning colors to specific client requests can become impossible.

In example, a variable transmission film has a functional "Lock' on 450 nm to 525 nm causing the final product to be a very bold blue. With a narrow band absorber placed at 475 nm with a very narrow peak in the range of 30 nm at half-mast, that peak could absorb blue light and shift the apparent or observed color to the orange side of the spectrum, all the while still fitting within the tight specifications of total Tvis.

The secondary effect of this is an apparent white point shift in the vision of the observer, giving rise to natural color and hue enchantments that can also be targeted or selectivity tuned if so desired. For instance, the front glazing windshield of fleet vehicles could be enhanced to more readily detect orange and red safety signs or systems in certain lighting conditions such as dusk or dawn.

Another application for this type of absorber is solar performance, or additional solar performance. The volume of energy in the visible spectrum peaks near 500 nm. Using a narrow band absorption with a 500 nm peak will significantly reduce the total solar load (Tsol) and allow the secondary use of other technologies such as silver coatings or films without sacrificing total TVIS. Using a narrow band absorber that showed both a main peak at 600 nm

and a secondary peak at 350 nm would help create a virtual notch filter that could be filled in by a broad band absorber or by additional technologies that could be reflective or absorbing in nature.

Advantages

Improved aesthetics (color);
Ability to enhance colors;
Improved solar performance;
Increase visible light without increasing solar load;
Reduce glare.

Examples

A windshield including a narrow band absorbing dye, having a bandwidth in the 550 nm range, spray coated on surface **2** of the interlayer to improve solar performance and shift the color.

A windshield including a narrow band absorbing dye, having a bandwidth in the 380 - 420 nm range is dispersed in the interlayer as the interlayer is extruded to protect SPD/PDLC films from UV and near UV.

A windshield including a narrow band absorbing dye, having a bandwidth in the 780 - 820 nm range, spray coated onto surface **2** of the glass to improve solar performance.

A windshield including a narrow band absorbing dye having peaks at both 450 and 600 nm is spray coated onto surface **2** of the glass to shift the white point.

The forms of the invention shown and described in this specification represent illustrative preferred embodiments and it is understood that various changes may be made without departing from the spirit of the invention as defined in the following claimed subject matter.

References

U.S. application Ser. No. 13/029,997, filed Feb. 17, 2011, titled EYEWEAR WITH CHROMA ENHANCEMENT which claims the benefit under 35 U.S.C. §119(e) of U.S. Provisional Patent Application No. 61/425,707, filed Dec. 21, 2010, titled EYEWEAR AND LENSES WITH CHROMA ENHANCING FILTER, and U.S. Provisional Patent Application No. 61/324,706, filed Apr. 15, 2010, titled EYEWEAR AND LENSES WITH CHROMA ENHANCING FILTER.

Claims:

1. A laminate comprising:
   - at least two glass layers,
   - at least one plastic layer,
   - at least one narrow band absorbing dye,

   said plastic layer positioned between major surfaces of said glass layers and serving to bond said glass layers to each other,

   said narrow band absorbing dye applied to at least a portion of the vision area of the laminate.

2. The laminate of claim 1 further comprising said narrow band absorbing dye applied to at least one of the glass layer surfaces.

3. The laminate of claim 1 further comprising said narrow band absorbing dye applied to at least one of the glass layer surfaces adjacent to a said plastic layer surface.

4. The laminate of claim 1 further comprising said narrow band absorbing dye applied to at least one of the plastic layer surfaces.

5. The laminate of claim 1 further comprising said narrow band absorbing dye dispersed through at least a portion of at least one plastic layer.

6. The laminate of claim 1 further comprising at least one plastic layer comprising a film layer positioned between the major surfaces of two thermo-plastic layers.

7. The laminate of claim 6 further comprising a film layer which is a PET plastic.

8. The laminate of claim 6 further comprising a film layer which is a substantially plastic performance film.

9. The laminate of claim 1 further comprising a narrow band absorbing dye having a chemical composition of

10. The laminate of claim 1 further comprising a narrow band absorbing dye having a band width of 150 nm.

11. The laminate of claim 1 further comprising a narrow band absorbing dye having a band width of 100 nm.

12. The laminate of claim 1 further comprising a narrow band dye absorbing having a band width of 50 nm.

13. The laminate of claim 1 further comprising at least one narrow band absorbing dye a bandwidth substantially in the IR range.

14. The laminate of claim 1 further comprising at least one narrow band absorbing dye having a bandwidth substantially in the visible range.

15. The laminate of claim 1 further comprising at least one narrow band absorbing dye having a bandwidth substantially in the UV range.

16. The laminate of claim 1 further comprising a narrow band absorbing dye positioned in the camera field of view.

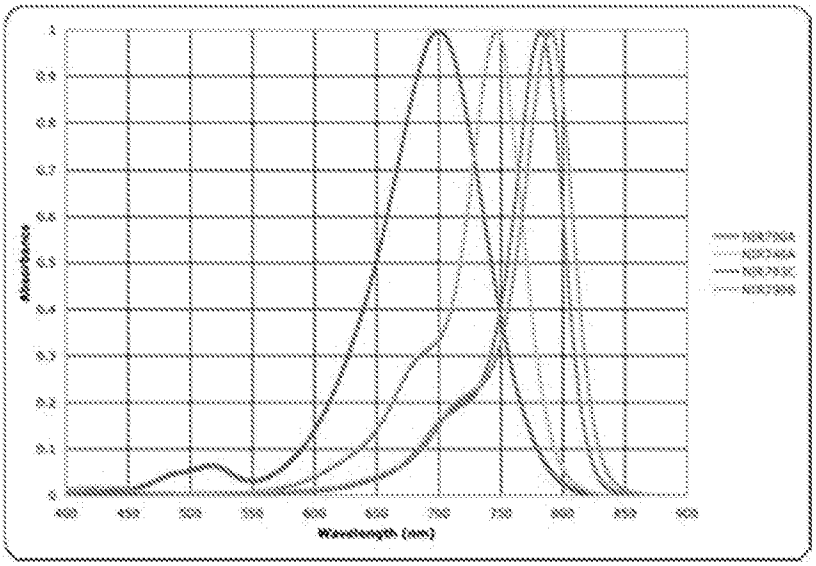

Graph 1

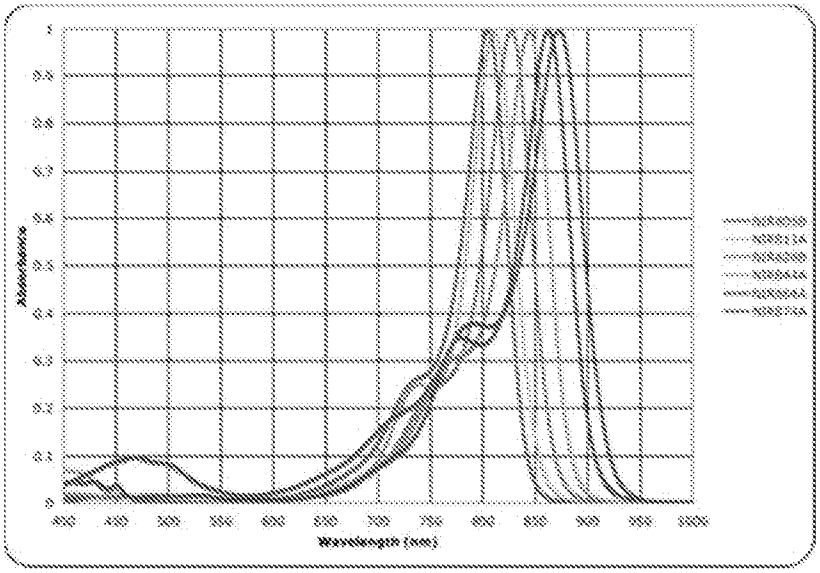

Graph 2

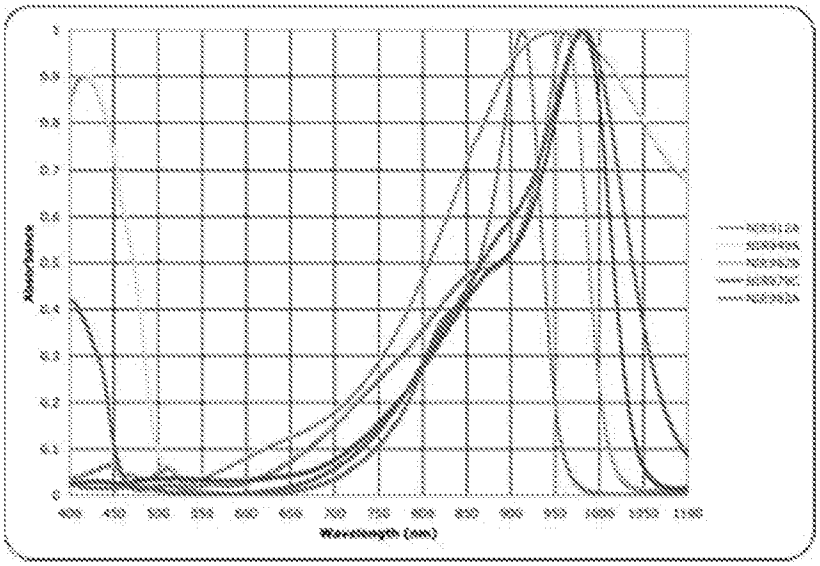

Graph 3

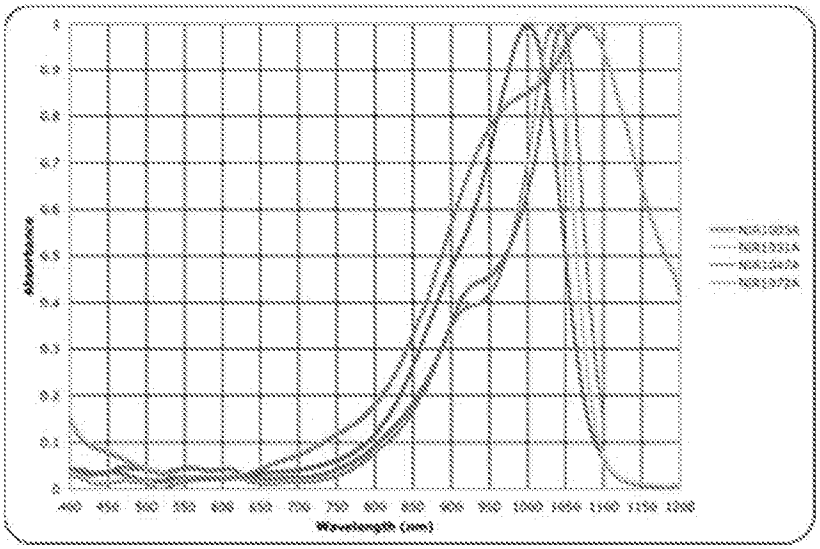

Graph 4

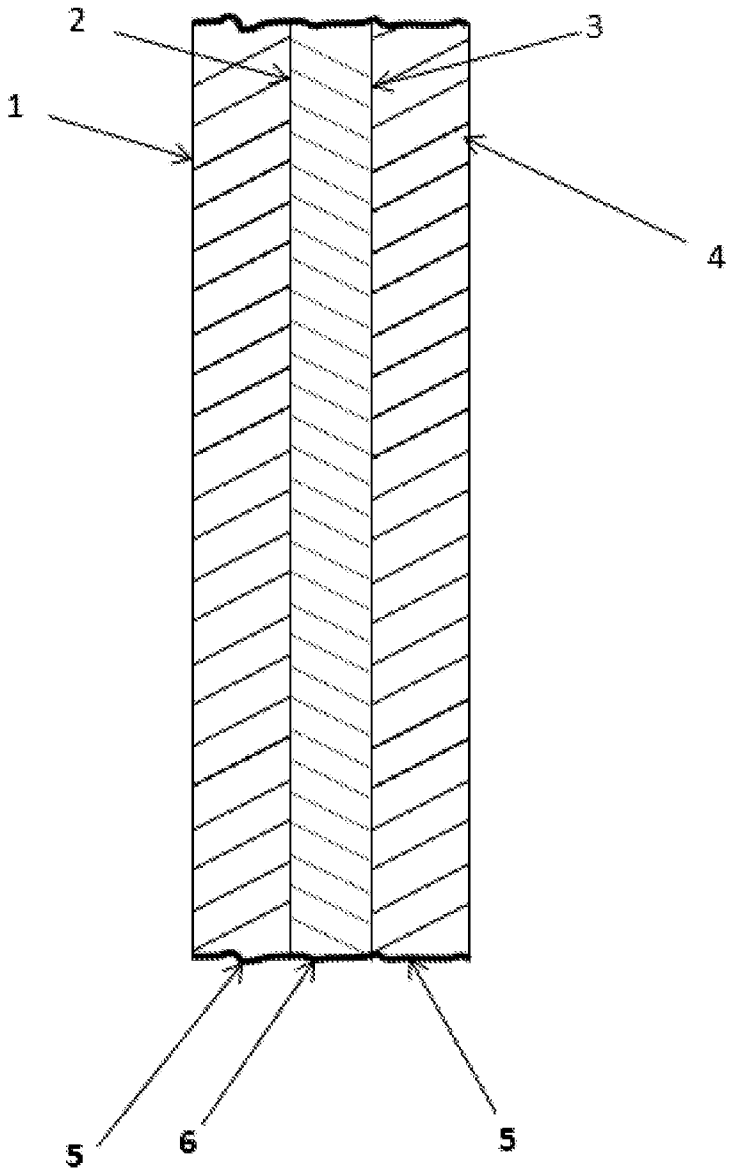

Fig. 1

2/2

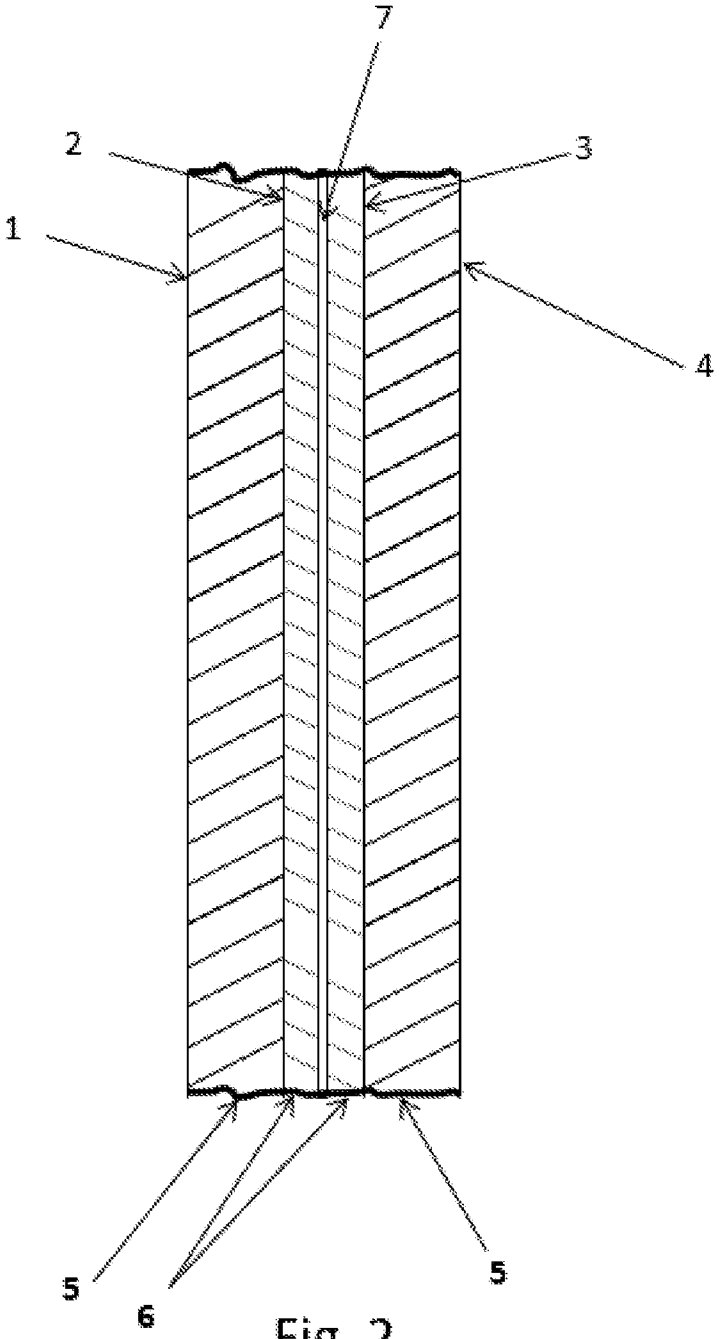

Fig. 2

11601v1

Inventors

- **Mario Arturo Mannheim Astete**, Peruvian, Av. Guillermo Dansey 1846, Cercado de Lima, Peru.
- **Philip Denton Gordon**, United States, Guillermo Dansey 1846, Cercado de Lima, Lima, Perú.

11601v1

Doc Code: **TR.PROV**
Document Description: Provisional Cover Sheet (SB16)

PTO/SB/16 (11-08)
Approved for use through 05/31/2015. OMB 0651-0032
U.S. Patent and Trademark Office: U.S. DEPARTMENT OF COMMERCE
Under the Paperwork Reduction Act of 1995, no persons are required to respond to a collection of information unless it displays a valid OMB control number

Provisional Application for Patent Cover Sheet

This is a request for filing a PROVISIONAL APPLICATION FOR PATENT under 37 CFR 1.53(c)

Inventor(s)

Inventor 1 — Remove

Given Name	Middle Name	Family Name	City	State	Country ¡
Mario	Arturo	Mannheim Astete	Lima		PE

Inventor 2 — Remove

Given Name	Middle Name	Family Name	City	State	Country ¡
Philip	Denton	Gordon	Lima		PE

All Inventors Must Be Listed – Additional Inventor Information blocks may be generated within this form by selecting the **Add** button. Add

Title of Invention	AUTOMOTIVE LAMINATED GLAZING WITH ENHANCED SPECTRAL PROPERTIES USING BAND ABSORPTION DYES
Attorney Docket Number (if applicable)	1511.20300

Correspondence Address

Direct all correspondence to (select one):

◉ The address corresponding to Customer Number	◯ Firm or Individual Name
Customer Number	130961

The invention was made by an agency of the United States Government or under a contract with an agency of the United States Government.

- ● No.
- Yes, the invention was made by an agency of the United States Government. The U.S. Government agency name is:
- Yes, the invention was under a contract with an agency of the United States Government. The name of the U.S. Government agency and Government contract number are:

Doc Code: **TR.PROV**
Document Description: Provisional Cover Sheet (SB16)

PTO/SB/16 (11-08)
Approved for use through 05/31/2015. OMB 0651-0032
U.S. Patent and Trademark Office: U.S. DEPARTMENT OF COMMERCE
Under the Paperwork Reduction Act of 1995, no persons are required to respond to a collection of information unless it displays a valid OMB control number

Entity Status
Applicant asserts small entity status under 37 CFR 1.27 or applicant certifies micro entity status under 37 CFR 1.29

- ○ Applicant asserts small entity status under 37 CFR 1.27
- ○ Applicant certifies micro entity status under 37 CFR 1.29. Applicant must attach form PTO/SB/15A or B or equivalent.
- ◉ No

Warning

Petitioner/applicant is cautioned to avoid submitting personal information in documents filed in a patent application that may contribute to identity theft. Personal information such as social security numbers, bank account numbers, or credit card numbers (other than a check or credit card authorization form PTO-2038 submitted for payment purposes) is never required by the USPTO to support a petition or an application. If this type of personal information is included in documents submitted to the USPTO, petitioners/applicants should consider redacting such personal information from the documents before submitting them to USPTO. Petitioner/applicant is advised that the record of a patent application is available to the public after publication of the application (unless a non-publication request in compliance with 37 CFR 1.213(a) is made in the application) or issuance of a patent. Furthermore, the record from an abandoned application may also be available to the public if the application is referenced in a published application or an issued patent (see 37 CFR1.14). Checks and credit card authorization forms PTO-2038 submitted for payment purposes are not retained in the application file and therefore are not publicly available.

Signature

Please see 37 CFR 1.4(d) for the form of the signature.

Signature	/Joseph L. Morales/			Date (YYYY-MM-DD)	2016-12-30
First Name	Joseph	Last Name	Morales	Registration Number (If appropriate)	58835

This collection of information is required by 37 CFR 1.51. The information is required to obtain or retain a benefit by the public which is to file (and by the USPTO to process) an application. Confidentiality is governed by 35 U.S.C. 122 and 37 CFR 1.11 and 1.14. This collection is estimated to take 8 hours to complete, including gathering, preparing, and submitting the completed application form to the USPTO. Time will vary depending upon the individual case. Any comments on the amount of time you require to complete this form and/or suggestions for reducing this burden, should be sent to the Chief Information Officer, U.S. Patent and Trademark Office, U.S. Department of Commerce, P.O. Box 1450, Alexandria, VA 22313-1450. DO NOT SEND FEES OR COMPLETED FORMS TO THIS ADDRESS. **This form can only be used when in conjunction with EFS-Web. If this form is mailed to the USPTO, it may cause delays in handling the provisional application.**

Privacy Act Statement

The Privacy Act of 1974 (P.L. 93-579) requires that you be given certain information in connection with your submission of the attached form related to a patent application or paten. Accordingly, pursuant to the requirements of the Act, please be advised that : (1) the general authority for the collection of this information is 35 U.S.C. 2(b)(2); (2) furnishing of the information solicited is voluntary; and (3) the principal purpose for which the information is used by the U.S. Patent and Trademark Office is to process and/or examine your submission related to a patent application or patent. If you do not furnish the requested information, the U.S. Patent and Trademark Office may not be able to process and/or examine your submission, which may result in termination of proceedings or abandonment of the application or expiration of the patent.

The information provided by you in this form will be subject to the following routine uses:

1. The information on this form will be treated confidentially to the extent allowed under the Freedom of Information Act (5 U.S.C. 552) and the Privacy Act (5 U.S.C 552a). Records from this system of records may be disclosed to the Department of Justice to determine whether disclosure of these records is required by the Freedom of Information Act.
2. A record from this system of records may be disclosed, as a routine use, in the course of presenting evidence to a court, magistrate, or administrative tribunal, including disclosures to opposing counsel in the course of settlement negotiations.
3. A record in this system of records may be disclosed, as a routine use, to a Member of Congress submitting a request involving an individual, to whom the record pertains, when the individual has requested assistance from the Member with respect to the subject matter of the record.
4. A record in this system of records may be disclosed, as a routine use, to a contractor of the Agency having need for the information in order to perform a contract. Recipients of information shall be required to comply with the requirements of the Privacy Act of 1974, as amended, pursuant to 5 U.S.C. 552a(m).
5. A record related to an International Application filed under the Patent Cooperation Treaty in this system of records may be disclosed, as a routine use, to the International Bureau of the World Intellectual Property Organization, pursuant to the Patent Cooperation Treaty.
6. A record in this system of records may be disclosed, as a routine use, t o a n other federal agency for purposes of National Security review (35 U.S.C. 181) and for review pursuant to the Atomic Energy Act (42 U.S.C. 218(c)).
7. A record from this system of records may be disclosed, as a routine use, to the Administrator, General Services, or his/her designee, during an inspection of records conducted by GSA as part of that agency's responsibility to recommend improvements in records management practices and programs, under authority of 44 U.S.C. 2904 and 2906. Such disclosure shall be made in accordance with the GSA regulations governing inspection of records for this purpose, and any other relevant (i.e., GSA or Commerce) directive. Such disclosure shall not be used to make determinations about individuals.
8. A record from this system of records may be disclosed, as a routine use, to the public after either publication of the application pursuant to 35 U.S.C. 122(b) or issuance of a patent pursuant to 35 U.S.C. 151. Further, a record may be disclosed, subject to the limitations of 37 CFR 1.14, as a routine use, to the public if the record was filed in an application which became abandoned or in which the proceedings were terminated and which application is referenced by either a published application, an application open to public inspection or an issued patent.
9. A record from this system of records may be disclosed, as a routine use, to a Federal, State, or local law enforcement agency, if the USPTO becomes aware of a violation or potential violation of law or regulation.

PTO/AIA/14 (07-14)
Approved for use through 04/30/2017. OMB 0651-0032
U.S. Patent and Trademark Office; U.S. DEPARTMENT OF COMMERCE
Under the Paperwork Reduction Act of 1995, no persons are required to respond to a collection of information unless it contains a valid OMB control number.

Application Data Sheet 37 CFR 1.76	Attorney Docket Number	1511.20300
	Application Number	
Title of Invention	AUTOMOTIVE LAMINATED GLAZING WITH ENHANCED SPECTRAL PROPERTIES USING BAND ABSORPTION DYES	

The application data sheet is part of the provisional or nonprovisional application for which it is being submitted. The following form contains the bibliographic data arranged in a format specified by the United States Patent and Trademark Office as outlined in 37 CFR 1.76.
This document may be completed electronically and submitted to the Office in electronic format using the Electronic Filing System (EFS) or the document may be printed and included in a paper filed application.

Secrecy Order 37 CFR 5.2

☐ Portions or all of the application associated with this Application Data Sheet may fall under a Secrecy Order pursuant to 37 CFR 5.2 (Paper filers only. Applications that fall under Secrecy Order may not be filed electronically.)

Inventor Information:

Inventor 1 Remove

Legal Name

Prefix	Given Name	Middle Name	Family Name	Suffix
	Mario	Arturo	Mannheim Astete	

Residence Information (Select One) US Residency ● Non US Residency Active US Military Service

City	Lima	Country of Residence i	PE

Mailing Address of Inventor:

Address 1	Av. Guillermo Dansey 1846		
Address 2	Cercado de Lima		
City	Lima	State/Province	
Postal Code		Country i	PE

Inventor 2 Remove

Legal Name

Prefix	Given Name	Middle Name	Family Name	Suffix
	Philip	Denton	Gordon	

Residence Information (Select One) US Residency ◉ Non US Residency Active US Military Service

City	Lima	Country of Residence i	PE

Mailing Address of Inventor:

Address 1	Guillermo Dansey 1846		
Address 2	Cercado de Lima		
City	Lima	State/Province	
Postal Code		Country i	PE

All Inventors Must Be Listed - Additional Inventor Information blocks may be generated within this form by selecting the **Add** button. Add

Correspondence Information:

PTO/AIA/14 (07-14)
Approved for use through 04/30/2017. OMB 0651-0032
U.S. Patent and Trademark Office; U.S. DEPARTMENT OF COMMERCE
Under the Paperwork Reduction Act of 1995, no persons are required to respond to a collection of information unless it contains a valid OMB control number.

Application Data Sheet 37 CFR 1.76	Attorney Docket Number	1511.20300
	Application Number	
Title of Invention	AUTOMOTIVE LAMINATED GLAZING WITH ENHANCED SPECTRAL PROPERTIES USING BAND ABSORPTION DYES	

Enter either Customer Number or complete the Correspondence Information section below.
For further information see 37 CFR 1.33(a).

☐ **An Address is being provided for the correspondence Information of this application.**

Customer Number	130961		
Email Address	jmorales@moralesq.com	Add Email	Remove Email

Application Information:

Title of the Invention	AUTOMOTIVE LAMINATED GLAZING WITH ENHANCED SPECTRAL PROPERTIES USING BAND ABSORPTION DYES		
Attorney Docket Number	1511.20300	**Small Entity Status Claimed**	☐
Application Type	Provisional		
Subject Matter	Utility		
Total Number of Drawing Sheets (if any)		**Suggested Figure for Publication (if any)**	

Filing By Reference :

Only complete this section when filing an application by reference under 35 U.S.C. 111(c) and 37 CFR 1.57(a). Do not complete this section if application papers including a specification and any drawings are being filed. Any domestic benefit or foreign priority information must be provided in the appropriate section(s) below (i.e., "Domestic Benefit/National Stage Information" and "Foreign Priority Information").

For the purposes of a filing date under 37 CFR 1.53(b), the description and any drawings of the present application are replaced by this reference to the previously filed application, subject to conditions and requirements of 37 CFR 1.57(a).

Application number of the previously filed application	Filing date (YYYY-MM-DD)	Intellectual Property Authority or Country

Publication Information:

☐ Request Early Publication (Fee required at time of Request 37 CFR 1.219)

☐ **Request Not to Publish.** I hereby request that the attached application not be published under 35 U.S.C. 122(b) and certify that the invention disclosed in the attached application **has not and will not** be the subject of an application filed in another country, or under a multilateral international agreement, that requires publication at eighteen months after filing.

Representative Information:

Representative information should be provided for all practitioners having a power of attorney in the application. Providing this information in the Application Data Sheet does not constitute a power of attorney in the application (see 37 CFR 1.32).
Either enter Customer Number or complete the Representative Name section below. If both sections are completed the customer Number will be used for the Representative Information during processing.

Please Select One:	● Customer Number	US Patent Practitioner	◯ Limited Recognition (37 CFR 11.9)
Customer Number	130961		

Under the Paperwork Reduction Act of 1995, no persons are required to respond to a collection of information unless it contains a valid OMB control number.

Application Data Sheet 37 CFR 1.76	Attorney Docket Number	1511.20300
	Application Number	
Title of Invention	AUTOMOTIVE LAMINATED GLAZING WITH ENHANCED SPECTRAL PROPERTIES USING BAND ABSORPTION DYES	

Domestic Benefit/National Stage Information:

This section allows for the applicant to either claim benefit under 35 U.S.C. 119(e), 120, 121, 365(c), or 386(c) or indicate National Stage entry from a PCT application. Providing this information in the application data sheet constitutes the specific reference required by 35 U.S.C. 119(e) or 120, and 37 CFR 1.78.
When referring to the current application, please leave the application number blank.

Prior Application Status			Remove
Application Number	Continuity Type	Prior Application Number	Filing Date (YYYY-MM-DD)

Additional Domestic Benefit/National Stage Data may be generated within this form by selecting the **Add** button. Add

Foreign Priority Information:

This section allows for the applicant to claim priority to a foreign application. Providing this information in the application data sheet constitutes the claim for priority as required by 35 U.S.C. 119(b) and 37 CFR 1.55. When priority is claimed to a foreign application that is eligible for retrieval under the priority document exchange program (PDX)[i] the information will be used by the Office to automatically attempt retrieval pursuant to 37 CFR 1.55(i)(1) and (2). Under the PDX program, applicant bears the ultimate responsibility for ensuring that a copy of the foreign application is received by the Office from the participating foreign intellectual property office, or a certified copy of the foreign priority application is filed, within the time period specified in 37 CFR 1.55(g)(1).

Remove

Application Number	Country[i]	Filing Date (YYYY-MM-DD)	Access Code[i] (if applicable)

Additional Foreign Priority Data may be generated within this form by selecting the **Add** button. Add

Statement under 37 CFR 1.55 or 1.78 for AIA (First Inventor to File) Transition Applications

☐ This application (1) claims priority to or the benefit of an application filed before March 16, 2013 and (2) also contains, or contained at any time, a claim to a claimed invention that has an effective filing date on or after March 16, 2013.
NOTE: By providing this statement under 37 CFR 1.55 or 1.78, this application, with a filing date on or after March 16, 2013, will be examined under the first inventor to file provisions of the AIA.

Under the Paperwork Reduction Act of 1995, no persons are required to respond to a collection of information unless it contains a valid OMB control number.

Application Data Sheet 37 CFR 1.76	Attorney Docket Number	1511.20300
	Application Number	
Title of Invention	AUTOMOTIVE LAMINATED GLAZING WITH ENHANCED SPECTRAL PROPERTIES USING BAND ABSORPTION DYES	

Authorization to Permit Access:

☒ Authorization to Permit Access to the Instant Application by the Participating Offices

If checked, the undersigned hereby grants the USPTO authority to provide the European Patent Office (EPO), the Japan Patent Office (JPO), the Korean Intellectual Property Office (KIPO), the World Intellectual Property Office (WIPO), and any other intellectual property offices in which a foreign application claiming priority to the instant patent application is filed access to the instant patent application. See 37 CFR 1.14(c) and (h). This box should not be checked if the applicant does not wish the EPO, JPO, KIPO, WIPO, or other intellectual property office in which a foreign application claiming priority to the instant patent application is filed to have access to the instant patent application.

In accordance with 37 CFR 1.14(h)(3), access will be provided to a copy of the instant patent application with respect to: 1) the instant patent application-as-filed; 2) any foreign application to which the instant patent application claims priority under 35 U.S.C. 119(a)-(d) if a copy of the foreign application that satisfies the certified copy requirement of 37 CFR 1.55 has been filed in the instant patent application; and 3) any U.S. application-as-filed from which benefit is sought in the instant patent application.

In accordance with 37 CFR 1.14(c), access may be provided to information concerning the date o f filing this Authorization.

Applicant Information:

Providing assignment information in this section does not substitute for compliance with any requirement of part 3 of Title 37 of CFR to have an assignment recorded by the Office.

Applicant 1 Remove

If the applicant is the inventor (or the remaining joint inventor or inventors under 37 CFR 1.45), this section should not be completed. The information to be provided in this section is the name and address of the legal representative who is the applicant under 37 CFR 1.43; or the name and address of the assignee, person to whom the inventor is under an obligation to assign the invention, or person who otherwise shows sufficient proprietary interest in the matter who is the applicant under 37 CFR 1.46. If the applicant is an applicant under 37 CFR 1.46 (assignee, person to whom the inventor is obligated to assign, or person who otherwise shows sufficient proprietary interest) together with one or more joint inventors, then the joint inventor or inventors who are also the applicant should be identified in this section.

Clear

● Assignee	Legal Representative under 35 U.S.C. 117	Joint Inventor
Person to whom the inventor is obligated to assign.	Person who shows sufficient proprietary interest	

If applicant is the legal representative, indicate the authority to file the patent application, the inventor is:

Name of the Deceased or Legally Incapacitated Inventor :

If the Applicant is an Organization check here. ☒

Organization Name	AGP América S.A.

Under the Paperwork Reduction Act of 1995, no persons are required to respond to a collection of information unless it contains a valid OMB control number.

Application Data Sheet 37 CFR 1.76	Attorney Docket Number	1511.20300
	Application Number	
Title of Invention	AUTOMOTIVE LAMINATED GLAZING WITH ENHANCED SPECTRAL PROPERTIES USING BAND ABSORPTION DYES	

Mailing Address Information For Applicant:			
Address 1	Calle 15 # 35-39		
Address 2			
City	Bogota	**State/Province**	
Country i	CO	Postal Code	
Phone Number		Fax Number	
Email Address			

Additional Applicant Data may be generated within this form by selecting the Add button. Add

Assignee Information including Non-Applicant Assignee Information:

Providing assignment information in this section does not subsitute for compliance with any requirement of part 3 of Title 37 of CFR to have an assignment recorded by the Office.

Assignee 1

Complete this section if assignee information, including non-applicant assignee information, is desired to be included on the patent application publication . An assignee-applicant identified in the "Applicant Information" section will appear on the patent application publication as an applicant. For an assignee-applicant, complete this section only if identification as an assignee is also desired on the patent application publication.

Remove

If the Assignee or Non-Applicant Assignee is an Organization check here. ☐

Prefix	**Given Name**	Middle Name	**Family Name**	Suffix

Mailing Address Information For Assignee including Non-Applicant Assignee:			
Address 1			
Address 2			
City		**State/Province**	
Country i		Postal Code	
Phone Number		Fax Number	
Email Address			

Additional Assignee or Non-Applicant Assignee Data may be generated within this form by selecting the Add button. Add

Under the Paperwork Reduction Act of 1995, no persons are required to respond to a collection of information unless it contains a valid OMB control number.

Application Data Sheet 37 CFR 1.76	Attorney Docket Number	1511.20300
	Application Number	
Title of Invention	AUTOMOTIVE LAMINATED GLAZING WITH ENHANCED SPECTRAL PROPERTIES USING BAND ABSORPTION DYES	

Signature:

Remove

NOTE: This form must be signed in accordance with 37 CFR 1.33. See 37 CFR 1.4 for signature requirements and certifications.

Signature	/Joseph L. Morales/			Date (YYYY-MM-DD)	2016-12-30
First Name	Joseph	Last Name	Morales	Registration Number	58835

Additional Signature may be generated within this form by selecting the Add button. Add

This collection of information is required by 37 CFR 1.76. The information is required to obtain or retain a benefit by the public which is to file (and by the USPTO to process) an application. Confidentiality is governed by 35 U.S.C. 122 and 37 CFR 1.14. This collection is estimated to take 23 minutes to complete, including gathering, preparing, and submitting the completed application data sheet form to the USPTO. Time will vary depending upon the individual case. Any comments on the amount of time you require to complete this form and/or suggestions for reducing this burden, should be sent to the Chief Information Officer, U.S. Patent and Trademark Office, U.S. Department of Commerce, P.O. Box 1450, Alexandria, VA 22313-1450. DO NOT SEND FEES OR COMPLETED FORMS TO THIS ADDRESS. **SEND TO: Commissioner for Patents, P.O. Box 1450, Alexandria, VA 22313-1450.**

Privacy Act Statement

The Privacy Act of 1974 (P.L. 93-579) requires that you be given certain information in connection with your submission of the attached form related to a patent application or patent. Accordingly, pursuant to the requirements of the Act, please be advised that: (1) the general authority for the collection of this information is 35 U.S.C. 2(b)(2); (2) furnishing of the information solicited is voluntary; and (3) the principal purpose for which the information is used by the U.S. Patent and Trademark Office is to process and/or examine your submission related to a patent application or patent. If you do not furnish the requested information, the U.S. Patent and Trademark Office may not be able to process and/or examine your submission, which may result in termination of proceedings or abandonment of the application or expiration of the patent.

The information provided by you in this form will be subject to the following routine uses:

1. The information on this form will be treated confidentially to the extent allowed under the Freedom of Information Act (5 U.S.C. 552) and the Privacy Act (5 U.S.C. 552a). Records from this system of records may be disclosed to the Department of Justice to determine whether the Freedom of Information Act requires disclosure of these records.

2. A record from this system of records may be disclosed, as a routine use, in the course of presenting evidence to a court, magistrate, or administrative tribunal, including disclosures to opposing counsel in the course of settlement negotiations.

3. A record in this system of records may be disclosed, as a routine use, to a Member of Congress submitting a request involving an individual, to whom the record pertains, when the individual has requested assistance from the Member with respect to the subject matter of the record.

4. A record in this system of records may be disclosed, as a routine use, to a contractor of the Agency having need for the information in order to perform a contract. Recipients of information shall be required to comply with the requirements of the Privacy Act of 1974, as amended, pursuant to 5 U.S.C. 552a(m).

5. A record related to an International Application filed under the Patent Cooperation Treaty in this system of records may be disclosed, as a routine use, to the International Bureau of the World Intellectual Property Organization, pursuant to the Patent C o o p eration Treaty.

6. A record in this system of records may be disclosed, as a routine use, to another federal agency for purposes of National Security review (35 U.S.C. 181) and for review pursuant to the Atomic Energy Act (42 U.S.C. 218(c)).

7. A record from this system of records may be disclosed, as a routine use, to the Administrator, General Services, or his/her designee, during an inspection of records conducted by GSA as part of that agency's responsibility to recommend improvements in records management practices and programs, under authority of 44 U.S.C. 2904 and 2906. Such disclosure shall be made in accordance with the GSA regulations governing inspection of records for this purpose, and any other relevant (i.e., GSA or Commerce) directive. Such disclosure shall not be used to make determinations about individuals.

8. A record from this system of records may be disclosed, as a routine use, to the public after either publication of the application pursuant to 35 U.S.C. 122(b) or issuance of a patent pursuant to 35 U.S.C. 151. Further, a record may be disclosed, subject to the limitations of 37 CFR 1.14, as a routine use, to the public if the record was filed in an application which became abandoned or in which the proceedings were terminated and which application is referenced by either a published application, an application open to public inspections or an issued patent.

9. A record from this system of records may be disclosed, as a routine use, to a Federal, State, or local law enforcement agency, if the USPTO becomes aware of a violation or potential violation of law or regulation.

Electronic Acknowledgement Receipt

EFS ID:	27936290
Application Number:	62440448
International Application Number:	
Confirmation Number:	8816
Title of Invention:	AUTOMOTIVE LAMINATED GLAZING WITH ENHANCED SPECTRAL PROPERTIES USING BAND ABSORPTION DYES
First Named Inventor/Applicant Name:	Mario Arturo Mannheim Astete
Customer Number:	130961
Filer:	Joseph L. Morales
Filer Authorized By:	
Attorney Docket Number:	1511.20300
Receipt Date:	30-DEC-2016
Filing Date:	
Time Stamp:	10:10:50
Application Type:	Provisional

Payment information:

Submitted with Payment	yes
Payment Type	CARD
Payment was successfully received in RAM	$260
RAM confirmation Number	123016INTEFSW10113000
Deposit Account	
Authorized User	
The Director of the USPTO is hereby authorized to charge indicated fees and credit any overpayment as follows:	

File Listing:

Document Number	Document Description	File Name	File Size(Bytes)/ Message Digest	Multi Part /.zip	Pages (if appl.)
1	Specification	11607.PDF	345925 f881e28353f3c1a4d2485d8bced11db2d5335426	no	13
Warnings:					
Information:					
2	Provisional Cover Sheet (SB16)	11604.PDF	1477179 c5a057fbe08d8ba0a23574300b90f6bfc9f42c3f	no	3
Warnings:					
Information:					
3	Application Data Sheet	11610.PDF	1819035 4363b4ca0854cceada67c3c7e8d11ab1218212a1	no	7
Warnings:					
Information:					
4	Fee Worksheet (SB06)	fee-info.pdf	30070 52ac9d1d709e83bdb9ae914f6447bdd0b94dec5e	no	2
Warnings:					
Information:					
			Total Files Size (in bytes):	3672209	

This Acknowledgement Receipt evidences receipt on the noted date by the USPTO of the indicated documents, characterized by the applicant, and including page counts, where applicable. It serves as evidence of receipt similar to a Post Card, as described in MPEP 503.

New Applications Under 35 U.S.C. 111
If a new application is being filed and the application includes the necessary components for a filing date (see 37 CFR 1.53(b)-(d) and MPEP 506), a Filing Receipt (37 CFR 1.54) will be issued in due course and the date shown on this Acknowledgement Receipt will establish the filing date of the application.

National Stage of an International Application under 35 U.S.C. 371
If a timely submission to enter the national stage of an international application is compliant with the conditions of 35 U.S.C. 371 and other applicable requirements a Form PCT/DO/EO/903 indicating acceptance of the application as a national stage submission under 35 U.S.C. 371 will be issued in addition to the Filing Receipt, in due course.

New International Application Filed with the USPTO as a Receiving Office
If a new international application is being filed and the international application includes the necessary components for an international filing date (see PCT Article 11 and MPEP 1810), a Notification of the International Application Number and of the International Filing Date (Form PCT/RO/105) will be issued in due course, subject to prescriptions concerning national security, and the date shown on this Acknowledgement Receipt will establish the international filing date of the application.

OLARTEMOURE
OLARTE MOURE & ASOCIADOS
Abogados - Attorneys

Carlos R. Olarte
Juan G. Moure

Ana María Frieri

Alexander Agudelo
Juan F. Acosta
Bibiana Agudelo
Mónica Guevara
Andrés Alvarado
Mauricio Ávila
Isabella Herrera
Alejandro Moure
Miguel F. Porras
Melissa J. Cely
Camila Vásquez
Catalina Amaya
Catalina Jiménez
Daniela González
Gina A. Arias
Liliana Galindo
Wilson J. Espíndola
Juan Carlos Suárez
José Alejandro Vela
Salvatore Marcenaro
Elsa B. González
Jorge A. Calderón
Javier A. Becerra
Luis E. Otero
Laura J. Parra
Juan David Rocha
María A. Troncoso
Karen L. García
Daniel Trujillo
Alejandro Loynaz

Medellín
María C. Múnera
Eddie Manotas
Adrián Santamaría
Camilo A. Bernal
Daniela Lopera
Juliana Arroyave C.
Daniel R. Durango
Laura Munera
Cristian H. Ocampo
Sara López Chacón

Barranquilla
Beatriz E. Morales
José J. Dangond
Iván D. Herrera

Bucaramanga
Javier F. Arellano
Viviana A. Salamanca

Tokio
Carlos A. Parra

Señores
SUPERINTENDENCIA DE INDUSTRIA Y COMERCIO
DIRECCIÓN DE NUEVAS CREACIONES
E. S. D.

Re: Expediente No. NC2017/0005591
Solicitud de Patente de Invención titulada: "VIDRIO LAMINADO AUTOMOTRIZ CON PROPIEDADES ESPECTRALES MEJORADAS UTILIZANDO TINTES DE LA BANDA DE ABSORCIÓN"
Solicitante: AGP AMERICA S.A.
Nuestra Ref.: P2017/000107

MEMORIAL DE ALCANCE

CARLOS R. OLARTE, mayor de edad y vecino de Bogotá, D.C., identificado tal como aparece al pie de mi firma, en mi carácter de apoderado de la sociedad en referencia, me permito aportar el documento de prioridad número US 62/440,448 de fecha 30 de diciembre de 2016.

Rogamos tomar atenta nota y proceder de conformidad.

Atentamente,

CARLOS R. OLARTE
CC. No.79.782.747 de Bogotá
T.P. 74.295