OLARTEMOURE
OLARTE MOURE & ASOCIADOS
Abogados - Attorneys

Carlos R. Olarte
Juan G. Moure

Ana María Frieri

Alexander Agudelo
Juan F. Acosta
Bibiana Agudelo
Mónica Guevara
Andrés Alvarado
Mauricio Ávila
Isabella Herrera
Alejandro Moure
Miguel F. Porras
Melissa J. Cely
Camila Vásquez
Catalina Amaya
Catalina Jiménez
Daniela González
Gina A. Arias
Liliana Galindo
Wilson J. Espíndola
Juan Carlos Suárez
José Alejandro Vela
Salvatore Marcenaro
Elsa B. González
Jorge A. Calderón
Javier A. Becerra
Luis E. Otero
Laura J. Parra
Juan David Rocha
María A. Troncoso
Karen L. García
Daniel Trujillo
Alejandro Loynaz

Medellín
María C. Múnera
Eddie Manotas
Adrián Santamaría
Camilo A. Bernal
Daniela Lopera
Juliana Arroyave C.
Daniel R. Durango
Laura Munera
Cristian H. Ocampo
Sara López Chacón

Barranquilla
Beatriz E. Morales
José J. Dangond
Iván D. Herrera

Bucaramanga
Javier F. Arellano
Viviana A. Salamanca

Tokio
Carlos A. Parra

Señores
SUPERINTENDENCIA DE INDUSTRIA Y COMERCIO
DIRECCIÓN DE NUEVAS CREACIONES
E. S. D.

Re: Expediente No. NC2017/0005583
Solicitud de Patente de Invención titulada: "MÉTODO Y APARATO PARA CURVAR VIDRIO DELGADO"
Solicitante: AGP AMERICA S.A.
Nuestra Ref.: P2017/000106

MEMORIAL DE ALCANCE

CARLOS R. OLARTE, mayor de edad y vecino de Bogotá, D.C., identificado tal como aparece al pie de mi firma, en mi carácter de apoderado de la sociedad en referencia, me permito aportar el documento de prioridad número US 62/440,444 de fecha 30 de diciembre de 2016.

Rogamos tomar atenta nota y proceder de conformidad.

Atentamente,

CARLOS R. OLARTE
CC. No.79.782.747 de Bogotá
T.P. 74.295

7646563

THE UNITED STATES OF AMERICA

TO ALL TO WHOM THESE PRESENTS SHALL COME:

UNITED STATES DEPARTMENT OF COMMERCE

United States Patent and Trademark Office

August 16, 2017

THIS IS TO CERTIFY THAT ANNEXED HERETO IS A TRUE COPY FROM THE RECORDS OF THE UNITED STATES PATENT AND TRADEMARK OFFICE OF THOSE PAPERS OF THE BELOW IDENTIFIED PATENT APPLICATION THAT MET THE REQUIREMENTS TO BE GRANTED A FILING DATE UNDER 35 USC 111.

APPLICATION NUMBER: ***62/440,444***
FILING DATE: ***December 30, 2016***

THE COUNTRY CODE AND NUMBER OF YOUR PRIORITY APPLICATION, TO BE USED FOR FILING ABROAD UNDER THE PARIS CONVENTION, IS ***US62/440,444***

UNITED STATES PATENT AND TRADEMARK OFFICE
DEPARTMENT OF COMMERCE

Certified by

Michelle K. Lee

Under Secretary of Commerce
for Intellectual Property
and Director of the United States
Patent and Trademark Office

METHOD AND APPARATUS FOR BENDING THIN GLASS

Field of Invention

The present invention relates generally to the field of light weight automotive laminates and, more particularly, to an improved method and apparatus for bending thin glass.

Abstract

The present invention provides for a method and apparatus for bending multiple sheet of thin glass at the same time on a single set of molds. Multiple sheets of thin glass are stacked onto a full surface female mold. A partial surface male mold is placed onto the thin glass stack. The male serves to hold the edges in place and prevents the formation of wrinkles as the glass is heated and sags to conform to the shape of the female mold. Optionally, the top mold can be enclosed and pressurized to provide a pneumatic pressure assist to form the glass. In addition, the bottom mold can be enclosed to allow for vacuum assist to form the glass.

Background of the invention

In response to the regulatory requirements for increased automotive fuel efficiency as well as the growing public awareness and demand for environmentally friendly products, automotive original equipment manufacturers, around the world, have been working to improve the efficiency of their vehicles.

One of the key elements of the strategy to improve efficiency has been the concept of light weighting. Often times, more traditional, less expensive, conventional materials and processes are being replaced by innovative new materials and processes which while sometime being more expensive, still have higher utility than the materials and processes being replaced due to their lower weight and the corresponding increase in fuel efficiency. Vehicle glazing has been no exception.

For many years, the standard automotive windshield has had a thickness of 5.4 mm. In more recent years, we have seen the thickness decrease to 4.75 mm. While a reduction of 0.65 mm

may not seem significant, at a density of 2600 kg per cubic meter for standard soda lime glass, each millimeter that the thickness is reduced, decreases the weight by 2.6 kg per square meter. The weight of a typical 1.2 square meter windshield going from 5.4 mm to 4.75 mm is reduced by a little over 2 kg. On a vehicle with a total of 6 square meters of glass, a 1 mm reduction on all of the windows translates into a savings of 15.6 kg.

However there are limits as to have thin the glazing can be. Stress under wind load has always been a factor. With the trend towards increasing in the size of windshields in particular, wind load is even more of a concern. Glass is also becoming a structural element in more and more vehicles. The glazing contributes to the stiffness and strength of the car. Fixed glass, once bonded with a relatively soft curing poly-urethane, is being mounted with higher modulus adhesives. As a result, the glass, once isolated by rubber gaskets and soft butyl adhesives, is now much more subject to loading from the bumps in the road and vehicle torsion.

Today, windshields with a 2.1 mm outer ply, a 1.6 mm inner ply and a 0.76 mm plastic interlayer totaling just under 4.5 mm in total thickness are becoming common. This may be close to the limit of what can be done with conventional annealed soda lime glass.

Annealed glass is glass that has been slowly cooled from the bending temperature through the glass transition range. This is done to relieve stress in the glass. Annealed glass breaks into large shards with sharp edges. In a laminate, two sheets of annealed glass are glued together using a sheet of thermo plastic. If the laminated glass should break, the plastic layer holds the shards of glass together, helping to maintain the structural integrity of the glass. The shards of broken glass are held together much like the pieces of a jigsaw puzzle. A vehicle with a broken windshield can still be operated. On impact, the plastic layer also helps to prevent penetration by the occupant or by objects striking the laminate from the exterior.

Heat strengthened glass, with a compressive strength in the range of 10,000 PSI, can be used in all vehicle positions other than the windshield. Heat strengthened (tempered) glass has a layer of high compression on the outside surfaces of the glass, balanced by tension on the inside of the glass. When tempered glass breaks, the tension and compression are no longer in balance and the glass breaks into small beads with dull edges. Tempered glass is much stronger than annealed laminated glass. The limits of the typical automotive heat strengthening process are

in the 3.2 mm to 3.6 mm range. This is due to the rapid heat transfer that is required. It is not possible to achieve the high surface compression needed with thinner glass using the typical blower type low pressure air quenching systems. Fortunately, there are other materials and processes available.

Glass can be chemically tempered. In this process, ions in and near the outside surface of the glass are exchanged with ions that are larger. This places the outer layer of glass in compression. The maximum strength of chemically tempered soda lime glass is limited. However, with some other glass compositions, compressive strengths in excess of 100k PSI are possible. The practice of chemically tempering glass is well known to those of ordinary skill in the art and shall not be detailed here.

Unlike heat tempered glass, chemically tempered glass breaks into shards rather than beads. This property allows for its use in windshields. However, in standard windshield thicknesses of 2.0 mm or greater, chemically strengthened glass would actually be too strong. In the event of a crash and a head impact, the windshield must break, absorbing the energy of the impact rather than the head of the occupant. Therefore, depending upon the tempered strength, thicknesses of 1.1 mm or less must be used.

The majority of the vehicles on the road today have windshields that were made using the gravity bending process. In this process, the plies of glass that form the windshield are placed onto a mold, which supports the glass near the edges, and heated. The glass softens and sags to shape. Sometimes, for more complex shapes, gravity is assisted by pneumatic pressure and/or a partial or full surface pressing. As the plies of glass to be laminated are bent in sets, the surfaces, while they may have substantial variation from windshield to windshields, are a near perfect match.

A growing portion of windshields are made by the singlet pressing process. With this process, single sheets of glass are bent using a press to form the glass to shape. The resulting shape is much closer to design and the process can hold tighter tolerances across the surface. But, when the individually pressed sheets are glass are laminated, surface to surface variation can be more of a problem than with gravity bent glass. Thin glass is difficult to bend using either of these bending process.

During gravity bending, the edges of the sheets of glass have a tendency to lift off of the mold and form wrinkles. If the plies of glass are of different compositions, with softening points that are too far apart, it may not be possible to gravity bend at all as the glass with the lower softening point will become too soft leading to marking and distortion. In this case, the different glass types must be bent separately.

However, singlet pressing also has problems. The glass is conveyed through the heating section on rolls. The thin glass tends to bend under its own weight resulting in the leading edge hitting the rollers and even falling through. As can be appreciated, a better process is needed.

Description of the Drawings

Figure 1 is a view of the female bending mold;
Figure 2 is a view of the female bending mold with flat sheet of glass having a higher glass transition point than the thin glass to be bent;
Figure 3 is a view of the female bending mold with the higher glass transition point bent to shape;
Figure 4 is a view of the female bending mold loaded with thin flat glass;
Figure 5 is a detailed view of the female bending mold loaded with thin flat glass;
Figure 6 is a detailed view of the mold with male ring in place;
Figure 7 is a view of the top male plenum in raised position;
Figure 8 is a view of the top male plenum and mold;
Figure 9 is a view of the bottom plenum;
Figure 10 is a view of the full surface female mold.

Reference Numbers

2	Bending mold base	22	Full surface female mold
4	Bending mold female ring	30	Vacuum holes
6	Thin glass	32	Top plenum air inlet
8	Male ring mold	34	Top plenum back
20	Flat sheet of glass used to form full surface female mold	36	Bottom plenum back
		38	Bottom plenum vacuum inlet

Detailed description of the invention

Referring now in detail to the illustrative embodiment depicted in the accompanying drawings for carrying out this invention, FIG. 1 shows a bending mold base **2** and a bending mold female ring **4** for bending sheets of glasses. It should be noted, that the mold base **2** can vary its shape, geometry, dimensions, and area depending on the type of glass required to be manufactured. Mold base **2** is shown for reference, but it should be noted that any type of base can be used to carry out the invention.

In order to carry out the method of the present invention, a female mold has to be formed. The method and apparatus of the present invention avoid glass wrinkles and provide uniformity to form the sheet of glasses. A flat sheet of glass **20** with higher glass transition point that the thin glass to be bent has to be provided in the lower part of the set of glasses. That flat glass **20** can be bended in a separate step, in a separate tool. In additional embodiments of the present invention, the flat glass **20**, as shown in FIG. 3, is subject to its glass transition point, so that it is bent to shape the bending mold female ring **4**. Once the glass **20** has reached the shape of the ring **4**, it is then allowed to cool. Once the glass **20** has been let to be cooled, it serves as a full surface female mold **22** when pressing the thin glasses, as can be seen in FIG. 4. Alternately, other type of molds can be use, for example, a ceramic or metal full surface mold can be fabricated and used as a mold for carrying out the method of the present invention. The full surface female mold **22** can be formed by any means and of any suitable material known in the art.

As can be seen in FIG. 5, one or more sheets of thin glass **6** are loaded and placed onto the full surface female mold **22**. It should be noted that the number of sheets that can be bent at the same time will depend upon the thickness of the glass and the complexity of the shape. Then, the thin glass sheets **6** will tend to sag and conform to the periphery of the female mold **22** under their own weight.

As can be seen in FIG. 6, a male ring type mold **8** is then placed on the stack of thin glass **6**. The male ring **8** serves to hold the edge of thin glass **6** down, preventing wrinkling. In additional embodiments, the male ring **8** is held in place by its own weight, or additional weight can be

added to the male ring **8** if needed. In addition, clamps may be used to force the thin glass **6** to conform to the female ring **22** if needed (not shown). In preferred embodiments, the male ring **8** mold is open to allow for radiant heating of the thin glass **6** and accelerate the cycle time. This step prevents wrinkles from forming near the edges of thin glass **6**. The edges of male ring **8** and female ring **4** may be covered with a material that is softer than glass to prevent marking of the glass.

Optionally, after the thin glass **6** has sagged to a pre-determined point, a backing plate **34** is lowered onto the male ring **8** and docked so as to enclose a volume of air and form a plenum, as shown in FIG. 7. The plenum is then pneumatically pressurized, and then heated by means of a hot air flow entering into the top plenum air inlet **32**. The heat forces the thin glass **6** to conform to the shape of the full surface female mold **22**.

In additional embodiments, as the one shown in FIG. 8, the top male plenum **34** is pressurized using hot air, forcing the soft thin glass **6** to conform to the full surface female mold **22**. The point of application, duration, air temperature and pressure are varied as needed to obtain the desired shape. The application of heating should be performed until reaching the glass transition point. Optionally, the bottom female ring may be enclosed to form a plenum, as shown in FIG. 9.

In addition to the previous step or in place of, vacuum can be applied to the full surface female mold **22** in order to press so as to assist in the bending of the thin glass **6**. Vacuum can be also applied with the glass cold, to help the glass to conform to the ring and/or at any point during bending, using the vacuum holes **30** shown in FIG. 10. Vacuum can be used alone or in conjunction with the top male plenum **34**. Optionally, rather than or in addition to the holes **30**, a vacuum ring can be applied to the full surface female mold **22** and the thin glass **6**.

The method of the present invention has a number of advantages:

- The pneumatic and/or vacuum assist decreasing the bending cycle time by up to half.
- The male ring mold results in prevents wrinkles from forming.
- The male ring mold also serves to hold the thin glass in place preventing it from sagging to soon.

- The use of a bent glass full surface mold reduces the tooling cost as compared to a machine cut or cast mold.
- The use of the full surface female mold results in dimensional surface control sufficient to allow for lamination of plies of different types of glass that were not bent on the same mold at the same time, increasing the capacity of bending thin glasses.
- The present invention improves yield especially on optic due to reduced temperature.
- The present invention improves optic in transmission due reduced temperature. This also improves reflection.
- The present invention also maintains glass edge during complete bending process.

In a first embodiment, a sheet of 8 mm thick Lithium silicate glass is used as the material for the full surface female mold **22**. The glass **20** is formed on a cast ceramic mold. The bent glass **20** is then supported on a female ring bending mold **4** and serves as the full surface female press. The full surface female mold **22** is covered with a layer of glass **6** cloth to help prevent marking of the thin glass. Such a press can be used for at least several hundred bending cycles. Six sheets of 0.7 mm aluminosilicate glass **6** are placed on the full surface female mold **22**. The male ring **8** is then applied. The edge of the male ring **8**, that comes into contact with the thin glass **6**, is covered with glass cloth or and equivalent material to prevent marking of the thin glass. No additional weight or clamping is needed to hold the male ring **8** in place although it may be needed on some parts.

In a second embodiment, the steps of embodiment one are repeated. When the thin glass **6** has been heated and softened, the plenum back **34** is lowered onto the male ring **8**. The plenum is pressurized using hot air from a low pressure blower. The pneumatic pressure forces the softened thin glass **6** to conform to the full surface of the female mold **22**.

In a third embodiment, the steps of embodiment one are repeated and vacuum is applied to the full surface female plenum **36** to assist in the bending of the thin glass **6**.

In a forth embodiment, the steps of embodiment two are repeated and vacuum is applied to the full surface female plenum **36** to assist in the bending of the thin glass **6**.

The forms of the invention shown and described in this specification represent illustrative preferred embodiments and it is understood that various changes may be made without departing from the spirit of the invention as defined in the following claimed subject matter.

Claims

1. A method for bending thin glass, comprising:
   a) stacking one or more sheets of the thin glass onto a full surface bottom mold;
   b) applying a partial surface top mold to said stack of thin glass, said top mold contacting the glass in at least the periphery area of the glass;
   c) heating said thin glass to its glass transition point of the thin glass; and
   d) allowing thin glass to sag under the force of gravity.

2. The method of claim 1, wherein the thickness of the thin glass is of less than 1.8 mm.

3. The method of claim 1, further comprising a means to apply a clamping force to the glass.

4. The method of claim 1, further comprising a means to align said glass and molds.

5. The method of claim 1, further comprising a full surface bottom mold formed by bending a sheet of glass having a glass transition point that is sufficiently higher than that of the said thin glass and having a thickness sufficient for said mold to retain its shape during bending of said thin glass.

6. The method of claim 1, wherein the said partial surface top mold comprises a ring type structure.

7. The method of claim 1, further comprising applying pneumatic pressure to said top mold constructed such as to enclose a volume of air and serve as a plenum.

8. The method of claim 1, further comprising applying vacuum to said full surface bottom mold constructed such as to enclose a volume of air and serve as a plenum to allow evacuation of air between full surface mold and thin glass.

9. An apparatus for bending thin glass, comprising:
   – a bending mold base;

- a bending mold female ring that receives a bended glass to form a full surface female mold;
- a male ring mold placed onto the thin glass.

10. The apparatus of Claim 9, wherein additional weight may be added to the male ring mold.

11. The apparatus of Claim 9, wherein clamps may be used to force the thin glass to conform to the female ring.

12. The apparatus of Claim 9, wherein the top side of the male ring may be enclosed to form a plenum.

13. The apparatus of Claim 9, wherein the top side of the male plenum is pressurized using hot air.

14. The apparatus of Claim 9, wherein the bottom side of the female ring may be enclosed to form a plenum.

15. The apparatus of Claim 9, wherein vacuum can be applied into the plenum formed in the male ring to assist bending.

16. The apparatus of Claim 15, wherein vacuum can be used alone or in conjunction with the top male plenum.

17. The apparatus of Claim 15, wherein the enclosed male ring has holes to facilitate vacuum.

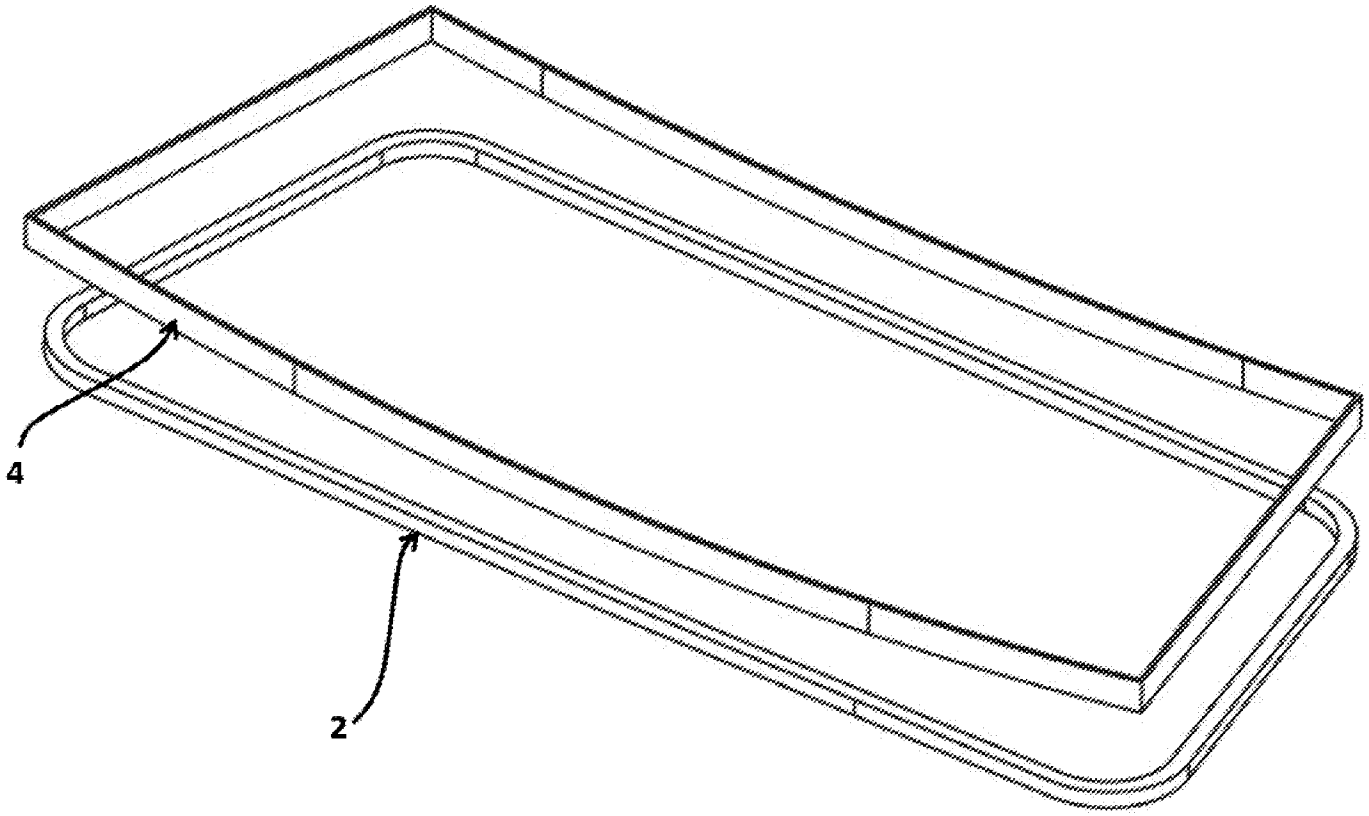

Fig. 1

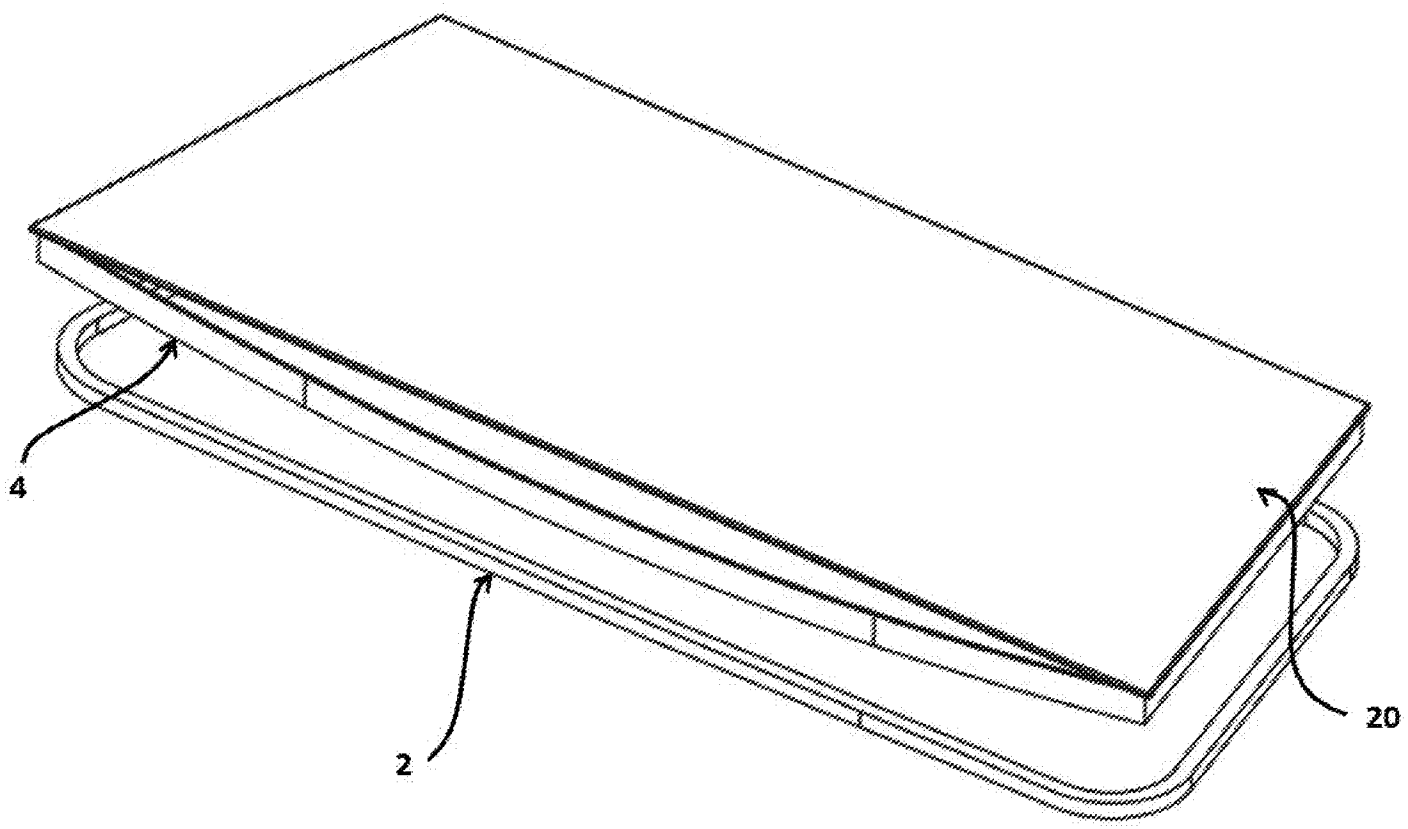

Fig. 2

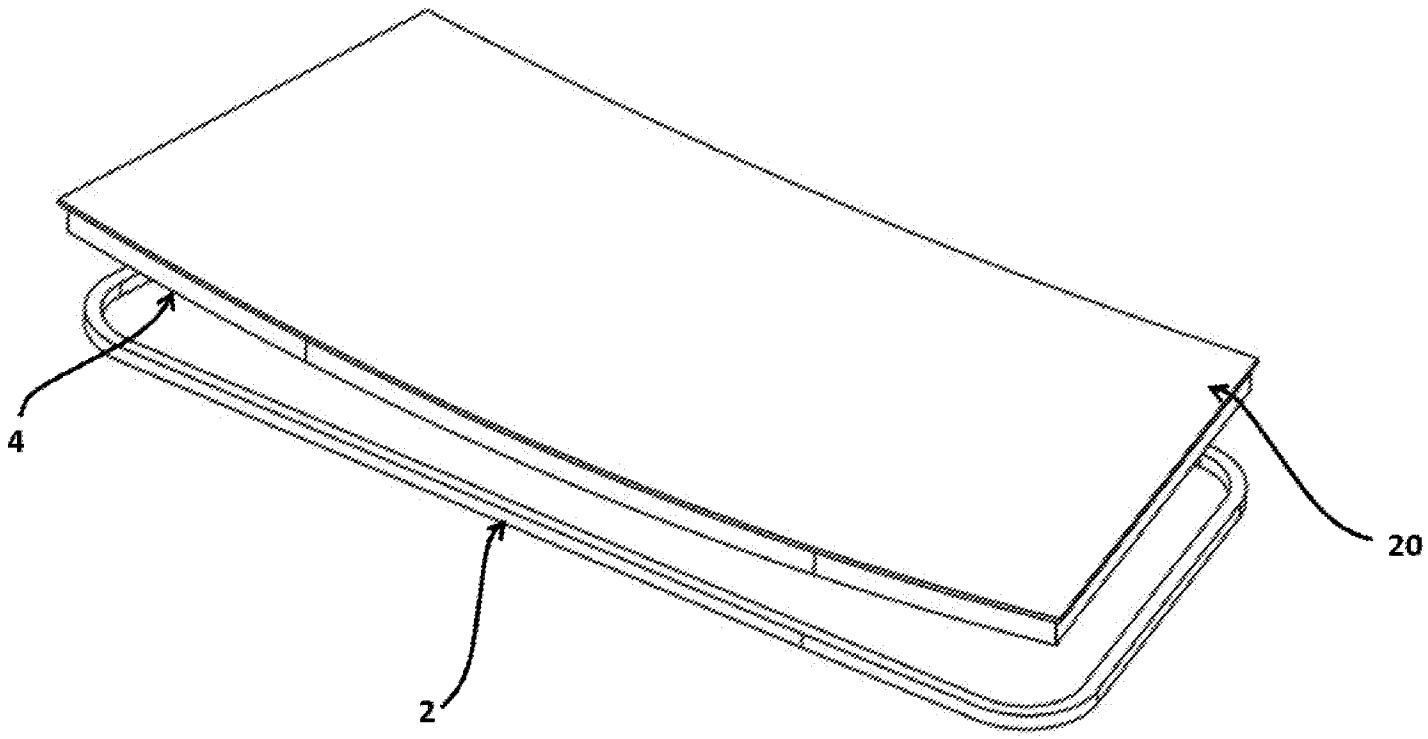

Fig. 3

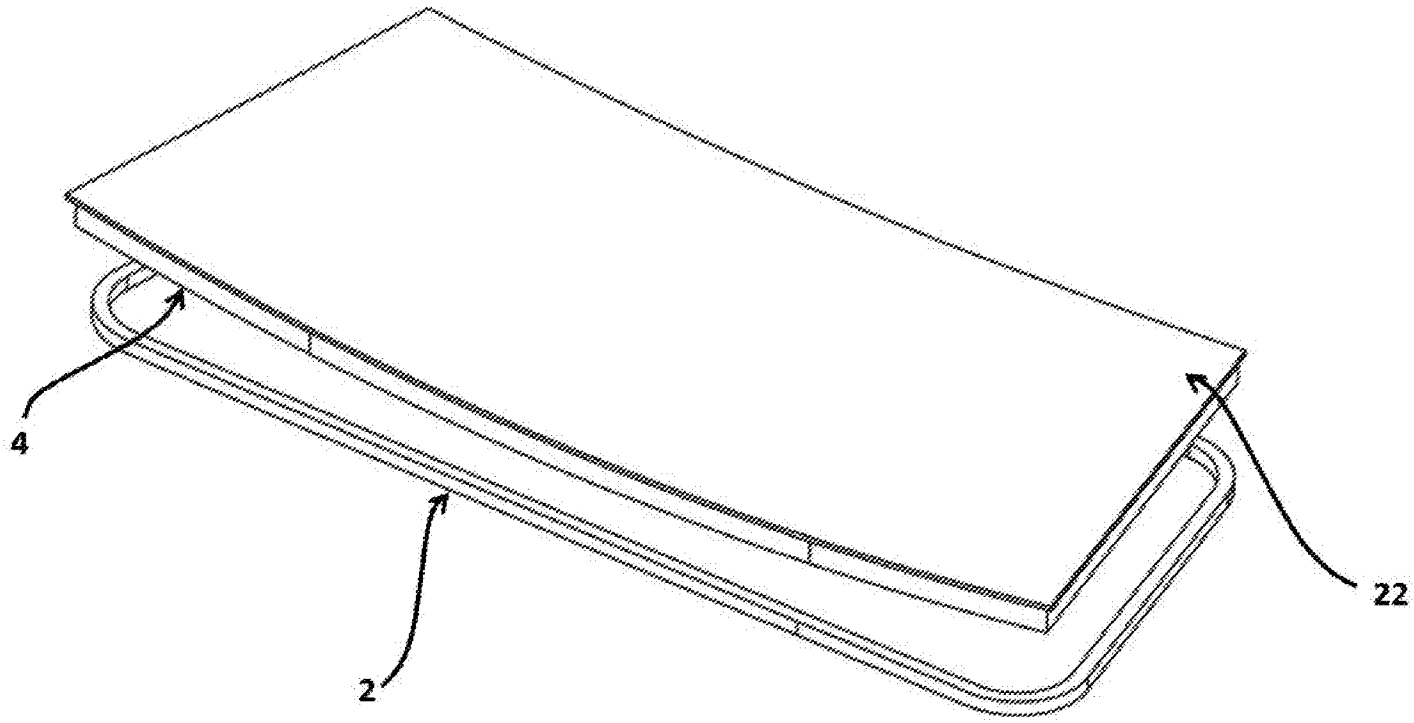

Fig. 4

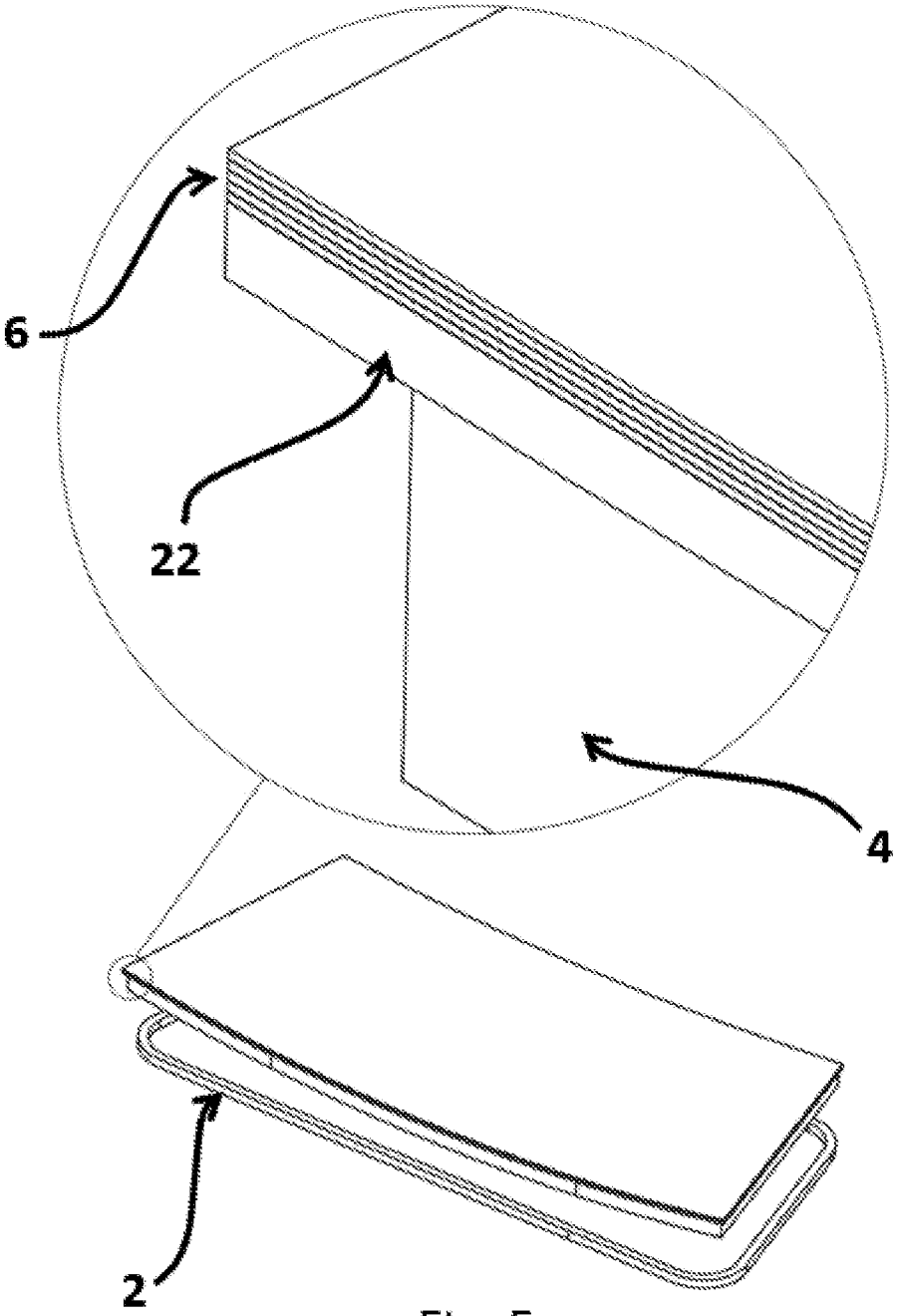

Fig. 5

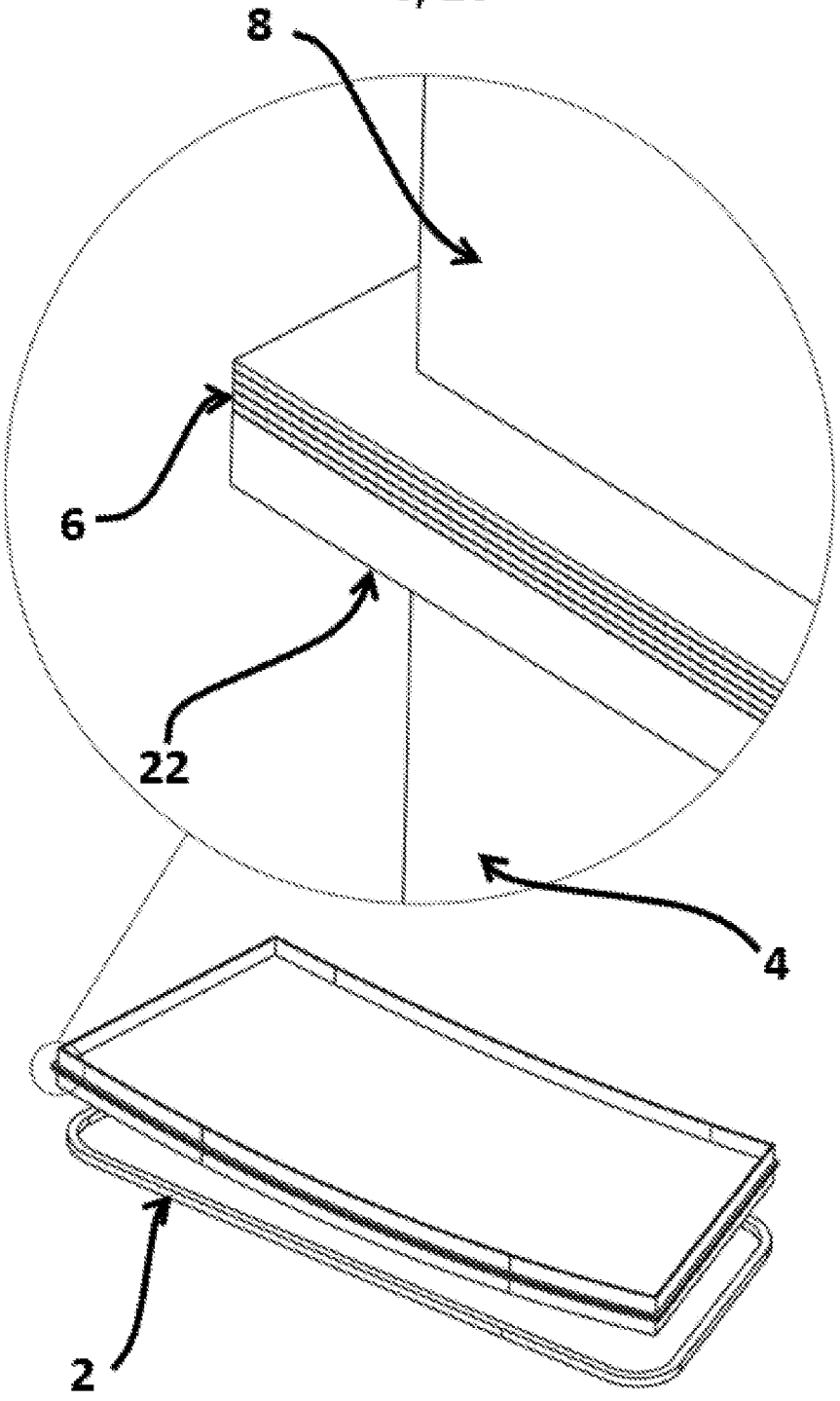

Fig. 6

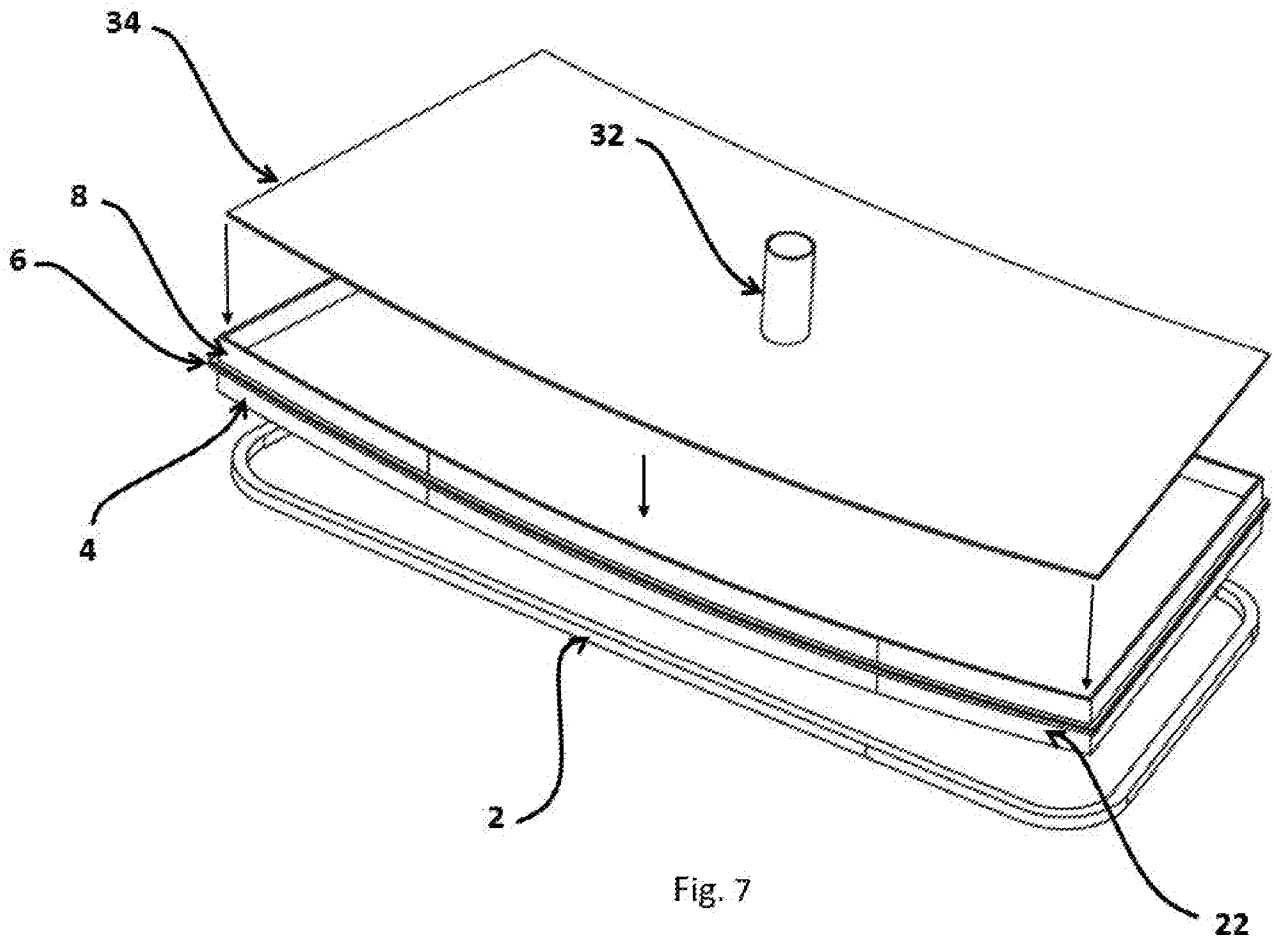

Fig. 7

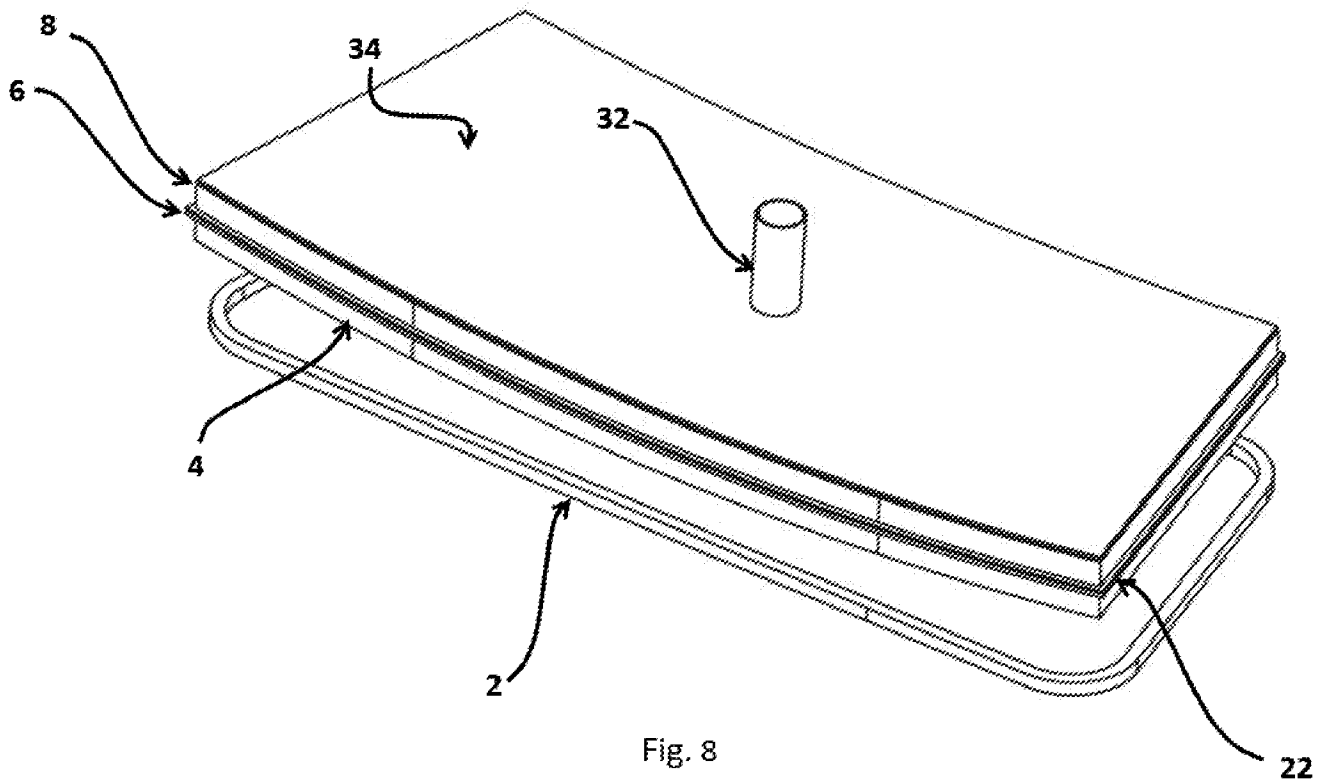

Fig. 8

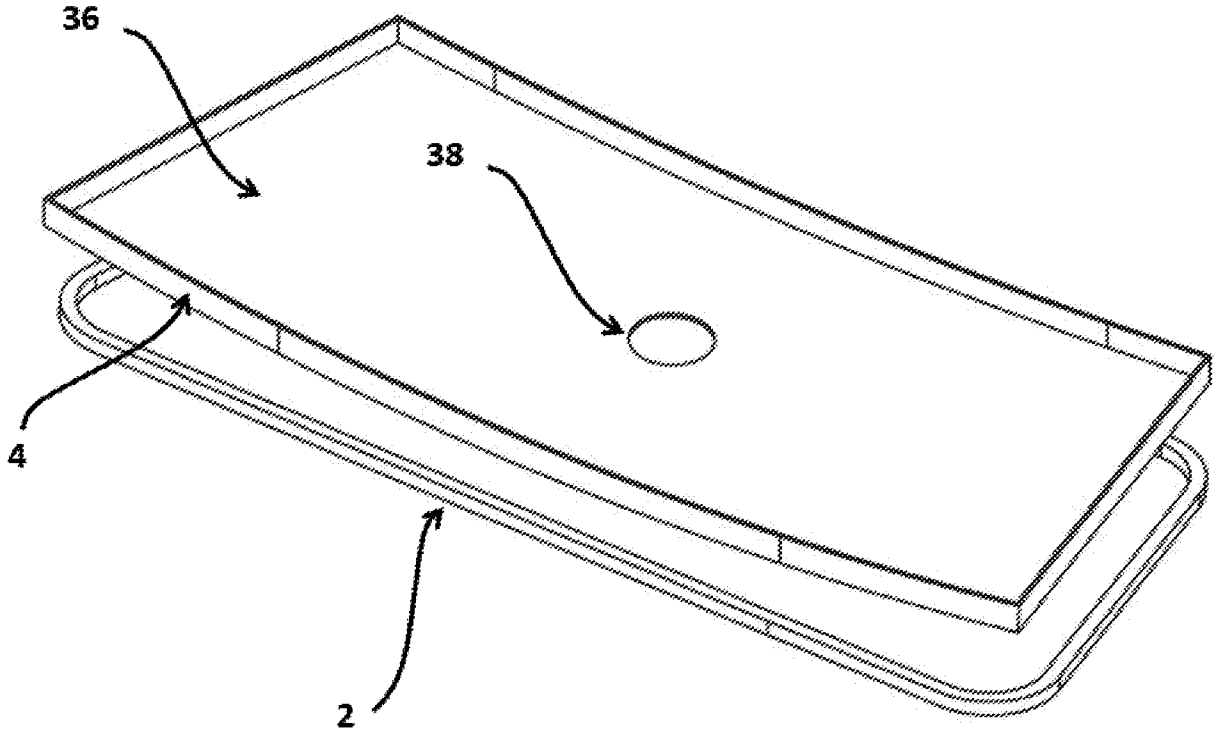

Fig. 9

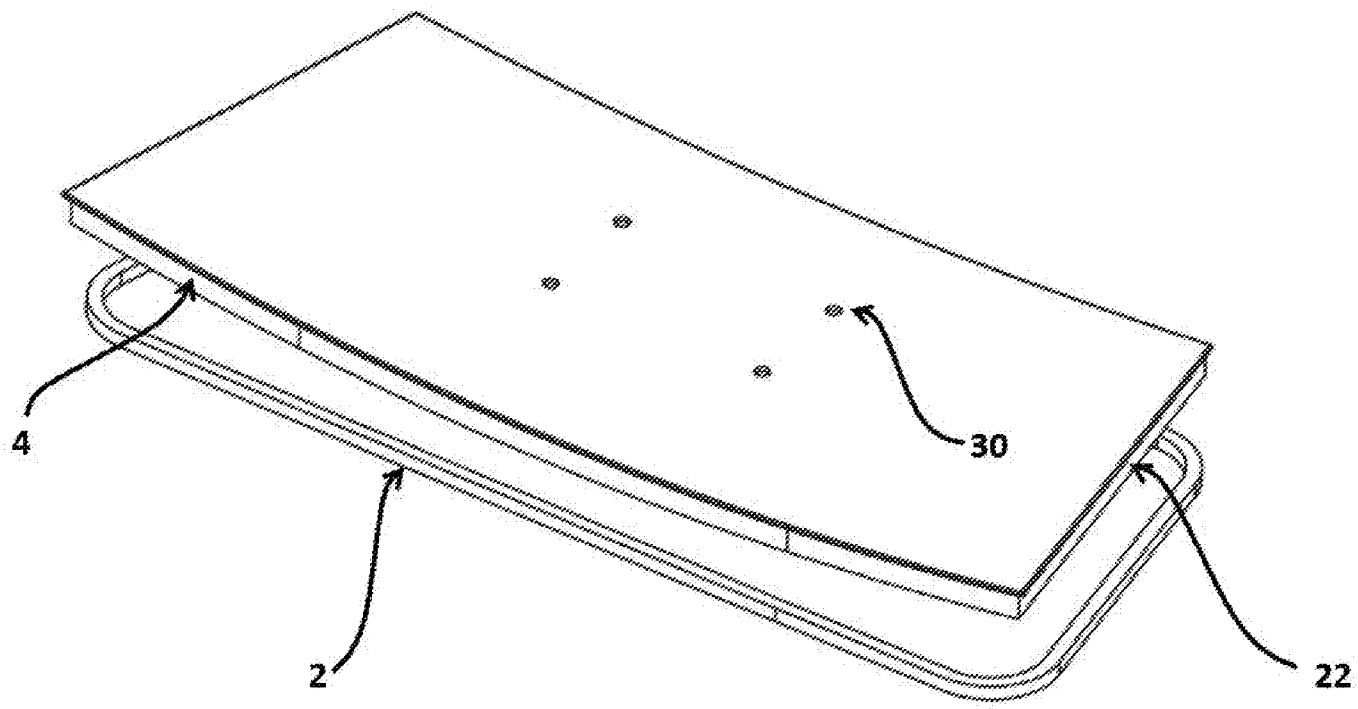

Fig. 10

Doc Code: **TR.PROV**
Document Description: Provisional Cover Sheet (SB16)

PTO/SB/16 (11-08)
Approved for use through 05/31/2015. OMB 0651-0032
U.S. Patent and Trademark Office: U.S. DEPARTMENT OF COMMERCE
Under the Paperwork Reduction Act of 1995, no persons are required to respond to a collection of information unless it displays a valid OMB control number

Provisional Application for Patent Cover Sheet

This is a request for filing a PROVISIONAL APPLICATION FOR PATENT under 37 CFR 1.53(c)

Inventor(s)

Inventor 1 — Remove

Given Name	Middle Name	Family Name	City	State	Country ¡
Jean-Marie		Le Ny	Lima		PE

Inventor 2 — Remove

Given Name	Middle Name	Family Name	City	State	Country ¡
Jairton		Pozzebon	Sao Jose dos Pi		BR

Inventor 3 — Remove

Given Name	Middle Name	Family Name	City	State	Country ¡
Juan	Pablo	Suarez	Lima		PE

Inventor 4 — Remove

Given Name	Middle Name	Family Name	City	State	Country ¡
Mario	Arturo	Mannheim Astete	Lima		PE

All Inventors Must Be Listed – Additional Inventor Information blocks may be generated within this form by selecting the **Add** button. — Add

Title of Invention	METHOD AND APPARATUS FOR BENDING THIN GLASS
Attorney Docket Number (if applicable)	1511.20200

Correspondence Address

Direct all correspondence to (select one):

◉ The address corresponding to Customer Number	◯ Firm or Individual Name
Customer Number	130961

The invention was made by an agency of the United States Government or under a contract with an agency of the United States Government.

- ● No.
- Yes, the invention was made by an agency of the United States Government. The U.S. Government agency name is:
- Yes, the invention was under a contract with an agency of the United States Government. The name of the U.S. Government agency and Government contract number are:

Doc Code: **TR.PROV**
Document Description: Provisional Cover Sheet (SB16)

PTO/SB/16 (11-08)
Approved for use through 05/31/2015. OMB 0651-0032
U.S. Patent and Trademark Office: U.S. DEPARTMENT OF COMMERCE
Under the Paperwork Reduction Act of 1995, no persons are required to respond to a collection of information unless it displays a valid OMB control number

Doc Code: **TR.PROV**
Document Description: Provisional Cover Sheet (SB16)

PTO/SB/16 (11-08)
Approved for use through 05/31/2015. OMB 0651-0032
U.S. Patent and Trademark Office: U.S. DEPARTMENT OF COMMERCE
Under the Paperwork Reduction Act of 1995, no persons are required to respond to a collection of information unless it displays a valid OMB control number

Entity Status
Applicant asserts small entity status under 37 CFR 1.27 or applicant certifies micro entity status under 37 CFR 1.29

- ○ Applicant asserts small entity status under 37 CFR 1.27
- ○ Applicant certifies micro entity status under 37 CFR 1.29. Applicant must attach form PTO/SB/15A or B or equivalent.
- ◉ No

Warning

Petitioner/applicant is cautioned to avoid submitting personal information in documents filed in a patent application that may contribute to identity theft. Personal information such as social security numbers, bank account numbers, or credit card numbers (other than a check or credit card authorization form PTO-2038 submitted for payment purposes) is never required by the USPTO to support a petition or an application. If this type of personal information is included in documents submitted to the USPTO, petitioners/applicants should consider redacting such personal information from the documents before submitting them to USPTO. Petitioner/applicant is advised that the record of a patent application is available to the public after publication of the application (unless a non-publication request in compliance with 37 CFR 1.213(a) is made in the application) or issuance of a patent. Furthermore, the record from an abandoned application may also be available to the public if the application is referenced in a published application or an issued patent (see 37 CFR1.14). Checks and credit card authorization forms PTO-2038 submitted for payment purposes are not retained in the application file and therefore are not publicly available.

Signature

Please see 37 CFR 1.4(d) for the form of the signature.

Signature	/Joseph L. Morales/			Date (YYYY-MM-DD)	2016-12-30
First Name	Joseph	Last Name	Morales	Registration Number (If appropriate)	58835

This collection of information is required by 37 CFR 1.51. The information is required to obtain or retain a benefit by the public which is to file (and by the USPTO to process) an application. Confidentiality is governed by 35 U.S.C. 122 and 37 CFR 1.11 and 1.14. This collection is estimated to take 8 hours to complete, including gathering, preparing, and submitting the completed application form to the USPTO. Time will vary depending upon the individual case. Any comments on the amount of time you require to complete this form and/or suggestions for reducing this burden, should be sent to the Chief Information Officer, U.S. Patent and Trademark Office, U.S. Department of Commerce, P.O. Box 1450, Alexandria, VA 22313-1450. DO NOT SEND FEES OR COMPLETED FORMS TO THIS ADDRESS. **This form can only be used when in conjunction with EFS-Web. If this form is mailed to the USPTO, it may cause delays in handling the provisional application.**

Privacy Act Statement

The Privacy Act of 1974 (P.L. 93-579) requires that you be given certain information in connection with your submission of the attached form related to a patent application or paten. Accordingly, pursuant to the requirements of the Act, please be advised that : (1) the general authority for the collection of this information is 35 U.S.C. 2(b)(2); (2) furnishing of the information solicited is voluntary; and (3) the principal purpose for which the information is used by the U.S. Patent and Trademark Office is to process and/or examine your submission related to a patent application or patent. If you do not furnish the requested information, the U.S. Patent and Trademark Office may not be able to process and/or examine your submission, which may result in termination of proceedings or abandonment of the application or expiration of the patent.

The information provided by you in this form will be subject to the following routine uses:

1. The information on this form will be treated confidentially to the extent allowed under the Freedom of Information Act (5 U.S.C. 552) and the Privacy Act (5 U.S.C 552a). Records from this system of records may be disclosed to the Department of Justice to determine whether disclosure of these records is required by the Freedom of Information Act.
2. A record from this system of records may be disclosed, as a routine use, in the course of presenting evidence to a court, magistrate, or administrative tribunal, including disclosures to opposing counsel in the course of settlement negotiations.
3. A record in this system of records may be disclosed, as a routine use, to a Member of Congress submitting a request involving an individual, to whom the record pertains, when the individual has requested assistance from the Member with respect to the subject matter of the record.
4. A record in this system of records may be disclosed, as a routine use, to a contractor of the Agency having need for the information in order to perform a contract. Recipients of information shall be required to comply with the requirements of the Privacy Act of 1974, as amended, pursuant to 5 U.S.C. 552a(m).
5. A record related to an International Application filed under the Patent Cooperation Treaty in this system of records may be disclosed, as a routine use, to the International Bureau of the World Intellectual Property Organization, pursuant to the Patent Cooperation Treaty.
6. A record in this system of records may be disclosed, as a routine use, t o a n other federal agency for purposes of National Security review (35 U.S.C. 181) and for review pursuant to the Atomic Energy Act (42 U.S.C. 218(c)).
7. A record from this system of records may be disclosed, as a routine use, to the Administrator, General Services, or his/her designee, during an inspection of records conducted by GSA as part of that agency's responsibility to recommend improvements in records management practices and programs, under authority of 44 U.S.C. 2904 and 2906. Such disclosure shall be made in accordance with the GSA regulations governing inspection of records for this purpose, and any other relevant (i.e., GSA or Commerce) directive. Such disclosure shall not be used to make determinations about individuals.
8. A record from this system of records may be disclosed, as a routine use, to the public after either publication of the application pursuant to 35 U.S.C. 122(b) or issuance of a patent pursuant to 35 U.S.C. 151. Further, a record may be disclosed, subject to the limitations of 37 CFR 1.14, as a routine use, to the public if the record was filed in an application which became abandoned or in which the proceedings were terminated and which application is referenced by either a published application, an application open to public inspection or an issued patent.
9. A record from this system of records may be disclosed, as a routine use, to a Federal, State, or local law enforcement agency, if the USPTO becomes aware of a violation or potential violation of law or regulation.

PTO/AIA/14 (07-14)
Approved for use through 04/30/2017. OMB 0651-0032
U.S. Patent and Trademark Office; U.S. DEPARTMENT OF COMMERCE
Under the Paperwork Reduction Act of 1995, no persons are required to respond to a collection of information unless it contains a valid OMB control number.

Application Data Sheet 37 CFR 1.76	Attorney Docket Number	1511.20200
	Application Number	
Title of Invention	METHOD AND APPARATUS FOR BENDING THIN GLASS	

The application data sheet is part of the provisional or nonprovisional application for which it is being submitted. The following form contains the bibliographic data arranged in a format specified by the United States Patent and Trademark Office as outlined in 37 CFR 1.76.
This document may be completed electronically and submitted to the Office in electronic format using the Electronic Filing System (EFS) or the document may be printed and included in a paper filed application.

Secrecy Order 37 CFR 5.2

☐ Portions or all of the application associated with this Application Data Sheet may fall under a Secrecy Order pursuant to 37 CFR 5.2 (Paper filers only. Applications that fall under Secrecy Order may not be filed electronically.)

Inventor Information:

Inventor 1 Remove

Legal Name

Prefix	Given Name	Middle Name	Family Name	Suffix
	Jean-Marie		Le Ny	

Residence Information (Select One) US Residency ● Non US Residency Active US Military Service

City	Lima	Country of Residence i	PE

Mailing Address of Inventor:

Address 1	Alle Alameda Monte Umbroso 208		
Address 2	Dep. 402, Santiago de Surco		
City	Lima	State/Province	
Postal Code		Country i	PE

Inventor 2 Remove

Legal Name

Prefix	Given Name	Middle Name	Family Name	Suffix
	Jairton		Pozzebon	

Residence Information (Select One) US Residency ◉ Non US Residency Active US Military Service

City	Parana	Country of Residence i	BR

Mailing Address of Inventor:

Address 1	Alameda Arpo 2751		
Address 2	Barrio Costeira, Sao Jose dos Pinhais		
City	Parana	State/Province	
Postal Code		Country i	BR

Inventor 3 Remove

Legal Name

Under the Paperwork Reduction Act of 1995, no persons are required to respond to a collection of information unless it contains a valid OMB control number.

Application Data Sheet 37 CFR 1.76	Attorney Docket Number	1511.20200
	Application Number	
Title of Invention	METHOD AND APPARATUS FOR BENDING THIN GLASS	

Prefix	Given Name	Middle Name	Family Name	Suffix
	Juan	Pablo	Suarez	

Residence Information (Select One) US Residency ◉ Non US Residency Active US Military Service

City	Lima	Country of Residence i	PE

Mailing Address of Inventor:

Address 1	Calle Madrid 380		
Address 2	Dep. 1101, Miraflores		
City	Lima	**State/Province**	
Postal Code		**Country** i	PE

Inventor 4 Remove

Legal Name

Prefix	Given Name	Middle Name	Family Name	Suffix
	Mario	Arturo	Mannheim Astete	

Residence Information (Select One) US Residency ◉ Non US Residency Active US Military Service

City	Lima	Country of Residence i	PE

Mailing Address of Inventor:

Address 1	Av. Guillermo Dansey 1846		
Address 2	Cercado de Lima		
City	Lima	**State/Province**	
Postal Code		**Country** i	PE

All Inventors Must Be Listed - Additional Inventor Information blocks may be generated within this form by selecting the **Add** button. Add

Correspondence Information:

Enter either Customer Number or complete the Correspondence Information section below.
For further information see 37 CFR 1.33(a).

☐ **An Address is being provided for the correspondence Information of this application.**

Customer Number	130961		
Email Address	jmorales@moralesq.com	Add Email	Remove Email

PTO/AIA/14 (07-14)
Approved for use through 04/30/2017. OMB 0651-0032
U.S. Patent and Trademark Office; U.S. DEPARTMENT OF COMMERCE
Under the Paperwork Reduction Act of 1995, no persons are required to respond to a collection of information unless it contains a valid OMB control number.

Application Data Sheet 37 CFR 1.76	Attorney Docket Number	1511.20200
	Application Number	
Title of Invention	METHOD AND APPARATUS FOR BENDING THIN GLASS	

Application Information:

Title of the Invention	METHOD AND APPARATUS FOR BENDING THIN GLASS		
Attorney Docket Number	1511.20200	**Small Entity Status Claimed**	☐
Application Type	Provisional		
Subject Matter	Utility		
Total Number of Drawing Sheets (if any)		**Suggested Figure for Publication (if any)**	

Filing By Reference :

Only complete this section when filing an application by reference under 35 U.S.C. 111(c) and 37 CFR 1.57(a). Do not complete this section if application papers including a specification and any drawings are being filed. Any domestic benefit or foreign priority information must be provided in the appropriate section(s) below (i.e., "Domestic Benefit/National Stage Information" and "Foreign Priority Information").

For the purposes of a filing date under 37 CFR 1.53(b), the description and any drawings of the present application are replaced by this reference to the previously filed application, subject to conditions and requirements of 37 CFR 1.57(a).

Application number of the previously filed application	Filing date (YYYY-MM-DD)	Intellectual Property Authority or Country

Publication Information:

☐ Request Early Publication (Fee required at time of Request 37 CFR 1.219)

☐ **Request Not to Publish.** I hereby request that the attached application not be published under 35 U.S.C. 122(b) and certify that the invention disclosed in the attached application **has not and will not** be the subject of an application filed in another country, or under a multilateral international agreement, that requires publication at eighteen months after filing.

Representative Information:

Representative information should be provided for all practitioners having a power of attorney in the application. Providing this information in the Application Data Sheet does not constitute a power of attorney in the application (see 37 CFR 1.32).
Either enter Customer Number or complete the Representative Name section below. If both sections are completed the customer Number will be used for the Representative Information during processing.

Please Select One:	● Customer Number	US Patent Practitioner	○ Limited Recognition (37 CFR 11.9)
Customer Number	130961		

Under the Paperwork Reduction Act of 1995, no persons are required to respond to a collection of information unless it contains a valid OMB control number.

Application Data Sheet 37 CFR 1.76	Attorney Docket Number	1511.20200
	Application Number	
Title of Invention	METHOD AND APPARATUS FOR BENDING THIN GLASS	

Domestic Benefit/National Stage Information:

This section allows for the applicant to either claim benefit under 35 U.S.C. 119(e), 120, 121, 365(c), or 386(c) or indicate National Stage entry from a PCT application. Providing this information in the application data sheet constitutes the specific reference required by 35 U.S.C. 119(e) or 120, and 37 CFR 1.78.
When referring to the current application, please leave the application number blank.

Prior Application Status			Remove
Application Number	Continuity Type	Prior Application Number	Filing Date (YYYY-MM-DD)

Additional Domestic Benefit/National Stage Data may be generated within this form by selecting the **Add** button. Add

Foreign Priority Information:

This section allows for the applicant to claim priority to a foreign application. Providing this information in the application data sheet constitutes the claim for priority as required by 35 U.S.C. 119(b) and 37 CFR 1.55. When priority is claimed to a foreign application that is eligible for retrieval under the priority document exchange program (PDX)[i] the information will be used by the Office to automatically attempt retrieval pursuant to 37 CFR 1.55(i)(1) and (2). Under the PDX program, applicant bears the ultimate responsibility for ensuring that a copy of the foreign application is received by the Office from the participating foreign intellectual property office, or a certified copy of the foreign priority application is filed, within the time period specified in 37 CFR 1.55(g)(1).

Remove

Application Number	Country[i]	Filing Date (YYYY-MM-DD)	Access Code[i] (if applicable)

Additional Foreign Priority Data may be generated within this form by selecting the **Add** button. Add

Statement under 37 CFR 1.55 or 1.78 for AIA (First Inventor to File) Transition Applications

☐ This application (1) claims priority to or the benefit of an application filed before March 16, 2013 and (2) also contains, or contained at any time, a claim to a claimed invention that has an effective filing date on or after March 16, 2013.
NOTE: By providing this statement under 37 CFR 1.55 or 1.78, this application, with a filing date on or after March 16, 2013, will be examined under the first inventor to file provisions of the AIA.

Under the Paperwork Reduction Act of 1995, no persons are required to respond to a collection of information unless it contains a valid OMB control number.

Application Data Sheet 37 CFR 1.76	Attorney Docket Number	1511.20200
	Application Number	
Title of Invention	METHOD AND APPARATUS FOR BENDING THIN GLASS	

Authorization to Permit Access:

☒ Authorization to Permit Access to the Instant Application by the Participating Offices

If checked, the undersigned hereby grants the USPTO authority to provide the European Patent Office (EPO), the Japan Patent Office (JPO), the Korean Intellectual Property Office (KIPO), the World Intellectual Property Office (WIPO), and any other intellectual property offices in which a foreign application claiming priority to the instant patent application is filed access to the instant patent application. See 37 CFR 1.14(c) and (h). This box should not be checked if the applicant does not wish the EPO, JPO, KIPO, WIPO, or other intellectual property office in which a foreign application claiming priority to the instant patent application is filed to have access to the instant patent application.

In accordance with 37 CFR 1.14(h)(3), access will be provided to a copy of the instant patent application with respect to: 1) the instant patent application-as-filed; 2) any foreign application to which the instant patent application claims priority under 35 U.S.C. 119(a)-(d) if a copy of the foreign application that satisfies the certified copy requirement of 37 CFR 1.55 has been filed in the instant patent application; and 3) any U.S. application-as-filed from which benefit is sought in the instant patent application.

In accordance with 37 CFR 1.14(c), access may be provided to information concerning the date o f filing this Authorization.

Applicant Information:

Providing assignment information in this section does not substitute for compliance with any requirement of part 3 of Title 37 of CFR to have an assignment recorded by the Office.

Applicant 1 Remove

If the applicant is the inventor (or the remaining joint inventor or inventors under 37 CFR 1.45), this section should not be completed. The information to be provided in this section is the name and address of the legal representative who is the applicant under 37 CFR 1.43; or the name and address of the assignee, person to whom the inventor is under an obligation to assign the invention, or person who otherwise shows sufficient proprietary interest in the matter who is the applicant under 37 CFR 1.46. If the applicant is an applicant under 37 CFR 1.46 (assignee, person to whom the inventor is obligated to assign, or person who otherwise shows sufficient proprietary interest) together with one or more joint inventors, then the joint inventor or inventors who are also the applicant should be identified in this section.

Clear

● Assignee	Legal Representative under 35 U.S.C. 117	Joint Inventor
Person to whom the inventor is obligated to assign.	Person who shows sufficient proprietary interest	

If applicant is the legal representative, indicate the authority to file the patent application, the inventor is:

Name of the Deceased or Legally Incapacitated Inventor :

If the Applicant is an Organization check here. ☒

Organization Name	AGP América S.A.

Under the Paperwork Reduction Act of 1995, no persons are required to respond to a collection of information unless it contains a valid OMB control number.

Application Data Sheet 37 CFR 1.76	Attorney Docket Number	1511.20200
	Application Number	
Title of Invention	METHOD AND APPARATUS FOR BENDING THIN GLASS	

Mailing Address Information For Applicant:			
Address 1	Calle 15 # 35-39		
Address 2			
City	Bogota	**State/Province**	
Country i	CO	Postal Code	
Phone Number		Fax Number	
Email Address			

Additional Applicant Data may be generated within this form by selecting the Add button. Add

Assignee Information including Non-Applicant Assignee Information:

Providing assignment information in this section does not subsitute for compliance with any requirement of part 3 of Title 37 of CFR to have an assignment recorded by the Office.

Assignee 1

Complete this section if assignee information, including non-applicant assignee information, is desired to be included on the patent application publication . An assignee-applicant identified in the "Applicant Information" section will appear on the patent application publication as an applicant. For an assignee-applicant, complete this section only if identification as an assignee is also desired on the patent application publication.

Remove

If the Assignee or Non-Applicant Assignee is an Organization check here. ☐

Prefix	**Given Name**	Middle Name	**Family Name**	Suffix

Mailing Address Information For Assignee including Non-Applicant Assignee:			
Address 1			
Address 2			
City		**State/Province**	
Country i		Postal Code	
Phone Number		Fax Number	
Email Address			

Additional Assignee or Non-Applicant Assignee Data may be generated within this form by selecting the Add button. Add

Under the Paperwork Reduction Act of 1995, no persons are required to respond to a collection of information unless it contains a valid OMB control number.

Application Data Sheet 37 CFR 1.76	Attorney Docket Number	1511.20200
	Application Number	
Title of Invention	METHOD AND APPARATUS FOR BENDING THIN GLASS	

Signature:

Remove

NOTE: This form must be signed in accordance with 37 CFR 1.33. See 37 CFR 1.4 for signature requirements and certifications.

Signature	/Joseph L. Morales/			Date (YYYY-MM-DD)	2016-12-30
First Name	Joseph	Last Name	Morales	Registration Number	58835

Additional Signature may be generated within this form by selecting the Add button. Add

This collection of information is required by 37 CFR 1.76. The information is required to obtain or retain a benefit by the public which is to file (and by the USPTO to process) an application. Confidentiality is governed by 35 U.S.C. 122 and 37 CFR 1.14. This collection is estimated to take 23 minutes to complete, including gathering, preparing, and submitting the completed application data sheet form to the USPTO. Time will vary depending upon the individual case. Any comments on the amount of time you require to complete this form and/or suggestions for reducing this burden, should be sent to the Chief Information Officer, U.S. Patent and Trademark Office, U.S. Department of Commerce, P.O. Box 1450, Alexandria, VA 22313-1450. DO NOT SEND FEES OR COMPLETED FORMS TO THIS ADDRESS. **SEND TO: Commissioner for Patents, P.O. Box 1450, Alexandria, VA 22313-1450.**

Privacy Act Statement

The Privacy Act of 1974 (P.L. 93-579) requires that you be given certain information in connection with your submission of the attached form related to a patent application or patent. Accordingly, pursuant to the requirements of the Act, please be advised that: (1) the general authority for the collection of this information is 35 U.S.C. 2(b)(2); (2) furnishing of the information solicited is voluntary; and (3) the principal purpose for which the information is used by the U.S. Patent and Trademark Office is to process and/or examine your submission related to a patent application or patent. If you do not furnish the requested information, the U.S. Patent and Trademark Office may not be able to process and/or examine your submission, which may result in termination of proceedings or abandonment of the application or expiration of the patent.

The information provided by you in this form will be subject to the following routine uses:

1. The information on this form will be treated confidentially to the extent allowed under the Freedom of Information Act (5 U.S.C. 552) and the Privacy Act (5 U.S.C. 552a). Records from this system of records may be disclosed to the Department of Justice to determine whether the Freedom of Information Act requires disclosure of these records.

2. A record from this system of records may be disclosed, as a routine use, in the course of presenting evidence to a court, magistrate, or administrative tribunal, including disclosures to opposing counsel in the course of settlement negotiations.

3. A record in this system of records may be disclosed, as a routine use, to a Member of Congress submitting a request involving an individual, to whom the record pertains, when the individual has requested assistance from the Member with respect to the subject matter of the record.

4. A record in this system of records may be disclosed, as a routine use, to a contractor of the Agency having need for the information in order to perform a contract. Recipients of information shall be required to comply with the requirements of the Privacy Act of 1974, as amended, pursuant to 5 U.S.C. 552a(m).

5. A record related to an International Application filed under the Patent Cooperation Treaty in this system of records may be disclosed, as a routine use, to the International Bureau of the World Intellectual Property Organization, pursuant to the Patent C o o p eration Treaty.

6. A record in this system of records may be disclosed, as a routine use, to another federal agency for purposes of National Security review (35 U.S.C. 181) and for review pursuant to the Atomic Energy Act (42 U.S.C. 218(c)).

7. A record from this system of records may be disclosed, as a routine use, to the Administrator, General Services, or his/her designee, during an inspection of records conducted by GSA as part of that agency's responsibility to recommend improvements in records management practices and programs, under authority of 44 U.S.C. 2904 and 2906. Such disclosure shall be made in accordance with the GSA regulations governing inspection of records for this purpose, and any other relevant (i.e., GSA or Commerce) directive. Such disclosure shall not be used to make determinations about individuals.

8. A record from this system of records may be disclosed, as a routine use, to the public after either publication of the application pursuant to 35 U.S.C. 122(b) or issuance of a patent pursuant to 35 U.S.C. 151. Further, a record may be disclosed, subject to the limitations of 37 CFR 1.14, as a routine use, to the public if the record was filed in an application which became abandoned or in which the proceedings were terminated and which application is referenced by either a published application, an application open to public inspections or an issued patent.

9. A record from this system of records may be disclosed, as a routine use, to a Federal, State, or local law enforcement agency, if the USPTO becomes aware of a violation or potential violation of law or regulation.

Electronic Acknowledgement Receipt

EFS ID:	27936204
Application Number:	62440444
International Application Number:	
Confirmation Number:	6870
Title of Invention:	METHOD AND APPARATUS FOR BENDING THIN GLASS
First Named Inventor/Applicant Name:	Jean-Marie Le Ny
Customer Number:	130961
Filer:	Joseph L. Morales
Filer Authorized By:	
Attorney Docket Number:	1511.20200
Receipt Date:	30-DEC-2016
Filing Date:	
Time Stamp:	10:01:54
Application Type:	Provisional

Payment information:

Submitted with Payment	yes
Payment Type	CARD
Payment was successfully received in RAM	$260
RAM confirmation Number	123016INTEFSW10034200
Deposit Account	
Authorized User	

The Director of the USPTO is hereby authorized to charge indicated fees and credit any overpayment as follows:

File Listing:

Document Number	Document Description	File Name	File Size(Bytes)/ Message Digest	Multi Part /.zip	Pages (if appl.)
1	Specification	11606.PDF	1501086 698ae5cf1b0b0249aa1f24c4c74a23e740c3736a	no	20
Warnings:					
Information:					
2	Provisional Cover Sheet (SB16)	11603.PDF	1477300 e6355fa75318ccb78c3d394802e926ef7f8d0c49	no	4
Warnings:					
Information:					
3	Application Data Sheet	11609.PDF	1819259 31568d181527a11601b600eb29bed88610b834f0	no	8
Warnings:					
Information:					
4	Fee Worksheet (SB06)	fee-info.pdf	29542 c36e9cf0d3f2f3ff99d9a13ad7504faf25fcb6fd	no	2
Warnings:					
Information:					
			Total Files Size (in bytes):	4827187	

This Acknowledgement Receipt evidences receipt on the noted date by the USPTO of the indicated documents, characterized by the applicant, and including page counts, where applicable. It serves as evidence of receipt similar to a Post Card, as described in MPEP 503.

New Applications Under 35 U.S.C. 111
If a new application is being filed and the application includes the necessary components for a filing date (see 37 CFR 1.53(b)-(d) and MPEP 506), a Filing Receipt (37 CFR 1.54) will be issued in due course and the date shown on this Acknowledgement Receipt will establish the filing date of the application.

National Stage of an International Application under 35 U.S.C. 371
If a timely submission to enter the national stage of an international application is compliant with the conditions of 35 U.S.C. 371 and other applicable requirements a Form PCT/DO/EO/903 indicating acceptance of the application as a national stage submission under 35 U.S.C. 371 will be issued in addition to the Filing Receipt, in due course.

New International Application Filed with the USPTO as a Receiving Office
If a new international application is being filed and the international application includes the necessary components for an international filing date (see PCT Article 11 and MPEP 1810), a Notification of the International Application Number and of the International Filing Date (Form PCT/RO/105) will be issued in due course, subject to prescriptions concerning national security, and the date shown on this Acknowledgement Receipt will establish the international filing date of the application.