1) Family number: 54590040 (US2015057948A)

© PatBase

Title: ANALYSIS OF MEASUREMENTS OF A POLYMER

Priority: US20120599573P 20120216 US20130379242 20130218 WO2013GB50381 20130218 US20140379242 20140815 US20190245306 20190111

Family:

Publication number	Publication date	Application number	Application date
AU2013220179 AA	20140904	AU20130220179	20130218
AU2013220179 BB	20181108	AU20130220179	20130218
BR112014020211 A2	20170704	BR20141120211	20130218
CA2866587 AA	20140814	CA20132866587	20130218
CN104321441 A	20150128	CN201380020403	20130218
CN104321441 B	20161019	CN201380020403	20130218
EP2814980 A1	20141224	EP20130706058	20130218
IN06795DN2014 A	20150522	IN2014DN06795	20140813
JP2015509710 T2	20150402	JP20140557122T	20130218
JP6226888 B2	20171108	JP20140557122T	20130218
KR20140125874 A	20141029	KR20147025898	20130218
US2015057948 AA	20150226	US20130379242	20130218
US2019154655 AA	20190523	US20190245306	20190111
WO13121224 A1	20130822	WO2013GB50381	20130218

Probable Assignee: OXFORD NANOPORE TECHNOLOGIES LTD

Assignee(s):(std)**:** OXFORD NANOPORE TECH LTD

Assignee(s): OXFORD NANOPORE TECHNOLOGIES LTD ; WHITE JAMES ; OXFORD NANOPORE TECHNOLOGIES LTDEDMUND CARTWRIGHT HOUSE4 ROBERT ROBINSON AVENUEOXFORD SCIENCE PARKOXFORDSHIRE OX4 4GAOXFORDGB ; REID STUART WILLIAM ; CLARKE JAMES ANTHONY ; HARPER GAVIN

Inventor(s):(std)**:** WHITE JAMES ; CLARKE JAMES ANTHONY ; REID STUART WILLIAM ; HARPER GAVIN ; REID STUART ; STUART WILLIAM REID ; JAMES ANTHONY CLARKE ; JAMES WHITE ; GAVIN HARPER

Inventor(s): WHITE JAMESGB ; HARPER GAVINGB ; REID STUART WILLIAMGB ; CLARKE JAMES ANTHONYGB

Agent(s): DAVIES COLLISON CAVE; DAVIES COLLISON CAVE PTY LTD; OSLER HOSKIN AND HARCOURT LLP; MERRYWEATHER COLIN HENRY; KOBAYASHI HIROSHI; OHMORI NORIO

Designated states: AE AG AL AM AO AT AU AZ BA BB BE BF BG BH BJ BN BR BW BY BZ CA CF CG CH CI CL CM CN CO CR CU CY CZ DE DK DM DO DZ EC EE EG ES FI FR GA GB GD GE GH GM GN GQ GR GT GW HN HR HU ID IE IL IN IS IT JP KE KG KM KN KP KR KZ LA LC LI LK LR LS LT LU LV LY MA MC MD ME MG MK ML MN MR MT MW MX MY MZ NA NE NG NI NL NO NZ OM PA PE PG PH PL PT QA RO RS RU RW SC SD SE SG SI SK SL SM SN ST SV SY SZ TD TG TH TJ TM TN TR TT TZ UA UG US UZ VC VN ZA ZM ZW

International class (IPC 8-9): B82Y15/00 C12M1/34 C12Q1/68 C12Q1/6809 C12Q1/6858 C12Q1/6869 G01N27/02 G01N27/416 G01N33/487 G01N33/68 G06F19/10 G06F19/22 (Advanced/Invention)

CPC: G01N33/48792 G01N27/02 G01N33/6803 G01N33/6875 B82Y15/00 C12Q1/6858 C12Q1/6869 G01N33/48721 G16B30/00

US class: 1/1 702/25

Classification Explorer

Cited documents: WO12005857 A1, WO11067559 A1, WO10122293 A1, WO10117470 A2, WO10086603 A1, WO10004273 A1, WO10004265 A1, WO09077734 A2, WO09035647 A1, WO08102121 A1, WO08102120 A1, WO06100484 A2, WO06028508 A2, WO06028508, WO05124888 A1, WO0079257 A1, WO0028312 A1, US6128587 A, US5795782 A, US5795782, US201161581340 P, US201161581332 P, US201161549998 P, US201161538721 P, US201161490860 P, JP2011527191 T2, JP2011527191 T2, JP2011527191, JP2010539966 T2, JP2010539966 T2, JP2010539966, JP2010524436 T2, JP2010524436 T2, JP2010524436, JP2002325581 A2, JP2002325581, JP11178575, JP11178575, GB201117574 A,

Forward Citations: WO20049293, WO19227013, WO19204720, WO19149626, WO18211241, WO18034745, WO17149318, WO17149317, WO17149316, US9984147, US9927398, US10596523, US10549274, US10416117, US10338056, US10302972, US10190158, US10131943, JP6457811, JP2019066484, JP2014531901, EP3206794,

Abstract:
A time-ordered series of measurements of a polymer made during translocation of the polymer through a nanopore are analysed. The measurements are dependent on the identity of k-mers in the nanopore, a k-mer being k polymer units of the polymer, where k is a positive integer. The method involves deriving, from the series of measurements, a feature vector of time-ordered features representing characteristics of the measurements; and determining similarity between the derived feature vector and at least one other feature vector.

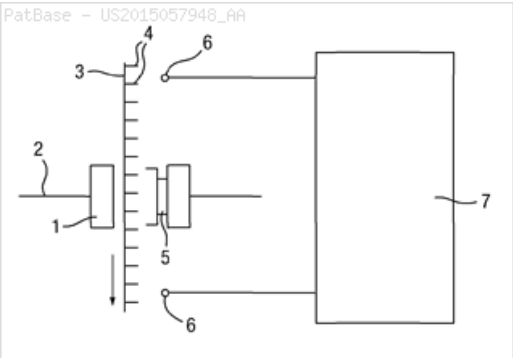

2) Family number: 12540122 (US5368712A) © PatBase

Title: BIOLOGICALLY MIMETIC SYNTHETIC ION CHANNEL TRANSDUCERS

Priority: US19890430814 19891102 US19900576222 19900831 US19940312821 19940927

Family:

Publication number	Publication date	Application number	Application date
US5368712 A	19941129	US19900576222	19900831
US5516890 A	19960514	US19940312821	19940927

Probable Assignee: KKJ INC

Assignee(s):(std)**:** SYNPORIN TECH ; SYNPORIN TECHNOLOGIES INC

Assignee(s): SYNPORIN TECHNOLOGIES ; J INC KK ; KKJ INC

Inventor(s):(std)**:** TOMICH JOHN ; MONTAL MAURICIO

International class (IPC 8-9): C07K14/00 C07K14/705 C12Q1/00 G01N33/543 (Advanced/Invention)

International class (IPC 1-7): A61K38/04 C07K5/00 C07K7/00 G01N27/327

CPC: Y10S435/817 Y10S436/806 G01N33/5438 C07K14/001 C07K14/705 C12Q1/002

European class: C07K14/00B C07K14/705 C12Q1/00B2 G01N33/543K2B M07K203/00

US class: 204/153.12 204/403 204/403.06 204/403.08 435/4 435/817 436/151 436/501 436/806 530/326 530/327 530/328 530/329 530/330 530/331

Classification Explorer

Cited documents: USH201 H1, US4923919 A, US4859538 A, US4849343 A, US4830962 A, US4824529 A, US4776944 A, US4677099 A, US4661235 A, US4637861 A, US4618598 A, US4474773 A, US4055433 A,

Forward Citations: WO9947923, WO9947923, WO9823948, WO9741425, WO9741424, WO9729366, WO9726905, WO9725616, WO9636871, WO12042226, WO11123525, WO11067559, WO08094204, WO08094204, WO07084103, WO04079337, WO04079337, WO0159453, WO0159453, US9176127, US8906609, US8883967, US8759017, US8748105, US8742070, US8477313, US8449825, US8404449, US8325346, US8294007, US8283126, US8242077, US8163870, US8148172, US8107082, US8094315, US8004669, US7972993, US7889347, US7888046, US7858030, US7846389, US7829661, US7745856, US7745570, US7622934, US7569850, US7544978, US7432371, US7405052, US7169272, US7129208, US6936462, US6916665, US6824659, US6787368, US6750200, US6699719, US6641997, US6503452, US6478939, US6461490, US6451196, US6348319, US6258254, US6228326, US6214206, US6130037, US6077826, US5955379, US5858713, US5849869, US5736342, US5674977, US2011159599, US2011111985, US2011048939, US2010065822, US2009283422, US2009105449, US2009075394, US2008139407, US2008138839, US2008103064, US2008094076, US2007298494, US2007255249, US2006251709, US2006204428, US2006169975, US2006073518, US2005221282, US2005208574, US2005191616, US2004260085, US2004243093, US2004175761, US2004106741, US2004096895, US2003228605, US2003215881, US2003199688, US2003176641, US2003015422, US2002094526, US10576456, US10006902, EP2622343, EP2507387, EP1005644, EP0895592, CN103630571, CN103630571, AU706362,

Abstract:
The invention relates to synthetic proteins that can be used in in vitro sensing devices to detect the presence of physiologically active substances. The synthetic proteins are mimetic to native ion channels in mammalian systems. The invention also relates to a biosensor comprising a support assembly, a synthetic lipid bilayer containing the active channel protein. Lastly, the invention relates to the use of the biosensor disclosed in the application for the in vitro detection of physiologically active substances including antiseptics, antibiotics, neurotransmittors, and others.

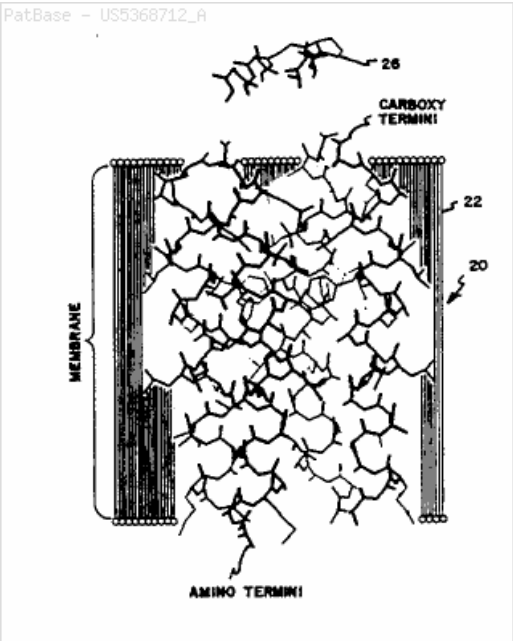

3) Family number: 30103266 (US2002006613A) © PatBase

Title: METHODS AND COMPOSITIONS FOR THE IDENTIFICATION AND ASSESSMENT OF CANCER THERAPIES

Priority: US19970037921P 19970212 US19970037921P 19970212 US19970064687P 19971105

US19980071940P 19980120 WO1998US03024 19980211 US19980079399P 19980326
US19980134411 19980813 US19980096666P 19980813 US19980096662P 19980813
US19980105968P 19981028 US19990233611P 19990119 US19990322864 19990528
US19990374415 19990813 US19990374554 19990813 US20010852968 20010510
US20010928668 20010813 US20110985905 20110106 US20120432959 20120328
US20130034407 20130923

Family:

Publication number	Publication date	Application number	Application date
AT273381 E	20040815	AT19980906490T	19980211
AU199861703 A1	19980826	AU19980061703	19980211
AU762888 B2	20030710	AU19980061703	19980211
CA2281205 AA	19990811	CA19982281205	19980211
CN1251609 A	20000426	CN19988003852	19980211
DE69825601 D1	20040916	DE19986025601	19980211
DE69825601 T2	20050428	DE19986025601T	19980211
EP1009802 A2	20000621	EP19980906490	19980211
EP1009802 B1	20040811	EP19980906490	19980211
IL131332 A0	20010128	IL19980131332	19980211
IL131332 A1	20030731	IL19980131332	19980211
IL156002 A0	20031214	IL19980156002	19980211
JP2001514739 T2	20010911	JP19980535104T	19980211
JP3935509 B2	20070627	JP19980535104T	19980211
US2002006613 AA	20020117	US19990374554	19990813
US2002110818 AA	20020815	US20010928668	20010813
US2002119455 AA	20020829	US20010852968	20010510
US2011210272 AA	20110901	US20110985905	20110106
US2012217161 AA	20120830	US20120432959	20120328
US2014199209 AA	20140717	US20130034407	20130923
US6355420 BA	20020312	US19980134411	19980813
US6403311 BA	20020611	US19990374415	19990813
US8168380 BB	20120501	US20010852968	20010510
US9745625 BB	20170829	US20130034407	20130923
WO9835012 A2	19980813	WO1998US03024	19980211
WO9835012 A3	19990211	WO1998US03024	19980211

Probable Assignee: U S GENOMICS INC

Assignee(s):(std): CHAN EUGENE Y ; EUGENE Y CHAN ; LIFE TECH CORP ; LIFE TECHNOLOGIES CORP ; US GENOMICS INC ; US GENOMICS

Assignee(s): VAN HUFFEL CHRISTOPHE ; U S GENOMICS INC ; C2 BIOTECHNOLOGIES INC ; MILLENNIUM PHARMACEUTICAL INC ; SHYJAN ANDREW W ; SILICON VALLEY BANK

Inventor(s):(std): CHAN EUGENE Y ; SHYJAN ANDREW W ; VAN HUFFEL CHRISTOPHE ; EUGENE Y CHAN

Agent(s): PIZZEYS; PIZZEYS PATENT AND TRADE MARK ATTORNEYS PTY LTD; SMART AND BIGGAR; SELIGSOHN GABRIELI AND CO

Designated states: AL AM AT AU AZ BA BB BE BF BG BJ BR BY CA CF CG CH CI CM CN CU CZ DE DK EE ES FI FR GA GB GE GH GM GN GR GW HU ID IE IL IS IT JP KE KG KP KR KZ LC LI LK LR LS LT LU LV MC MD MG MK ML MN MR MW MX NE NL NO NZ PL PT RO RU SD SE SG SI SK SL SN SZ TD TG TJ TM TR TT UA UG US UZ VN YU ZW

International class (IPC 8-9): B01L3/00 C07H21/04 C12M1/34 C12N15/09 C12Q1/68 G01N21/03 G01N21/05 G01N21/64 G01N21/78 G01N27/447 G01N33/487 G01N33/50 G01N33/53 (Advanced/Invention);
B01L3/00 C12N15/09 G01N21/03 G01N33/50 (Advanced/Non-invention);
C12Q1/68 (Core/Invention);
B01L3/00 (Core/Non-invention)

International class (IPC 1-7): C07H21/02 C07H21/04 C12M1/34 C12N15/09 C12Q1/68 G01N21/78 G01N33/50 G01N33/53

CPC: C12Q2600/106 C12Q2600/136 C12Q1/6886 Y10T436/143333 C12Q1/6869 B01J2219/00707 B01L3/5027 C12Q1/6809 G01N21/05 G01N21/6428 G01N33/48721 G01N2021/0346 G01N2021/6432 G01N2021/6439 G01N2021/6441 G01N2021/6482 Y10S435/97 Y10S435/973 C12Q2565/631

European class: C12Q1/68A6 C12Q1/68E C12Q1/68M6B G01N21/05 G01N21/64H G01N21/64P G01N21/64R G01N33/487B5 L01J219/00C6P4 L01L3/5027 S01N21/03K S01N21/64H4 S01N21/64H7 S01N21/64H7A S01N21/64P10

US class: 204/182.8 204/451 250/459.1 250/459.100P 422/82.08 435/149 435/287.1 435/287.2 435/375 435/5 435/6 435/6.1 435/6.12 435/6.120P 435/6.16 435/6.160P 435/6P 435/7.1 435/7.100S 435/71 435/94 435/970 435/973 436/94 536/23.1 536/23.100S 536/24.3 536/24.300S 546/33 548/416 549/382 935/77 935/78

Classification Explorer

Cited documents: WOUS80302, WO9957321, WO9955857, WO9942611, WO9924583 A1, WO9919341, WO9915517, WO9910366, WO9905315 A2, WO9844152, WO9840496, WO9835012 A2, WO9831834, WO9830486 A1, WO9828440, WO9827440, WO9822615, WO9813523, WO9813520, WO9810097 A2, WO9739150, WO9739064, WO9707245, WO9700987, WO9636737, WO9630508 A1, WO9629593 A1, WO9627025, WO9506138, WO9323564, WO9321340, WO9113075, WO9106678, WO9104507, WO9101087, WO9013666, WO9011369, WO9007576, WO8909283, WO06055521, WO0125480, WO0060114 A2, WO0060072 A1, WO0009757 A1, WO0006587 A1, WO0004364, US7790391 BB, US7767805 BB, US7767400 BB, US7678894 BB, US7666593 BB, US7645596 BB, US7635562 BB, US7593109 BB, US7501245 BB, US7491498 BB, US7482120 BB, US7462449 BB, US7329496 BB, US7297518 BB, US7282337 BA, US7279563 BB, US7279337 BB, US7276720 BB, US7270951 BA, US7179906 BB, US7169560 BB, US7105300 BB, US7037687 BB, US7008766 BA, US6982146 BA, US6927065 BB, US6911345 BB, US6908736 BA, US6818395 BA, US6790671 BA, US6780591 BB, US6772070 BB, US6762059 BB, US6696022 BA, US6639088 BB, US6593148 BA, US6524829 BA, US6485944 BA, US6458758 BA, US6448065 BB, US6423551 BA, US6403707 BB, US6403311 BA, US6399334 BA, US6362002 BA, US6355420 BA, US6322901 BA, US6309836 BA, US6294136 BA, US6291164 BA, US6263286 BA, US6258568 BA, US6255475 BA, US6255083 BA, US6245506 BA, US6232075 BA, US6221392 BA, US6210896 BA, US6210891 BA, US6207421 BA, US6207229 BA, US6200748 BA, US6162931 A, US6143496 A, US6143151 A, US6141096 A, US6136543 A, US6130101 A, US6087095 A, US6086737 A, US6083695 A, US6054316 A, US6051719 A, US6048690 A, US6027890 A, US6027709 A, US6020481 A, US6015714 A, US6008379 A, US6004744 A, US6004446 A, US5976802 A, US5972603 A, US5961923 A, US5945312 A, US5932442 A, US5928869 A, US5922591 A, US5906723 A, US5888792 A, US5869255 A, US5866336 A, US5863727 A, US5858671 A, US5846727 A, US5843767 A, US5840701 A, US5833601 A, US5831070 A, US5830659 A, US5824781 A, US5817632 A, US5814524 A, US5807831 A, US5804561 A, US5800996 A, US5800995 A, US5795782 A, US5789167 A, US5776677 A, US5776674 A,

US5755943 A, US5741893 A, US5725839 A, US5723332 A, US5723298 A, US5720928 A, US5707804 A, US5707797 A, US5706805 A, US5703222 A, US5695934 A, US5688648 A, US5677196 A, US5674743 A, US5661028 A, US5654419 A, US5646264 A, US5639874 A, US5635728 A, US5631134 A, US5620854 A, US5605662 A, US5601982 A, US5599695 A, US5599675 A, US5578443 A, US5576204 A, US5571388 A, US5564959 A, US5558991 A, US5547839 A, US5547835 A, US5538898 A, US5538848 A, US5534125 A, US5528046 A, US5512462 A, US5510270 A, US5498523 A, US5494030 A, US5492806 A, US5473060 A, US5470710 A, US5470707 A, US5462467 A, US5459325 A, US5449917 A, US5442045 A, US5436130 A, US5424841 A, US5405776 A, US5405747 A, US5403708 A, US5403707 A, US5366603 A, US5362653 A, US5360523 A, US5356776 A, US5324401 A, US5302509 A, US5274240 A, US5270214 A, US5241060 A, US5230781 A, US5200313 A, US5198543 A, US5188934 A, US5171534 A, US5151507 A, US5143854 A, US5119463 A, US5091652 A, US5091310 A, US5079352 A, US5079169 A, US5047519 A, US5001050 A, US4997928 A, US4994373 A, US4979824 A, US4971903 A, US4965188 A, US4962037 A, US4962020 A, US4956219 A, US4800159 A, US4793705 A, US4764460 A, US4757141 A, US4739044 A, US4711955 A, US4683202 A, US4683195 A, US4654267 A, US4424054 A, US4351760 A, US4332332 A, US3996345 A, US3852134 A, US3802972 A, US3713921 A, US3662178 A, US3303085 A, US2010203524 AA, US2010173363 AA, US2010143932 AA, US2009253141 AA, US2009075252 AA, US2009053705 AA, US2008261833 AA, US2008233575 AA, US2008213770 AA, US2008096216 AA, US2008032307 AA, US2007111350 AA, US2007099212 AA, US2006263790 AA, US2006078915 AA, US2006046258 AA, US2006024711 AA, US2006019267 AA, US2005260609 AA, US2005239085 AA, US2005221408 AA, US2005196790 AA, US2005153354 AA, US2005147992 AA, US2005142595 AA, US2005123974 AA, US2005123944 AA, US2005112671 AA, US2005112620 AA, US2005112606 AA, US2005112595 AA, US2005042665 AA, US2005042649 AA, US2004235014 AA, US2004214211 AA, US2004166025 AA, US2004053399 AA, US2004009612 AA, US2003235854 AA, US2003215864 AA, US2003138809 AA, US2003059822 AA, US2002197639 AA, US2002187508 AA, US2002150938 AA, US2002119455 AA, US2002110818 AA, PCTUS9803024, PCTUS980302, EP1141409 B2, EP1105529, EP0834576 A3, EP0745686, EP0665293, EP0640146, EP0272007, EP0258017, EP0141409 A1, EP0109147,

Forward Citations: WO19219759, WO18148309, WO16100596, WO16057829, WO14195032, WO14190322, WO14188042, WO13186418, WO13088098, WO13088098, WO13085572, WO13085572, WO13079215, WO13010906, WO12042226, WO11135459, WO11067559, WO11034895, WO11003989, WO10108638, WO09100442, WO09022152, WO08124693, WO08121828, WO07114947, WO07011622, WO07011622, WO06116721, WO06012571, WO05085849, WO05085849, WO05052591, WO05020794, WO05020794, WO04101825, WO04066185, WO04007692, WO04007692, WO03106620, WO03106620, WO02099398, WO02074997, WO0120039, WO0120039, WO0009757, USRE41616, US9984198, US9983135, US9977031, US9970055, US9957561, US9945779, US9926521, US9921157, US9920361, US9914966, US9910956, US9903820, US9885657, US9885079, US9868978, US9863880, US9862997, US9852824, US9845501, US9845500, US9845238, US9841422, US9835587, US9823194, US9797863, US9791409, US9784679, US9766248, US9759658, US9758824, US9745625, US9738929, US9733185, US9725764, US9719999, US9719980, US9714443, US9714420, US9709503, US9702003, US9696258, US9678038, US9678012, US9677109, US9657344, US9657327, US9651539, US9650668, US9644237, US9643178, US9624537, US9617594, US9606058, US9600626, US9588051, US9587273, US9582640, US9580752, US9579650, US9540689, US9536041, US9533879, US9506105, US9494598, US9458500, US9453289, US9434989, US9434981, US9434937, US9416401, US9410923, US9389217, US9367663, US9361561, US9340781, US9310376, US9303290, US9290855, US9283563, US9279153, US9243284, US9239284, US9228976, US9217178, US9212393, US9182405, US9181578, US9176137, US9139826, US9127307, US9126165, US9096898, US9068991, US9063131, US9063081, US9061901, US9051609, US9046483, US9040305, US9028776, US9012144, US9002093, US8999636, US8986528, US8980584, US8974651, US8969091, US8956815, US8940882, US8936764, US8926813, US8917392, US8916350, US8895255, US8882980, US8871446, US8859201, US8852864, US8828211, US8822183, US8802838, US8790876, US8771491, US8722327, US8715933, US8709725, US8688388, US8685711, US8685708, US8673645, US8673556, US8658418, US8652828, US8648179, US8634075, US8586316, US8574892, US8568979, US8563275, US8557861, US8557567, US8551698, US8535895, US8530154, US8518705, US8486640, US8486636, US8470873, US8462339, US8460887, US8455260, US8455258, US8450069, US8426135, US8423294, US8420017, US8404463, US8394640, US8383342, US8361716, US8343728, US8343333, US8333934, US8314216, US8278055, US8278047, US8273574, US8268566, US8264684, US8262879, US8246799, US8232582, US8192961, US8168380, US8163492, US8158359, US8143388, US8093063, US8071319, US8048623, US8043652, US8021831, US8003375, US7981604, US7977108, US7977048, US7972858, US7960105, US7947454, US7943307, US7943305, US7939264, US7932037, US7914983, US7914734, US7906284, US7897345, US7888011, US7887753, US7887691, US7846738, US7838250, US7838239, US7833708, US7831109, US7829275, US7820427, US7815868, US7790382, US7771939, US7744816, US7741023, US7700275, US7691614, US7687239, US7670770, US7668697, US7666593, US7655443, US7645596, US7635562, US7625706, US7622934, US7597961, US7595160, US7592139, US7585624, US7575865, US7572640, US7524672, US7511285, US7504239, US7501279, US7501266, US7501245, US7496938, US7494817, US7491498, US7485424, US7482120, US7476734, US7476503, US7462449, US7416844, US7402422, US7397546, US7378280, US7371520, US7361466, US7361461, US7354710, US7351538, US7335762, US7335514, US7323305, US7319023, US7315019, US7313308, US7312257, US7302146, US7297518, US7282361, US7282330, US7282130, US7279337, US7279046, US7264929, US7262859, US7244559, US7238485, US7220549, US7220541, US7217562, US7214492, US7211390, US7198900, US7189577, US7189503, US7175086, US7170050, US7169615, US7169560, US7122383, US7118910, US7094364, US7076472, US7056676, US7056661, US7052847, US7045287, US7033764, US7011943, US7001669, US6960437, US6958480, US6956114, US6952651, US6936433, US6927065, US6911345, US6908736, US6902921, US6866999, US6844159, US6833257, US6828142, US6818395, US6790671, US6772070, US6762059, US6717146, US6713263, US6710341, US6696022, US6681648, US6639632, US6627067, US6621086, US6528258, US6403311, US6263286, US6210896, US2018327818, US2018237832, US2017307540, US2017038295, US2016299129, US2016273027, US2016222441, US2015368712, US2015197790, US2015126400, US2013129182, US2012301884, US2011229884, US2011229471, US2011223596, US2011223592, US2011189685, US2011183321, US2011177969, US2011172117, US2011166044, US2011151498, US2011111524, US2011111401, US2011053784, US2011009275, US2011003707, US2010331196, US2010329929, US2010310421, US2010297672, US2010294665, US2010291637, US2010279296, US2010261285, US2010255464, US2010255463, US2010243449, US2010235105, US2010227326, US2010216122, US2010196892, US2010190162, US2010184050, US2010154890, US2010144903, US2010144550, US2010136570, US2010120101, US2010120077, US2010113301, US2010112727, US2010112576, US2010112572, US2010105886, US2010096268, US2010093550, US2010093068, US2010078325, US2010056388, US2010035247, US2010032568, US2010029508, US2010021917, US2010021455, US2010015156, US2010009373, US2010000881, US2009311684, US2009298071, US2009286694, US2009280497, US2009266991, US2009264301, US2009253133, US2009234202, US2009215156, US2009215064, US2009186343, US2009170074, US2009148841, US2009142755, US2009136932, US2009111128, US2009104613, US2009099786, US2009088982, US2009087860, US2009084981, US2009082212, US2009065471, US2009053726, US2009048124, US2009029478, US2009029477, US2009029363, US2009011410, US2008309926, US2008274493, US2008261242, US2008261207, US2008254995, US2008254549, US2008248464, US2008242556, US2008241951, US2008241938, US2008241858, US2008241833, US2008233591, US2008227654, US2008220979, US2008213747, US2008206761, US2008182235, US2008171352, US2008171325, US2008158543, US2008156974, US2008147346, US2008146456, US2008145857, US2008145852, US2008138801, US2008119366, US2008108711, US2008096213, US2008094076, US2008091005, US2008085552, US2008064113, US2008050724, US2008044822, US2008044821, US2008027217, US2008021674, US2008004208, US2008003689, US2008003685, US2007292867, US2007281329, US2007281036, US2007275395, US2007250274, US2007232724, US2007231795, US2007211467, US2007207173, US2007206189, US2007196853, US2007196832, US2007190542, US2007184475, US2007172869, US2007172868, US2007172866, US2007172863, US2007172861, US2007172860, US2007172858, US2007172819, US2007166739, US2007166704,

US2007161028, US2007154888, US2007141604, US2007141599, US2007128614, US2007128610, US2007128083, US2007117104, US2007117103, US2007117102, US2007111315, US2007098236, US2007092872, US2007077629, US2007072219, US2007065847, US2007031870, US2007026447, US2007024448, US2007004033, US2007004031, US2007003953, US2006281102, US2006275810, US2006269916, US2006263790, US2006252077, US2006246460, US2006240543, US2006234243, US2006228747, US2006228744, US2006228742, US2006211024, US2006211010, US2006204978, US2006196779, US2006188900, US2006172408, US2006172328, US2006172313, US2006166245, US2006160231, US2006160209, US2006160113, US2006154399, US2006154288, US2006151324, US2006134666, US2006128026, US2006127906, US2006118754, US2006088838, US2006086309, US2006078998, US2006078909, US2006072444, US2006067952, US2006063264, US2006063160, US2006062531, US2006061755, US2006061754, US2006060766, US2006057606, US2006046258, US2006046249, US2006041898, US2006040297, US2006035228, US2006033325, US2006024678, US2006019276, US2006019263, US2006019259, US2006014192, US2006014186, US2006011862, US2006008799, US2006003458, US2006003333, US2006001831, US2005282229, US2005277710, US2005272085, US2005266494, US2005260609, US2005260574, US2005239125, US2005239085, US2005236481, US2005235425, US2005221408, US2005221373, US2005221370, US2005214849, US2005208557, US2005208515, US2005202444, US2005196790, US2005191651, US2005186619, US2005186576, US2005170423, US2005170367, US2005164255, US2005164205, US2005164199, US2005158761, US2005153354, US2005147992, US2005143919, US2005142595, US2005136408, US2005131057, US2005130173, US2005124022, US2005123980, US2005123974, US2005123944, US2005112768, US2005112647, US2005112620, US2005112606, US2005112595, US2005110978, US2005109984, US2005109983, US2005095627, US2005095599, US2005084887, US2005074774, US2005069895, US2005059030, US2005053962, US2005053961, US2005048599, US2005048498, US2005042665, US2005032076, US2005019799, US2005014175, US2005014171, US2005014134, US2005003366, US2004259135, US2004248161, US2004241679, US2004235014, US2004229349, US2004224380, US2004214211, US2004203078, US2004197845, US2004197843, US2004180377, US2004180369, US2004166514, US2004166025, US2004152100, US2004149580, US2004146641, US2004143725, US2004115838, US2004115696, US2004110205, US2004067501, US2004053399, US2004053300, US2004033515, US2004029160, US2004023229, US2004018527, US2004009612, US2003235854, US2003232346, US2003215891, US2003215864, US2003207326, US2003207289, US2003185967, US2003148344, US2003143581, US2003138829, US2003138819, US2003134309, US2003134299, US2003129609, US2003113759, US2003104428, US2003104405, US2003100102, US2003096321, US2003096268, US2003092005, US2003068629, US2003064366, US2003059822, US2003054396, US2003027201, US2003008308, US2002197639, US2002187508, US2002177144, US2002177137, US2002150905, US2002150759, US2002142326, US2002123064, US2002119455, US2002086016, US2002081744, US2002025529, US2002012930, US2002012916, US2002001803, US2001014850, US10584381, US10563255, US10557164, US10557158, US10551319, US10550429, US10538759, US10533945, US10533261, US10533221, US10509018, US10504613, US10502684, US10497462, US10497461, US10488394, US10482994, US10472382, US10457986, US10450607, US10444163, US10438691, US10438662, US10435739, US10428326, US10424394, US10407792, US10400280, US10400235, US10371634, US10344329, US10343166, US10340049, US10337061, US10329611, US10328428, US10323279, US10323268, US10316083, US10294516, US10288623, US10288566, US10288565, US10283928, US10274461, US10273541, US10273521, US10254204, US10253355, US10246742, US10240192, US10227648, US10222349, US10214774, US10208341, US10202597, US10196681, US10174363, US10174066, US10161001, US10157689, US10132758, US10131934, US10107752, US10101315, US10048208, US10023895, US10011847, US10000804, US10000803, KR101522741, KR100983450, JP6404785, JP6286183, JP5860574, JP5687683, JP5491378, JP2017037029, JP2015090458, JP2014097058, JP2012522225, JP2010522569, JP2002522780, EP3520775, EP3495822, EP3404118, EP3342879, EP3342879, EP3299478, EP3183367, EP3168618, EP3168618, EP3156799, EP3004385, EP3000890, EP3000890, EP2801624, EP2801624, EP2622343, EP2610008, EP2604344, EP2563936, EP2546358, EP2507387, EP2472258, EP2465943, EP2386858, EP2383776, EP2290102, EP2002260, EP1983330, EP1685407, EP1586068, EP1543155, EP1543155, EP1540017, EP1540017, EP1478771, EP1478771, EP1461452, EP1461452, EP1443318, EP1436424, EP1436424, EP1238275, EP1238275, EP1192453, EP1192453, DE102010012857, DE102010012857, DE10132211, CN108646332, CN102517255, CN101846688, CN101846688,

Abstract:
The present invention is directed to the identification of markers that can be used to determine whether cancer cells are sensitive or resistant to a therapeutic agent. The present invention is also directed to the identification of therapeutic targets. Nucleic acid arrays were used to determine the level of expression of approximately 6500 nucleic acid sequences (genes) found in 54 different solid tumor cancer cell lines selected from the NCI 60 cancer cell line series. After the level of expression was determined for each of the 6500 genes in each of the 54 cancer cell lines, statistical analysis was used to identify genes whose expression correlated with sensitivity or resistance to any one of 171 different anti-cancer compounds. Expression analysis was also used to identify genes associated with resistance or sensitivity to TAXOL in a number of cancer cell lines, clinical samples, and a human mammary epithelial cell primary cell line. The invention features a number of "sensitivity genes." These are genes that are expressed in most or all cell lines that are sensitive to treatment with an agent and which are not expressed (or are expressed at a rather low level) in cells that are resistant to treatment with that agent. The invention also features a number of "resistance genes." These are genes that are expressed in most or all cell lines that are resistant to treatment with an agent and which are not expressed (or are expressed at a rather low level) in cells that are sensitive to treatment with that agent.

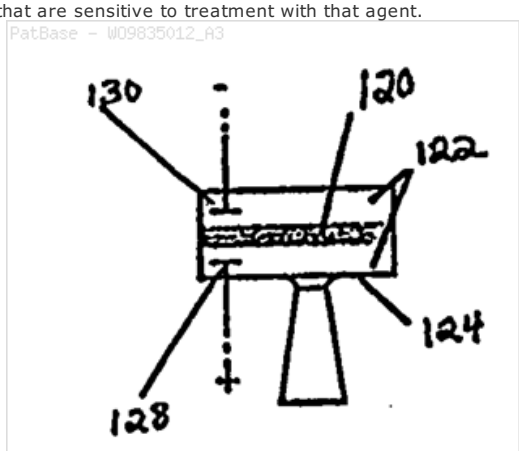

4) Family number: 69325429 (US2018117587A)

© PatBase

Title: CARTRIDGE ASSEMBLY

Priority: US20160408631P 20161014 NL20162017959 20161208 EP20170195974 20171011

US20170729729 20171011 WO2017US56032 20171011 US20190443727 20190617

Family:

Publication number	Publication date	Application number	Application date
AR109923 AA	20190206	AR2017P102835	20171011
AU2017344061 AA	20181220	AU20170344061	20171011
BR112019007566 A2	20190702	BR20191107566	20171011
CA3026729 AA	20181205	CA20173026729	20171011
CL2018003753 A1	20190412	CL20180003753	20181221
CN108351340 A	20180731	CN201780002721	20171011
CO20180013856 A2	20190118	CO20180013856	20181220
CR20190004 A	20190326	CR20190000004	20171011
DE602017002013 D1	20190228	DE201760002013T	20171011
DK3308860 T3	20190506	DK20170195974T	20171011
EP3308860 A1	20180418	EP20170195974	20171011
EP3308860 B1	20190130	EP20170195974	20171011
EP3495044 A1	20190612	EP20190154040	20171011
ES2720259 T3	20190719	ES20170195974T	20171011
HK1256420 A1	20190920	HK20180115552	20181205
HU043554 T2	20190930	HU20170195974T	20171011
ID201903794 A	20190531	ID2018P0010519	20171011
IL263922 A0	20190131	IL20170263922	20171011
IN201817045805 A	20190412	IN201817045805	20181204
JP2020500287 T2	20200109	JP20180568281T	20171011
KR20190071632 A	20190624	KR20187038170	20171011
LT3308860 T	20190510	LT20170195974T	20171011
MX2018016301 A1	20190829	MX20180016301	20171011
NL2017959 B1	20180619	NL20162017959	20161208
PE20190824 A1	20190617	PE20180003300	20171011
PH2018502653 A	20191007	PH20180502653	20181214
PH2018502653 A	20180419	PH20180502653	20181214
PL3308860 T3	20190731	PL20170195974T	20171011
PT3308860 T	20190503	PT20170195974T	20171011
SG11201811342R A1	20190130	SG20181111342	20171011
SI3308860 T1	20190628	SI20170030043T	20171011
TR201906174 T4	20190521	TR20190006174T	20171011
TW201819892 A	20180601	TW20170134737	20171011
US2018117587 AA	20180503	US20170729729	20171011
US2019299210 AA	20191003	US20190443727	20190617
US10343160 BB	20190709	US20170729729	20171011
WO18071467 A1	20180419	WO2017US56032	20171011
ZA201808105 A	20200226	ZA20180008105	20171011

Probable Assignee: ILLUMINA SINGAPORE PTE LTD

Assignee(s):(std)**:** ANG BENG KEONG ; ILLUMINA INC ; ILLUMINA SINGAPORE PTE LTD ; ILUMINA SINGAPORE PTE LTD ; LEMOINE RICHARD L ; LIN SZ CHIN STEVEN ; OSMUS JAMES MICHAEL

Assignee(s): OSMUS JAMES ; ILLUMINA INC ILLUMINA SINGAPORE PTE LTD ; ILLUMINA INC SAN DIEGO

Inventor(s):(std)**:** CHIN STEVEN LEMOINE RICHARD L ; LIN SZ ; OSMUS JAMES MICHAEL ; BENG KEONG ANG ; BENG ANG ; SZ CHIN LIN ; RICHARD LEMOINE ; BENG KEON ANG ; JAMES OSMUS ; RICHARD L LEMOINE ; SZ CHIN STEVEN LIN ; ANG BENG KEONG ; LIN SZ CHIN STEVEN ; LEMOINE RICHARD L ; ANG BENG ; LIN SZ CHIN ; OSMUS JAMES ; LEMOINE RICHARD

Inventor(s): LIN SZ CHIN SAN DIEGO ; OSMUS JAMES SAN DIEGO ; LEMOINE RICHARD SAN DIEGO ; LIN SZCHIN STEVEN

Agent(s): WRAYS PTY LTD; BERESKIN AND PARR LLP SENCRL SRL; JORGE GARAY PEREZ; MURGITROYD AND CO; ELZABURU SLP ELZABURU SLP; LIU SHEN AND ASSOCIATES; MUTIARA SUSENO LLB MH; ZEHRA YILDIRIM; ILLUMINA INC; WU BRUCE

Designated states: AE AG AL AM AO AT AU AZ BA BB BE BF BG BH BJ BN BR BW BY BZ CA CF CG CH CI CL CM CN CO CR CU CY CZ DE DJ DK DM DO DZ EC EE EG ES FI FR GA GB GD GE GH GM GN GQ GR GT GW HN HR HU ID IE IL IN IR IS IT JO JP KE KG KH KM KN KP KR KW KZ LA LC LI LK LR LS LT LU LV LY MA MC MD ME MG MK ML MN MR MT MW MX MY MZ NA NE NG NI NL NO NZ OM PA PE PG PH PL PT QA RO RS RU RW SA SC SD SE SG SI SK SL SM SN ST SV SY SZ TD TG TH TJ TM TN TR TT TZ UA UG US UZ VC VN ZA ZM ZW

International class (IPC 8-9): B01L B01L3/00 C12M C12M3/00 F04B19/00 F16K99/00 G01N G01N21/00 G01N21/01 G01N21/05 G01N21/64 G01N21/75 G01N33/48 G01N35/00 G01N35/08 G01N37/00 (Advanced/Invention); B01L3/00 F04B19/00 F16K99/00 G01N21/00 (Core/Invention); B01L (Subclass/Invention)

International class (IPC 1-7): B01L3/00 C12M3/00 G01N33/48 G01N35/00

CPC: G01N35/08 G01N2035/00326 B01L3/502715 B01L3/50273 B01L3/502738 B01L2200/02 B01L2200/025 B01L2200/026 B01L2200/028 B01L2200/16 B01L2300/042 B01L2300/0609 B01L2300/0672 B01L2300/0829 B01L2400/0478 B01L2400/0644 F04B19/006 G01N21/01 G01N21/75 F16K99/0001 G01N21/00 F04B7/0046 F04B53/14 F04B53/144 B01L2200/027 B01L2300/1827 B01L2400/0683

US class: 1/1 435/287.2

Classification Explorer

Cited documents: WO9859066 A1, WO9859066 A1, WO9106678 A1, WO9106678 A1, WO15138648 A1, WO15138648 A1, WO14100456 A1, WO14008381 A2, WO14008381 A2, WO09137435 A1, WO09137435, WO09042862 A1, WO09042862, WO09042862, WO09021215 A1, WO07135368 A2, WO07135368, WO07123744 A2, WO07123744, WO07010251 A2, WO07010251, WO06065598 A2, WO06064199 A1, WO06064199, WO05065814 A1, WO05065814, WO05010145 A2, WO05010145 A1, WO05010145, WO04018497 A2, WO04018497, US9404881 BB, US9127313 BB, US7595883 BA, US7595883, US7592435 BB, US7592435, US7566537 BB, US7566537, US7541444 BB, US7541444, US7427673 BB, US7427673, US7414116 BB, US7414116, US7405281 BB, US7405281, US7329860 BB, US7329860, US7329492 BB, US7329492, US7315019 BB, US7315019, US7211414 BB, US7211414, US7115400 BA, US7115400, US7057026 BB, US7057026, US7001792 BB, US7001792, US6783736 BA, US63877009, US6274320 BA, US6274320, US6258568 BA, US6258568, US6210891 BA, US6210891, US5641658 A, US5641658 A, US2014151224 AA, US2014004621 AA, US2010157086 AA, US2009272914 AA, US2009272914 AA, US2008108082 AA, US2008108082 AA, US2008009420 AA, US2008009420 AA, US2007166705 AA, US2007166705 AA, US2007128624 AA, US2007128624 AA, US2007099208 AA, US2007099208 AA, US2007007991,

US2006281109 AA, US2006281109 AA, US2006240439 AA, US2006240439 AA, US2006188901 AA, US2006188901 AA, US2005181394 AA, US2005181394 AA, US2005130173 AA, US2005130173 AA, US2005100900 AA, US2005100900 AA, US2005079510 AA, US2005079510 AA, US2005064460 AA, US2005064460 AA, US2005042648 AA, US2005042648 AA, US2004096853 AA, US2004096853 AA, US2004002090 AA, US2004002090 AA, US2003207295 AA, US2003207295 AA, US2003170684 AA, US2003170684 AA, US2003108900 AA, US2003108900 AA, US2003108867 AA, US2003108867 AA, US2003108367 AA, US2002055100 AA, US2002055100 AA, DE2017959,

Forward Citations: US2019107487, US10466173,

Abstract:
A **cartridge** assembly that comprises a housing, including a flow cell chamber to receive a flow cell, and a well plate having liquid wells to receive desired amounts of liquids. The well plate includes a valve station, a pump station and a fluidics analysis station, and channels associated therewith. A pump assembly to manage fluid flow through the channels between the pump station and the fluidics analysis station. A rotary valve assembly that includes a rotor shaft and rotor valve positioned to rotate about a rotational axis and to selectively couple the wells to the pump station. The rotor shaft includes a dual spline configuration at the distal end thereof. The dual spline configuration has first and second sets of splines. The first set of splines forms a drive interface and the second set of splines forms a position encoding interface.

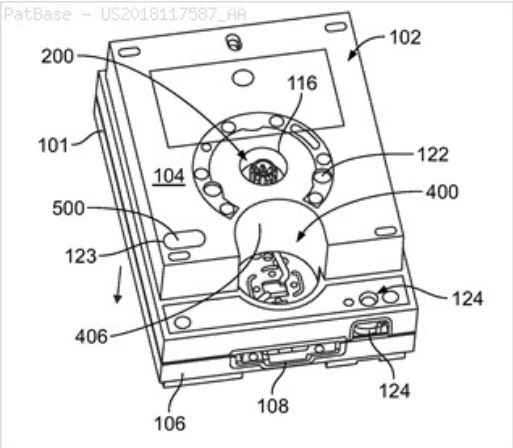

5) Family number: 66393441 (US2013078624A) © PatBase

Title: SYSTEMS AND METHODS FOR MULTI-PURPOSE ANALYSIS

Priority: WO2011US53188 20110925 US20110244949 20110926

Family:

Publication number	Publication date	Application number	Application date
US2013078624 AA	20130328	US20110244949	20110926
US9632102 BB	20170425	US20110244949	20110926

Probable Assignee: THERANOS IP CO LLC

Assignee(s):(std)**:** HOLMES ELIZABETH ; THERANOS INC ; THERANOS INC A DELAWARE CORP ; BALWANI SUNNY

Assignee(s): FORTRESS CREDIT CORP ; THERANOS IP CO LLC

Inventor(s):(std)**:** BALWANI SUNNY ; HOLMES ELIZABETH

International class (IPC 8-9): C12M1/34 C12Q1/00 C12Q1/02 C12Q1/28 C12Q1/68 G01N21/75 G01N27/26 G01N27/447 G01N30/02 G01N33/48 G01N33/559 G01N33/566 G01N33/86 G01N35/00 G01N35/02 (Advanced/Invention)

CPC: G01N35/02 C12Q1/00 C12Q1/02 C12Q1/28 C12Q1/68 G01N30/02 G01N33/48 G01N33/559 G01N33/566 G01N33/86 G01N35/00 G01N35/0092 G01N2035/00326 G01N2035/00495

US class: 204/403.14 204/455 204/605 205/777.5 422/67 435/28 435/287.2 435/287.3 435/29 435/6.1 435/6.11 435/6.12 435/8 436/166 436/501 436/69 436/86 73/61.52

Classification Explorer

Cited documents: WO9949019 A3, WO9949019 A2, WO9904043 A1, WO9826277 A3, WO9826277 A2, WO9814605 A1, WO9735171 A1, WO9603637 A1, WO9508774 A2, WO9507463 A1, WO9215673 A1, WO9013668 A1, WO15035256 A2, WO14015199 A1, WO14004573 A1, WO13148866 A1, WO13052318 A1, WO13043203 A2, WO12100235 A2, WO12069925 A1, WO12054639 A2, WO12054638 A2, WO12054589 A2, WO12040641 A2, WO12012779 A2, WO11106512 A1, WO11106315 A1, WO10090857 A2, WO09130309 A1, WO09046227 A1, WO08050254 A1, WO07002579 A3, WO07002579 A2, WO06120656 A1, WO06090154 A1, WO05121780 A2, WO05072145 A3, WO05072145 A2, WO05065538 A2, WO05065157 A2, WO05025413 A2, WO04112602 A1, WO04059312 A1, WO04055198 A2, WO0244703 A2, WO02064038 A2, WO0104600 A1, WO0049176 A1, US9168523 BB, US9131884 BB, US9128015 BB, US9121801 BB, US8883518 BB, US8877507 BB, US8588807 BB, US8475739 BB, US8435738 BB, US8392585 BA, US8387811 BB, US8383421 BB, US8380541 BA, US8323564 BB, US8309317 BB, US8309035 BB, US8211386 BB, US8194235 BB, US8158430 BA, US8133671 BB, US8088593 BB, US8030080 BB, US8008066 BB, US7978665 BA, US7955867 BB, US7925069 BB, US7923256 BB, US7824890 BB, US7824612 BB, US7771926 BB, US7744821 BB, US7711800 BB, US7702524 BA, US7691332 BB, US7667184 BB, US7662343 BB, US7650395 BB, US7635594 BB, US7632462 BB, US7609654 BB, US7587201 BB, US7581660 BB, US7548034 BB, US7494791 BB, US7481787 BB, US7438857 BB, US7429652 BB, US7422554 BB, US7416844 BB, US7394363 BA, US7361466 BB, US7358098 BB, US7276158 BA, US7272252 BB, US7185551 BB, US7172897 BB, US7170050 BB, US7141213 BA, US7109293 BB, US7056676 BB, US7052847 BB, US7033764 BB, US6949377 BB, US6947582 BA, US6946251 BB, US6917726 BB, US6905816 BB, US6899848 BA, US6859830 BA, US6858185 BA, US6833246 BB, US6825921 BA, US6805842 BA, US6780645 BB, US6752965 BB, US6748337 BB, US6732598 BB, US6689615 BA, US6663003 BB, US6627160 BB, US6605213 BA, US6599476 BA, US6589789 BA, US6583879 BA, US6565813 BA, US6517475 BA, US6509193 BA, US6506611 BB, US6484897 BA, US6477394 BB, US6468474 BB, US6440725 BA, US6420143 BA, US6410278 BA, US6407213 BA, US6379929 BA, US6375028 BA, US6372185 BA, US6361486 BA, US6348176 BA, US6341490 BA, US6333157 BA, US6309828 BA, US6294331 BA, US6291249 BA, US6290907 BA, US6277605 BA, US6251639 BA, US6244119 BA, US6235534 BA, US6210891 BA, US6197572 BA, US6191852 BA, US6180370 BA, US6180370 B1, US6168914 BA, US6168914 B1, US6159368 A, US6143252 A, US6121054 A, US6115545 A, US6114122 A, US6091490 A, US6074616 A, US6063341 A, US6060022 A, US6056661 A, US6054297 A, US6042909 A, US6033850 A, US6030582 A, US6013528 A, US5993417 A, US5980830 A, US5961451 A, US5939291 A, US5925558 A, US5915284 A,

US5906795 A, US5902549 A, US5876995 A, US5874304 A, US5859205 A, US5854033 A, US5844686 A, US5821337 A, US5807523 A, US5804387 A, US5779981 A, US5777079 A, US5772962 A, US5758443 A, US5741668 A, US5741411 A, US5693762 A, US5693761 A, US5693233 A, US5683888 A, US5670375 A, US5628890 A, US5602647 A, US5585089 A, US5580529 A, US5578270 A, US5578269 A, US5551241 A, US5545540 A, US5530101 A, US5527670 A, US5527257 A, US5507410 A, US5483799 A, US5480784 A, US5475096 A, US5456652 A, US5455166 A, US5443790 A, US5418155 A, US5416879 A, US5399491 A, US5393903 A, US5380487 A, US5324481 A, US5322770 A, US5320808 A, US5310652 A, US5292658 A, US5281395 A, US5273905 A, US5270184 A, US5270163 A, US5230864 A, US5186162 A, US5171534 A, US5130238 A, US5112574 A, US5089229 A, US5072382 A, US5061449 A, US5055263 A, US5005981 A, US4967604 A, US4933291 A, US4925629 A, US4830832 A, US4822331 A, US4816567 A, US4810096 A, US4784834 A, US4756884 A, US4744955 A, US4683195 A, US4593837 A, US4554839 A, US4545497 A, US4488814 A, US4486315 A, US4460351 A, US4437586 A, US4362698 A, US4327595 A, US4276258 A, US4270921 A, US4250830 A, US4157781 A, US4010893 A, US3953172 A, US3865495 A, US3766381 A, US3722789 A, US3696971 A, US3640434 A, US3600900 A, US2398234 A, US2016320381 AA, US2016266163 AA, US2016266158 AA, US2016266108 AA, US2016103123 AA, US2016084863 AA, US2016077015 AA, US2016070884 AA, US2016069921 AA, US2016069920 AA, US2016069919 AA, US2016054343 AA, US2016033544 AA, US2016032361 AA, US2016025763 AA, US2016025760 AA, US2016011225 AA, US2016011215 AA, US2016003823 AA, US2015368717 AA, US2015338428 AA, US2015198588 AA, US2015072889 AA, US2015072362 AA, US2015072338 AA, US2014342371 AA, US2014335505 AA, US2014295447 AA, US2014295440 AA, US2014295439 AA, US2014287955 AA, US2014272938 AA, US2014229955 AA, US2014170735 AA, US2014170691 AA, US2014170688 AA, US2014081665 AA, US2014073043 AA, US2014057770 AA, US2014057255 AA, US2014045170 AA, US2013274139 AA, US2013252320 AA, US2013244898 AA, US2013243794 AA, US2013080071 AA, US2013078149 AA, US2012309636 AA, US2012291872 AA, US2012224179 AA, US2012206587 AA, US2012178091 AA, US2012171759 AA, US2012142043 AA, US2012141339 AA, US2012071313 AA, US2012059664 AA, US2012053068 AA, US2011287447 AA, US2011256025 AA, US2011233148 AA, US2011218428 AA, US2011213619 AA, US2011213579 AA, US2011213564 AA, US2011207617 AA, US2011201121 AA, US2011189785 AA, US2011183433 AA, US2011176051 AA, US2011143947 AA, US2011130740 AA, US2011129931 AA, US2011124128 AA, US2011116385 AA, US2011093249 AA, US2011008825 AA, US2011007261 AA, US2011003699 AA, US2011003392 AA, US2010294950 AA, US2010291588 AA, US2010262432 AA, US2010256470 AA, US2010246416 AA, US2010240544 AA, US2010215644 AA, US2010184093 AA, US2010174181 AA, US2010152885 AA, US2010151472 AA, US2010132487 AA, US2010124746 AA, US2010121156 AA, US2010111773 AA, US2010082781 AA, US2010081894 AA, US2010081144 AA, US2010047790 AA, US2010047128 AA, US2010034706 AA, US2010034492 AA, US2010015634 AA, US2010009831 AA, US2010009460 AA, US2010009456 AA, US2010009364 AA, US2009318775 AA, US2009305392 AA, US2009298129 AA, US2009298075 AA, US2009274587 AA, US2009274348 AA, US2009246782 AA, US2009215157 AA, US2009208966 AA, US2009204435 AA, US2009203085 AA, US2009181463 AA, US2009148941 AA, US2009143235 AA, US2009124284 AA, US2009117009 AA, US2009104079 AA, US2009098594 AA, US2009094361 AA, US2009093970 AA, US2009088336 AA, US2009081648 AA, US2009059218 AA, US2009057259 AA, US2009043607 AA, US2009004754 AA, US2008299652 AA, US2008261210 AA, US2008253933 AA, US2008253927 AA, US2008228107 AA, US2008206751 AA, US2008198379 AA, US2008179301 AA, US2008166753 AA, US2008153096 AA, US2008144005 AA, US2008118988 AA, US2008065420 AA, US2008038771 AA, US2008032416 AA, US2008019878 AA, US2008003649 AA, US2008001735 AA, US2007295113 AA, US2007269345 AA, US2007264629 AA, US2007224084 AA, US2007207450 AA, US2007207161 AA, US2007202538 AA, US2007192138 AA, US2007177778 AA, US2007154922 AA, US2007149874 AA, US2007146873 AA, US2007134128 AA, US2007125677 AA, US2007118399 AA, US2007109294 AA, US2007077173 AA, US2007073113 AA, US2007059196 AA, US2007055538 AA, US2007048188 AA, US2007035819 AA, US2007004577 AA, US2006292039 AA, US2006275861 AA, US2006264783 AA, US2006264782 AA, US2006264780 AA, US2006263871 AA, US2006263263 AA, US2006223178 AA, US2006210435 AA, US2006183217 AA, US2006182738 AA, US2006160170 AA, US2006121502 AA, US2006121491 AA, US2006115384 AA, US2006110725 AA, US2006095429 AA, US2006083660 AA, US2006074063 AA, US2006073538 AA, US2006062852 AA, US2006062697 AA, US2006057599 AA, US2006034732 AA, US2006026040 AA, US2006024841 AA, US2006019274 AA, US2006013733 AA, US2005236317 AA, US2005231723 AA, US2005227370 AA, US2005225751 AA, US2005220668 AA, US2005180892 AA, US2005176940 AA, US2005164204 AA, US2005159982 AA, US2005152900 AA, US2005147559 AA, US2005125258 AA, US2005106713 AA, US2005100937 AA, US2005074873 AA, US2005010098 AA, US2004241048 AA, US2004241043 AA, US2004230400 AA, US2004228766 AA, US2004166027 AA, US2004161368 AA, US2004134750 AA, US2004127252 AA, US2004120848 AA, US2004115720 AA, US2004109793 AA, US2004099628 AA, US2004087426 AA, US2004086872 AA, US2004058378 AA, US2004055361 AA, US2004044560 AA, US2004029266 AA, US2004022677 AA, US2004020310 AA, US2004014202 AA, US2004005699 AA, US2003211618 AA, US2003208113 AA, US2003207463 AA, US2003175993 AA, US2003175164 AA, US2003170705 AA, US2003138140 AA, US2003127609 AA, US2003100822 AA, US2003077207 AA, US2003064386 AA, US2003052074 AA, US2003049865 AA, US2003012699 AA, US2002187074 AA, US2002176801 AA, US2002168784 AA, US2002164770 AA, US2002161606 AA, US2002160353 AA, US2002156365 AA, US2002155616 AA, US2002155599 AA, US2002149772 AA, US2002141904 AA, US2002139936 AA, US2002130100 AA, US2002127708 AA, US2002120187 AA, US2002114739 AA, US2002110496 AA, US2002108857 AA, US2002087101 AA, US2002085952 AA, US2002074882 AA, US2002065457 AA, US2002059030 AA, US2002052761 AA, US2002039723 AA, US2001048899 AA, US2001019845 AA, SU598649 A1, SU598649 A, SU1722603 A1, RU2237426 C2, RU2179887 C1, RU2148438 C1, JP8211071 A2, JP8122336 A2, JP7304799 A2, JP6420453 A2, JP64020453 A2, JP6382359 A2, JP63082359 A2, JP61254833 A2, JP61202142 A2, JP3181853 A2, JP2011174746 A2, JP2010175342 A2, JP2008064701 A2, JP2007187677 A2, JP2007178328 A2, JP2007017354 A2, JP2005291954 A2, JP2005130855 A2, JP2005010179 A2, JP2004101381 A2, JP2003329696 A2, JP2002538440 T2, JP2001255272 A2, JP2000258341 A2, JP1157560 A2, JP11057560, FR2498331 A1, EP2298931 B1, EP2259070 A3, EP2259070 A2, EP1722235 A1, EP1498067 A1, EP1129783 A2, EP1054250 A1, EP0871034 A2, EP0828222 B1, EP0684315 A1, EP0488761 B1, EP0410645 A2, CN1526074 A, CN103212491 A, CN102974474 A, CN101128738 A, CN101031362 A, CN101010579 A,

Forward Citations: WO18119321, WO14207243, WO14145296, US9957560, US9952240, US9916428, US9885729, US9880183, US9810704, US9719990, US9677993, US9651519, US9645143, US9619627, US9592508, US9588109, US9581588, US9529976, US9528968, US9464981, US9460268, US9359632, US9316594, US9302264, US9285366, US9250229, US9128015, US9127313, US9121851, US9057681, US9012163, US8822167, US8697377, US2019041596, US2018064382, US2017315041, US2017108438, US2016353603, US2016187362, US2016131620, US2015362431, US2015072338, US2014377771, US2014355645, US2014161223, US2014126751, US2013323845, US2013252342, US2012322679, US10579150, US10572027, US10570440, US10557863, US10557786, US10540001, US10534009, US10522245, US10518265, US10516940, US10509478, US10503883, US10501767, US10496182, US10492302, US10459080, US10409385, US10401490, US10391496, US10386330, US10379621, US10371710, US10345214, US10339771, US10336352, US10310621, US10310620, US10300370, US10285456, US10283217, US10268321, US10241581, US10239063, US10233480, US10233479, US10222469, US10221450, US10203763, US10194239, US10175781, US10155274, US10149401, US10139916, US10080841, US10073086, US10072982, US10018643, US10012664, TWI503670, RU2665202, EP3013480, EP2970922, CN108315231, CN107918006, CN107918006, CN107632053, CN107632053, CN104605934,

Abstract:
Systems and methods are provided for sample processing. A device may be provided, capable of receiving the sample, and performing one or more of a sample preparation, sample assay, and detection step. The device may be capable of performing multiple assays. The device may comprise one or more modules that may be capable of performing one or more of a sample

preparation, sample assay, and detection step. The device may be capable of performing the steps using a small volume of sample.

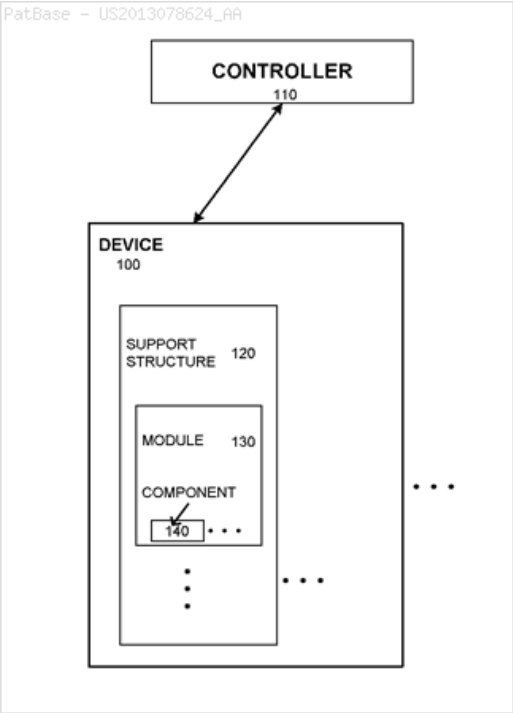

6) Family number: 56436445 (US2014134616A)

© PatBase

Title: NUCLEIC ACID SEQUENCING USING TAGS

Priority:

US20120724869P	20121109	US20120737621P	20121214	US20130880407P	20130920
US20130073445	20131106	WO2013US68967	20131107	US20170449757	20170303
US20170469799	20170327	US20170849581	20171220		

Family:

Publication number	Publication date	Application number	Application date
AU2013341172 AA	20150528	AU20130341172	20131107
CA2890218 AA	20150505	CA20132890218	20131107
CN104955958 A	20150930	CN201380058224	20131107
EP2917372 A1	20150916	EP20130853114	20131107
EP2917372 A4	20161005	EP20130853114	20131107
JP2016504019 T2	20160212	JP20150541895T	20131107
JP6465805 B2	20190206	JP20150541895T	20131107
US2014134616 AA	20140515	US20130073445	20131106
US2017241948 AA	20170824	US20170449757	20170303
US2018030524 AA	20180201	US20170469799	20170327
US2019382833 AA	20191219	US20170849581	20171220
US9605309 BB	20170328	US20130073445	20131106
US10526647 BB	20200107	US20170449757	20170303
WO14074727 A1	20140515	WO2013US68967	20131107

Probable Assignee: GENIA TECHNOLOGIES INC

Assignee(s):(std)**:** DORWART MICHAEL ; GENIA TECHNOLOGIES INC ; GENIA TECH INC ; KALACHIKOV SERGEY ; JU JINGYUE ; MOROZOVA IRINA ; TRUSTEES OF COLUMBIA UNIV IN CITY OF NEW YORK ; UNIV COLUMBIA ; ROCHE SEQUENCING SOLUTIONS INC

Assignee(s): NATIONAL INSTITUTES OF HEALTH NIH US DEPT OF HEALTH AND HUMAN SERVICES DHHS US GOVERNMENT ; BIBILLO ARKADIUSZ ; CHEN ROGER ; CHEN ROGER JA ; DAVIS RANDALL ; DAVIS RANDALL W ; GLENVIEW CAPITAL MASTER FUND LTD ; GLENVIEW CAPITAL OPPORTUNITY FUND LP ; GLENVIEW CAPITAL PARTNERS LP ; GLENVIEW INSTITUTIONAL PARTNERS LP ; GLENVIEW OFFSHORE OPPORTUNITY MASTER FUND LTD ; KORENBLUM DANIEL

Inventor(s):(std)**:** KORENBLUM DANIEL ; BIBILLO ARKADIUSZ ; CHEN ROGER ; DAVIS RANDALL ; DORWART MICHAEL ; R CHEN ; DAVIS RANDALL W ; KALACHIKOV SERGEY ; JU JINGYUE ; MOROZOVA IRINA ; CHEN ROGER J A

Inventor(s): CHEN ROGER JA

Agent(s): SPRUSON AND FERGUSON; BORDEN LADNER GERVAIS LLP; TESCHEMACHER ANDREA; YAMAMOTO OSAMU; TAKEUCHI SHIGEO; ONO SHINJIRO; KOBAYASHI YASUSHI; VICTORIA L; ADAM K; FISHERBROYLES LLP; WHITE JOHN P; GERSHIK GARY J; COOPER AND DUNHAM LLP; ALEMOZAFAR ALI R ET AL

Designated states: AE AG AL AM AO AT AU AZ BA BB BE BF BG BH BJ BN BR BW BY BZ CA CF CG CH CI CL CM CN CO CR CU CY CZ DE DK DM DO DZ EC EE EG ES FI FR GA GB GD GE GH GM GN GQ GR GT GW HN HR HU ID IE IL IN IR IS IT JP KE KG KM KN KP KR KZ LA LC LI LK LR LS LT LU LV LY MA MC MD ME MG MK ML MN MR MT MW MX MY MZ NA NE NG NI NL NO NZ OM PA PE PG PH PL PT QA RO RS RU RW SA SC SD SE SG SI SK SL SM SN ST SV SY SZ TD TG TH TJ TM TN TR TT TZ UA UG US UZ VC VN ZA ZM ZW

International class (IPC 8-9): C12M1/00 C12M1/34 C12Q1/68 C12Q1/6844 C12Q1/6869 C12Q1/6876 G01N27/414 G01N27/416 G01N27/447 G01N33/48 G01N33/487 G1N33/48 (Advanced/Invention)

CPC: C12Q2527/113 C12Q2535/122 C12Q2563/113 C12Q2565/631 C12Q2537/157 C12Q1/6874 C12Q1/6883 C12Q1/6869 G01N33/48721 G01N27/44717 G01N27/44791

US class: 1/1 204/601 435/287.2 435/6.11 530/402 568/672

Cited documents: WOWO1997046704, WOWO1997032999, WOWO1993021340, WOWO1991006678, WO9746704 A1, WO9732999 A1, WO9321340 A1, WO9106678 A1, WO18183538 A1, WO17205336 A1, WO17176679 A1, WO17176677 A1, WO17087887 A1, WO17058953 A1, WO13191793 A1, WO13154999 A2, WO13109970 A1, WO13016486 A1, WO12121756 A1, WO12088341 A2, WO12088339 A2, WO12083249 A2, WO12083249, WO12009578 A2, WO11106459 A2, WO11097028 A1, WO11067559 A1, WO11038241 A1, WO10132603 A1, WO10109197 A2, WO09054922 A1, WO09051807 A1, WO09020682 A2, WO08124107 A1, WO08102120 A1, WO08069973 A3, WO08069973 A2, WO08034602 A3, WO08034602 A2, WO07146158 A1, WO07127327 A2, WO07062105 A3, WO07062105 A2, WO07053719 A3, WO07053719 A2, WO07053702 A3, WO07053702 A2, WO07002204 A3, WO07002204 A2, WO06020775 A2, WO05084367 A3, WO05084367 A2, WO04090154 A2, WO04072238 A2, WO04071155 A2, WO04055160 A3, WO04055160 A2, WO04007773 A1, WO03020734 A2, WO0229003 A3, WO0229003 A2, WO0222883 A1, WO02079519 A1, WO0148235 A2, US9890426 BB, US9868985 BB, US9725480 BB, US9719139 BB, US9718852 BB, US9708358 BB, US9670539 BB, US9624539 BB, US9528151 BB, US9017937 BA, US8541849 BB, US8461854 BB, US8324914 BB, US8298792 BB, US8257954 BB, US8252911 BB, US8192961 BB, US8148516 BB, US8137569 BB, US8133672 BB, US8088575 BB, US8058414 BB, US8058031 BB, US8058030 BB, US8022511 BB, US7989928 BB, US7982029 BB, US7973146 BB, US7948015 BB, US7947454 BB, US7939270 BB, US7939259 BB, US7924335 BB, US7906371 BB, US7897738 BB, US7883869 BB, US7871777 BB, US7790869 BB, US7777505 BB, US7777013 BB, US7745116 BB, US7727722 BB, US7713698 BB, US7710479 BB, US7635578 BB, US7626379 BB, US7625701 BB, US7622934 BB, US7622279 BB, US7452698 BB, US7446017 BB, US7405281 BB, US7368668 BB, US7361466 BB, US7345159 BB, US7321329 BB, US7279337 BB, US7244602 BB, US7238485 BB, US7233541 BB, US7229799 BB, US7223541 BB, US7189503 BB, US7153672 BA, US7074597 BB, US7057026 BB, US7052839 BB, US7041812 BB, US7033762 BB, US6952651 BB, US6916665 BB, US6891278 BB, US6880346 BA, US6824659 BB, US6800933 BA, US6794177 BB, US6762048 BB, US6746594 BB, US6723513 BB, US6699719 BB, US6686997 BA, US6673615 BB, US6664079 BB, US6627748 BA, US6616895 BB, US6607883 BA, US6485703 BA, US6413792 BA, US6399335 BA, US6399320 BA, US6383749 BB, US6362002 BA, US6321101 BA, US6265193 BA, US6261797 BA, US6255083 BA, US6232103 BA, US6217731 BA, US6210896 BA, US6082115 A, US6046005 A, US6015714 A, US6014213 A, US6012291 A, US5981733 A, US5952180 A, US5939301 A, US5912155 A, US5876936 A, US5869244 A, US5814454 A, US5804386 A, US5795782 A, US5770367 A, US5756355 A, US5576204 A, US5569950 A, US5457342 A, US5308539 A, US5302509 A, US5198543 A, US4859945 A, US4121192 A, US2656508 A, US2019153527 AA, US2019136308 AA, US2019135851 AA, US2019135850 AA, US2019112650 AA, US2019092806 AA, US2019092805 AA, US2019085388 AA, US2019085016 AA, US2019085015 AA, US2019085014 AA, US2019031706 AA, US2019031705 AA, US2019031704 AA, US2018327828 AA, US2018274024 AA, US2018201642 AA, US2018112257 AA, US2018073071 AA, US2018030524 AA, US2017283451 AA, US2017058335 AA, US2016264612 AA, US2016076092 AA, US2015197800 AA, US2014093869 AA, US2014034497 AA, US2014014513 AA, US2013280700 AA, US2013264207 AA, US2013263946 AA, US2013244340 AA, US2013240359 AA, US2013237460 AA, US2013207205 AA, US2013015068 AA, US2012261261 AA, US2012196759 AA, US2012188092 AA, US2012187963 AA, US2012160688 AA, US2012160687 AA, US2012160681 AA, US2012156680 AA, US2012149021 AA, US2012142006 AA, US2012115736 AA, US2012094332 AA, US2012094278 AA, US2012052188 AA, US2012040869 AA, US2012034602 AA, US2011287414 AA, US2011244447 AA, US2011229877 AA, US2011218414 AA, US2011193570 AA, US2011193249 AA, US2011192723 AA, US2011189659 AA, US2011174625 AA, US2011168968 AA, US2011165652 AA, US2011160093 AA, US2011059505 AA, US2011053284 AA, US2011039259 AA, US2011014611 AA, US2011014604 AA, US2011014601 AB, US2011005918 AA, US2010331194 AA, US2010320094 AA, US2010304381 AA, US2010301398 AA, US2010297644 AA, US2010292101 AA, US2010261247 AA, US2010243449 AA, US2010196203 AA, US2010148126 AA, US2010129842 AA, US2010122907 AA, US2010121582 AA, US2010109197 AA, US2010093992 AA, US2010093555 AA, US2010092952 AA, US2010078777 AA, US2010075332 AA, US2010075328 AA, US2010072080 AA, US2010047802 AA, US2010035260 AA, US2010025249 AA, US2010025238 AA, US2009325154 AA, US2009298072 AA, US2009269759 AA, US2009263791 AA, US2009215050 AA, US2009167288 AA, US2009136958 AA, US2009102534 AA, US2009099786 AA, US2009087834 AA, US2009073293 AA, US2009066315 AA, US2009029477 AA, US2008318245 AA, US2008286768 AA, US2008221806 AA, US2008218184 AA, US2008199932 AA, US2008108082 AA, US2008101988 AA, US2007275387 AA, US2007196846 AA, US2007190542 AA, US2007173731 AA, US2007065816 AA, US2006278992 AA, US2006252038 AA, US2006115951 AA, US2006105461 AA, US2006057565 AA, US2005239194 AA, US2005221351 AA, US2005208574 AA, US2005186576 AA, US2005127035 AA, US2005091989 AA, US2005032081 AA, US2004185466 AA, US2004122335 AA, US2003198982 AA, US2003166282 AA, US2003101006 AA, US2003054360 AA, US2003027140 AA, US10260094 BB, US10246479 BB, US10240195 BB, US10144961 BB, US10000801 BB, CN102590314 A,

Forward Citations: WO20043653, WO20002621, WO20002516, WO19243421, WO19228995, WO19197590, WO19166458, WO19166457, WO19158548, WO19129555, WO19121845, WO19104076, WO19081442, WO19057890, WO19024524, WO18192940, WO18128706, WO18127785, WO18109102, WO18069484, WO18069484, WO18069302, WO18054970, WO18037096, WO18029108, WO18002125, WO17223515, WO17220732, WO17203059, WO17202917, WO17184866, WO17167811, WO17162828, WO17148862, WO17148861, WO17148860, WO17089520, WO17050723, WO17050722, WO17050718, WO16196755, WO16106690, WO16106689, WO16100749, WO16073318, WO15187670, US9890426, US9873911, US9863904, US9708655, US9557294, US9494554, US9399766, US9121059, US10590480, US10545112, US10526647, US10526588, US10443096, US10429375, US10364463, US10351908, US10317392, US10308918, US10301361, US10266813, US10246479, US10227645, US10126262, US10060903, RU2713396, JP6595005, JP6511142, JP6499291, JP2019527819, JP2018531002, JP2018520649, JP2018501484, JP2017538944, JP2017534889, JP2017529089, EP3268050, EP3233268, EP3212810, EP3212810, EP2682460, EP1762574, EP0981374, CN109313177, CN107533030, CN107250780, CN107110817, CN107110817, CN107077539,

Abstract:
This disclosure provides chips, systems and methods for sequencing a nucleic acid sample. Tagged nucleotides are provided into a reaction chamber comprising a nanopore in a membrane. An individual tagged nucleotide of the tagged nucleotides can contain a tag coupled to a nucleotide, which tag is detectable with the aid of the nanopore. Next, an individual tagged nucleotide of the tagged nucleotides can be incorporated into a growing strand complementary to a single stranded nucleic acid molecule derived from the nucleic acid sample. With the aid of the nanopore, a tag associated with the individual tagged nucleotide can be detected upon incorporation of the individual tagged nucleotide. The tag can be detected with the aid of the nanopore when the tag is released from the nucleotide.

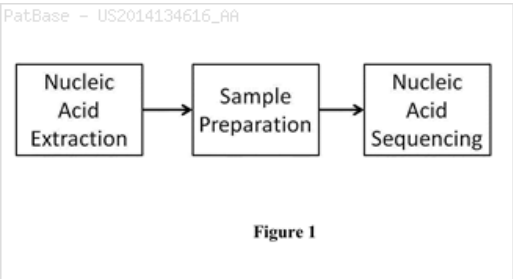

Figure 1

7) Family number: 66393457 (US2014296089A) © PatBase

Title: SYSTEMS AND METHODS FOR MULTI-ANALYSIS

Priority: US20130766113P 20130218 US20130766119P 20130218 US20140183500 20140218

Family:

Publication number	Publication date	Application number	Application date
US2014296089 AA	20141002	US20140183500	20140218
US9810704 BB	20171107	US20140183500	20140218

Probable Assignee: THERANOS IP CO LLC

Assignee(s):(std)**:** THERANOS INC

Assignee(s): THERANOS IP CO LLC ; FORTRESS CREDIT CORP

Inventor(s):(std)**:** GANGAKHEDKAR SUREKHA ; LATH ADRIT ; FRENZEL GARY ; PANGARKAR CHINMAY ; GIBBONS IAN ; BALWANI SUNNY ; CHEN MICHAEL ; ANEKAL SAMARTHA ; FRANKOVICH JOHN K ; PATEL PAUL ; SMITH TIMOTHY ; LOO ALEXANDER ; HOLMES ELIZABETH A ; ROY JOY ; YOUNG DANIEL

International class (IPC 8-9): B01L3/00 B01L3/02 B01L7/00 B01L9/06 C12Q1/42 C12Q1/52 C12Q1/68 C12Q1/70 C40B30/04 G01N21/25 G01N21/27 G01N33/543 G01N33/569 G01N33/62 G01N33/68 G01N33/80 G01N33/92 G01N35/00 G01N35/02 G01N35/04 G01N35/10 (Advanced/Invention);
B01L9/00 G01N15/00 G01N15/10 G01N15/14 (Advanced/Non-invention)

CPC: B01L9/06 B01L9/52 B01L9/543 B01L2300/1827 B01L2300/1855 G01N15/1475 G01N35/00069 G01N35/00871 G01N35/04 G01N35/1011 G01N35/1065 G01N2015/008 G01N2015/1486 G01N2035/00326 G01N2035/00366 G01N2035/00425 G01N2035/00495 G01N2035/0449 G01N2035/0474 G01N2035/0486 Y10T436/111666 Y10T436/113332 B01L3/021 B01L3/5082 B01L3/50855 B01L7/52 C12Q1/42 C12Q1/52 C12Q1/6883 C12Q1/70 G01N21/25 G01N21/27 G01N33/5005 G01N33/54306 G01N33/54313 G01N33/54366 G01N33/56983 G01N33/62 G01N33/6827 G01N33/80 G01N33/92 G01N35/00 G01N35/00029 G01N35/00623 G01N35/0092 G01N35/026 G01N35/10 G01N35/1009 G01N35/1072 G01N2015/0073 G01N2015/1006 G01N2035/00138 G01N2035/00148 G01N2035/00237 G01N2035/00306 G01N2035/00356 G01N2035/00435 G01N2035/00633 G01N2035/0491 G01N2035/0493 G01N2035/0494 G01N2201/024 G01N2201/04 G01N2201/12

US class: 1/1 435/13 435/287.2 435/287.3 435/288.7 435/29 435/39 435/5 435/6.11 435/6.12 435/7.1 435/7.92 506/39 506/9

Classification Explorer

Cited documents: WO9949019 A2, WO9904043 A1, WO9838510 A2, WO9826277 A2, WO9814605 A1, WO9735171 A1, WO9603637 A1, WO9508774 A2, WO9507463 A1, WO9215673 A1, WO9013668 A1, WO19038510 A3, WO15035256 A2, WO14015199 A1, WO14004573 A1, WO13148866 A1, WO13052318 A1, WO13043203 A2, WO12100235 A2, WO12069925 A1, WO12054639 A2, WO12054638 A2, WO12054589 A2, WO12040641 A2, WO12012779 A2, WO11106512 A1, WO11106315 A1, WO10090857 A8, WO09130309 A1, WO09046227 A1, WO08115632 A2, WO08050254 A1, WO07002579 A2, WO06120656 A1, WO06090154 A1, WO05121780 A2, WO05072145 A2, WO05065538 A2, WO05065157 A2, WO05025413 A2, WO04112602 A1, WO04059312 A1, WO04055198 A2, WO0244703 A2, WO02064038 A2, WO0104600 A1, WO0049176 A1, US9168523 BB, US9131884 BB, US9128015 BB, US9121801 BB, US8883518 BB, US8877507 BB, US8588807 BB, US8475739 BB, US8435738 BB, US8392585 BA, US8387811 BB, US8383421 BB, US8380541 BA, US8323564 BB, US8309317 BB, US8309035 BB, US8287820 BB, US8211386 BB, US8194235 BB, US8158430 BA, US8133671 BB, US8088593 BB, US8030080 BB, US8008066 BB, US7978665 BA, US7955867 BB, US7925069 BB, US7923256 BB, US7898569 BB, US7824890 BB, US7824612 BB, US7771926 BB, US7744821 BB, US7711800 BB, US7702524 BA, US7691332 BB, US7690275 BA, US7667184 BB, US7662343 BB, US7650395 BB, US7635594 BB, US7632462 BB, US7609654 BB, US7587201 BB, US7581660 BB, US7548034 BB, US7494791 BB, US7481787 BB, US7438857 BB, US7429652 BB, US7422554 BB, US7416844 BB, US7394363 BA, US7361466 BB, US7358098 BB, US7276158 BA, US7272252 BB, US7185551 BB, US7172897 BB, US7170050 BB, US7141213 BA, US7109293 BB, US7056676 BB, US7052847 BB, US7033764 BB, US6949377 BB, US6947582 BA, US6946251 BB, US6917726 BB, US6905816 BB, US6899848 BA, US6859830 BA, US6858185 BA, US6833246 BB, US6825921 BA, US6805842 BA, US6780645 BB, US6752965 BB, US6748337 BB, US6732598 BB, US6689615 BA, US6663003 BB, US6627160 BB, US6605213 BA, US6599476 BA, US6589789 BA, US6583879 BA, US6565813 BA, US6517475 BA, US6509193 BA, US6506611 BB, US6484897 BA, US6477394 BB, US6468474 BB, US6465953 BA, US6440725 BA, US6420143 BA, US6410278 BA, US6407213 BA, US6379929 BA, US6375028 BA, US6372185 BA, US6361486 BA, US6348176 BA, US6341490 BA, US6333157 BA, US6309828 BA, US6294331 BA, US6291249 BA, US6290907 BA, US6277605 BA, US6251639 BA, US6244119 BA, US6235534 BA, US6210891 BA, US6197572 BA, US6191852 BA, US6180370 BA, US6180370 B1, US6168914 BA, US6168914 B1, US6159368 A, US6143252 A, US6121054 A, US6115545 A, US6114122 A, US6091490 A, US6074616 A, US6063341 A, US6060022 A, US6056661 A, US6054297 A, US6042909 A, US6033850 A, US6030582 A, US6013528 A, US5993417 A, US5980830 A, US5961451 A, US5960160 A, US5939291 A, US5925558 A, US5915284 A, US5906795 A, US5902549 A, US5896297 A, US5876995 A, US5874304 A, US5859205 A, US5854684 A, US5854033 A, US5844686 A, US5821337 A, US5807523 A, US5804387 A, US5779981 A, US5777079 A, US5772962 A, US5758443 A, US5741668 A, US5741411 A, US5693762 A, US5693761 A, US5693233 A, US5683888 A, US5670375 A, US5628890 A, US5602647 A, US5585089 A, US5580529 A, US5578270 A, US5578269 A, US5551241 A, US5545540 A, US5530101 A, US5527670 A, US5527257 A, US5518923 A, US5507410 A, US5483799 A, US5480784 A, US5475096 A, US5456652 A, US5455166 A, US5443790 A, US5418155 A, US5416879 A, US5399491 A, US5393903 A, US5380487 A, US5324481 A, US5322770 A, US5320808 A, US5310652 A, US5292658 A, US5281395 A, US5273905 A, US5270184 A, US5270163 A, US5230864 A, US5186162 A, US5171534 A, US5130238 A, US5112574 A, US5089229 A, US5072382 A, US5061449 A, US5055263 A, US5005981 A, US4967604 A, US4933291 A, US4925629 A, US4830832 A, US4822331 A, US4816567 A, US4810096 A, US4784834 A, US4756884 A, US4744955 A, US4683195 A, US4593837 A, US4554839 A, US4545497 A, US4488814 A, US4486315 A, US4460351 A, US4437586 A, US4362698 A, US4327595 A, US4276383 A, US4276258 A, US4270921 A, US4250830 A, US4157781 A, US4010893 A, US3953172 A, US3865495 A, US3766381 A, US3756920 A, US3722789 A, US3696971 A, US3640434 A, US3600900 A, US2398234 A, US2017038401 AA, US2016377640 AA, US2016370396 AA, US2016320381 AA, US2016266163 AA, US2016266158 AA, US2016266108 AA, US2016124009 AA, US2016103123 AA, US2016084863 AA, US2016077015 AA, US2016070884 AA, US2016069921 AA, US2016069920 AA, US2016069919 AA, US2016054343 AA, US2016033544 AA, US2016032361 AA, US2016025763 AA, US2016025760 AA, US2016011225 AA, US2016011215 AA, US2016003823 AA, US2015368717 AA, US2015338428 AA, US2015198588 AA, US2015072889 AA, US2015072362 AA, US2015072338 AA, US2014342371 AA, US2014335505 AA, US2014296089 AA, US2014295447 AA, US2014295440 AA, US2014295439 AA, US2014287955 AA, US2014272938 AA, US2014229955 AA, US2014170735 AA, US2014170691 AA, US2014170688 AA, US2014170678 AA, US2014081665 AA, US2014073043 AA, US2014057770 AA, US2014057255 AA, US2014045170 AA, US2013280143 AA, US2013274139 AA, US2013252320 AA, US2013244898 AA, US2013243794 AA, US2013080071 AA, US2013079599 AA, US2013079236 AA, US2013078733 AA, US2013078625 AA, US2013078624 AA, US2013078149 AA, US2013074614 AA, US2012309636 AA, US2012291872 AA, US2012282603 AA, US2012224179 AA, US2012206587 AA,

US2012178091 AA, US2012171759 AA, US2012149035 AA, US2012142043 AA, US2012141339 AA, US2012071313 AA, US2012059664 AA, US2012053068 AA, US2011287447 AA, US2011256025 AA, US2011233148 AA, US2011218428 AA, US2011213619 AA, US2011213579 AA, US2011213564 AA, US2011207619 AA, US2011207617 AA, US2011201121 AA, US2011201099 AA, US2011189785 AA, US2011183433 AA, US2011176051 AA, US2011143947 AA, US2011130740 AA, US2011129931 AA, US2011124128 AA, US2011116385 AA, US2011093249 AA, US2011034758 AA, US2011008825 AA, US2011007261 AA, US2011003699 AA, US2011003392 AA, US2010294950 AA, US2010291588 AA, US2010262432 AA, US2010256470 AA, US2010246416 AA, US2010240544 AA, US2010215644 AA, US2010184093 AA, US2010174181 AA, US2010152885 AA, US2010151472 AA, US2010132487 AA, US2010124746 AA, US2010121156 AA, US2010111773 AA, US2010105074 AA, US2010082781 AA, US2010081894 AA, US2010081144 AA, US2010047790 AA, US2010047128 AA, US2010034706 AA, US2010034492 AA, US2010015690 AA, US2010015634 AA, US2010009831 AA, US2010009460 AA, US2010009456 AA, US2010009364 AA, US2009325210 AA, US2009318775 AA, US2009305392 AA, US2009298129 AA, US2009298075 AA, US2009274587 AA, US2009274348 AA, US2009246782 AA, US2009223311 AA, US2009221059 AA, US2009215157 AA, US2009208966 AA, US2009204435 AA, US2009203085 AA, US2009181463 AA, US2009148941 AA, US2009143235 AA, US2009141272 AA, US2009124284 AA, US2009117009 AA, US2009104079 AA, US2009098594 AA, US2009094361 AA, US2009093970 AA, US2009088336 AA, US2009081648 AA, US2009059218 AA, US2009057259 AA, US2009043607 AA, US2009021728 AA, US2009004754 AA, US2008308404 AA, US2008299652 AA, US2008261210 AA, US2008253933 AA, US2008253927 AA, US2008228107 AA, US2008223841 AA, US2008206751 AA, US2008198379 AA, US2008179301 AA, US2008166753 AA, US2008153096 AA, US2008144005 AA, US2008118988 AA, US2008065420 AA, US2008038771 AA, US2008032416 AA, US2008026483 AA, US2008019878 AA, US2008003649 AA, US2008001735 AA, US2007295113 AA, US2007269345 AA, US2007264629 AA, US2007224084 AA, US2007207450 AA, US2007207161 AA, US2007202538 AA, US2007192138 AA, US2007177778 AA, US2007154922 AA, US2007149874 AA, US2007148759 AA, US2007146873 AA, US2007134128 AA, US2007125677 AA, US2007118399 AA, US2007109294 AA, US2007077173 AA, US2007073113 AA, US2007059196 AA, US2007055538 AA, US2007048188 AA, US2007035819 AA, US2007004577 AA, US2006292039 AA, US2006286619 AA, US2006275861 AA, US2006264783 AA, US2006264780 AA, US2006263871 AA, US2006263263 AA, US2006245978 AA, US2006223178 AA, US2006210435 AA, US2006183217 AA, US2006182738 AA, US2006160170 AA, US2006153736 AA, US2006121502 AA, US2006121491 AA, US2006115384 AA, US2006110725 AA, US2006095429 AA, US2006083660 AA, US2006074063 AA, US2006073538 AA, US2006062852 AA, US2006062697 AA, US2006057599 AA, US2006057559 AA, US2006051243 AA, US2006045806 AA, US2006034732 AA, US2006026040 AA, US2006024841 AA, US2006019274 AA, US2006013733 AA, US2005236317 AA, US2005231723 AA, US2005227370 AA, US2005225751 AA, US2005220668 AA, US2005180892 AA, US2005176940 AA, US2005164204 AA, US2005159982 AA, US2005152900 AA, US2005147559 AA, US2005125258 AA, US2005106713 AA, US2005100937 AA, US2005074873 AA, US2005010098 AA, US2004241048 AA, US2004241043 AA, US2004230400 AA, US2004228766 AA, US2004166027 AA, US2004161368 AA, US2004134750 AA, US2004127252 AA, US2004120848 AA, US2004115720 AA, US2004109793 AA, US2004099628 AA, US2004087426 AA, US2004086872 AA, US2004058378 AA, US2004055361 AA, US2004044560 AA, US2004029266 AA, US2004022677 AA, US2004020310 AA, US2004014202 AA, US2004005699 AA, US2003211618 AA, US2003208113 AA, US2003207463 AA, US2003175993 AA, US2003175164 AA, US2003170705 AA, US2003165398 AA, US2003138140 AA, US2003127609 AA, US2003100822 AA, US2003077207 AA, US2003064386 AA, US2003052074 AA, US2003049865 AA, US2003012699 AA, US2002192112 AA, US2002187074 AA, US2002176801 AA, US2002168784 AA, US2002164770 AA, US2002161606 AA, US2002160353 AA, US2002156365 AA, US2002155616 AA, US2002155599 AA, US2002149772 AA, US2002141904 AA, US2002139936 AA, US2002130100 AA, US2002127708 AA, US2002120187 AA, US2002114739 AA, US2002110496 AA, US2002108857 AA, US2002087101 AA, US2002085952 AA, US2002074882 AA, US2002065457 AA, US2002059030 AA, US2002052761 AA, US2002039723 AA, US2002019060 AA, US2001048899 AA, US2001019845 AA, TW265262 B, SU598649 A1, SU598649 A, RU2237426 C2, RU2179887 C1, RU2148438 C1, RU2147123 C1, JP8211071 A2, JP8122336 A2, JP7304799 A2, JP7027700 A2, JP6420453 A2, JP64020453 A2, JP6382359 A2, JP63082359 A2, JP61254833 A2, JP61202142 A2, JP3181853 A2, JP2011174746 A2, JP2010175342 A2, JP2008064701 A2, JP2007187677 A2, JP2007178328 A2, JP2007017354 A2, JP2005291954 A2, JP2005130855 A2, JP2005010179 A2, JP2004101381 A2, JP2003329696 A2, JP2003315348 A2, JP2002538440 T2, JP2001255272 A2, JP2000258341 A2, JP1157560 A2, JP11057560, FR2498331 A1, EP2298931 B1, EP2259070 A2, EP1722235 A1, EP1498067 A1, EP1129783 A2, EP1054250 A1, EP0871034 A2, EP0828222 B1, EP0684315 A1, EP0488761 B1, EP0410645 A2, CN1526074 A, CN103212491 A, CN102974474 A, CN101128738 A, CN101031362 A, CN101010579 A,

Forward Citations: WO19068392, WO19007868, WO18090030, WO18065118, WO18065118, WO18065114, WO18031786, WO17003933, WO16203019, WO16060691, US9999882, US9975742, US9970922, US9957560, US9952240, US9916428, US9865104, US9839388, US9810704, US9796233, US9719990, US9677993, US9651519, US9645143, US9629568, US9619627, US9594072, US9588109, US9581588, US9529976, US9464981, US9460268, US9429524, US9302264, US9285366, US9250229, US9165472, US9127313, US2018101706, US2017268984, US2017258385, US2016375738, US2016123868, US2015072338, US2014288614, US2012322679, US10576474, US10570440, US10557863, US10557786, US10534009, US10525460, US10522245, US10518265, US10513725, US10506954, US10501767, US10478822, US10464059, US10451612, US10422738, US10391496, US10386330, US10376889, US10371710, US10346653, US10283217, US10272425, US10256580, US10232369, US10221450, US10080841, US10018643, US10006083, US09999882, TWI658267, EP3599455, EP3492923, EP3425369, EP3411815, CN107003223,

Abstract:
Systems and methods are provided for sample processing. A device may be provided, capable of receiving the sample, and performing one or more of a sample preparation, sample assay, and detection step. The device may be capable of performing multiple assays. The device may comprise one or more modules that may be capable of performing one or more of a sample preparation, sample assay, and detection step. The device may be capable of performing the steps using a small volume of sample.

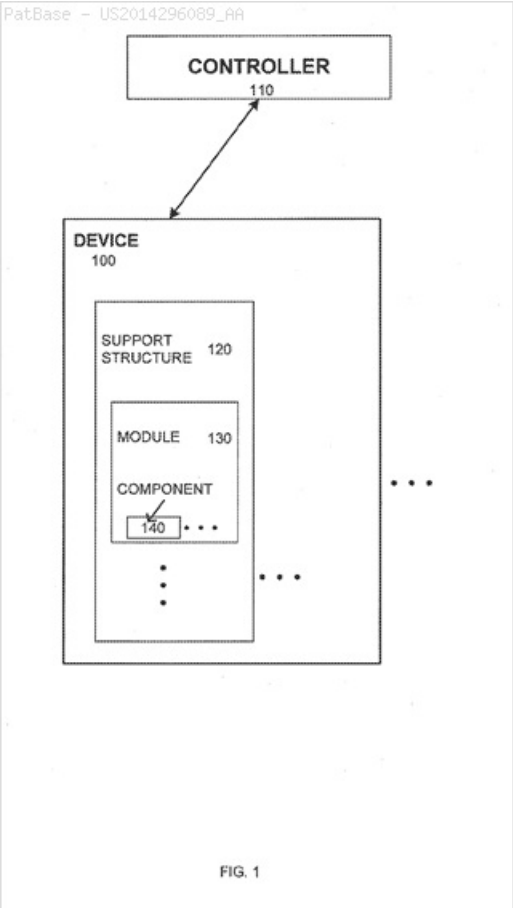

8) Family number: 66393458 (US2014308661A)

© PatBase

Title: SYSTEMS AND METHODS FOR MULTI-ANALYSIS

Priority:

WO2011US53188	20110925	WO2011US53189	20110925	US20110244946	20110926
US20110244947	20110926	US20110244949	20110926	US20110244952	20110926
US20110244950	20110926	US20110244953	20110926	US20110244956	20110926
US20110244954	20110926	WO2012US57155	20120925	US20130769779	20130218
US20130769820	20130218	US20130766113P	20130218	US20130766119P	20130218
US20140183503	20140218				

Family:

Publication number	Publication date	Application number	Application date
US2014308661 AA	20141016	US20140183503	20140218

Probable Assignee: THERANOS INC

Assignee(s):(std)**:** THERANOS INC

Assignee(s): THERANOS IP CO LLC ; FORTRESS CREDIT CORP

Inventor(s):(std)**:** YOUNG DANIEL ; ROY JOY ; HOLMES ELIZABETH A ; LOO ALEXANDER ; SMITH TIMOTHY ; PATEL PAUL ; FRANKOVICH JOHN K ; ANEKAL SAMARTHA ; CHEN MICHAEL ; BALWANI SUNNY ; GIBBONS IAN ; PANGARKAR CHINMAY ; FRENZEL GARY ; LATH ADRIT ; GANGAKHEDKAR SUREKHA

International class (IPC 8-9): G01N21/64 (Advanced/Invention)

CPC: G01N21/6486 G01N35/0092 G01N21/25 G01N21/6428 G01N35/00 G01N35/00732 G01N2015/1006 G01N2035/00326 G01N2035/00495 G01N2035/00811 G01N2035/0094

US class: 422/82.08 435/29 435/6.1

Classification Explorer

Cited documents: US6197572 BA, US6030582 A, US5854684 A, US5779981 A, US2009088336 AA, US2005231723 AA,

Forward Citations: WO16090244, WO16065183, WO16007353, US9957560, US9952240, US9916428, US9794454, US9719990, US9677993, US9651519, US9645143, US9619627, US9588109, US9581588, US9556478, US9529976, US9464981, US9460268, US9328381, US9302264, US9285366, US9250229, US9243222, US9127313, US9102979, US8986614, US2015339252, US2015191690, US2015072338, US2013076898, US2012322679, US10570440, US10557863, US10557786, US10534009, US10522245, US10518265, US10501767, US10451615, US10391496, US10386330, US10379130, US10371710, US10348834, US10291415, US10283217, US10221450, US10080841, US10018643, EP3236268,

Abstract:
Systems and methods are provided for sample processing. A device may be provided, capable of receiving the sample, and performing one or more of a sample preparation, sample assay, and detection step. The device may be capable of performing multiple assays. The device may comprise one or more modules that may be capable of performing one or more of a sample preparation, sample assay, and detection step. The device may be capable of performing the steps using a small volume of sample.

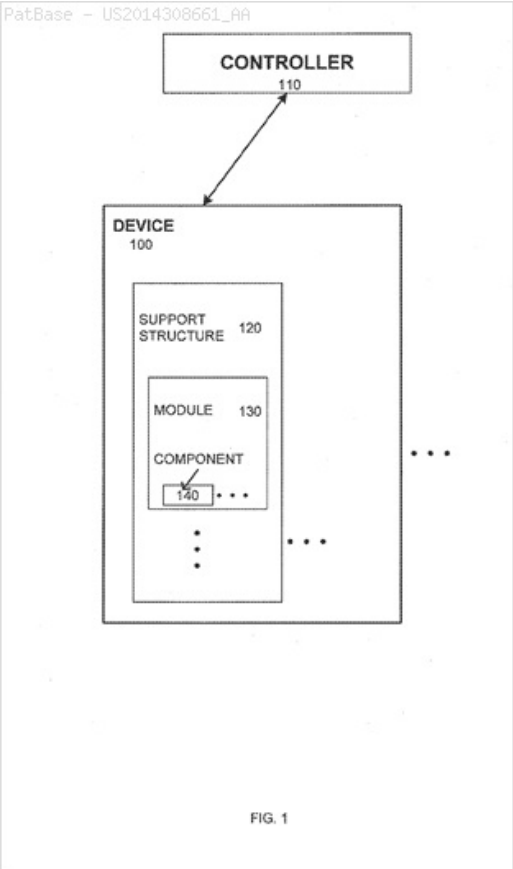

9) Family number: 47836495 (US2013217106A)

© PatBase

Title: BIOCHEMICAL ANALYSIS APPARATUS AND ROTARY VALVE

Priority: GB20100016606 20101001 GB20110009185 20110531 EP20110770853 20110930 WO2011GB01432 20110930 US20130876911 20130426 US20170419121 20170130

Family:

Publication number	Publication date	Application number	Application date
CN103370617 A	20131023	CN201180056404	20110930
CN103370617 B	20151125	CN201180056404	20110930
DE602011022850 D1	20160310	DE201160022850T	20110930
EP2622343 A2	20130807	EP20110770853	20110930
EP2622343 B1	20160120	EP20110770853	20110930
GB201016606 A0	20101117	GB20100016606	20101001
GB201109185 A0	20110713	GB20110009185	20110531
IN00860KN2013 A	20130712	IN2013KN00860	20130326
US2013217106 AA	20130822	US20110876911	20110930
US2017327880 AA	20171116	US20170419121	20170130
US9593370 BB	20170314	US20110876911	20110930
US10036065 BB	20180731	US20170419121	20170130
WO12042226 A2	20120405	WO2011GB01432	20110930
WO12042226 A3	20120524	WO2011GB01432	20110930

Probable Assignee: OXFORD NANOPORE TECHNOLOGIES LTD

Assignee(s):(std)**:** JONES ANTHONY ; OXFORD NANOPORE TECH LTD ; OXFORD NANOPORE TECHNOLOGIES LTD

Assignee(s): OXFORD NANOPORE TECHNOLOGIES LIMITED

Inventor(s):(std)**:** JONES ANTHONY

Agent(s): KRAUS AND WEISERT PATENTANWAELTE PARTGMBB; COONEY DANIEL THOMAS; WOLF GREENFIELD AND SACKS PC; MERRYWEATHER COLIN H ET AL

Designated states: AE AG AL AM AO AT AU AZ BA BB BE BF BG BH BJ BR BW BY BZ CA CF CG CH CI CL CM CN CO CR CU CY CZ DE DK DM DO DZ EC EE EG ES FI FR GA GB GD GE GH GM GN GQ GR GT GW HN HR HU ID IE IL IN IS IT JP KE KG KM KN KP KR KZ LA LC LI LK LR LS LT LU LV LY MA MC MD ME MG MK ML MN MR MT MW MX MY MZ NA NE NG NI NL NO NZ OM PE PG PH PL PT QA RO RS RU RW SC SD SE SG SI SK SL SM SN ST SV SY SZ TD TG TH TJ TM TN TR TT TZ UA UG US UZ VC VN ZA ZM ZW

International class (IPC 8-9): B01L3/00 C12Q1/68 C12Q1/6869 F16K11/06 F16K11/085 G01N1/00 G01N1/26 G01N33/487 G01N33/53 (Advanced/Invention);
B01L3/02 F16K11/074 G01N1/26 G01N30/00 G01N30/02 G01N30/60 G01N33/48 G01N33/92 (Advanced/Non-invention)

CPC: F16K11/085 G01N33/5306 F16K11/0743 G01N1/26 G01N33/92 B01L3/0293 B01L3/5027 B01L2300/0663 B01L2300/0829 B01L2400/0644 G01N30/6095 G01N33/48721 Y10T137/86871 C12Q1/6869

European class: B01L3/5027 G01N33/487B5 L01L3/02H2 L01L300/06B8 L01L300/08B12 L01L400/06M4 S01N30/60M

US class: 1/1 137/625.47 422/68.1 435/287.2

Classification Explorer

Cited documents: WO9905167 A1, WO9905167 A1, WO9835012 A2, WO9835012 A1, WO9720203 A1, WO9720203 A1, WO8903432 A1, WO8903432 A1, WO8101445 A1, WO19001445, WO12042226 A2, WO11067559 A1,

WO11067559 A1, WO10083147 A1, WO09077734 A2, WO09077734 A2, WO09045472 A1, WO09045472, WO09044170 A1, WO09044170, WO09020682 A2, WO08111863 A1, WO08111863 A1, WO08102121 A1, WO08102121, WO08102120 A1, WO08102120, WO08042018 A2, WO08042018, WO08008974 A2, WO07141058 A1, WO07127327 A2, WO07127327, WO07102836 A1, WO07084163 A2, WO07084163, WO07057668 A1, WO07057668, WO07054233 A1, WO06028508 A2, WO06028508, WO05124888 A1, WO05124888, WO05061373 A1, WO05061373, WO05035437 A2, WO05035437, WO05017356 A1, WO05017025 A2, WO05017025, WO05005829 A1, WO05000739 A1, WO05000739, WO05000732 A1, WO05000732, WO04077503 A2, WO04077503, WO03095669 A1, WO03095669, WO03017020 A1, WO03003446 A2, WO03003446, WO03000920 A2, WO03000920, WO0159684 A2, WO0159684, WO0159453 A2, WO0159453, WO0079257 A1, WO0079257, WO0078668 A1, WO0078668, US9593370 BB, US9551338 BB, US9194504 BB, US8312805 BA, US8162006 BB, US8123756 BB, US7869508 P, US7868708 P, US7766028 BB, US7682356 BB, US7537437 BB, US7360556 BB, US7258838 BB, US7258838, US7189503 BB, US7189503, US7001792 BB, US7001792, US6927070 BA, US6927070, US6627067 BA, US6627067, US6565535 BB, US6537451 BA, US6426231 BA, US6426231, US6413792 BA, US6413792, US6355420 BA, US6355420, US6254057 BA, US6090081 A, US6067864 A, US6067864 A, US6015714 A, US6015714 A, US6004300 A, US5902276 A, US5800405 A, US5795782 A, US5795782 A, US5771935 A, US5529280 A, US5496009 A, US5368712 A, US5368712 A, US4962037 A, US4962037 A, US4712583 A, US3799411 A, US3422848 A, US3270771 A, US26548809 P, US2461211 A, US2015031020 AA, US2014377108 AA, US2014314594 AA, US2014238497 AA, US2013217106 AA, US2013203634 AA, US2012322679 AA, US2011108147 AA, US2010148126 AA, US2010113762 AA, US2010113762 AA, US2010070069 AA, US2010062446 AA, US2009311117 AA, US2009167288 AA, US2009167288 AA, US2009029477 AA, US2009029477 AA, US2009026350 AA, US2008032290 AA, US2008032290 AA, US2008003147 AA, US2007219508 AA, US2007202008 AA, US2007202008 AA, US2007163656 AA, US2007072169 AA, US2006210995 AA, US2006105461 AA, US2006069356 AA, US2005227239 AA, US2003116206 AA, US2003116206 AA, US2002007139 AA, US2001035516 AA, US17072909 P, JP6319801 A2, JP2003328420 A2, JP2003235974 A2, GB9001690, GB896056 A, GB840499 A, GB2474073 A1, GB2447043 A1, GB2443260 A1, GB2009001679, GB0812697, GB0812693, FR2947873 A1, EP2165723 A1, EP2163273 B1, EP1956367 A1, EP1956367, EP1946793 A1, EP1640168 A2, EP1544310 A2, EP1351183 A2, EP1197693 A2, EP1192453 A1, EP1192453, EP0934757 A2, EP0925798 B1, EP0247824 A2, EP0086073 A2, EP0086073 A2,

DE202007012680 U1

DE202004009831 U1

DE102009006203 A1

DE102006026220 B4

CN201152237 Y, CN201152237 A, CN1678398 A, CN101267885 A, CN101224320 A, CH344883 A,

Forward Citations: WO19234432, WO19224517, WO19149626, WO19106345, WO18153377, WO18100370, WO18091494, WO18060740, WO18007819, WO15187868, WO14122467, WO14008381, WO14008381, WO13179066, WO13008010, US9970437, US9891182, US9885352, US9841416, US9777049, US9751915, US9650669, US9625404, US9593370, US9551338, US9533302, US9193996, US2013274148, US2013236374, US10549281, US10549274, US10514378, US10472673, US10443097, US10438662, US10428367, US10401353, US10400014, US10359395, US10342589, US10272436, US10266885, US10167503, US10077471, US10054234, US10036065, US10006905, TWI629076, JP6630566, JP2015523571, EP3223948, EP3151964, EP2953524, EP2870391, EP2870391, CN109844528, CN109310889, CN109310889, CN106573241, CN106133513, CN106133513, CN105115808, CN103278548,

Abstract:
An analysis apparatus for performing biochemical analysis of a sample using nanopores comprises: a sensor device that supports plural nanopores, reservoirs holding material for performing the analysis; a fluidics system; and plural containers for receiving respective samples, all arranged in a **cartridge** that is removably attachable to an electronics unit arranged to generate drive signals to perform signal processing circuit to generate output data representing the results of the analysis. The fluidics system supplies samples selectively from the containers to the sensor device using a rotary valve.

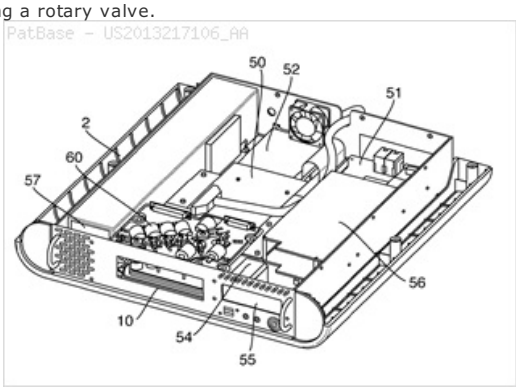

10) Family number: 53056495 (US2015344944A) © PatBase

Title: ANALYSIS OF A POLYNUCLEOTIDE VIA A NANOPORE SYSTEM

Priority: GB20120022928 20121219 WO2013GB53359 20131219 US20150653656 20150618 US20180162848 20181017

Family:

Publication number	Publication date	Application number	Application date
EP2935623 A1	20151028	EP20130821710	20131219
GB201222928 A0	20130130	GB20120022928	20121219
US2015344944 AA	20151203	US20130653656	20131219
US2019203286 AA	20190704	US20180162848	20181017
US10131943 BB	20181120	US20130653656	20131219
WO14096830 A1	20140626	WO2013GB53359	20131219

Probable Assignee: OXFORD NANOPORE TECHNOLOGIES LTD

Assignee(s):(std)**:** OXFORD NANOPORE TECH LTD ; OXFORD NANOPORE TECHNOLOGIES LTD

Assignee(s): OXFORD NANOPORE TECHNOLOGIES LIMITED

Inventor(s):(std)**:** HARPER GAVIN ; REID STUART WILLIAM

Agent(s): MERRYWEATHER COLIN HENRY; WOLF GREENFIELD AND SACKS PC

Designated states: AE AG AL AM AO AT AU AZ BA BB BE BF BG BH BJ BN BR BW BY BZ CA CF CG CH CI CL CM CN CO CR CU CY CZ DE DK DM DO DZ EC EE EG ES FI FR GA GB GD GE GH GM GN GQ GR GT GW HN HR HU ID IE IL IN IR IS IT JP KE KG KM KN KP KR KZ LA LC LI LK LR LS LT LU LV LY MA MC MD ME MG MK ML MN MR MT MW MX MY MZ NA NE NG NI NL NO NZ OM PA PE PG PH PL PT QA RO RS RU RW SA SC SD SE SG SI SK SL SM SN ST SV SY SZ TD TG TH TJ TM TN TR TT TZ UA UG US UZ VC VN ZA ZM ZW

International class (IPC 8-9): C12Q1/68 C12Q1/6806 C12Q1/6869 (Advanced/Invention)

CPC: C12Q1/6806 C12Q2525/161 C12Q2525/197 C12Q2565/631 C12Q1/6869

US class: 435/6.1 506/16 506/6

Classification Explorer

Cited documents: WO14096830 A1, WO14064444 A1, WO14064443 A2, WO14013262 A1, WO14013260 A1, WO14013259 A1, WO13185137 A1, WO13159042 A1, WO13153359 A1, WO13123379 A2, WO13121224 A1, WO13109970 A1, WO13098562 A2, WO13098561 A1, WO13057495 A2, WO13041878 A1, WO13014451 A1, WO12164270 A1, WO12138357 A1, WO12109483 A2, WO12107778 A2, WO12033524 A2, WO12021149 A1, WO12005857 A1, WO11067559 A1, WO11046706 A1, WO10122293 A1, WO10117470 A2, WO10109197 A2, WO10086622 A1, WO10086603 A1, WO10034018 A2, WO10004273 A1, WO10004265 A1, WO09077734 A2, WO09044170 A1, WO09035647 A1, WO08124107 A1, WO08102121 A1, WO08102120 A1, WO08092760 A1, WO07137225 A2, WO07117832 A2, WO06100484 A2, WO06028508 A2, WO05124888 A1, WO0242496 A2, WO0079257 A1, WO0028312 A1, WO0003933 A1, US9738929 BB, US9678056 BB, US9556480 BB, US9546400 BB, US9127313 BB, US9121064 BB, US9057102 BB, US8452546 BA, US8324914 BB, US7731826 BB, US6128587 A, US5795782 A, US2017233804 AA, US2017219557 AA, US2017096703 AA, US2017091427 AA, US2016162634 AA, US2015152492 AA, US2015057948 AA, US2014255918 AA, US2013146456 AA, US2013023423 AA, US2011226623 AA, US2011121840 AA, US2010331194 AA, US2008092760 AA, US2006019259 AA, US2005272923 AA, US2005159898 AA, US2003099951 AA, US2002197618 AA, JP2010539966 T2, JP2002325581 A2, JP11178575, EP1544310 A2, EP1351183 A2,

Forward Citations: WO20005994, WO16059427, US9996981, US9460557, US2016194698, US10131943, US10052026, JP2017532049, EP3215971,

Abstract:
A target polynucleotide is expanded. In respect of each nucleotide in the target polynucleotide, the target polynucleotide comprises clock nucleotides and at least one signal nucleotide in a predetermined order. The clock nucleotides have a predetermined sequence common to each nucleotide in the target polynucleotide. The at least one signal nucleotide is characteristic of the identity of the respective nucleotide in the target polynucleotide. During translocation of the expanded polynucleotide through a nanopore, electrical measurements dependent on the polynucleotide within the pore are made, to derive an analysis signal. Clock signals derived from the clock nucleotides are identified. Relative to the positions of the identified clock signals, nucleotide signals derived from the least one signal nucleotide are derived to analyse the target polynucleotide. The predetermined sequence of the clock nucleotides comprises a restriction site for a restriction enzyme and at least one further nucleotide that extends the predetermined sequence.

PatBase - US20153449 44 AA

Fig. 1

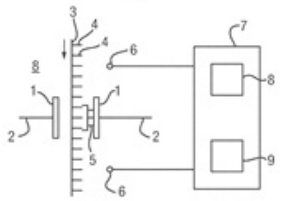

Fig. 2

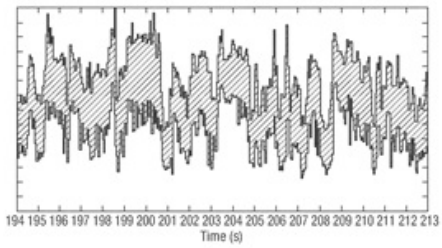

11) Family number: 49961499 (US2014314594A)

© PatBase

Title: PUMP

Priority: GB20110016019 20110915 GB20110016020 20110915 WO2012GB52233 20120911 WO2012GB52234 20120911 US20140344137 20140701 US20160384167 20161219 US20190410798 20190513

Family:

Publication number	Publication date	Application number	Application date
CN103930144 A	20140716	CN201280055843	20120911
CN103946544 A	20140723	CN201280055828	20120911
CN103946544 B	20170606	CN201280055828	20120911
EP2755703 A2	20140723	EP20120766131	20120911
EP2755703 B1	20191218	EP20120766131	20120911
EP2780592 A2	20140924	EP20120762672	20120911
GB201116019 A0	20111026	GB20110016019	20110915
GB201116020 A0	20111026	GB20110016020	20110915
GB2494682 A1	20130320	GB20110016019	20110915

GB2494683 A1	20130320	GB20110016020	20110915
IN00511KN2014 A	20140502	IN2014KN00511	20140311
IN00523KN2014 A	20140509	IN2014KN00523	20140312
US2014314594 AA	20141023	US20120344137	20120911
US2014377108 AA	20141225	US20120344463	20120911
US2017321694 AA	20171109	US20160384167	20161219
US2019282284 AA	20190919	US20190410798	20190513
US9551338 BB	20170124	US20120344137	20120911
US10342589 BB	20190709	US20160384167	20161219
US10596322 BB	20200324	US20190410798	20190513
WO13038163 A2	20130321	WO2012GB52233	20120911
WO13038163 A3	20131227	WO2012GB52233	20120911
WO13038164 A2	20130321	WO2012GB52234	20120911
WO13038164 A3	20131227	WO2012GB52234	20120911

Probable Assignee: OXFORD NANOPORE TECHNOLOGIES LTD

Assignee(s):(std)**:** JONES ANTHONY ; OXFORD NANOPORE TECH LTD ; OXFORD NANOPORE TECHNOLOGIES LTD ; UPSDELL JONATHAN

Assignee(s): OXFORD NANOPORE TECHNOLOGIES LIMITED

Inventor(s):(std)**:** UPSDELL JONATHAN ; JONES ANTHONY

Inventor(s): ANTHONY JONES ; JONATHAN UPSDELL

Agent(s): COONEY DANIEL THOMAS; STANNERS DAVID RALPH; WOLF GREENFIELD AND SACKS PC

Designated states: AE AG AL AM AO AT AU AZ BA BB BE BF BG BH BJ BN BR BW BY BZ CA CF CG CH CI CL CM CN CO CR CU CY CZ DE DK DM DO DZ EC EE EG ES FI FR GA GB GD GE GH GM GN GQ GR GT GW HN HR HU ID IE IL IN IS IT JP KE KG KM KN KP KR KZ LA LC LI LK LR LS LT LU LV LY MA MC MD ME MG MK ML MN MR MT MW MX MY MZ NA NE NG NI NL NO NZ OM PA PE PG PH PL PT QA RO RS RU RW SC SD SE SG SI SK SL SM SN ST SV SY SZ TD TG TH TJ TM TN TR TT TZ UA UG US UZ VC VN ZA ZM ZW

International class (IPC 8-9): A61B17/88 A61M5/145 A61M5/31 A61M5/315 B29C70/68 F04B13/00 F04B17/03 F04B53/14 F04B7/06 F04B9/02 F16J15/16 G01N35/10 (Advanced/Invention);
A61M5/145 B29L31/26 F04B17/03 F04B53/14 F04B9/02 (Advanced/Non-invention)

CPC: A61M5/315 F16J15/16 A61M5/1456 G01N35/1009 A61M5/145 A61M5/31513 F04B13/00 F04B53/143 F04B9/02 A61M5/31515 A61M2205/0222 A61M2207/00 B29L2031/26 B29L2031/7544 F16J15/3208 F16J15/328 A61B17/8822 A61M5/31528 A61M5/31586 F04B7/06 F04B17/03

US class: 1/1 264/250 277/402 417/415 417/437 417/500

Classification Explorer

Cited documents: WOWO2012042226, WOWO2011067559, WOWO2010083147, WOWO2008111863, WOWO2008008974, WOWO2007054233, WOWO2003017020, WOWO1981001445, WO9920327 A2, WO8101445 A1, WO12042226 A2, WO11067559 A1, WO10083147 A1, WO09077734 A2, WO09077734, WO09020682 A2, WO08111863 A1, WO08008974 A2, WO07141058 A1, WO07102836 A1, WO07054233 A1, WO07054233 A1, WO05017356 A1, WO05005829 A1, WO04005714 A1, WO03017020 A1, US9593370 BB, US9551338 BB, US9194504 BB, US8312805 BA, US8162006 BB, US8123756 BB, US7766028 BB, US7682356 BB, US7537437 BB, US7360556 BB, US7111848 BB, US6565535 BB, US6537451 BA, US6254057 BA, US6090081 A, US6067864 A, US6004300 A, US5902276 A, US5800405 A, US5771935 A, US5529280 A, US5496009 A, US4712583 A, US4435173 A, US3799411 A, US3422848 A, US3270771 A, US2857184 A, US2756748 A, US2461211 A, US2019032798 AA, US2017327880 AA, US2017321694 AA, US2015031020 AA, US2014377108 AA, US2014314594 AA, US2014238497 AA, US2013217106 AA, US2011108147 AA, US2010148126 AA, US2010113762 AA, US2010070069 AA, US2010062446 AA, US2009311117 AA, US2008221522 AA, US2008032290 AA, US2008003147 AA, US2007219508 AA, US2007202008 AA, US2007163656 AA, US2006105461 AA, US2006069356 AA, US2005227239 AA, US2003116206 AA, US2002007139 AA, US2001035516 AA, US1955157 A, US10342589 BB, US10054234 BB, US10054234 B2, US10036065 BB, US10036065 B2, JP6319801 A2, JP2009066599, JP2003328420 A2, JP2003235974 A2, JP06319801, GB896056 A, GB840499 A, GB840499 A, GB2474073 A1, GB2447043 A1, GB2443260 A1, FR2947873 A1, EP2165723 A1, EP2163273 B1, EP2163273 B1, EP2163273 A1, EP1946793 A1, EP1640168 A2, EP1197693 A2, EP0934757 A2, EP0925798 B1, EP0925798 B1, EP0925798 A2, EP0247824 A2, EP0086073 A2, EP0015144 A1, DE202007012680 U, DE202007012680, DE202004009831 U, DE202004009831,

DE102009006203 A1

DE102006026220 B4

DE102006026220 B4

DE102006026220 A1

CN201152237 Y, CN201152237 A, CN101224320 A, CN101180091 A, CH344883 A, CH344883,

Forward Citations: WO18007448, US9551338, US2017321694, US10596322, US10438662, US10342589, US10054234, US10036065, CN109707589,

Abstract:
A pump for use in low-profile applications comprises a barrel for holding fluid; and a piston that converts a rotational driving force into a longitudinal driving motion within the barrel. The pump provides space saving advantages by reducing the need for external equipment and mechanisms around the pump for providing actuation or moving the actuating mechanism.

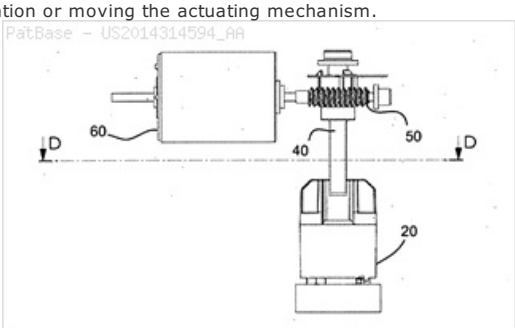

12) Family number: 56396543 (US2014127792A) © PatBase

Title: SEQUENCE SCHEDULING AND SAMPLE DISTRIBUTION TECHNIQUES

Priority: US20120668686 20121105 US20150795285 20150709

Family:

Publication number	Publication date	Application number	Application date
US2014127792 AA	20140508	US20120668686	20121105
US2015309058 AA	20151029	US20150795285	20150709
US9116139 BB	20150825	US20120668686	20121105
US9989544 BB	20180605	US20150795285	20150709

Probable Assignee: ILLUMINA INC

Assignee(s):(std)**:** ILLUMINA INC

Inventor(s):(std)**:** DICKINSON ALEXANDER G ; SHEN MIN JUI RICHARD ; KAIN ROBERT C ; GARCIA FRANCISCO JOSE ; ELTOUKHY HELMY A

Agent(s): FLETCHER YODER PC

International class (IPC 8-9): B01J19/00 G01N35/00 (Advanced/Invention)

CPC: G01N35/0092 B01J19/00 G01N35/00871

US class: 1/1 422/537 435/287.2 700/90

Classification Explorer

Cited documents: WO11067559 A1, WO07010251 A2, WO06064199 A1, WO05065814 A1, US8315817 BB, US8244479 BB, US7371346 BB, US7329860 BB, US7057026 BB, US7001792 BB, US6969488 BB, US6306597 BA, US6172218 BA, US6172218 B1, US5601141 A, US5282149 A, US2011246084 AA, US2010323350 AA, US2010282617 AA, US2010138162 AA, US2010137166 AA, US2010137143 AA, US2009155793 AA, US2009127589 AA, US2009026082 AA, US2008262172 AA, US2007243626 AA, US2007166705 AA, US2006281109 AA, US2006240439 AA, US2006188901 AA, US2005100900 AA,

Forward Citations: WO19027767, US9805407, US2014214579, US10217156, CN107076767, CN107076767,

Abstract:
A technique is disclosed for sample management for use in conjunction with sequencing devices that sequence biological samples, e.g., DNA and RNA. A sequencing device or a network of sequencing devices may be scheduled according to the characteristics of the samples in queue and the capabilities and availability of sequencing devices. Biological samples may be automatically queued and loaded via a sample distribution system. A sample distribution system may be used to reduce operator intervention.

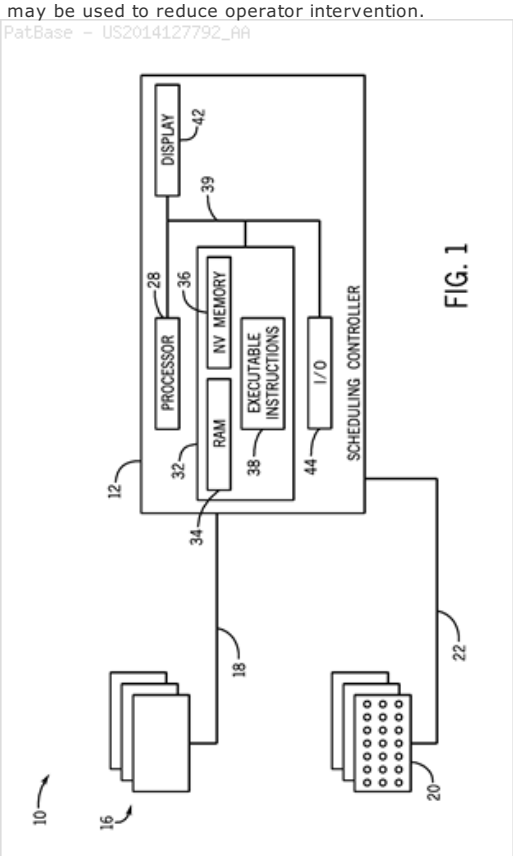

13) Family number: 59063565 (US2015111779A) © PatBase

Title: HIGH SPEED MOLECULAR SENSING WITH NANOPORES

Priority: US20130894577P 20131023 CN201480056841 20141023 US20140521469 20141023 WO2014US61852 20141023 US20190546202 20190820

Family:

Publication number	Publication date	Application number	Application date
CA2926138 AA	20160331	CA20142926138	20141023
CN105723222 A	20160629	CN201480056841	20141023
CN105723222 B	20190122	CN201480056841	20141023
CN109797199 A	20190524	CN201811586278	20141023
EP3060918 A1	20160831	EP20140855081	20141023
EP3060918 A4	20170607	EP20140855081	20141023

EP3060918 B1	20190918	EP20140855081	20141023
JP2017501678 T2	20170119	JP20160524571T	20141023
JP6461943 B2	20190130	JP20160524571T	20141023
US2015111779 AA	20150423	US20140521469	20141023
US2019367977 AA	20191205	US20190546202	20190820
US10421995 BB	20190924	US20140521469	20141023
WO15061509 A1	20150430	WO2014US61852	20141023

Probable Assignee: GENIA TECHNOLOGIES INC

Assignee(s):(std)**:** GENIA TECH INC ; GENIA TECHNOLOGIES INC

Assignee(s): ROCHE SEQUENCING SOLUTIONS INC ; DAVIS RANDALL W

Inventor(s):(std)**:** DAVIS RANDALL ; DAVIS RANDALL W

Agent(s): BORDEN LADNER GERVAIS LLP; TESCHEMACHER ANDREA; YAMAMOTO OSAMU; TAKEUCHI SHIGEO; ONO SHINJIRO; KOBAYASHI YASUSHI; FISHERBROYLES LLP; BREWSTER VICTORIA; PASS JASON M; BOYD VICTORIA L ET AL

Designated states: AE AG AL AM AO AT AU AZ BA BB BE BF BG BH BJ BN BR BW BY BZ CA CF CG CH CI CL CM CN CO CR CU CY CZ DE DK DM DO DZ EC EE EG ES FI FR GA GB GD GE GH GM GN GQ GR GT GW HN HR HU ID IE IL IN IR IS IT JP KE KG KM KN KP KR KZ LA LC LI LK LR LS LT LU LV LY MA MC MD ME MG MK ML MN MR MT MW MX MY MZ NA NE NG NI NL NO NZ OM PA PE PG PH PL PT QA RO RS RU RW SA SC SD SE SG SI SK SL SM SN ST SV SY SZ TD TG TH TJ TM TN TR TT TZ UA UG US UZ VC VN ZA ZM ZW

International class (IPC 8-9): C07H21/02 C12M1/34 C12Q1/00 C12Q1/68 C12Q1/6816 C12Q1/6869 C40B20/00 C40B30/04 G01N27/00 G01N33/483 G01N33/53 G01N33/543 G01N33/566 (Advanced/Invention)

CPC: C12Q2561/125 C12Q2563/143 C12Q2565/631 C12Q2545/114 C12Q1/6816 C12Q1/6869

US class: 506/9

Classification Explorer

Cited documents: WOWO2013191793, WOWO20101109197, WO9746704 A1, WO9732999 A1, WO9321340 A1, WO9106678 A1, WO13191793 A1, WO13154999 A2, WO13123450 A1, WO13123450 A1, WO13109970 A1, WO13109970, WO12121756 A1, WO12088341 A2, WO12088339 A2, WO12067911 A1, WO12067911, WO12009578 A2, WO11106459 A2, WO11097028 A1, WO11067559 A1, WO11038241 A1, WO10109197 A2, WO09054922 A1, WO09051807 A1, WO09020682 A2, WO08124107 A1, WO08102120 A1, WO08069973 A2, WO08034602 A3, WO08034602 A2, WO07146158 A1, WO07127327 A2, WO07062105 A3, WO07062105 A2, WO07053719 A3, WO07053719 A2, WO07053702 A3, WO07053702 A2, WO07002204 A3, WO07002204 A2, WO06020775 A2, WO05084367 A2, WO04072238 A2, WO04071155 A2, WO04055160 A3, WO04055160 A2, WO04007773 A1, WO03020734 A2, WO0229003 A3, WO0229003 A2, WO0222883 A1, WO02079519 A1, WO0148235 A2, WO0056937 A2, WO00056937, US8845880 BB, US8541849 BB, US8324914 BB, US8298792 BB, US8257954 BB, US8252911 BB, US8192961 BB, US8148516 BB, US8137569 BB, US8133672 BB, US8058414 BB, US8058031 BB, US8058030 BB, US8022511 BB, US7989928 BB, US7973146 BB, US7948015 BB, US7947454 BB, US7939270 BB, US7939259 BB, US7924335 BB, US7906371 BB, US7897738 BB, US7883869 BB, US7871777 BB, US7790869 BB, US7777505 BB, US7777013 BB, US7745116 BB, US7727722 BB, US7713698 BB, US7710479 BB, US7635578 BB, US7626379 BB, US7625701 BB, US7622934 BB, US7622279 BB, US7452698 BB, US7446017 BB, US7405281 BB, US7368668 BB, US7361466 BB, US7345159 BB, US7321329 BB, US7279337 BB, US7244602 BB, US7238485 BB, US7233541 BB, US7229799 BB, US7223541 BB, US7189503 BB, US7153672 BA, US7074597 BB, US7057026 BB, US7052839 BB, US7041812 BB, US7033762 BB, US6952651 BB, US6916665 BB, US6891278 BB, US6880346 BA, US6824659 BB, US6800933 BA, US6794177 BB, US6762048 BB, US6746594 BB, US6723513 BB, US6699719 BB, US6686997 BA, US6673615 BB, US6664079 BB, US6627748 BA, US6616895 BB, US6607883 BA, US6485703 BA, US6413792 BA, US6399335 BA, US6399320 BA, US6383749 BB, US6362002 BA, US6321101 BA, US6265193 BA, US6261797 BA, US6255083 BA, US6232103 BA, US6217731 BA, US6210896 BA, US6082115 A, US6046005 A, US6015714 A, US6014213 A, US6012291 A, US5981733 A, US5952180 A, US5939301 A, US5912155 A, US5876936 A, US5869244 A, US5814454 A, US5804386 A, US5795782 A, US5770367 A, US5756355 A, US5576204 A, US5569950 A, US5457342 A, US5308539 A, US5302509 A, US5198543 A, US4859945 A, US4121192 A, US2656508 A, US2015119259 AA, US2014093869 AA, US2014034497 AA, US2014014513 AA, US2013327644 AA, US2013264207 AA, US2013263946 AA, US2013244340 AA, US2013244340 AA, US2013240359 AA, US2013237460 AA, US2013207205 AA, US2013203610 AA, US2013040827 AA, US2013040827 AA, US2013015068 AA, US2012261261 AA, US2012196759 AA, US2012188092 AA, US2012187963 AA, US2012160688 AA, US2012160687 AA, US2012156680 AA, US2012149021 AA, US2012115736 AA, US2012094332 AA, US2012094278 AA, US2012052188 AA, US2012040869 AA, US2012034602 AA, US2011287414 AA, US2011244447 AA, US2011218414 AA, US2011193570 AA, US2011193570 AA, US2011193249 AA, US2011192723 AA, US2011189659 AA, US2011174625 AA, US2011168968 AA, US2011165652 AA, US2011160093 AA, US2011124518 AA, US2011124518 AA, US2011059505 AA, US2011053284 AA, US2011039259 AA, US2011014611 AA, US2011014601 AB, US2011005918 AA, US2010331194 AA, US2010320094 AA, US2010301398 AA, US2010297644 AA, US2010267585 AA, US2010267585 AA, US2010261247 AA, US2010243449 AA, US2010148126 AA, US2010122907 AA, US2010121582 AA, US2010093555 AA, US2010092952 AA, US2010084276 AA, US2010084276, US2010078777 AA, US2010075332 AA, US2010075328 AA, US2010072080 AA, US2010047802 AA, US2010035260 AA, US2010025249 AA, US2010025238 AA, US2009325154 AA, US2009298072 AA, US2009269759 AA, US2009263791 AA, US2009215050 AA, US2009167288 AA, US2009136958 AA, US2009102534 AA, US2009099786 AA, US2009087834 AA, US2009073293 AA, US2009066315 AA, US2009029477 AA, US2008318245 AA, US2008286768 AA, US2008221806 AA, US2008218184 AA, US2008199932 AA, US2008187915 AA, US2008108082 AA, US2008101988 AA, US2007275387 AA, US2007196846 AA, US2007190542 AA, US2007173731 AA, US2007048745 AA, US2007048745 AA, US2006278992 AA, US2006252038 AA, US2006115951 AA, US2006105461 AA, US2006057565 AA, US2005239134 AA, US2005221351 AA, US2005208574 AA, US2005186576 AA, US2005127035 AA, US2005091989 AA, US2005032081 AA, US2004185466 AA, US2004122335 AA, US2003198982 AA, US2003166282 AA, US2003101006 AA, US2003054360 AA, US2003027140 AA, JP2011501806 T2, JP2011501806 T2, JP2011501806, JP2011211905 A2, JP2011211905, JP2006078491 A2, JP2006078491, JP2003527075 T2, JP2003527075 T2, JP2003527075, CN202854093 U, CN202854093 U, CN103298984 A, CN102918166 A,

Forward Citations: WO17050722, WO16059375, JP2017536103, EP3207157,

Abstract:
Described herein are methods and devices for capturing and determining the identity of molecules using nanopores. The molecules can be counted, sorted and/or binned rapidly in a parallel manner using a large number of nanopores (e.g., 132,000 nanopores reading 180 million molecules in 1 hour). This fast capture and reading of a molecule can be used to capture probe molecules or other molecules that have been generated to represent an original, hard to detect molecule or portions of an original molecule. Precise counting of sample molecules or surrogates for sample molecules can occur. The methods and devices described herein can, among other things, replace flow cytometers and other counting instruments (e.g., while providing increased precision and throughput relative to a flow cytometer). In some cases, the devices and methods capture and hold particular molecules or surrogates of molecules in the nanopores and then eject them into clean solution to perform a capture, sorting, and binning function similar to flow cytometers.

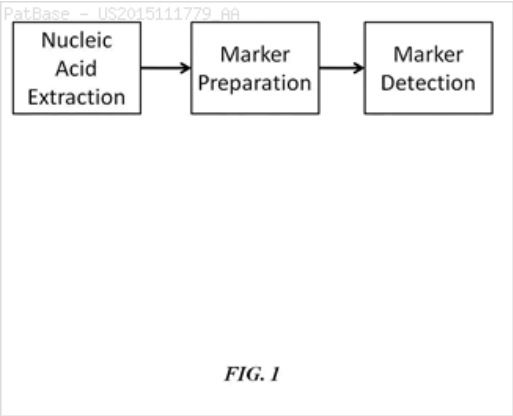

14) Family number: 54908581 (US2013260372A)

© PatBase

Title: INTEGRATED OPTOELECTRONIC READ HEAD AND FLUIDIC CARTRIDGE USEFUL FOR NUCLEIC ACID SEQUENCING

Priority:
US20120619784P 20120403 AU20130243998 20130213 US20130766413 20130213
WO2013US25963 20130213 US20140335117 20140718 IN2014DN07992 20140925
AU20160222420 20160831 US20170594413 20170512 AU20190200400 20190121

Family:

Publication number	Publication date	Application number	Application date
AU2013243998 AA	20141009	AU20130243998	20130213
AU2013243998 BB	20160728	AU20130243998	20130213
AU2016222420 AA	20160922	AU20160222420	20160831
AU2016222420 BB	20190103	AU20160222420	20160831
AU2019200400 AA	20190207	AU20190200400	20190121
BR112014024789 A2	20170620	BR20141124789	20130213
BR112014024789 A8	20170725	BR20141124789	20130213
CA2867665 AA	20140917	CA20132867665	20130213
CN204832037 U	20151202	CN201390000536U	20130213
EP2834622 A1	20150211	EP20130710114	20130213
HK1201582 A1	20150904	HK20150102060	20150302
IL234864 A0	20141231	IL20130234864	20130213
IL234864 A1	20190829	IL20130234864	20130213
IL268205 A0	20190829	IL20130268205	20130213
IN07992DN2014 A	20150501	IN2014DN07992	20140925
IN201918030350 A	20191025	IN201918030350	20190726
JP2015514218 T2	20150518	JP20150504550T	20130213
JP6159391 B2	20170705	JP20150504550T	20130213
KR20150000885 A	20150105	KR20147027974	20130213
MX2014011165 A1	20150319	MX20140011165	20130213
MX337140 B	20160212	MX20140011165	20130213
US2013260372 AA	20131003	US20130766413	20130213
US2014329694 AA	20141106	US20140335117	20140718
US2017246635 AA	20170831	US20170594413	20170512
US9193996 BB	20151124	US20130766413	20130213
US9650669 BB	20170516	US20140335117	20140718
US10549281 BB	20200204	US20170594413	20170512
WO13151622 A1	20131010	WO2013US25963	20130213

Probable Assignee: ILLUMINA INC

Assignee(s):(std)**:** BUERMANN DALE ; CRANE BRYAN ; HAGE MATTHEW ; HARRIS JASON ; ILLUMINA INC ; HONG STANLEY S ; WANG MARK ; MOON JOHN A ; NIBBE MARK J

Assignee(s): ILLUMINA INC5200 ILLUMINA WAYSAN DIEGOCA92122US

Inventor(s):(std)**:** MARK J NIBBE ; MARK WANG ; STANLEY S HONG ; MATTHEW HAGE ; JASON HARRIS ; DALE BUERMANN ; BRYAN CRANE ; HAGE MATTHEW HANS ; J A MOON ; BUERMANN DALE ; HONG STANLEY S ; HARRIS JASON ; HAGE MATTHEW ; MOON JOHN A ; WANG MARK ; CRANE BRYAN ; NIBBE MARK J

Inventor(s): STANLEY SHONG ; JAMOON ; CRANE BRYANUS ; NIBBE MARK JUS ; WANG MARKUS ; HAGE MATTHEWUS ; MOON JOHN AUS ; HARRIS JASONUS ; HONG STANLEY SUS ; BUERMANN DALEUS ; JOHN A MOON

Agent(s): WRAYS; WRAYS PTY LTD; GOWLING LAFLEUR HENDERSON LLP; RUTHERFORD CLAIRE; IT AND T INTELLECTUAL PROPERTY; GOLD PATENTS LTD; JOHN T; ILLUMINA INC; MURPHY JOHN T ET AL

Designated states: AE AG AL AM AO AT AU AZ BA BB BE BF BG BH BJ BN BR BW BY BZ CA CF CG CH CI CL CM CN CO CR CU CY CZ DE DK DM DO DZ EC EE EG ES FI FR GA GB GD GE GH GM GN GQ GR GT GW HN HR HU ID IE IL IN IS IT JP KE KG KM KN KP KR KZ LA LC LI LK LR LS LT LU LV LY MA MC MD ME MG MK ML MN MR MT MW MX MY MZ NA NE NG NI NL NO NZ OM PA PE PG PH PL PT QA RO RS RU RW SC SD SE SG SI SK SL SM SN ST SV SY SZ TD TG TH TJ TM TN TR TT TZ UA UG US UZ VC VN ZA ZM ZW

International class (IPC 8-9): B01L3/00 C12M1/00 C12M1/34 C12Q1/68 C12Q1/6869 C12Q1/6874 G01N G01N21/03 G01N21/05 G01N21/64 G01N35/08 G01N37/00 (Advanced/Invention);
B01L3/00 G01N21/03 G01N21/05 (Advanced/Non-invention);
G01N (Subclass/Invention)

CPC: B01L2200/16 B01L2300/0877 B01L2400/0487 B01L2400/06 B01L3/502715 B01L3/527 C12Q1/6874 G01N21/6428 G01N21/6486 G01N2021/0307 G01N2021/0325 G01N2021/058 G01N2021/6417 G01N2021/6441 G01N2021/6482 C12Q1/6869

US class: 1/1 422/501 435/287.2 435/6.1 506/2

Classification Explorer

Cited documents: WO9106678 A1, WO12042226 A2, WO12027586 A2, WO12027586, WO11067559 A1, WO08050254 A1, WO08050254, WO07123744 A2, WO05010145 A2, WO04018497 A2, WO0240874 A1, WO0123913 A2, WO0063437 A2, US9193996 BB, US8039817 BB, US7998437 BB, US7864369 BB, US7835871 BB, US7834911 BB, US7622294 BB, US7547874 BB, US7482566 BB, US7405281 BB, US7388714 BB, US7330574 BB, US7329860 BB, US7329492 BB, US7315019 BB, US7211414 BB, US7193775 BB, US7143787 BA, US7130115 BB, US7116437 BB, US7115400 BA, US7057026 BB, US7034317 BB, US6982166 BB, US6950241 BA, US6859570 BB, US6770441 BB, US6603546 BA, US6424404 BA, US6374684 BA, US6355431 BA, US6326612 BA, US6320174 BA, US6266459 BA, US6176442 BA, US6012488 A, US5803117 A, US5641658 A, US4160263 A, US2012270305 AA, US201161538294 P, US2011246084 AA, US2011224574 AA, US2011224574, US2011201099 AA, US2011165025 AA, US2011059865 AA, US2011017902 AA, US2011001036 AA, US2011001036, US2010157086 AA, US2010157086, US2009272914 AA, US2009142846 AA, US2008262747 AA, US2008262172 AA, US2008254467 AA, US2008151363 AA, US2008151363, US2008125330 AA, US2008117425 AA, US2008108082 AA, US2008088918 AA, US2008014576 AA, US2008013092 AA, US2008009420 AA, US2007280855 AA, US2007128624 AA, US2007099208 AA, US2006223169 AA, US2006177844 AA, US2006017784 AA, US2005221373 AA, US2005221281 AA, US2005181394 AA, US2005130173 AA, US2005127271 AA, US2005064460 AA, US2004224317 AA, US2004096853 AA, US2004023284 AA, US2004002090 AA, US2003215821 AA, US2003199081 AA, US2003108900 AA, US2003091477 AA, US2003036855 AA, US2002062747 AA, US2002055100 AA, JP2010507828 T2, JP2010507828 T2, JP2010507828, JP2007108154 A2, JP2007108154, JP2002507763 T2, JP2002507763 T2, JP2002507763, EP1325298 A1,

Forward Citations: WO20047010, WO20047007, WO20047005, WO20047004, WO20047002, WO20008972, WO19203986, WO19195225, WO19116295, WO19116294, WO19035897, WO19027767, WO18236631, WO18226708, WO18197945, WO18183745, WO18136416, WO18129314, WO18128847, WO18128846, WO18128845, WO18128844, WO18128843, WO18064116, WO18018008, WO17165852, WO17123533, WO17110557, WO17019456, WO16196358, WO16073237, WO16061484, WO16057950, WO16040602, WO15183871, WO15175832, WO15084985, WO15031596, WO15021228, WO14144569, USD825078, USD819829, USD766761, US9976174, US9958465, US9835640, US9827565, US9777325, US9650669, US9591268, US9554095, US9410977, US9193998, US9146248, US2015125053, US2014329694, US10596569, US10591503, US10590464, US10584374, US10576471, US10570447, US10549281, US10540783, US10508305, US10501796, US10427155, US10393613, US10351846, US10249038, US10232369, US10118173, US10006083, RU2713085, RU2682546, NL2021147, JP6567685, JP2020008405, JP2019508669, JP2018518657, JP2018513966, JP2017522546, JP2017522545, JP2017112934, ITUA20162851, EP3469380, EP3304077, EP3303584, EP3280819, EP3271073, EP3215616, EP3039409, EP2971099, DE102018212489, CN106536055, CN106536055, CN106459869,

Abstract:
A detection apparatus having a read head including a plurality of microfluorometers positioned to simultaneously acquire a plurality of the wide-field images in a common plane; and (b) a translation stage configured to move the read head along a substrate that is in the common plane. The substrate can be a flow cell that is included in a **cartridge**, the **cartridge** also including a housing for (i) a sample reservoir; (ii) a fluidic line between the sample reservoir and the flow cell; (iii) several reagent reservoirs in fluid communication with the flow cell, (iv) at least one valve configured to mediate fluid communication between the reservoirs and the flow cell; and (v) at least one pressure source configured to move liquids from the reservoirs to the flow cell. The detection apparatus and **cartridge** can be used together or independent of each other.

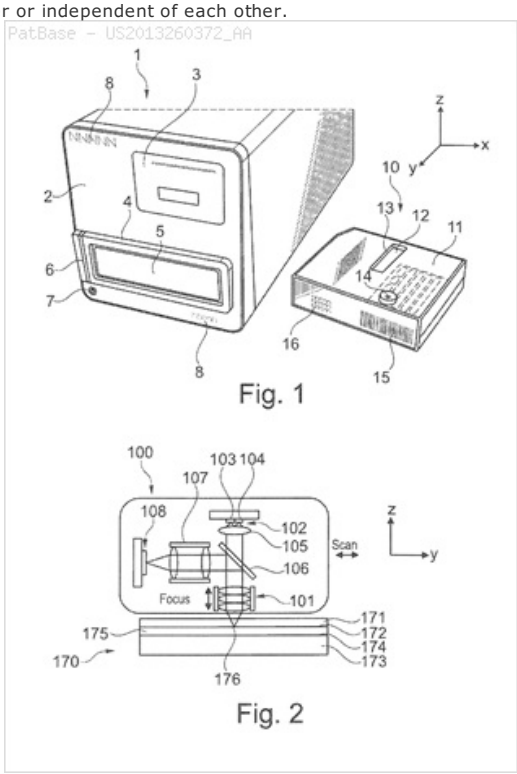

15) Family number: 55051584 (US2015119268A)

Title: APPARATUS WITH HETEROGENEOUS PROCESSING MODULES

Priority: US20120639820P 20120427 AU20130251488 20130425 US20130396035 20130425 WO2013US38210 20130425 US20140396035 20141021 US20180155723 20181009 AU20190200778 20190205

Family:

Publication number	Publication date	Application number	Application date
AU2013251488 AA	20131031	AU20130251488	20130425
AU2019200778 AA	20190221	AU20190200778	20190205
BR112014026735 A2	20170627	BR20141126735	20130425

CA2871128 AA	20141021	CA20132871128	20130425
CN104321442 A	20150128	CN201380022244	20130425
CN104321442 B	20180605	CN201380022244	20130425
EA031833 B1	20190228	EA20140091979	20130425
EA201491979 A1	20150430	EA20140091979	20130425
EP2841600 A1	20150304	EP20130781929	20130425
EP2841600 A4	20151118	EP20130781929	20130425
HK1206811 A1	20160115	HK20150107164	20150727
HK1206811 B	20190726	HK20150107164	20150727
IN09340DN2014 A	20150710	IN2014DN09340	20141106
JP2015523849 T2	20150820	JP20150509140T	20130425
JP6197030 B2	20170913	JP20150509140T	20130425
KR20150014469 A	20150206	KR20147033279	20130425
MX2014012831 A1	20151022	MX20140012831	20130425
MX357318 B	20180704	MX20140012831	20130425
NZ701221 A	20161223	NZ20130701221	20130425
US2015119268 AA	20150430	US20130396035	20130425
US2019041300 AA	20190207	US20180155723	20181009
US10132728 BB	20181120	US20130396035	20130425
WO13163424 A1	20131031	WO2013US38210	20130425
ZA201407770 A	20180131	ZA20140007770	20130425

Probable Assignee: CEPHEID

Assignee(s):(std)**:** CEPHEID

Assignee(s): CEPHEID904 CARIBBEAN DRIVESUNNYVALECA94089US ; BISHOP JOHN L

Inventor(s):(std)**:** BISHOP JOHN L ; BISHOP JOHN L L ; JOHN L BISHOP

Inventor(s): BISHOP JOHN LUS

Agent(s): CULLENS PATENT AND TRADE MARK ATTORNEYS; CULLENS PTY LTD; SPRUSON AND FERGUSON; BENOIT AND COTE INC; WEBSTER JEREMY MARK; INSIGHT HK INTELLECTUAL PROPERTY LTD; KILPATRICK TOWNSEND AND STOCKTON LLP; WILLINK CHRISTOPHER L ET AL

Designated states: AE AG AL AM AO AT AU AZ BA BB BE BF BG BH BJ BN BR BW BY BZ CA CF CG CH CI CL CM CN CO CR CU CY CZ DE DK DM DO DZ EC EE EG ES FI FR GA GB GD GE GH GM GN GQ GR GT GW HN HR HU ID IE IL IN IS IT JP KE KG KM KN KP KR KZ LA LC LI LK LR LS LT LU LV LY MA MC MD ME MG MK ML MN MR MT MW MX MY MZ NA NE NG NI NL NO NZ OM PA PE PG PH PL PT QA RO RS RU RW SC SD SE SG SI SK SL SM SN ST SV SY SZ TD TG TH TJ TM TN TR TT TZ UA UG US UZ VC VN ZA ZM ZW

International class (IPC 8-9): B01L3/00 C12M1/00 C12M1/38 C12Q C12Q1/68 C12Q1/6806 C12Q1/6876 C40B40/04 G01N G01N1/31 G01N33/48 G01N33/50 G01N33/53 G01N33/543 G01N33/68 G01N35/00 G01N35/02 G01N37/00 (Advanced/Invention);
C12Q G01N (Subclass/Invention)

CPC: G01N35/00 G01N35/00871 C12Q1/6806 C12Q1/6876 C12Q2600/16 G01N1/31 G01N33/6845

US class: 1/1 435/287.1 435/287.2 435/29 435/6.1 435/6.11 435/6.12 435/7.1 506/39 506/9

Classification Explorer

Cited documents: WO12012779 A2, WO11067559 A1, WO08012104 A2, WO0218902 A1, WO0073412 A2, WO0072970 A1, US6776961 BB, US6739531 BB, US6660228 BA, US6586176 BA, US6391541 BA, US6168948 BA, US6066243 A, US5928952 A, US5856174 A, US4169125 A, US2013079236 AA, US2011091357 AA, US2010129827 AA, US2009041626 AA, US2008200343 AA, US2008200343, US2008153096 AA, US2002177135 AA, US2002042125 AA, JP2007187677 A2, JP2007187677, JP2005261298 A2, JP2005261298, JP2001527220 T2, JP2001527220 T2, JP2001527220, GB1561042 A, EP1305638 B1, CN1297529 A, CN101370622 A,

Forward Citations: WO18111935, WO18094283, US2014098252, JP2018502309,

Abstract:
A biological sample processing apparatus having an enclosure. A plurality of sample processing modules are held by the enclosure. Each sample processing module is configured to hold a removable sample **cartridge** and to only perform sample processing on a sample within the corresponding removable sample **cartridge**. Each sample processing module is configured to perform at least one of a plurality of testing processes on the sample within the removable sample **cartridge**. At least one module in the apparatus is configured to perform nucleic acid amplification and detection.

16) Family number: 54976660 (US2013274148A)

Title: PORTABLE GENETIC DETECTION AND ANALYSIS SYSTEM AND METHOD

Priority: US20120622773P 20120411 US20130790623 20130308 US20160209351 20160713 US20190540769 20190814

Family:

Publication number	Publication date	Application number	Application date
US2013274148 AA	20131017	US20130790623	20130308
US2016319327 AA	20161103	US20160209351	20160713

US2019367965 AA	20191205	US20190540769	20190814
US10428367 BB	20191001	US20160209351	20160713

Probable Assignee: ILLUMINA INC

Assignee(s):(std)**:** ILLUMINA INC

Inventor(s):(std)**:** MOON JOHN A ; ELTOUKHY HELMY A ; KAIN ROBERT C ; SHEN MIN JUI RICHARD

Agent(s): FLETCHER YODER PC

International class (IPC 8-9): B01L3/00 C12Q1/68 C12Q1/6837 C12Q1/6869 G01N33/487 (Advanced/Invention); G01N35/00 (Advanced/Non-invention)

CPC: B01L3/5027 G01N33/48721 G01N33/4875 G01N33/48792 G01N2035/00881 B01L3/502715 B01L2200/10 B01L2300/023 B01L2300/024 B01L2300/027 B01L2300/0636 C12Q1/68 C12Q1/6837 C12Q1/6869

US class: 1/1 435/287.2 506/38 506/39 506/4

Classification Explorer

Cited documents: WOWO9106678, WOWO8910977, WOWO2011067559, WOWO2010077859, WOWO2010034018, WOWO2007123744, WOWO2005010145, WOWO2004018497, WO9106678 A1, WO8910977 A1, WO11067559 A1, WO10077859 A2, WO10034018 A2, WO07123744 A2, WO05010145 A2, WO04018497 A2, US9651519 BB, US8315817 BB, US7998436 BB, US7815871 BB, US7595883 BA, US7405281 BB, US7329860 BB, US7329492 BB, US7315019 BB, US7244559 BB, US7211414 BB, US7115400 BA, US7057026 BB, US7001792 BB, US6911132 BB, US6627067 BA, US6413792 BA, US6274320 BA, US6258568 BA, US6210891 BA, US5750341 A, US5641658 A, US5599675 A, US2013331992 AA, US2013217106 AA, US2012322679 AA, US2012270305 AA, US2012020537 AA, US2011072914 AA, US2010294663 AA, US2010224494 AA, US2010187115 AA, US2010137143 AA, US2010111768 AA, US2010048410 AA, US2010009871 AA, US2009150084 AA, US2009127589 AA, US2009100030 AA, US2009026082 AA, US2008182757 AA, US2008108082 AA, US2008009420 AA, US2007128624 AA, US2007099208 AA, US2005191698 AA, US2005130173 AA, US2005064460 AA, US2005043894 AA, US2004096853 AA, US2004002090 AA, US2002189946 AA, US2002055100 AA,

Forward Citations: WO17050721, WO14144569, US10508305, US10102338, JP6644329, JP2019527819, JP2018531376, JP2017096677, EP2971099, CN108369221, CN108369221,

Abstract:
A portable detector is disclosed for detecting certain analytes of interest, such as genetic material (e.g., nucleic acids). The detector includes a reading component for the detection of the analytes, and control circuitry for controlling operation of the reading component. Processing circuitry may be included to perform both primary analysis of acquired data, and where desired, secondary analysis. Where desired, some or all of the computationally intensive tasks may be off-loaded to enhance the portability and speed of the device. The device may incorporate various types of interface, technologies for reading and analysis, positioning system interfaces, and so forth. A number of exemplary use cases and methods are also disclosed.

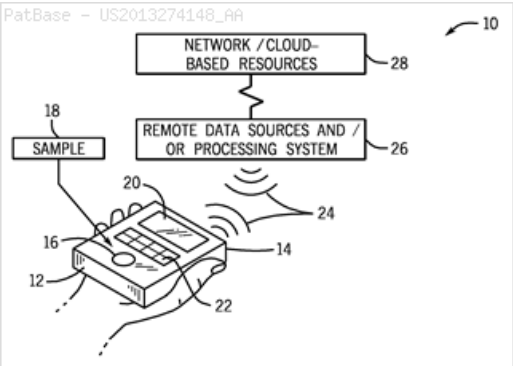

17) Family number: 44532664 (US2012322679A)

© PatBase

Title: BIOCHEMICAL ANALYSIS INSTRUMENT

Priority:

US20090265488P	20091201	GB20090022743	20091231	GB20100016614	20101001
EP20100793017	20101201	US20100512937	20101201	WO2010GB02206	20101201
US20120512937	20120906	US20140302303	20140611	US20150812510	20150729
US20170491450	20170419	US20180170620	20181025	US20190297555	20190308
US20190374703	20190403				

Family:

Publication number	Publication date	Application number	Application date
AU2010326349 AA	20110609	AU20100326349	20101201
AU2010326349 AA	20120607	AU20100326349	20101201
AU2010326349 AA	20110609	AU20100326349	20101201
AU2010326349 AA	20120607	AU20100326349	20101201
AU2010326349 AA	20110609	AU20100326349	20101201
AU2010326349 BB	20151029	AU20100326349	20101201
BR112012013074 A2	20161004	BR20121113074	20101201
BR112012013074 B1	20180918	BR20121113074	20101201
CA2781581 AA	20110609	CA20102781581	20101201
CA2781581 C	20180306	CA20102781581	20101201
CN102741430 A	20121017	CN201080062958	20101201
CN102741430 B	20160713	CN201080062958	20101201
DE602010039833 D1	20170309	DE201060039833T	20101201
EP2507387 A1	20121010	EP20100793017	20101201
EP2507387 B1	20170125	EP20100793017	20101201
GB200922743 A0	20100217	GB20090022743	20091231
GB201016614 A0	20101117	GB20100016614	20101001
IN04588DN2012 A	20151127	IN2012DN04588	20120524
JP2013512447 T2	20130411	JP20120541570T	20101201
JP5873023 B2	20160301	JP20120541570T	20101201
KR101814056 B1	20180102	KR20127017119	20101201

KR20120107105 A	20120928	KR20127017119	20101201
US2012322679 AA	20121220	US20100512937	20101201
US2014296083 AA	20141002	US20140302303	20140611
US2015346149 AA	20151203	US20150812510	20150729
US2017350859 AA	20171207	US20170491450	20170419
US2019064109 AA	20190228	US20180170620	20181025
US2019204267 AA	20190704	US20190297555	20190308
US2019265193 AA	20190829	US20190374703	20190403
US9127313 BB	20150908	US20100512937	20101201
US9651519 BB	20170516	US20150812510	20150729
US10386330 BB	20190820	US20190297555	20190308
WO11067559 A1	20110609	WO2010GB02206	20101201

Probable Assignee: OXFORD NANOPORE TECHNOLOGIES LTD

Assignee(s):(std)**:** BROWN CLIVE GAVIN ; OXFORD NANOPORE TECH LTD ; OXFORD NANOPORE TECHNOLOGIES LTD ; WILLCOCKS JAMES PETER

Assignee(s): OXFORD NANOPORE TECHNOLOGIES LIMITED

Inventor(s):(std)**:** JAMES PETER WILLCOCKS ; CLIVE GAVIN BROWN ; GAVIN BROWN CLIVE ; PETER WILLCOCKS JAMES ; BROWN CLIVE GAVIN ; WILLCOCKS JAMES PETER

Inventor(s): BROWN CLIVE ; WILLCOCKS JAMES

Agent(s): DAVIES COLLISON CAVE; DAVIES COLLISON CAVE PTY LTD; OSLER HOSKIN AND HARCOURT LLP; KRAUS AND WEISERT PATENTANWAELTE PARTGMBB; MERRYWEATHER COLIN HENRY; ASAMURA PATENT OFFICE PC; ASAMURA KIYOSHI; ASAMURA HAJIME; ANTHONY A; JANE E; NELSON MULLINS RILEY AND SCARBOROUGH LLP; WOLF GREENFIELD AND SACKS PC

Designated states: AE AG AL AM AO AT AU AZ BA BB BE BF BG BH BJ BR BW BY BZ CA CF CG CH CI CL CM CN CO CR CU CY CZ DE DK DM DO DZ EC EE EG ES FI FR GA GB GD GE GH GM GN GQ GR GT GW HN HR HU ID IE IL IN IS IT JP KE KG KM KN KP KR KZ LA LC LI LK LR LS LT LU LV LY MA MC MD ME MG MK ML MN MR MT MW MX MY MZ NA NE NG NI NL NO NZ OM PE PG PH PL PT RO RS RU SC SD SE SG SI SK SL SM SN ST SV SY SZ TD TG TH TJ TM TN TR TT TZ UA UG US UZ VC VN ZA ZM ZW

International class (IPC 8-9): C12M1/34 C12Q1/68 C12Q1/6869 C40B30/04 C40B60/12 G01N15/06 G01N15/14 G01N27/27 G01N27/28 G01N27/30 G01N27/416 G01N27/447 G01N33/00 G01N33/48 G01N33/487 G01N33/50 G01N35/00 G06F19/20 G06F19/22 G06F19/28 (Advanced/Invention); B82Y30/00 B82Y99/00 (Advanced/Non-invention)

International class (IPC 1-7): C12Q1/68 G01N33/487

CPC: G01N15/1463 G16B30/00 C12Q1/6869 G01N33/48721 G01N15/1459 G01N27/44756

European class: G01N33/487B5

US class: 1/1 204/451 204/602 506/13 506/2 506/38 506/39 506/9 977/781 977/902

Classification Explorer

Cited documents: WOWO2011067559, WOWO2010122293, WOWO2008102120, WOWO1998001758, WO9905167 A1, WO9905167 A1, WO9835012 A2, WO9835012 A1, WO9801758 A1, WO9720203 A1, WO9720203 A1, WO8903432 A1, WO8903432 A1, WO20081021, WO11067559 A1, WO10122293 A1, WO10122293, WO10062913 A2, WO09077734 A2, WO09077734, WO09045472 A1, WO09045472, WO09044170 A1, WO09044170, WO09022152 A1, WO09022152 A1, WO08102121 A1, WO08102121, WO08102120 A1, WO08102120 A1, WO08076406 A2, WO08076406, WO08042018 A2, WO08042018, WO07127327 A2, WO07127327, WO07084163 A2, WO07084163, WO07057668 A1, WO07057668, WO06028508 A2, WO06028508, WO05124888 A1, WO05124888, WO05061373 A1, WO05061373, WO05035437 A2, WO05035437, WO05017025 A2, WO05017025, WO05000739 A1, WO05000739, WO05000732 A1, WO05000732, WO04077503 A2, WO04077503, WO03095669 A1, WO03095669, WO03003446 A2, WO03003446, WO03000920 A2, WO03000920, WO0229402 A2, WO0225934 A2, WO0225934 A2, WO02025934, WO0159684 A2, WO0159684, WO0105945 A2, WO0079257 A1, WO0079257, WO0078668 A1, WO0078668, US9738929 BB, US9678056 BB, US9651519 BB, US9556480 BB, US9546400 BB, US9127313 BB, US9057102 BB, US8828208 BB, US8461854 BB, US7869508 P, US7868708 P, US7507575 BB, US7501279 BB, US7476503 BB, US7476503, US7329492 BB, US7329492, US7258838 BB, US7258838, US7189503 BB, US7189503, US7170050 BB, US7170050, US7155344 BA, US7001792 BB, US7001792, US6927070 BA, US6927070, US6627067 BA, US6627067, US6426231 BA, US6426231, US6413792 BA, US6413792, US6355420 BA, US6355420, US6015714 A, US6015714 A, US5795782 A, US5795782 A, US5694495 A, US5386373 A, US5368712 A, US5368712 A, US4962037 A, US4962037 A, US4659920 A, US2019064109 AA, US2017350859 AA, US2016040230 AA, US2015346149 AA, US2014346059 AA, US2014329693 AA, US2014308661 AA, US2014296089 AA, US2014296083 AA, US2013078624 AA, US2013071837 AA, US2012322679 AA, US2011287414 AA, US2011120871 AA, US2011053284 AA, US2010331194 AA, US2010276588 AA, US2010196203 AA, US2010035260 AA, US2009298072 AA, US2009283412 AA, US2009283412 AA, US2009167288 AA, US2009167288 AA, US2009029477 AA, US2009029477 AA, US2008069739 AA, US2008069739 AA, US2007218471 AA, US2007218471 AA, US2007099191 AA, US2007095671 AA, US2006121624 AA, US2006105461 AA, US2006105461 AA, US2006019247 AA, US2005127035 AA, US2005006372 AA, US2004055901 AA, US2004040868 AA, US2003096423 AA, US2003096418 AA, US2003070923 AA, US17072909 P, JP3668799 B2, JP3668799 B2, JP3668799 A2, JP1062426, JP10062426, JP10062426, GB2430763 A1, GB2430763 A1, GB2009001690, GB2009001679, GB0812697, GB0812693, EP1965210 A1, EP1956367 A1, EP1956367, EP1192453 A1, EP1192453,

Forward Citations: WO20049293, WO20043653, WO20025974, WO20025909, WO20016573, WO20002516, WO19234432, WO19227013, WO19224558, WO19171852, WO19149626, WO18211241, WO18203071, WO18146491, WO18128846, WO18128845, WO18100370, WO18073604, WO18071467, WO18060740, WO18011603, WO17203269, WO17174990, WO17149318, WO17149317, WO17149316, WO17098322, WO17050721, WO17050720, WO16205310, WO16132124, WO16132123, WO16059375, WO16059363, WO16057829, WO16055778, WO16055777, WO15150787, WO15110813, WO15056028, WO15055981, WO14190322, WO14135838, WO14123716, WO14122467, WO14072703, WO14064444, WO14013262, WO14013260, WO14013259, WO13163424, WO13153359, WO13130635, WO13123379, WO13121224, WO13121201, WO13098562, WO13098561, WO13057495, WO13041878, WO13038163, WO13008010, WO12164270, WO12042226, US9995728, US9989544, US9957560, US9927398, US9903820, US9885079, US9885078, US9869655, US9862997, US9797013, US9797009, US9777049, US9759711, US9758823, US9751915, US9678055, US9651539, US9651519, US9650669, US9624537, US9617595, US9617593, US9617591, US9605309, US9605307, US9593370, US9581563, US9567630, US9551697, US9551338, US9551023, US9494554, US9444880, US9377437, US9322062, US9290805, US9279153, US9193996, US9121059, US9116139, US9041420, US8845880, US8771491, US2016007893, US2015346149, US2015094214, US10570440, US10549281, US10549274, US10526647, US10514378, US10501767, US10488365, US10480026, US10472673, US10456993, US10443097, US10438662, US10428367, US10421995, US10416117, US10400278, US10400014, US10393700, US10392658, US10386330, US10385382, US10381105, US10371692, US10344327, US10343350, US10343160, US10342589, US10338056, US10337060, US10280411, US10266885, US10246741, US10223502, US10221450, US10215768, US10208342, US10202645, US10196688, US10191010, US10167503, US10156541, US10132728, US10131943, US10102338, US10101315, US10081835, US10077471, US10059988, US10054234,

US10036065, US10012637, US10006905, TWI665553, RU2713085, KR20160142358, KR101873143, JP6246855, JP6246741, JP6226869, JP6063062, JP2016504593, JP2016164576, JP2015510129, JP2014534812, GB2496019, EP3575410, EP3269825, EP3269825, EP3207157, EP3207152, EP3192804, EP3192804, EP3126516, EP3126515, EP3108010, EP3097210, EP3033435, EP3004385, EP2987870, EP2987870, EP2964779, EP2953524, EP2917366, EP2911771, EP2895618, EP2875154, EP2875152, EP2836506, EP2820156, EP2820156, EP2814939, EP2798084, EP2798083, EP2768977, EP2758545, EP2715343, EP2622343, EA031833, CN109844528, CN108369221, CN108369221, CN108351340, CN106226510, CN104903715, CN104903715, CN104321442, AU2014215659,

Abstract:
An analysis instrument comprises plural modules connected together over a data network, each module comprising an analysis apparatus operable to perform biochemical analysis of a sample. Each module comprises a control unit that controls the operation of the analysis apparatus. The control units are addressable to select an arbitrary number of modules to operate as a cluster for performing a common biochemical analysis. The control units communicate over the data network, repeatedly during the performance of the common biochemical analysis, to determine the operation of the analysis apparatus of each module required to meet the global performance targets, on the basis of measures of performance derived from the output data produced by the modules. The arrangement of the instrument as modules interacting in this manner provides a scalable analysis instrument.

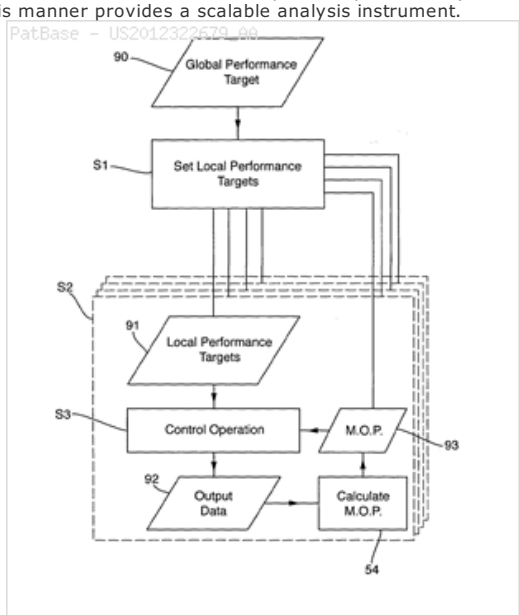

18) Family number: 65762685 (US2018187259A)

© PatBase

Title: SYSTEM AND METHODS FOR SELECTIVE EFFLUENT COLLECTION

Priority: US20170442742P 20170105 GB20170004766 20170324 US20170841082 20171213 WO2017US67841 20171221

Family:

Publication number	Publication date	Application number	Application date
AU2017390261 AA	20181122	AU20170390261	20171221
BR112018074169 A2	20190306	BR20181174169	20171221
CA3022690 AA	20181030	CA20173022690	20171221
CN109313213 A	20190205	CN201780038333	20171221
EP3469381 A1	20190417	EP20170890028	20171221
EP3469381 A4	20191225	EP20170890028	20171221
GB201704766 A0	20170510	GB20170004766	20170324
IL262682 A0	20181231	IL20170262682	20171221
IN201817045558 A	20190621	IN201817045558	20181203
KR20190095108 A	20190814	KR20187036964	20171221
RU2713085 C1	20200203	RU20180144536	20171221
SG11201811314R A1	20190130	SG20181111314	20171221
TW201830187 A	20180816	TW20170145538	20171225
US2018187259 AA	20180705	US20170841082	20171213
WO18128846 A1	20180712	WO2017US67841	20171221

Probable Assignee: ILLUMINA INC

Assignee(s):(std)**:** CAPPA KEVIN JAMES ; DREWS BRADLEY KENT ; HAGE MATTHEW WILLIAM ; ILLUMIA INC ; ILLUMINA INC

Inventor(s):(std)**:** BRADLEY KENT DREWS ; CAPPA KEVIN ; DREWS BRADLEY KENT ; CAPPA KEVIN JAMES ; HAGE MATTHEW ; DRYUZ BREDLI KENT ; HAGE MATTHEW WILLIAM ; KEVIN JAMES CAPPA ; MATTHEW WILLIAM HAGE ; KAPPA KEVIN DZHEJMS ; KHEJG METTYU UILYAM

Agent(s): WRAYS PTY LTD; BERESKIN AND PARR LLP SENCRL SRL; MURGITROYD AND CO; ARS PATENT; SCHOLZ CHRISTIAN D ET AL

Designated states: AE AG AL AM AO AT AU AZ BA BB BE BF BG BH BJ BN BR BW BY BZ CA CF CG CH CI CL CM CN CO CR CU CY CZ DE DJ DK DM DO DZ EC EE EG ES FI FR GA GB GD GE GH GM GN GQ GR GT GW HN HR HU ID IE IL IN IR IS IT JO JP KE KG KH KM KN KP KR KW KZ LA LC LI LK LR LS LT LU LV LY MA MC MD ME MG MK ML MN MR MT MW MX MY MZ NA NE NG NI NL NO NZ OM PA PE PG PH PL PT QA RO RS RU RW SA SC SD SE SG SI SK SL SM SN ST SV SY SZ TD TG TH TJ TM TN TR TT TZ UA UG US UZ VC VN ZA ZM ZW

International class (IPC 8-9): B01L3/00 C12Q C12Q1/6874 G01N35/00 G01N35/02 G01N35/08 G01N35/10 G05D7/06 (Advanced/Invention); C12Q (Subclass/Invention)

International class (IPC 1-7): B01L3/00 G01N35/00 G01N35/02 G01N35/08 G01N35/10

CPC: G01N35/1009 B01L3/50273 G01N35/00029 G01N35/08 B01L2400/0475 G01N2035/00158 B01L3/502 B01L2200/143 B01L2200/16 B01L2300/0877 C12Q1/6869 C12Q1/6874 B01L2200/0605 B01L2300/0861 B01L2400/06

US class: 1/1 506/2

Classification Explorer

Cited documents: WO18128844 A1, US2016047805 AA, US2015361488 AA, US2015346149 AA, US2013260372 AA, US2010300895 AA, US2010111768 AA,

Abstract:
A system may include a flow cell through which a plurality of reagents may be pumped during a genetic sequencing operation, an effluent line that, in operation, is to conduct a used reagent, a used reagent valve to receive the used reagent from the effluent line and controllable to select one of a plurality of disposal paths for the used reagent, and control circuitry coupled to the used reagent valve that, in operation, is to control the used reagent valve to select a desired one of the disposal paths depending upon which reagent is being pumped though the flow cell.

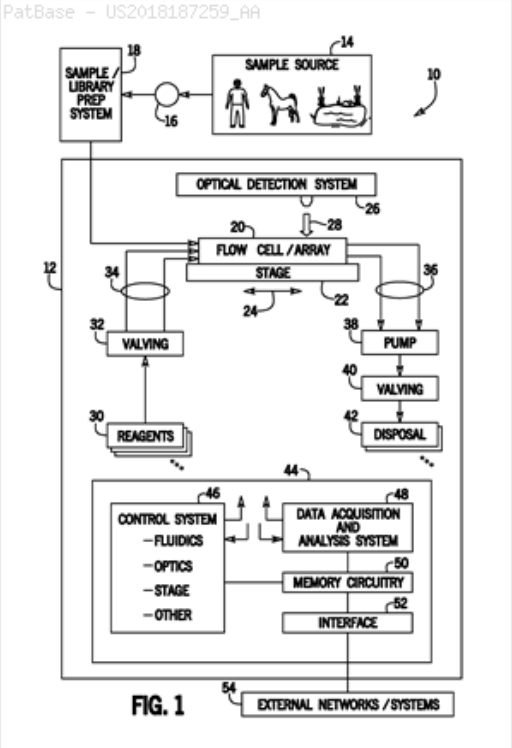

19) Family number: 55376726 (US2014034497A)

© PatBase

Title: CHIP SET-UP AND HIGH-ACCURACY NUCLEIC ACID SEQUENCING

Priority: US20120660537P 20120615 US20120660543P 20120615 US20130771031P 20130228 US20130918626 20130614 WO2013US46012 20130614

Family:

Publication number	Publication date	Application number	Application date
CA2876095 AA	20141208	CA20132876095	20130614
CN104350162 A	20150211	CN201380030786	20130614
EP2861768 A1	20150422	EP20130804403	20130614
EP2861768 A4	20160302	EP20130804403	20130614
GB201402449 A0	20140326	GB20140002449	20130614
GB2510719 A1	20140813	GB20140002449	20130614
JP2015525077 T2	20150903	JP20150517465T	20130614
US2014034497 AA	20140206	US20130918626	20130614
US9494554 BB	20161115	US20130918626	20130614
WO13188841 A1	20131219	WO2013US46012	20130614

Probable Assignee: GENIA TECHNOLOGIES INC

Assignee(s):(std)**:** BIBILLO ARKADIUSZ ; CHEN ROGER ; DAVIS RANDALL ; DEIERLING KEVIN ; GENIA TECHNOLOGIES INC ; GENIA TECH INC

Assignee(s): ROCHE SEQUENCING SOLUTIONS INC ; GLENVIEW CAPITAL MASTER FUND LTD ; GLENVIEW CAPITAL OPPORTUNITY FUND LP ; GLENVIEW CAPITAL PARTNERS LP ; GLENVIEW INSTITUTIONAL PARTNERS LP ; GLENVIEW OFFSHORE OPPORTUNITY MASTER FUND LTD ; GENIA TECHNOLOGIES INC325 E. MIDDLEFIELD ROADMOUNTAIN VIEWCA94043US

Inventor(s):(std)**:** BIBILLO ARKADIUSZ ; CHEN ROGER ; DAVIS RANDALL ; DEIERLING KEVIN ; DAVIS RANDALL W

Inventor(s): ROGER CHEN ; RANDALL DAVIS ; ARKADIUSZ BIBILLO ; KEVIN DEIERLING ; DAVIS RANDALLUS ; DEIERLING KEVINUS ; CHEN ROGERUS ; BIBILLO ARKADIUSZUS

Agent(s): BORDEN LADNER GERVAIS LLP; TESCHEMACHER ANDREA; YAMAMOTO OSAMU; TAKEUCHI SHIGEO; ONO SHINJIRO; KOBAYASHI YASUSHI; FISHERBROYLES LLP; VICTORIA L; ALEMOZAFAR ALI ET AL

Designated states: AE AG AL AM AO AT AU AZ BA BB BE BF BG BH BJ BN BR BW BY BZ CA CF CG CH CI CL CM CN CO CR CU CY CZ DE DK DM DO DZ EC EE EG ES FI FR GA GB GD GE GH GM GN GQ GR GT GW HN HR HU ID IE IL IN IS IT JP KE KG KM KN KP KR KZ LA LC LI LK LR LS LT LU LV LY MA MC MD ME MG MK ML MN MR MT MW MX MY MZ NA NE NG NI NL NO NZ OM PA PE PG PH PL PT QA RO RS RU RW SC SD SE SG SI SK SL SM SN ST SV SY SZ TD TG TH TJ TM TN TR TT TZ UA UG US UZ VC VN ZA ZM ZW

International class (IPC 8-9): C12M1/00 C12N15/09 C12Q1/68 G01N27/447 G01N33/48 G01N33/487 G01N33/53 (Advanced/Invention)

CPC: G01N27/44791 G01N33/53 G01N33/48 C12Q1/6869 G01N33/48721 C12Q2565/631

US class: 204/451 204/601 438/689

Classification Explorer

Cited documents: WO9746704 A1, WO9732999 A1, WO9321340 A1, WO9106678 A1, WO13191793 A1, WO13154999 A2, WO13123450 A1, WO13109970 A1, WO12121756 A1, WO12088341 A2, WO12088339 A2, WO12009578 A2, WO11106459 A2, WO11097028 A1, WO11067559 A1, WO11038241 A1, WO10109197 A2, WO09054922 A1, WO09051807 A1, WO09020682 A2, WO08124107 A1, WO08102120 A1, WO08069973 A3, WO08069973 A2, WO08034602 A3, WO08034602 A2, WO07146158 A1, WO07127327 A2, WO07062105 A3, WO07062105 A2, WO07053719 A3, WO07053719 A2, WO07053702 A3, WO07053702 A2, WO07002204 A3, WO07002204 A2, WO06020775 A2, WO05084367 A3, WO05084367 A2, WO04072238 A2, WO04071155 A2, WO04055160 A3, WO04055160 A2, WO04007773 A1, WO03093494 A2, WO03020734 A2, WO0229003 A3, WO0229003 A2, WO0222883 A1, WO02079519 A1, WO0148235 A2, US8541849 BB, US8461854 BB, US8324914 BB, US8298792 BB, US8257954 BB, US8252911 BB, US8192961 BB, US8148516 BB, US8137569 BB, US8133672 BB, US8088575 BB, US8058414 BB, US8058031 BB, US8058030 BB, US8022511 BB, US7989928 BB, US7982029 BB, US7973146 BB, US7948015 BB, US7947454 BB, US7939270 BB, US7939259 BB, US7924335 BB, US7906371 BB, US7897738 BB, US7883869 BB, US7871777 BB, US7790869 BB, US7777505 BB, US7777013 BB, US7745116 BB, US7727722 BB, US7713698 BB, US7710479 BB, US7635578 BB, US7626379 BB, US7625701 BB, US7622934 BB, US7622279 BB, US7452698 BB, US7446017 BB, US7405281 BB, US7368668 BB, US7361466 BB, US7345159 BB, US7321329 BB, US7279337 BB, US7244602 BB, US7238485 BB, US7233541 BB, US7229799 BB, US7223541 BB, US7189503 BB, US7153672 BA, US7074597 BB, US7057026 BB, US7052839 BB, US7041812 BB, US7033762 BB, US6952651 BB, US6916665 BB, US6891278 BB, US6880346 BA, US6824659 BB, US6800933 BA, US6794177 BB, US6762048 BB, US6746594 BB, US6723513 BB, US6699719 BB, US6686997 BA, US6673615 BB, US6664079 BB, US6627748 BA, US6616895 BB, US6607883 BA, US6485703 BA, US6413792 BA, US6399335 BA, US6399320 BA, US6383749 BB, US6362002 BA, US6321101 BA, US6265193 BA, US6261797 BA, US6255083 BA, US6232103 BA, US6217731 BA, US6210896 BA, US6082115 A, US6046005 A, US6015714 A, US6014213 A, US6012291 A, US5981733 A, US5952180 A, US5939301 A, US5912155 A, US5876936 A, US5869244 A, US5814454 A, US5804386 A, US5795782 A, US5770367 A, US5756355 A, US5576204 A, US5569950 A, US5457342 A, US5308539 A, US5302509 A, US5198543 A, US4859945 A, US4121192 A, US2656508 A, US2014134616 AA, US2014093869 AA, US2014014513 AA, US2013280700 AA, US2013264207 AA, US2013263946 AA, US2013244340 AA, US2013240359 AA, US2013237460 AA, US2013207205 AA, US2013015068 AA, US2012261261 AA, US2012196759 AA, US2012188092 AA, US2012187963 AA, US2012160688 AA, US2012160687 AA, US2012160681 AA, US2012156680 AA, US2012149021 AA, US2012142006 AA, US2012115736 AA, US2012094332 AA, US2012094278 AA, US2012052188 AA, US2012040869 AA, US2012034602 AA, US2011287414 AA, US2011244447 AA, US2011218414 AA, US2011193570 AA, US2011193249 AA, US2011192723 AA, US2011189659 AA, US2011174625 AA, US2011168968 AA, US2011165652 AA, US2011160093 AA, US2011059505 AA, US2011053284 AA, US2011039259 AA, US2011014611 AA, US2011014601 AB, US2011005918 AA, US2010331194 AA, US2010320094 AA, US2010301398 AA, US2010297644 AA, US2010292101 AA, US2010261247 AA, US2010243449 AA, US2010148126 AA, US2010122907 AA, US2010121582 AA, US2010093555 AA, US2010092952 AA, US2010078777 AA, US2010075332 AA, US2010075328 AA, US2010072080 AA, US2010047802 AA, US2010035260 AA, US2010025249 AA, US2010025238 AA, US2009325154 AA, US2009298072 AA, US2009269759 AA, US2009263791 AA, US2009215050 AA, US2009167288 AA, US2009136958 AA, US2009102534 AA, US2009099786 AA, US2009087834 AA, US2009073293 AA, US2009066315 AA, US2009029477 AA, US2008318245 AA, US2008286768 AA, US2008221806 AA, US2008218184 AA, US2008199932 AA, US2008108082 AA, US2008101988 AA, US2007275387 AA, US2007196846 AA, US2007190542 AA, US2007173731 AA, US2006278992 AA, US2006252038 AA, US2006115951 AA, US2006105461 AA, US2006057565 AA, US2005239194 AA, US2005221351 AA, US2005208574 AA, US2005186576 AA, US2005127035 AA, US2005091989 AA, US2005032081 AA, US2004185466 AA, US2004122335 AA, US2003198982 AA, US2003166282 AA, US2003101006 AA, US2003054360 AA, US2003027140 AA, JP2012026986 A2, CN101680873 A,

Forward Citations: WO20000169, WO19055856, WO19040546, WO18205648, WO18205602, WO18183123, WO18167108, WO18077845, WO18054970, WO18050730, WO18017884, WO18002005, WO18001925, WO17167809, WO17167807, WO17148862, WO17148861, WO17132270, WO17070692, WO17050723, WO17021442, WO16206593, WO15197355, WO15077751, US9926596, US9759711, US9678055, US9617595, US9617593, US9605309, US9605307, US9581563, US9567630, US9551697, US9377437, US9322062, US9290805, US9121059, US9041420, US8962242, US8845880, US2017131236, US2017059546, US2017058397, US2016290988, US10590480, US10577653, US10576456, US10570449, US10544456, US10533218, US10526647, US10526588, US10494672, US10472674, US10465240, US10456993, US10444179, US10443096, US10438662, US10421995, US10400278, US10393700, US10371692, US10345290, US10343350, US10308918, US10273536, US10266892, US10266813, US10260095, US10246479, US10240195, US10233490, US10233486, US10190158, US10174371, US10156541, US10155979, US10125393, US10100356, US10093975, US10036739, US10012637, JP6595094, JP6549713, JP2019522196, JP2019516952, JP2018525629, JP2018508746, GB2543217, EP3365273, EP3233268, EP3161146, EP3158330, EP3158330, EP2864502, EP2864502, EP2836604, CN110383065, CN109154596, CN108449991, CN107530673, CN107530673, CN107164466, CN107118955, CN107118955, CN107003295, CN107003295,

Abstract:
The present disclosure provides devices, systems and methods for sequencing nucleic acid molecules. Nucleic acid molecules can be sequenced with a high accuracy (e.g., greater than 97 percent in a single pass) using a chip comprising an array of independently addressable nanopore sensors at a density of at least about 500 sites per 1 mm2. An individual nanopore sensor can include a nanopore in a membrane that is adjacent or in proximity to a sensing electrode.

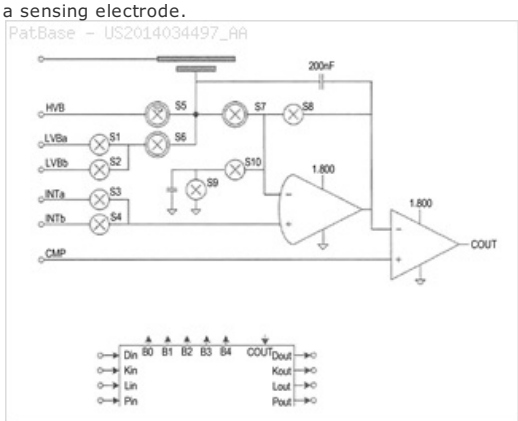

20) Family number: 57187758 (US2016007893A)

© PatBase

Title: SYSTEMS AND METHODS FOR EARLY DISEASE DETECTION AND REAL-TIME DISEASE MONITORING

Priority: US20130850028P 20130206 EP20140704880 20140206 WO2014GB50353 20140206 US20140766394 20140206

Family:

Publication number	Publication date	Application number	Application date
DE602014029469 D1	20180830	DE201460029469T	20140206
EP2953524 A1	20151216	EP20140704880	20140206
EP2953524 B1	20180801	EP20140704880	20140206
US2016007893 AA	20160114	US20140766394	20140206
WO14122467 A1	20140814	WO2014GB50353	20140206
WO14122467 A4	20141023	WO2014GB50353	20140206

Probable Assignee: FREENOME LTD

Assignee(s):(std)**:** FREENOME HOLDINGS INC ; LOXBRIDGE RES LLP

Assignee(s): LOXBRIDGE RESEARCH LLP ; FREENOME HOLDINGS INC SOUTH SAN FRANCISCO ; FREENOME LTD

Inventor(s):(std)**:** ROBERTS CHARLES EDWARD SELKIRK

Agent(s): GIBSON MARK; KERSHAW JESSICA ET AL

Designated states: AE AG AL AM AO AT AU AZ BA BB BE BF BG BH BJ BN BR BW BY BZ CA CF CG CH CI CL CM CN CO CR CU CY CZ DE DK DM DO DZ EC EE EG ES FI FR GA GB GD GE GH GM GN GQ GR GT GW HN HR HU ID IE IL IN IR IS IT JP KE KG KM KN KP KR KZ LA LC LI LK LR LS LT LU LV LY MA MC MD ME MG MK ML MN MR MT MW MX MY MZ NA NE NG NI NL NO NZ OM PA PE PG PH PL PT QA RO RS RU RW SA SC SD SE SG SI SK SL SM SN ST SV SY SZ TD TG TH TJ TM TN TR TT TZ UA UG US UZ VC VN ZA ZM ZW

International class (IPC 8-9): A61B5/00 A61B5/145 G01N33/50 (Advanced/Invention)

CPC: A61B5/0031 A61B5/14546 A61B5/6876

US class: 600/309

Classification Explorer

Cited documents: WO9636275 A1, WO9305730 A1, WO9305730 A1, WO13138497 A1, WO13138497, WO12164270 A1, WO12164270, WO12107778 A2, WO12107778, WO12042226 A2, WO12042226, WO11067559 A1, WO10005915 A2, WO10005915, WO0119239 A1, WO0079257 A1, US6855115 BB, US6111520 A, US5836889 A, US5836889 A, US2012322679 AA, US2012322679 AA, US2012133354 AA, US2012133354 AA, US2012123221 AA, US2012123221 AA, US2012064599 AA, US2012064599 AA, US2012058468 AA, US2012058468 AA, US2011229877 AA, US2011229877 AA, US2011177498 AA, US2011177498 AA, US2011004275 AA, US2010131067 AA, US2009209904 AA, US2009209904 AA, US2009115396 AA, US2008269840 AA, US2008077028 AA, US2007135698 AA, US2006174712 AA, US2006174712 AA, US2004199222 AA, US2004199222 AA, US2003136417 AA, US2002098526 AA, GB2441078 A1, GB2441078 A1, EP0116820 A2, EP0116820,

Forward Citations: WO19035075, WO18234864, WO18009905, WO17147552, WO16030426, US9874554, US9811774, US10576305, US10414755, US10300310, US10300309, US10169207, US10162736, US10118054, CN107003371,

Abstract:
Devices, systems and methods are provided for the real-time detection of disease through constant or periodic monitoring of biomolecules in an individual without laboratory sampling. Biomolecule detector devices may be worn in contact with skin, or be implanted in fluid communication with a biological fluid to provide information and identity of disease-related circulating biomolecules in an individual.

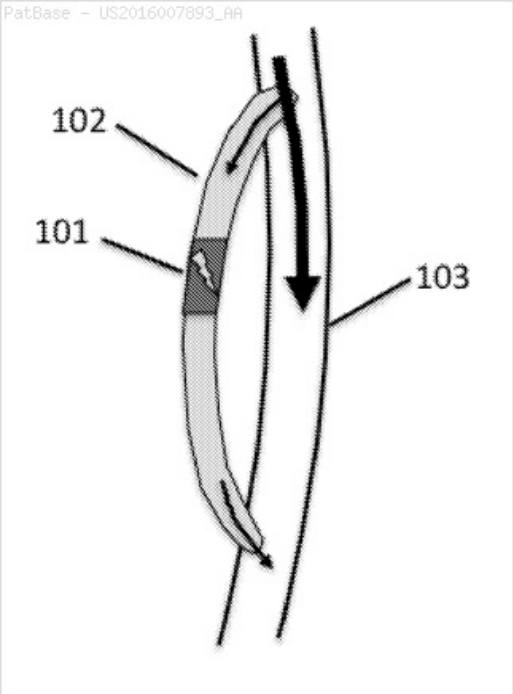

21) Family number: 65762788 (US2018188278A)

© PatBase

Title: AUTOMATED VOLUMETRIC REAGENT DELIVERY TESTING

Priority: US20170442736P 20170105 GB20170004772 20170324 US20170841085 20171213 WO2017US67840 20171221

Family:

Publication number	Publication date	Application number	Application date
CN110226090 A	20190910	CN201780084612	20171221
EP3566058 A1	20191113	EP20170890249	20171221
GB201704772 A0	20170510	GB20170004772	20170324
TW201830020 A	20180816	TW20170145537	20171225
US2018188278 AA	20180705	US20170841085	20171213
WO18128845 A1	20180712	WO2017US67840	20171221

Probable Assignee: ILLUMINA INC

Assignee(s):(std)**:** ILLUMINA INC

Inventor(s):(std)**:** CAPPA KEVIN ; DREWS BRADLEY KENT ; CAPPA KEVIN JAMES

Agent(s): MURGITROYD AND CO; SCHOLZ CHRISTIAN D ET AL

Designated states: AE AG AL AM AO AT AU AZ BA BB BE BF BG BH BJ BN BR BW BY BZ CA CF CG CH CI CL CM CN CO CR CU CY CZ DE DJ DK DM DO DZ EC EE EG ES FI FR GA GB GD GE GH GM GN GQ GR GT GW HN HR HU ID IE IL IN IR IS IT JO JP KE KG KH KM KN KP KR KW KZ LA LC LI LK LR LS LT LU LV LY MA MC MD ME MG MK ML MN MR MT MW MX MY MZ NA NE NG NI NL NO NZ OM PA PE PG PH PL PT QA RO RS RU RW SA SC SD SE SG SI SK SL SM SN ST SV SY SZ TD TG TH TJ TM TN TR TT TZ UA UG US UZ VC VN ZA ZM ZW

International class (IPC 8-9): B01L3/00 C12M1/00 C12Q1/68 G01N35/04 G01N35/08 G01N35/10 (Advanced/Invention); C12M1/00 C12Q1/68 (Advanced/Non-invention)

CPC: B01L3/0293 B01L3/502715 B01L2200/027 B01L2200/143 B01L2300/0877 B01L2400/0478 B01L2400/0622 G01N35/1002 G01N35/1016 G01N35/1097 B01L3/50273 B01L3/502738 B01L2200/16 B01L2300/024 G01N35/1009 G01N2035/1025

US class: 1/1 422/62

Classification Explorer

Cited documents: US2016047805 AA, US2015346149 AA, US2013260372 AA, US2010300895 AA, US2010111768 AA,

Forward Citations: US2017339602,

Abstract:
A system includes a reagent selector valve controllable to select a reagent flow path from a plurality of reagent flow paths, and a pump coupled to the reagent flow path to draw a liquid through the reagent flow path in accordance with a prescribed test protocol. The system includes a discharge flow path to expel the drawn liquid, and a flow meter to measure liquid displaced by the pump and that outputs data representative of the measured flow. The system also includes a processor to access the data and to determine a volume of the liquid displaced by the pump.

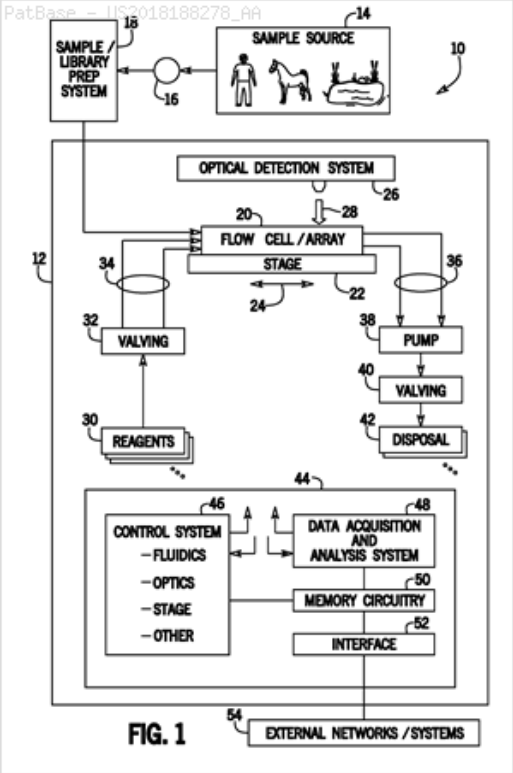

22) Family number: 76699810 (WO19227013A1)

© PatBase

Title: DROPLET INTERFACES IN ELECTRO-WETTING DEVICES

Priority: US20180675943P 20180524

Family:

Publication number	Publication date	Application number	Application date
WO19227013 A1	20191128	WO2019US33957	20190524

Probable Assignee: OXFORD NANOPORE TECH INC

Assignee(s):(std)**:** OXFORD NANOPORE TECH INC

Assignee(s): OXFORD NANOPORE TECHNOLOGIES INC

Inventor(s):(std)**:** HOLDEN MATTHEW ; HEALY KEN

Agent(s): YOUNG DANIEL W ET AL

Designated states: AE AG AL AM AO AT AU AZ BA BB BE BF BG BH BJ BN BR BW BY BZ CA CF CG CH CI CL CM CN CO CR

CU CY CZ DE DJ DK DM DO DZ EC EE EG ES FI FR GA GB GD GE GH GM GN GQ GR GT GW HN HR HU ID IE IL IN IR IS IT JO JP KE KG KH KM KN KP KR KW KZ LA LC LK LR LS LT LU LV LY MA MC MD ME MG MK ML MN MR MT MW MX MY MZ NA NE NG NI NL NO NZ OM PA PE PG PH PL PT QA RO RS RU RW SA SC SD SE SG SI SK SL SM SN ST SV SY SZ TD TG TH TJ TM TN TR TT TZ UA UG US UZ VC VN ZA ZM ZW

International class (IPC 8-9): B01L3/00 C12Q1/68 G01N33/487 (Advanced/Invention)

CPC: B01L3/502792 B01L2200/10 B01L2300/0645 B01L2300/165 B01L2400/0424 B01L2400/0427 C12M23/16 C12M47/06 C12N13/00 C12Q1/6806 G01N33/48721 G01N33/48728

Classification Explorer

Cited documents: WO17149318 A1, WO17149317 A1, WO17149316 A1, WO17004504 A1, WO16034591 A2, WO15150786 A1, WO15140535 A1, WO14064444 A1, WO14064443 A2, WO13153359 A1, WO13121224 A1, WO13083983 A1, WO13041878 A1, WO12164270 A1, WO12107778 A2, WO11067559 A1, WO10086603 A1, WO08012552 A1, US9914135 BB, US8653832 BB, US7163612 BB, US6916488 BA, US6911132 BB, US6565727 BA, US2018095067 AA, US2016305906 AA, US2013217113 AA, US2010194408 AA, GB2533952 A1, GB2017053603,

Abstract:
Droplet interfaces are formed between droplets in an electro-wetting device comprising an array of actuation electrodes. Actuation signals are applied to selected actuation electrodes to place the droplets into an energised state in which the shape of the droplets is modified compared to a shape of the droplets in a lower energy state and to bring the two droplets into proximity. The actuation signals are then changed to lower the energy of the droplets into the lower energy state so that the droplets relax into the gap and the two droplets contact each other thereby forming a droplet interface. The use of sensing electrodes in the device permit electrical current measurements across the droplet interface. The sensing electrodes can be used for either (i) applying a reference signal during droplet actuation or (ii) recording electrical current measurements. Two or more electrodes are configurable to lyse cells within a droplet positioned over said electrodes.

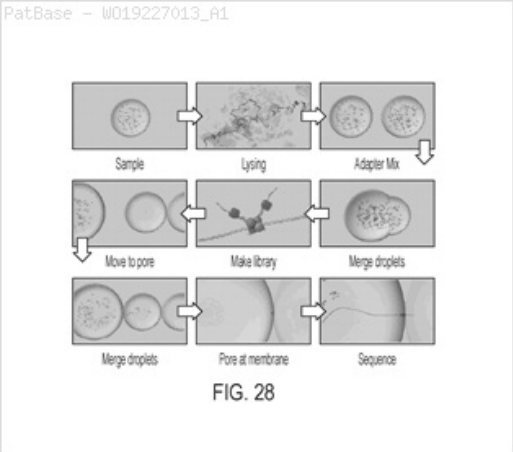

23) Family number: 75839942 (WO19171852A1) © PatBase

Title: ION CONCENTRATION MEASUREMENT DEVICE

Priority: JP20180039344 20180306

Family:

Publication number	Publication date	Application number	Application date
WO19171852 A1	20190912	WO2019JP03777	20190204

Probable Assignee: HITACHI HIGH TECH CORP

Assignee(s):(std)**:** HITACHI HIGH TECH CORP

Assignee(s): HITACHI HIGH TECHNOLOGIES CORP

Inventor(s):(std)**:** MIYAKE MASAFUMI ; ONO TETSUYOSHI ; OZAWA SATOSHI ; IKEDA UKYO

Agent(s): HIRAKI AND ASSOCIATES

Designated states: AE AG AL AM AO AT AU AZ BA BB BE BF BG BH BJ BN BR BW BY BZ CA CF CG CH CI CL CM CN CO CR CU CY CZ DE DJ DK DM DO DZ EC EE EG ES FI FR GA GB GD GE GH GM GN GQ GR GT GW HN HR HU ID IE IL IN IR IS IT JO JP KE KG KH KM KN KP KR KW KZ LA LC LK LR LS LT LU LV LY MA MC MD ME MG MK ML MN MR MT MW MX MY MZ NA NE NG NI NL NO NZ OM PA PE PG PH PL PT QA RO RS RU RW SA SC SD SE SG SI SK SL SM SN ST SV SY SZ TD TG TH TJ TM TN TR TT TZ UA UG US UZ VC VN ZA ZM ZW

International class (IPC 8-9): G01N27/28 G01N27/416 (Advanced/Invention)

CPC: G01N27/28 G01N27/416

Classification Explorer

Cited documents: WO17029893 A1, JP2013512447 T2, JP2011203252 A2, JP2007093252 A2,

Abstract:
The purpose of the present invention is to suppress the influence of noise and heat produced by memory on the measurement results of an ion concentration measurement device that uses an ion detection element that outputs a potential corresponding to an ion concentration. An ion concentration measurement device according to the present invention comprises a **cartridge** accommodating an ion detection element and memory and supplies power to the memory during a period excluding the period when potential generated by the ion detection element is acquired (see fig. 5).

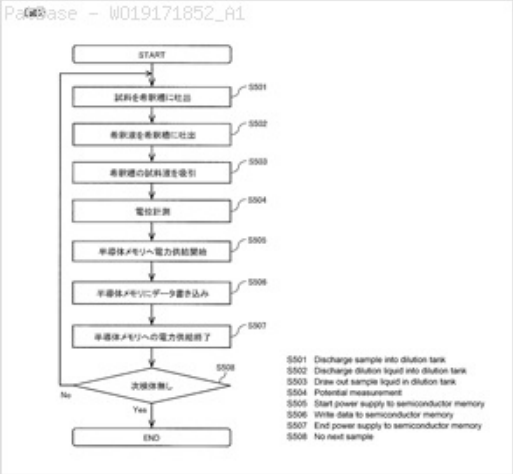

24) Family number: 59104955 (US2015152494A) © PatBase

Title: METHODS FOR FORMING LIPID BILAYERS ON BIOCHIPS

Priority: US20130894661P 20131023 US20140521425 20141022 US20140521427 20141022 CN201480056837 20141023 CN201480056839 20141023 WO2014US61853 20141023 WO2014US61854 20141023 US20160066117 20160310 US20160385779 20161220 US20190272970 20190211

Family:

Publication number	Publication date	Application number	Application date
CA2926124 AA	20160331	CA20142926124	20141023
CA2926140 AA	20160331	CA20142926140	20141023
CN105637081 A	20160601	CN201480056837	20141023
CN105637081 B	20180601	CN201480056837	20141023
CN105637082 A	20160601	CN201480056839	20141023
CN105637082 B	20190215	CN201480056839	20141023
CN108588199 A	20180928	CN201810413080	20141023
CN109735440 A	20190510	CN201910050981	20141023
EP3060646 A1	20160831	EP20140855736	20141023
EP3060646 A4	20170621	EP20140855736	20141023
EP3060646 B1	20200101	EP20140855736	20141023
EP3060647 A1	20160831	EP20140855926	20141023
EP3060647 A4	20170322	EP20140855926	20141023
JP2016533723 T2	20161104	JP20160524559T	20141023
JP2016535589 A2	20161117	JP20160524578	20141023
JP2016535589 T2	20161117	JP20160524578T	20141023
JP6514692 B2	20190515	JP20160524559T	20141023
US2015152494 AA	20150604	US20140521425	20141022
US2015153302 AA	20150604	US20140521427	20141022
US2016327507 AA	20161110	US20160066117	20160310
US2017198343 AA	20170713	US20160385779	20161220
US2019185927 AA	20190620	US20190272970	20190211
US9322062 BB	20160426	US20140521427	20141022
US9567630 BB	20170214	US20140521425	20141022
US10246743 BB	20190402	US20160385779	20161220
US10273536 BB	20190430	US20160066117	20160310
WO15061510 A1	20150430	WO2014US61853	20141023
WO15061510 A9	20151217	WO2014US61853	20141023
WO15061511 A1	20150430	WO2014US61854	20141023
WO15061511 A9	20151126	WO2014US61854	20141023

Probable Assignee: GENIA TECHNOLOGIES INC

Assignee(s):(std)**:** GENIA TECH INC ; GENIA TECHNOLOGIES INC ; ROCHE MOLECULAR SYSTEMS INC ; ROCHE SEQUENCING SOLUTIONS INC

Assignee(s): AGUIRRE ANNE ; CECH CYNTHIA ; DAVIS RANDALL W ; TRANS ANDREW ; POLLARD JAMES ; HARADA ERIC TAKESHI ; LIU EDWARD SHIAN

Inventor(s):(std)**:** FOSTER JOHN ; CHEN ROGER ; TIAN HUI ; YUAN ROBERT ; CECH CYNTHIA ; TRANS ANDREW ; HARADA ERIC TAKESHI ; LIU EDWARD SHIAN ; AGUIRRE ANNE ; POLLARD JAMES ; DAVIS RANDALL W

Agent(s): BORDEN LADNER GERVAIS LLP; TESCHEMACHER ANDREA; YAMAMOTO OSAMU; TAKEUCHI SHIGEO; ONO SHINJIRO; KOBAYASHI YASUSHI; VICTORIA L; FISHERBROYLES LLP; PASS JASON M; BOYD VICTORIA L

Designated states: AE AG AL AM AO AT AU AZ BA BB BE BF BG BH BJ BN BR BW BY BZ CA CF CG CH CI CL CM CN CO CR CU CY CZ DE DK DM DO DZ EC EE EG ES FI FR GA GB GD GE GH GM GN GQ GR GT GW HN HR HU ID IE IL IN IR IS IT JP KE KG KM KN KP KR KZ LA LC LI LK LR LS LT LU LV LY MA MC MD ME MG MK ML MN MR MT MW MX MY MZ NA NE NG NI NL NO NZ OM PA PE PG PH PL PT QA RO RS RU RW SA SC SD SE SG SI SK SL SM SN ST SV SY SZ TD TG TH TJ TM TN TR TT TZ UA UG US UZ VC VN ZA ZM ZW

International class (IPC 8-9): B05D5/12 C12M1/00 C12M1/34 C12M1/36 C12Q1/68 C12Q1/6869 G01N27/00 G01N27/30 G01N27/327 G01N27/447 G01N33/487 (Advanced/Invention)

CPC: C12Q2565/607 C12Q2565/631 C12Q1/6869 G01N33/48721 C12M1/34 G01N27/3277 G01N27/3278 G01N27/44791

US class: 1/1 204/403.01 204/403.08 204/451 205/778

Classification Explorer

Cited documents: WO9746704 A1, WO9732999 A1, WO9321340 A1, WO9106678 A1, WO13191793 A1, WO13154999 A2, WO13123450 A1, WO13123450 A1, WO13109970 A1, WO13063126 A2, WO13063126 A2, WO12121756 A1, WO12088341 A2, WO12088339 A2, WO12009578 A2, WO11106459 A2, WO11097028 A1, WO11097028, WO11067559 A1, WO11038241 A1, WO10109197 A2, WO09054922 A1, WO09051807 A1, WO09020682 A2, WO08124107 A1, WO08102120 A1, WO08069973 A3, WO08069973 A2, WO08042018 A2, WO08042018 A2, WO08034602 A3, WO08034602 A2, WO07146158 A1, WO07127327 A2, WO07127327 A2, WO07116978 A1, WO07062105 A3, WO07062105 A2, WO07053719 A3, WO07053719 A2, WO07053702 A3, WO07053702 A2, WO07002204 A3, WO07002204 A2, WO06020775 A2, WO05084367 A3, WO05084367 A2, WO04072238 A2, WO04071155 A2, WO04055160 A3, WO04055160 A2, WO04007773 A1, WO03020734 A2, WO0229003 A3, WO0229003 A2, WO0222883 A1, WO02079519 A1, WO0148235 A2, US9567630 BB, US8541849 BB, US8324914 BB, US8298792 BB, US8257954 BB, US8252911 BB, US8192961 BB, US8148516 BB, US8137569 BB, US8133672 BB, US8058414 BB, US8058031 BB, US8058030 BB, US8022511 BB, US7989928 BB, US7973146 BB, US7948015 BB, US7947454 BB, US7939270 BB, US7939259 BB, US7924335 BB, US7906371 BB, US7899996 BB, US7899996 BA, US7897738 BB, US7883869 BB, US7871777 BB, US7833396 BB, US7833396 BB, US7790869 BB, US7777505 BB, US7777013 BB, US7745116 BB, US7727722 BB, US7713698 BB, US7710479 BB, US7635578 BB, US7626379 BB, US7625701 BB, US7622934 BB, US7622279 BB, US7452698 BB, US7446017 BB, US7405281 BB, US7368668 BB, US7361466 BB, US7345159 BB, US7321329 BB, US7279337 BB, US7244602 BB, US7238485 BB, US7233541 BB, US7229799 BB, US7223541 BB, US7217520 BB, US7217520 BB, US7189503 BB, US7153672 BA, US7074597 BB, US7057026 BB, US7052839 BB, US7041812 BB, US7033762 BB, US6952651 BB, US6916665 BB, US6891278 BB, US6880346 BA, US6824659 BB, US6800933 BA, US6794177 BB, US6762048 BB, US6746594 BB, US6723513 BB, US6699719 BB, US6686997 BA, US6673615 BB, US6664079 BB, US6627748 BA, US6616895 BB, US6607883 BA, US6485703 BA, US6413792 BA, US6399335 BA, US6399320 BA, US6383749 BB, US6362002 BA, US6321101 BA, US6265193 BA, US6261797 BA, US6255083 BA, US6232103 BA, US6217731 BA, US6210896 BA, US6082115 A, US6046005 A, US6015714 A, US6014213 A, US6012291 A, US5981733 A, US5952180 A, US5939301 A, US5912155 A, US5876936 A, US5869244 A, US5814454 A, US5804386 A, US5795782 A, US5770367 A, US5756355 A, US5576204 A, US5569950 A, US5457342 A, US5308539 A, US5302509 A, US5198543 A, US4859945 A, US4121192 A, US2656508 A, US2014093869 AA, US2014034497 AA, US2014014513 AA, US2013264207 AA, US2013263946 AA, US2013260371 AA, US2013260371 AA, US2013244340 AA, US2013240359 AA, US2013237460 AA, US2013207205 AA, US2013140192 AA, US2013087467 AA, US2013087467 AA, US2013015068 AA, US2012261261 AA, US2012196759 AA, US2012188092 AA, US2012187963 AA, US2012160688 AA, US2012160687 AA, US2012156680 AA, US2012149021 AA, US2012115736 AA, US2012094332 AA, US2012094278 AA, US2012052188 AA, US2012040869 AA, US2012034602 AA, US2012005218 AA, US2011287414 AA, US2011244447 AA, US2011218414 AA, US2011193570 AA, US2011193249 AA, US2011192723 AA, US2011189659 AA, US2011174625 AA, US2011168968 AA, US2011165652 AA, US2011160093 AA, US2011089957 AA, US2011059505 AA, US2011053284 AA, US2011039259 AA, US2011014611 AA, US2011014601 AB, US2011005918 AA, US2010331194 AA, US2010331194 AA, US2010320094 AA, US2010301398 AA, US2010297644 AA, US2010261247 AA, US2010243449 AA, US2010148126 AA, US2010122907 AA, US2010121582 AA, US2010093555 AA, US2010092952 AA, US2010078777 AA, US2010075332 AA, US2010075328 AA, US2010072080 AA, US2010047802 AA, US2010035260 AA, US2010025249 AA, US2010025238 AA, US2009325154 AA, US2009298072 AA, US2009269759 AA, US2009263791 AA, US2009215050 AA, US2009167288 AA, US2009136958 AA, US2009102534 AA, US2009099786 AA, US2009087834 AA, US2009073293 AA, US2009066315 AA, US2009029477 AA, US2008318245 AA, US2008286768 AA, US2008221806 AA, US2008218184 AA, US2008199932 AA, US2008108082 AA, US2008101988 AA, US2007275387 AA, US2007196846 AA, US2007190542 AA, US2007173731 AA, US2007105089 AA, US2007105089 AA, US2006278992 AA, US2006252038 AA, US2006115951 AA, US2006105461 AA, US2006057565 AA, US2005239134 AA, US2005221351 AA, US2005208574 AA, US2005186576 AA, US2005127035 AA, US2005091989 AA, US2005079598 AA, US2005079598 AA, US2005032081 AA, US2004185466 AA, US2004122335 AA, US2003198982 AA, US2003166282 AA, US2003101006 AA, US2003077642 AA, US2003054360 AA, US2003027140 AA, JP2013534619 T2, JP2013118852 A2, JP2013118852, JP2011160718 A2, JP2011160718, JP2009156572 A2, JP2009156572, JP2005164388 A2, JP2005164388,

Forward Citations: WO20043653, WO19228995, WO19213571, WO18195222, WO18001925, WO17184866, WO17167807, WO17148862, WO17148860, WO17125566, WO17125565, WO17036962, WO17036961, USD815752, US9769411, US2016290988, US10590480, US10577653, US10576456, US10526588, US10465240, US10371664, US10351908, US10345290, US10308918, US10266813, US10246743, US10233486, US10227645, US10155979, US10036739, JP2019522196, JP2019516952, EP3212810, DE102017130198, DE102015106032, CN109416354, CN109313176, CN109154596, CN108474785, CN108226249,

Abstract:
This disclosure provides a biochip comprising a plurality of wells. The biochip includes a membrane that is disposed in or adjacent to an individual well of the plurality of wells. The membrane comprises a nanopore, and the individual well comprises an electrode that detects a signal upon ionic flow through the pore in response to a species passing through or adjacent to the nanopore. The electrode can be a non-sacrificial electrode. A lipid bilayer can be formed over the plurality of wells using a bubble.

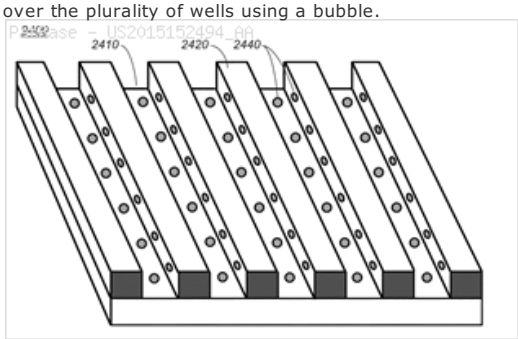

25) Family number: 54976992 (US2013275486A) © PatBase

Title: CLOUD COMPUTING ENVIRONMENT FOR BIOLOGICAL DATA

Priority: US20120622763P 20120411 US20130790596 20130308 US20160258651 20160907 US20190259434 20190128

Family:

Publication number	Publication date	Application number	Application date
US2013275486 AA	20131017	US20130790596	20130308
US2016378940 AA	20161229	US20160258651	20160907
US2019164629 AA	20190530	US20190259434	20190128

US9444880 BB	20160913	US20130790596	20130308
US10223502 BB	20190305	US20160258651	20160907

Probable Assignee: ILLUMINA INC

Assignee(s):(std)**:** ILLUMINA INC

Inventor(s):(std)**:** GARCIA FRANCISCO JOSE ; KAIN ROBERT C ; NELSON ANDREW R ; KAHN SCOTT D ; DICKINSON ALEXANDER G

Agent(s): FLETCHER YODER PC

International class (IPC 8-9): G06F19/00 G06F19/28 G06F21/62 G16B30/10 G16B50/00 H04L29/06 H04L29/08 H04W4/22 H04W4/90 (Advanced/Invention)

CPC: H04L63/102 H04L63/08 G06F21/6218 G16B50/00 G06F19/28 G16H40/63 G06F19/3418 G16B30/10 H04L67/10

US class: 1/1 709/201 726/4

Classification Explorer

Cited documents: WO11067559 A1, WO07010251 A2, WO06064199 A1, WO05065814 A1, US9444880 BB, US8244479 BB, US8241573 BB, US7870044 BB, US7057026 BB, US7001792 BB, US6969488 BB, US6306597 BA, US6172218 BA, US2014075183 AA, US2014032125 AA, US2013184999 AA, US2013110775 AA, US2013096943 AA, US2012331528 AA, US2012270305 AA, US2012237928 AA, US2012203823 AA, US2012124666 AA, US2012110033 AA, US2012020537 AA, US2011301441 AA, US2011220775 AA, US2011196908 AA, US2011179141 AA, US2011179111 AA, US2011035594 AA, US2010299763 AA, US2010299313 AA, US2010282617 AA, US2010137143 AA, US2010088205 AA, US2010083303 AA, US2010056877 AA, US2009127589 AA, US2009026082 AA, US2007166705 AA, US2006281109 AA, US2006240439 AA, US2006188901 AA, US2005100900 AA,

Forward Citations: WO19027767, WO18004044, WO16178643, WO14144569, US9958465, US9692932, US9338218, US2018167370, US2016044206, US10438244, US10223502, EP2971099, CN108875352, CN105590045, CN105590045,
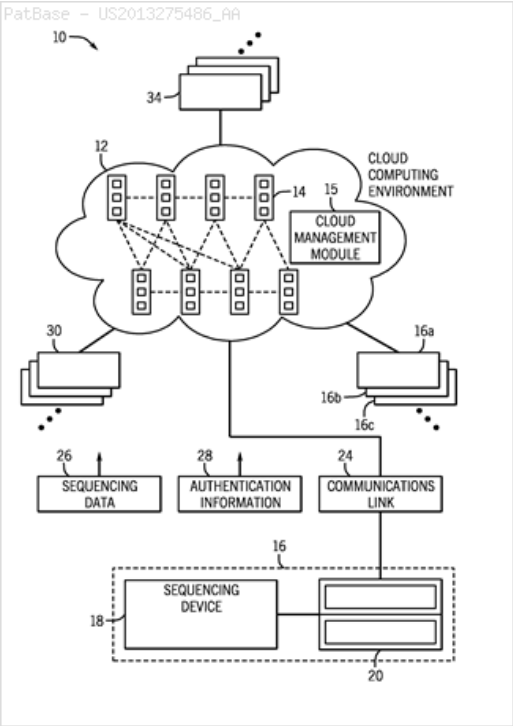
Abstract:
The present invention provides a novel approach for storing, analyzing, and/or accessing biological data in a cloud computing environment. Sequence data generated by a particular sequencing device may be uploaded to the cloud computing environment during a sequencing run, which reduces the on-site storage needs for the sequence data. Analysis of the data may also be performed in the cloud computing environment, and the instructions for such analysis may be set at the originating sequencing device. The sequence data in the cloud computing environment may be shared according to permissions. Further, the sequence data may be modified or annotated by authorized secondary users.