1) Family number: 43588019 (US2011030258A)

© PatBase

Title: FIREARM ACCESSORY

Priority: IL20080189239 20080203 WO2009IL00118 20090201 IL20100207365 20100802 US20100865876 20101018 US20110229879 20110912

Family:

Publication number	Publication date	Application number	Application date
EP2247907 A2	20101110	EP20090706589	20090201
EP2247907 A4	20131030	EP20090706589	20090201
IL189239 A0	20080807	IL20080189239	20080203
IL189239 A1	20131128	IL20080189239	20080203
IL207365 A0	20101230	IL20090207365	20090201
US2011030258 AA	20110210	US20090865876	20090201
US2012131829 AA	20120531	US20110229879	20110912
WO09095921 A2	20090806	WO2009IL00118	20090201
WO09095921 A3	20100311	WO2009IL00118	20090201

Probable Assignee: ACTION ITEMS LTD

Assignee(s):(std)**:** ACTIONS ITEMS LTD ; FISTIKCHI NISMI ; GUR ARI ORI ; MONSON LIRAN ; LHB LTD ; LIRAN MONSON ; NISSIM FISTUKCHI ; ORI GUR ARI ; ACTION ITEMS LTD

Assignee(s): ACTIONS ITEMS LIMITED ; ACTION ITEMS LIMITED

Inventor(s):(std)**:** GUR ARI ORI ; FISTIKCHI NISMI ; MONSON LIRAN

Inventor(s): LIRAN MONSON ; NISSIM FISTUKCHI ; ORI GUR ARI

Agent(s): MODIANO MICAELA NADIA; DR MARK FRIEDMAN LTD; DR MARK M FRIEDMAN C O BILL POLKINGHORN DISCOVERY DISPATCH; BRASS DANIEL R

Designated states: AE AG AL AM AO AT AU AZ BA BB BE BF BG BH BJ BR BW BY BZ CA CF CG CH CI CM CN CO CR CU CY CZ DE DK DM DO DZ EC EE EG ES FI FR GA GB GD GE GH GM GN GQ GR GT GW HN HR HU ID IE IL IN IS IT JP KE KG KM KN KP KR KZ LA LC LI LK LR LS LT LU LV LY MA MC MD ME MG MK ML MN MR MT MW MX MY MZ NA NE NG NI NL NO NZ OM PG PH PL PT RO RS RU SC SD SE SG SI SK SL SM SN ST SV SY SZ TD TG TJ TM TN TR TT TZ UA UG US UZ VC VN ZA ZM ZW

International class (IPC 8-9): F41A17/00 F41A21/26 F41A21/36 F41A25/00 F41A9/24 F41C23/00 F41C23/06 F41C23/08 F41C23/10 F41C23/12 F41C23/20 F41C23/22 F41C27/00 (Advanced/Invention);
F41C23/22 (Advanced/Non-invention);
F41A17/00 F41A9/00 (Core/Invention);
F41A F41C (Subclass/Invention)

CPC: F41C23/12 F41C23/22 F41A3/72 F41A17/54 F41C23/04

European class: F41A17/54 F41A3/72 F41C23/04 F41C23/12 F41C23/22

US class: 42/1.06 42/1.060P 42/6 42/69.01 42/69.010S 42/6S 42/71.01 42/71.010S 42/71.02 42/71.020S 42/74 42/74S 42/84 42/84S 42/90 42/90S 42/97 42/97S

Classification Explorer

Cited documents: US6829855 BB, US6561073 BA, US6349496 BA, US6318014 BA, US5711102 A, US5479736 A, US4298150 A, US4271623 A, US3290815 A, US2007006508 AA, US2006150467 AA, US1229721 A, FR920557 A, EP1870660 A1, DE20005798 U1,

Forward Citations: WO14041382, WO14041382, WO13058857, WO13058857, USD875199, USD870837, USD865898, USD853516, USD847933, USD828476, USD785742, USD717901, USD714413, USD696374, USD687508, USD671184, US9927207, US9921036, US9791226, US9777983, US9581411, US9500439, US9015980, US8887432, US8776421, US8677669, US2018266788, US2018259292, US2017045329, US2015276343, US2015176943, US2011088305, US10627189, US10533825, US10443972, US10156421, TWI436025, RU2614742, EP2895815, EP2314976, EP2314976,

Abstract:
This presented invention relates to the ability of individual, firearms owners and representatives of the law enforcement; military and governmental entities, to enhance the pointability and shootability of their firearms, there is provided a firearm accessory including a firearm, a body including at least one securer for readily securing said firearm to the firearm accessory, wherein the securer is selected from the group consisting of: a grip securer, a racker and a trigger guard securer.

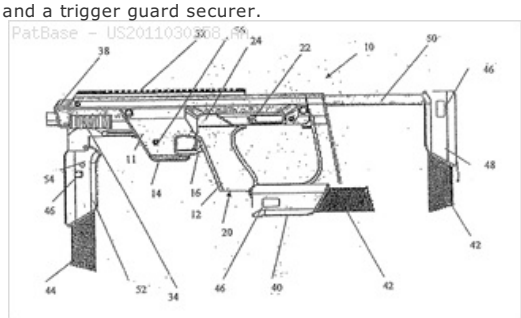

2) Family number: 47097029 (US2011088305A)

© PatBase

Title: HANDGUN CONVERTER

Priority: IL20090201628 20091019 IL20090201629 20091019 IL20100208685 20101013

US20100906218 20101018 CA20102718018 20101019 EP20100188080 20101019
US20140546388 20141118

Family:

Publication number	Publication date	Application number	Application date
CA2718018 AA	20110419	CA20102718018	20101019
DE602010028927 D1	20151224	DE201060028927T	20101019
EP2314976 A2	20110427	EP20100188080	20101019
EP2314976 A3	20140423	EP20100188080	20101019
EP2314976 B1	20151111	EP20100188080	20101019
GB201012649 A0	20100915	GB20100012649	20100728
GB201017627 A0	20101201	GB20100017627	20101019
GB2474538 A1	20110420	GB20100012649	20100728
GB2474538 B2	20111221	GB20100012649	20100728
GB2475136 A1	20110511	GB20100017627	20101019
GB2475136 B2	20111221	GB20100017627	20101019
IL201628 A0	20101130	IL20090201628	20091019
IL201628 A1	20150129	IL20090201628	20091019
IL201629 A0	20101130	IL20090201629	20091019
IL208685 A0	20101230	IL20100208685	20101013
IL208685 A1	20140731	IL20100208685	20101013
US2011088305 AA	20110421	US20100906218	20101018
US2011088539 AA	20110421	US20100844106	20100727
US2015300773 AA	20151022	US20140546388	20141118
US8312803 BB	20121120	US20100844106	20100727
US8887432 BB	20141118	US20100906218	20101018

Probable Assignee: TACTICAL ARMS LTD

Assignee(s):(std)**:** CAA IND LTD ; MOSHE OZ ; OZ MOSHE ; TACTICAL ARMS LTD

Inventor(s):(std)**:** OZ MOSHE

Inventor(s): MOSHE OZ ; OZ MOSHE 52520

Agent(s): NELLIGAN O BRIEN PAYNE LLP; JONES KEITH WILLIAM; PEARL COHEN ZEDEK LATZER BARATZ UK LLP; APPELFELD ZER FISHER WEILER LAW FIRM; PEARL COHEN ZEDEK LATZER BARATZ; LAW OFFICE OF MICHAEL E KONDOUDIS; PEARL COHEN ZEDEK LATZER BARATZ LLP

Designated states: AL AT BA BE BG CH CY CZ DE DK EE ES FI FR GB GR HR HU IE IS IT LI LT LU LV MC ME MK MT NL NO PL PT RO RS SE SI SK SM TR

International class (IPC 8-9): A01B F41A17/46 F41A19/00 F41A21/34 F41A3/72 F41A35/06 F41C F41C23/00 F41C23/12 F41C27/00 (Advanced/Invention);
F41C (Subclass/Invention)

CPC: F41A19/47 F41A3/72 F41A19/34 F41A35/00 F41A19/00 F41C23/12 F41A35/06

European class: F41A19/34 F41A19/47 F41A35/00 F41C23/12

US class: 42/106 42/106S 42/69.01 42/69.010P 42/71.01 42/71.02 42/72 89/1.4 89/1.400P 89/1.42

Classification Explorer

Cited documents: WO09095921 A2, WO09095921 A2, US8015741 BB, US8012741 BB, US7552557 BA, US7437847 BA, US7117625 BB, US6493978 BA, US6318014 BA, US6318014 A, US5448940 A, US4793085 A, US4176584 A, US3685194 A, US3685194 A, US2012131829 AA, US2011154710 AA, US2011107644 AA, US2011030258 AA, US2011010978 AA, US2010024274 AA, US2006236583 AA, US2005268518 AA, US1680186 A, US1367996 A, IL201629 A0, IL201628 A0, FR1228795 A, CA2631979 AA, CA2631979 AA,

Forward Citations: WO15069327, WO14180574, WO14041382, WO14041382, USD853516, USD792937, USD792936, USD791903, USD758519, USD732629, USD724689, USD702797, US9995544, US9989330, US9927207, US9821448, US9746283, US9733043, US9546843, US9500439, US9441898, US9423209, US9328991, US9297613, US9291413, US9273926, US9267759, US9239207, US9194654, US9194636, US9157691, US8997391, US8950100, US8468734, US8191301, US2018112945, US2016102938, US2016061562, US2015233663, US2015184959, US2015121734, US2014083060, US2013247440, US2013180152, US2012198744, US2011154710, US10627189, US10443972, US10429145, US10371478, US10365059, US10281225, US10274272, US10161729, US10161696, US10119779, TWI436025, JP6194102, JP2016521344, EP2994715, EP2895815, EP2631587, EP2631587, EP2314976, DE102016107806, DE102013008091, CN104111005, CN104111005,

Abstract:
A handgun converter enclosing a handgun and allowing the user to operate the handgun with full and increased functionality and enhanced safety. The combined weapon endows the handgun with increased stability and accuracy due to additional supports, versatility by adding rails, and with an additional mechanical latch mechanism supporting safe use. The handgun converter is constructed to allow quick mounting and release of the handgun, to enhance weapon versatility.

3) Family number: 74148055 (US10274272B)

© PatBase

Title: FIREARM SLIDE ASSIST DEVICEOMA 4260

Priority: US20180117747 20180830

Family:

Publication number	Publication date	Application number	Application date
US10274272 BA	20190430	US20180117747	20180830

Probable Assignee: OWENSBY MARK A

Assignee(s):(std)**:** OWENSBY MARK A

Inventor(s):(std)**:** OWENSBY MARK A

Agent(s): FISHEL GRACE J

International class (IPC 8-9): F41A3/72 (Advanced/Invention)

CPC: F41A3/72

Classification Explorer

Cited documents: US9995544 BA, US9733043 BA, US9523545 BA, US9500439 BA, US9194636 BB, US9121662 BA, US8549785 BB, US8438774 BB, US8348774 BB, US8156854 BB, US6857381 BB, US6722303 BB, US6505384 BA, US6178604 BA, US6019018 A, US5852853 A, US4995295 A, US4843687 A, US4827652 A, US4823671 A, US4702144 A, US3265032 A, US2505517 A, US2017321977 AA, US2016102938 AA, US2016061562 AA, US2015354909 AA, US2015184959 AA, US2015121734 AA, US2014298703 AA, US2013255478 AA, US2013180152 AA, US2013111799 AA, US2013081318 AA, US2012198744 AA, US2011283587 AA, US2011154710 AA, US2011088539 AA, US2011010978 AA, US2007137003 AA, US2003075037 AA, US1989448 A, US1680186 A, US10054380 BA, US10054380 B1,

Abstract:
A firearm slide assist device is disclosed with a handle having a grasping end and a cam end with an upper tine and a lower tine. The firearm slide assist device further includes a securing arm for connection to the cam end, and a fastening device for fastening the securing arm within the upper tine and the lower tine of the cam end.

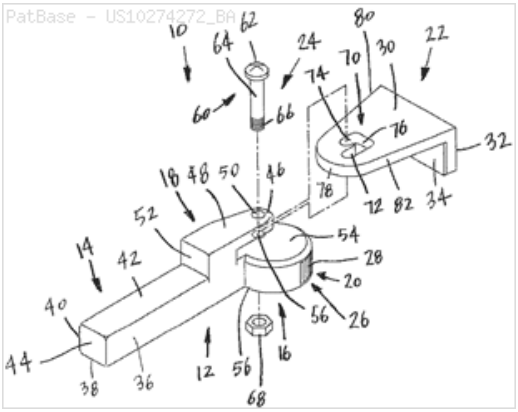

4) Family number: 60886066 (US9194654B)

© PatBase

Title: WING AND RIDER

Priority: US20150623060 20150216 US20150830230 20150819

Family:

Publication number	Publication date	Application number	Application date
US9194654 BA	20151124	US20150623060	20150216
US9291413 BA	20160322	US20150830230	20150819

Probable Assignee: VIANI ARTHUR J

Assignee(s):(std)**:** VIANI ARTHUR J

Inventor(s):(std)**:** VIANI ARTHUR J

Agent(s): ALBERT; ALBERT BORDAS PA

International class (IPC 8-9): F41A3/72 F41C23/10 F41C27/00 (Advanced/Invention)

CPC: F41A3/72 F41C27/00

US class: 1/1

Classification Explorer

Cited documents: USD259432 S1, US6775940 BB, US6726072 BB, US6264079 BA, US6155468 A, US5881938 A, US5630535 A, US5275084 A, US5166459 A, US3397475 A, US3156059 A, US2320450 A, US2015121734 AA, US2014298703 AA, US2014047753 AA, US2013327798 AA, US2013111799 AA, US2012198744 AA, US2011154710 AA, US2011107642 AA, US2011088539 AA, US2003178455 AA, US1680186 A,

Forward Citations: USD854642, USD791903, USD761374, US9995544, US9982966, US9903685, US9746283, US9733043, US9677847, US9664471, US9546843, US9500439, US9423209, US2019195582, US2019154398, US2018195819, US2017184376, US2016102938, US2016061562, US2016040957, US10465999, US10443974, US10222173, US10054380,

Abstract:
A wing and rider for firearms having a wing assembly. The wing assembly has an exterior face and an interior face defined by a top edge, a bottom edge, and first and second lateral edges. Protruding from the interior face is an insert shaped to fit into an opening of a firearm slide. The exterior face has a first predetermined width defined by the first and second lateral edges. Extending from the first and second lateral edges are first and second sidewalls having gripping means. The firearm slide has third and fourth sidewalls that define a second predetermined width. The first predetermined width is greater than the second predetermined width. The gripping means includes ridges, channels, protrusions, hatched sections, grooves, or any combination thereof. The wing and rider for firearms may further have a rider assembly configured and shaped to secure the firearm.

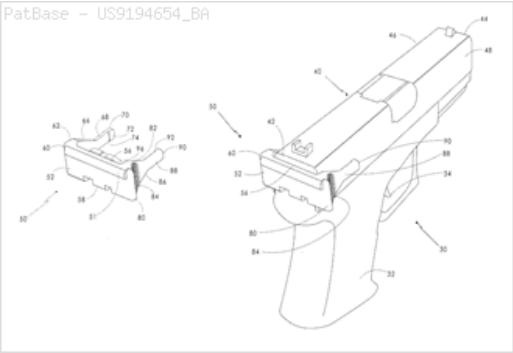

5) Family number: 59628079 (US2015184959A)

Title:	APPARATUS AND METHOD FOR ACTUATING A SLIDE MECHANISM FOR A SEMI-AUTOMATIC PISTOL
Priority:	US20130922295P 20131231 US20140583906 20141229

Family:

Publication number	Publication date	Application number	Application date
US2015184959 AA	20150702	US20140583906	20141229
US9157691 BB	20151013	US20140583906	20141229

Probable Assignee:	PUF LLC
Assignee(s):(std):	P U F LLC ; PARNELL JOHN E
Assignee(s):	PUF ; PUF LLC
Inventor(s):(std):	PARNELL JOHN E
Agent(s):	TREGO HINES AND LADENHEIM PLLC
International class (IPC 8-9):	F41A3/72 F41A35/00 F41A7/00 (Advanced/Invention)
CPC:	F41A3/72 F41A7/00 F41A35/00 F41C3/00
US class:	1/1 89/1.4

Classification Explorer

Cited documents:	US5275084 A, US4823671 A, US4298150 A, US4138044 A, US4043065 A, US2015020428 AA, US2014298703 AA, US2013255478 AA, US2013180152 AA, US2012198744 AA, US2011088539 AA, US2010170923 AA, US2006053674 AA,
Forward Citations:	US9995544, US9791226, US9733043, US9546843, US9500439, US9494377, US9423209, US9194636, US2016102938, US2015300776, US2015233663, US2013255478, US10429145, US10274272, US10161696, US10054380,

Abstract:
An apparatus configured to aid a user in actuating a slide mechanism of a semi-automatic pistol is disclosed. The apparatus includes a first side portion connected to a second side portion by a top portion extending therebetween, a tunnel configured to receive the slide mechanism therein and extend a length of the apparatus from a first end portion to a second end portion, and a flange configured to rest against an end of the slide mechanism to provide a pushing force on the end when a user actuates the slide mechanism.

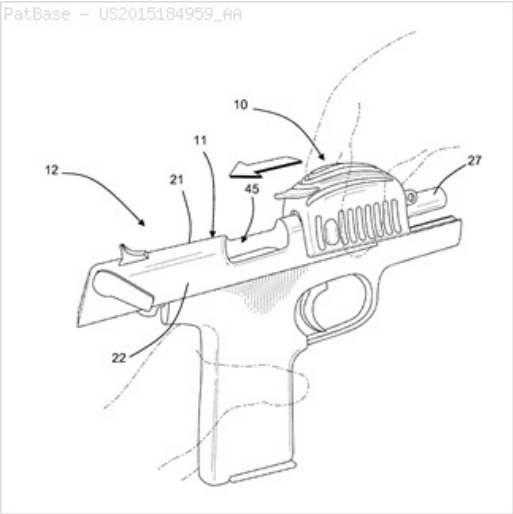

6) Family number: 60150079 (US2015233663A)

Title:	FIREARM ATTACHMENT APPARATUS FOR DRY FIRE TRAINING
Priority:	US20140942250P 20140220 US20140582162 20141223

Family:

Publication number	Publication date	Application number	Application date
US2015233663 AA	20150820	US20140582162	20141223

Probable Assignee:	KIEHN JONATHAN RAY

Assignee(s):(std): KIEHN JONATHAN RAY

Inventor(s):(std): KIEHN JONATHAN RAY

International class (IPC 8-9): F41A33/06 (Advanced/Invention)

CPC: F41A33/00 F41C33/001

US class: 42/90

Classification Explorer

Cited documents: US6561073 BA, US4807512 A, US2015184959 AA, US2015121734 AA, US2014298703 AA, US2011154710 AA, US2011088539 AA, US2011010978 AA, US1989448 A, US1680186 A, DE611434 A,

Forward Citations: US9995544, US9733043, US9664471, US9354014, US9354004, US2016018181, US2015253105, US10222150, US10161696,

Abstract:
This disclosure describes a firearm attachment and apparatus for more effectively dry-firing a firearm device during marksmanship training. The firearm attachment includes a coupling portion that is configured to fixedly couple the firearm attachment to a slidable member (e.g., a slide of a pistol or a charging handle of a rifle) of the firearm device, and a tethering aperture that is positioned at a distal end of firearm attachment, relative to the coupling portion. When the firearm attachment is coupled to the firearm device via the coupling portion, and a rearward force is applied at the tethering aperture, the firearm attachment pulls the slidable member of the firearm device into a set position for dry-firing the firearm device. The rearward force can be applied by a sling apparatus that attaches to or through the tethering aperture of the firearm attachment.

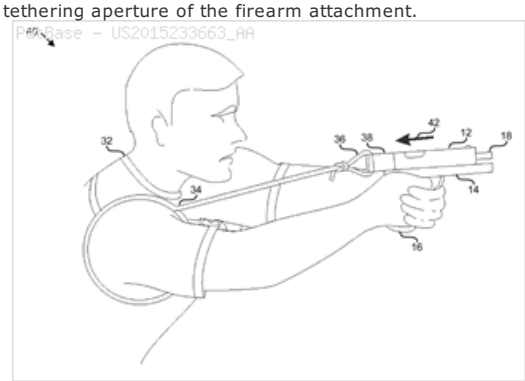

7) Family number: 54906122 (US2013255478A) © PatBase

Title: HANDGUN CHARGING SYSTEM

Priority: US20120433837 20120329

Family:

Publication number	Publication date	Application number	Application date
US2013255478 AA	20131003	US20120433837	20120329
US9194636 BB	20151124	US20120433837	20120329

Probable Assignee: GUNSANDMOREINFO LLC

Assignee(s):(std): GUNSANDMORE INFO LLC ; MCANINCH CHRIS

Assignee(s): GUNSANDMOREINFO LLC

Inventor(s):(std): MCANINCH CHRIS

Agent(s): BRETT J

International class (IPC 8-9): F41A19/39 F41A19/52 F41A7/00 F41A7/02 F41C27/00 (Advanced/Invention)

CPC: F41A7/00 F41A19/39 F41A19/52 F41C27/00

US class: 1/1 89/1.4

Classification Explorer

Cited documents: US8312803 BB, US6561073 BA, US6493978 BA, US6318014 BA, US4823671 A, US4467698 A, US4298150 A, US4138044 A, US4055015 A, US4043065 A, US3763587 A, US2015184959 AA, US2011283587 AA, US2011154710 AA,

Forward Citations: USD850558, US9995544, US9546843, US9500439, US9423209, US9239207, US9157691, US2016102938, US2015184959, US2015121734, US10274272, US10161696, US10054380,

Abstract:
A system and method for charging a handgun. A body is frictionally fit over the slide of a handgun and placed against a hard surface. The grip of the handgun is depressed, thereby retracting the slide and ejecting any spent cartridge. As pressure on the grip is released, the recoil spring forces the slide forward relative to the frame of the handgun, stripping a cartridge from the magazine and inserting the cartridge into the barrel of the handgun. The body is then removed from the slide and the handgun may be fired. The body is configured to fit into frictional mating engagement with the slide and allow the barrel of the handgun to extend into a cavity in the body as the slide is retracted relative to the frame of the handgun.

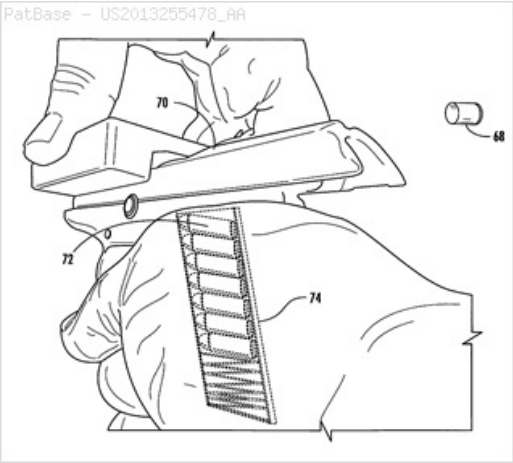

8) Family number: 18241145 (US1367996A)

© PatBase

Title:	Automatic rifle
Priority:	US19190300640 19190529
Family:	

Publication number	Publication date	Application number	Application date
US1367996 A	19210208	US19190300640	19190529

Probable Assignee:	WLADYSLAW SUSSMAN
Assignee(s):(std)**:**	WLADYSLAW SUSSMAN
Inventor(s):(std)**:**	WLADYSLAW SUSSMAN
Inventor(s):	SUSSMAN WLADYSLAW
International class (IPC 8-9):	F41A19/09 F41A9/53 F41C23/12 (Advanced/Invention); F41A19/00 F41A9/00 F41C23/00 (Core/Invention)
International class (IPC 1-7):	F41D3/02
CPC:	F41A9/53 F41A19/09 F41C23/12
European class:	F41A19/09 F41A9/53 F41C23/12
US class:	42/69.01 42/72
Classification Explorer	
Forward Citations:	USD476393, USD476392, US9869524, US8887432, US8819975, US8205374, US6318014, US4677781, US3641694, US2017045330, US2011088305, US2010186276, US2010154272, US2009211140, US10627189,

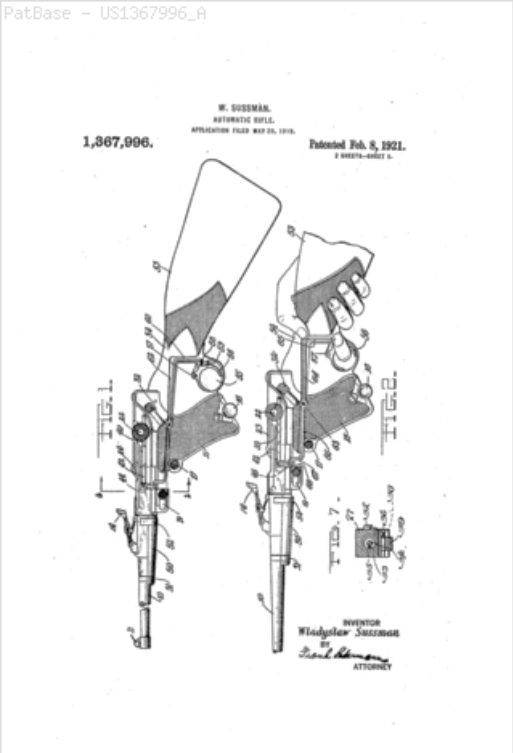

9) Family number: 7577233 (US4176584A)

Title: Slide locking mechanism for magazine-fed firearms

Priority: US19780917417 19780621

Family:

Publication number	Publication date	Application number	Application date
US4176584 A	19791204	US19780917417	19780621

Probable Assignee: THOMAS FRANK S JR

Assignee(s):(std)**:** THOMAS FRANK S JR

Inventor(s):(std)**:** THOMAS FRANK S JR

International class (IPC 8-9): F41A17/38 F41A3/38 (Advanced/Invention); F41A17/00 F41A3/00 (Core/Invention)

International class (IPC 1-7): F41D11/06

CPC: F41A3/38 F41A17/38

European class: F41A17/38 F41A3/38

US class: 89/138 89/148 89/190 89/196

Classification Explorer

Cited documents: US2115041 A, US1176254 A, GB191018363 A,

Forward Citations: WO19087034, USD712615, US9546831, US9448023, US9435592, US9207032, US9057574, US8887432, US8312803, US8087344, US7895933, US7047864, US6907814, US6415702, US6374526, US5808229, US4594935, US4555973, US2017276444, US2015027020, US2014196337, US2011088539, US2011088305, US2008086926, US2006266209, US2005188592, US10612876, US10584930, US10378838, US10345064, US10302380, US10281225, US10267581, US10254063, CZ306500,

Abstract:
In a magazine-fed firearm having its barrel fixed to the frame and having a slide reciprocably mounted to the frame, with resilient means positioned between the slide and the frame urging the slide toward the muzzle, a lever rotatably mounted to the frame releasably engages notches formed in the slide, delaying opening of the breech momentarily after each firing to allow the internal gas pressure to reach a safe level, and retaining the slide with the breech open to signal the firing of the last cartridge. A resiliently biased plunger on the frame restrains the lever against rotation into and out of engagement with the notches.

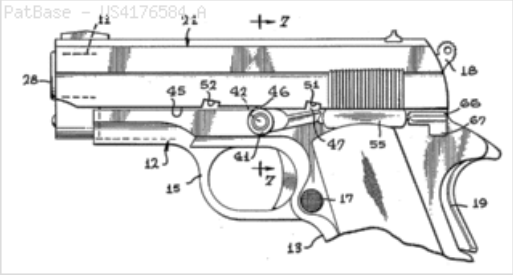

10) Family number: 69434267 (US2018112945A)

Title: FIREARM HAVING A REMOVALBE STRIKER HOUSING

Priority: US20160411195P 20161021 US20170789527 20171020

Family:

Publication number	Publication date	Application number	Application date
US2018112945 AA	20180426	US20170789527	20171020
US10365059 BB	20190730	US20170789527	20171020

Probable Assignee: TAURUS INT MFG INC

Assignee(s):(std)**:** TAURUS INT MFG INC

Inventor(s):(std)**:** SROUFE DUSTIN ; HACK KATHRYN ; MILLER ROBERT ; PEYTON JESSE

Agent(s): DELIO PETERSON AND CURCIO LLC; CURCIO ROBERT

International class (IPC 8-9): F41A11/00 F41A19/30 F41A3/66 F41A3/72 F41C3/00 (Advanced/Invention)

CPC: F41A3/72 F41A11/00 F41A19/30 F41C3/00 F41A3/66

US class: 1/1 89/196

Classification Explorer

Cited documents: US9970726 BA, US989432 A, US9777980 BB, US956431 A, US9021730 BB, US8931394 BB, US8739445 BB, US8065950 BB, US6571501 BA, US6513273 BB, US5581046 A, US3728939 A, US3707794 A, US2016102938 AA, US2016061562 AA, US2012317856 AA, US2012198744 AA, US2011088539 AA, US1680186 A, US1386197 A,

Forward Citations: USD859565, USD855736, USD849868, US2018195819, US10209019,

Abstract:
A pistol having a pistol slide with apertures for receiving finger grips. The finger grips have an attachment scheme for slidably securing a striker housing inside the pistol slide. The striker housing retains a striker and a striker block, such that intricate machining is no longer required on the interior portions of the pistol slide to hold the striker or striker block. The striker housing has a planar protuberance that forms a ridge for being slidably received by corresponding wedges on the finger grip interior portion.

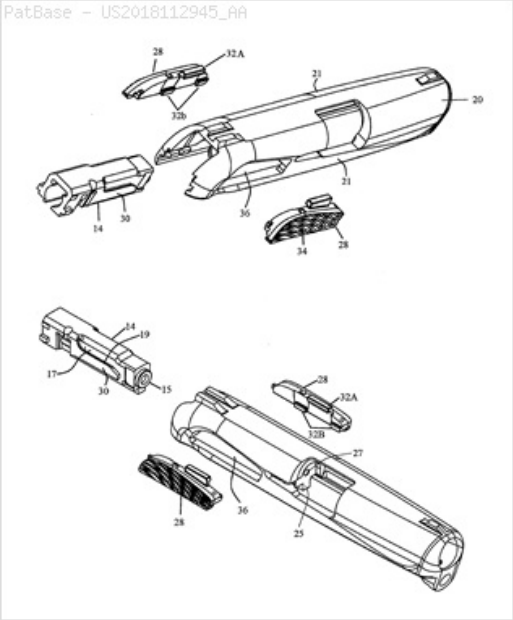

11) Family number: 72575369 (US10161729B)

© PatBase

Title:	PORTABLE IED TRAINING DEVICE
Priority:	US20160054213 20160226

Family:

Publication number	Publication date	Application number	Application date
US10161729 BA	20181225	US20160054213	20160226

Probable Assignee:	US NAVY
Assignee(s):(std)**:**	ANDERSON MICHAEL G ; BOTTRELL ANDREW L ; HUPP MARK R ; US NAVY
Assignee(s):	SECRETARY OF NAVY AS US GOV
Inventor(s):(std)**:**	HUPP MARK R ; BOTTRELL ANDREW L ; ANDERSON MICHAEL G
Agent(s):	SSC PACIFIC PATENT OFFICE; SAMORA ARTHUR K; EPPELE KYLE
International class (IPC 8-9):	F41A33/00 F42B8/04 G09B9/00 (Advanced/Invention)
CPC:	F42B8/04 F41A33/00 G09B9/003 F41H11/13
Classification Explorer	
Cited documents:	US8978561 BA, US7703230 BB, US2011088539 AA,

Abstract:
An IED detection training device can include a barrel which can be adapted to receive a blank ammunition cartridge. A housing can be connected to the barrel, and a firing pin having a tab extending from the firing pin can be disposed in the housing. A spring can surround the firing pin, and a sleeve having a slot can surround the sleeve so that the firing pin tab is disposed in the sleeve slot. A lever can be pivotably attached to the housing so that the lever selectively engages the tab. A pull ring can also be pivotably attached to the housing, to selectively engage the lever. Pivoting of the pull ring can cause pivoting engagement of the lever and disengagement of the tab, which can further cause the spring to move the firing pin forward to strike the ammunition blank cartridge.

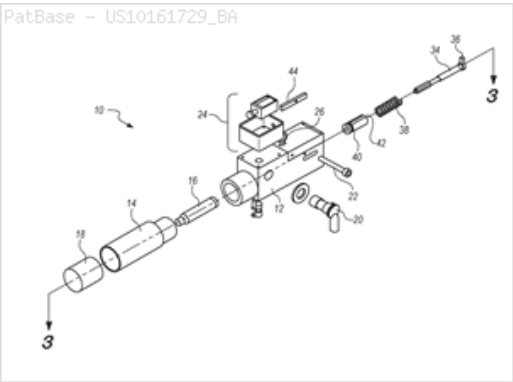

12) Family number: 44003375 (US2009282718A)

© PatBase

Title:	ADAPTER DEVICE FOR COUPLING AN AUXILIARY STOCK TO A HANDGUN
Priority:	CA20082631979 20080513

Family:

Publication number	Publication date	Application number	Application date
CA2631979 AA	20091113	CA20082631979	20080513
US2009282718 AA	20091119	US20090436182	20090506

Probable Assignee: BARTLEY MICHAEL LYNDON

Assignee(s):(std)**:** BARTLEY MICHAEL LYNDON

Inventor(s):(std)**:** BARTLEY MICHAEL LYNDON

Agent(s): ADE AND CO INC

International class (IPC 8-9): F41A99/00 F41C23/12 (Advanced/Invention); F41A99/00 F41C23/00 (Core/Invention)

CPC: F41C23/12 F41G11/003

European class: F41C23/12 F41G11/00B4

US class: 42/75.03

Classification Explorer

Cited documents: US6591533 BB, US6367187 BB, US6318014 BA, US5778588 A, US5351428 A, US5092070 A, US4271623 A, US3861273 A, US3685194 A, US3641694 A, US3609902 A, US3256632 A, US3100357 A, US28433 A, US2683948 A, US1877016 A, US1755034 A, US1477445 A, US1016695 A,

Forward Citations: WO13132291, USD877278, USD877277, USD877276, USD876568, USD876567, USD870837, USD870836, USD868923, USD849869, USD829292, USD815233, USD812708, USD809621, USD794740, USD789476, USD773593, USD773592, USD773591, USD773590, USD772367, USD731023, USD726861, USD725220, USD725219, USD725213, USD724688, USD673238, USD636047, US9989330, US9933232, US9927207, US9777983, US9322626, US9297613, US9273926, US8950100, US8887432, US8448366, US8281698, US8156677, US2018266788, US2017082393, US2016084610, US2013220295, US2011107644, US2011023694, US2010263254, US10627189, US10443972, US10330432, EP2633258, EP2631587, EP2631587, EP2314976, EP2314976, CN104111005, CN104111005,

Abstract:
An adapter device comprises a mounting frame arranged to be mounted onto a handgun and a stock mount arranged to support an auxiliary stock on the mounting frame. The stock mount allows interchangeable use of existing commercially available stocks to be used with a handgun.

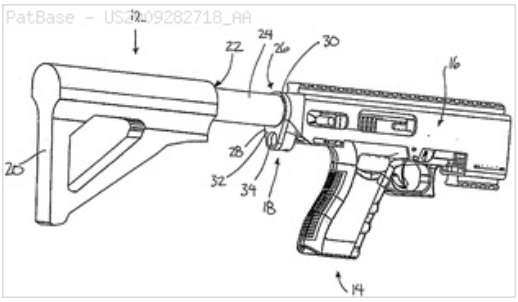

13) Family number: 75202383 (US2019226797A)

© PatBase

Title: PISTOL CHASSIS AND FIREARM APPARATUS

Priority: US20180620886P 20180123 US20180620907P 20180123 US20190252791 20190121 US20190253176 20190121

Family:

Publication number	Publication date	Application number	Application date
US2019226797 AA	20190725	US20190252791	20190121
US2019226798 AA	20190725	US20190253176	20190121
US10627189 BB	20200421	US20190253176	20190121

Probable Assignee: FAIFER SAGI

Assignee(s):(std)**:** FAIFER SAGI

Inventor(s):(std)**:** FAIFER SAGI

Agent(s): LAW OFFICE OF ARTHUR M ANTONELLI PLLC

International class (IPC 8-9): F41A3/72 F41C23/04 F41C23/12 F41C27/22 F41C33/00 (Advanced/Invention)

CPC: F41A3/72 F41C23/04 F41C23/12 F41C27/22 F41C33/001

Classification Explorer

Cited documents: USD801467 S1, USD792937 S1, USD792936 S1, USD785744 S1, USD780279 S1, USD774618 S1, USD764622 S1, USD716406 S1, USD706896 S1, USD683808 S1, USD631122 S1, USD411280 S1, USD400954 S1, USD231828 S1, US9746283 BB, US9696110 BB, US9664477 BA, US9651335 BB, US9631893 BB, US9546843 BB, US9500439 BA, US9459073 BA, US9453699 BA, US9441898 BB, US9354021 BB, US9354012 BB, US931328 A, US914675 A, US899617 A, US8887432 BB, US8869444 BB, US8776421 BA, US8677669 BA, US8549783 BB, US8448366 BB, US8438771 BA, US8205374 BB, US8191301 BB, US816074 A, US815609 A, US8109026 BA, US8091264 BB, US8061072 BA, US8051596 BA, US7992336 BB, US7909301 BB, US7849626 BB, US7698848 BA, US7637882 BB, US7552557 BA, US7437847 BA, US7398616 BA, US723545 A, US7197844 BB, US7065914 BA, US7059502 BB, US7028427 BB, US6920713 BA, US6829856 BA, US681392 A, US6789344 BB, US6729061 BA, US6678986 BB, US6634128 BA, US6560911 BB, US6367187 BB, US6324728 BA, US632098 A, US6318014 BA, US6267335 BA, US6250009 BA, US6161741 A, US6112448 A, US6070809 A, US6055760 A, US6016620 A, US593890 A, US5930933 A, US5930931 A, US5924233 A, US5852253 A, US5819461 A, US5778589 A, US5778588 A, US5761842 A, US570145 A, US562487 A, US5528846 A, US5479736 A, US5445479 A, US5379179 A, US5351428 A, US5180874 A, US517555 A, US5092070 A, US5056253 A, US5018294 A, US4989358 A, US4858359 A, US4843749 A, US4790095 A, US4788785 A, US4776124 A, US4735008 A, US4735007 A, US4674472 A, US4660311 A, US4640036 A, US46365 A, US461480 A, US4601123 A, US4579037 A, US4515301 A, US4513523 A, US4398365 A, US4397112 A, US4321765 A, US4296566 A, US4291482 A, US4271623 A, US4196742 A, US3861273 A, US3857323 A, US3798818 A, US3793759 A, US3782019 A, US3740886 A, US3685194 A, US3648396 A, US3641694 A, US3609902 A, US3553878 A, US3442042 A, US3388494 A, US3369316 A, US3235997 A, US3209481 A, US3200528 A, US32003 A, US3184877 A, US3162966 A, US3100357 A, US305537 A, US3011283 A, US287741 A, US2873902 A, US28433 A, US2789742 A, US2683948 A, US2611204 A, US2539008 A, US2495977 A, US2456280 A, US2441487 A, US2439137 A, US2433151 A, US2424194 A, US2293128 A, US22626 A, US223926 A, US2139691 A, US202946 A, US2019195595 AA, US2019063869 AA, US2019041156 AA, US2019017777 AA, US2018224234 AA, US2018216907 AA, US2018058794 AA, US2017248385 AA, US2017153084 AA, US2017082389 AA, US2016282084 AA, US2016265872 AA, US2015285577 AA,

US2014182181 AA, US2014144061 AA, US2014053447 AA, US2013185975 AA, US2013167424 AA, US2013134286 AA, US2012266513 AA, US2012131829 AA, US2011154710 AA, US2011131861 AA, US2011107644 AA, US2011030258 AA, US2010154272 AA, US2010084524 AA, US2009282718 AA, US2009049731 AA, US2009038200 AA, US2008060247 AA, US2007017138 AA, US2005262753 AA, US2005235546 AA, US2005115140 AA, US2002078617 AA, US2002007579 AA, US1877016 A, US1680186 A, US1671281 A, US1606609 A, US1569901 A, US1557865 A, US1554556 A, US1519123 A, US1497794 A, US1477445 A, US1452123 A, US1431058 A, US1371899 A, US1367996 A, US1340127 A, US1315215 A, US1283015 A, US1276572 A, US1266633 A, US1266632 A, US1260285 A, US1222264 A, US1206234 A, US1196822 A, US1195055 A, US1150763 A, US1111905 A, US1027556 A, US1016695 A, US10165765 BA,

Abstract:
A pistol chassis is disclosed which may include a lower housing, an upper housing, a proximal enclosure, a distal sleeve, and a proximal accessory. The distal sleeve, lower housing, and upper housing may be secured together to form a tubular member for receiving a pistol. The lower housing further may include a distal segment, a proximal segment and an intermediate segment. Time distal segment may include a pistol frame receptacle and a trigger guard enclosure. The proximal accessory may be a folding stock. The pistol chassis may house a pistol to produce a firearm apparatus.

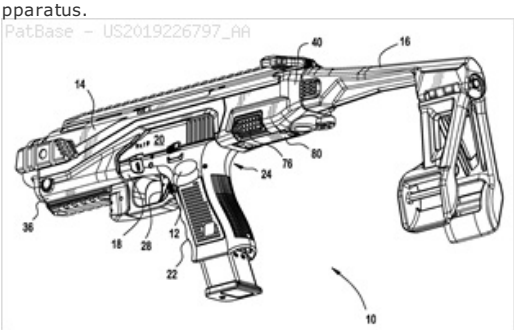

14) Family number: 67369390 (US2019093983A)

© PatBase

Title: SELF-LOADING PISTOL

Priority: DE201610107806 20160427 WO2017EP59962 20170426

Family:

Publication number	Publication date	Application number	Application date
DE102016107806 A1	20171102	DE201610107806	20160427
EP3449201 A1	20190306	EP20170720762	20170426
EP3449201 B1	20200415	EP20170720762	20170426
US2019093983 AA	20190328	US20170097207	20170426
WO17186807 A1	20171102	WO2017EP59962	20170426

Probable Assignee: B AND T AG

Assignee(s):(std)**:** B AND T AG

Inventor(s):(std)**:** BRUEGGER KARL

Agent(s): WITTMANN ERNST ULRICH

Designated states: AE AG AL AM AO AT AU AZ BA BB BE BF BG BH BJ BN BR BW BY BZ CA CF CG CH CI CL CM CN CO CR CU CY CZ DE DJ DK DM DO DZ EC EE EG ES FI FR GA GB GD GE GH GM GN GQ GR GT GW HN HR HU ID IE IL IN IR IS IT JP KE KG KH KM KN KP KR KW KZ LA LC LI LK LR LS LT LU LV LY MA MC MD ME MG MK ML MN MR MT MW MX MY MZ NA NE NG NI NL NO NZ OM PA PE PG PH PL PT QA RO RS RU RW SA SC SD SE SG SI SK SL SM SN ST SV SY SZ TD TG TH TJ TM TN TR TT TZ UA UG US UZ VC VN ZA ZM ZW

International class (IPC 8-9): F41A3/66 F41C23/04 F41C23/12 (Advanced/Invention)

CPC: F41C27/00 F41A3/66 F41C23/04 F41C23/12

US class: 1/1

Classification Explorer

Cited documents: WO16036863 A1, US2015316346 AA, US2011107644 AA, US2011107644 AA, US2009277066 AA, TWM281163 Y, TWM281163 Y, KR20110004858 U, KR20110004858 U, HU0203982 AB, EP2314976 A2,

Abstract:
A self-loading pistol including a frame which has on its upper side a carriage guide extending in a longitudinal direction. The carriage guide at least partially receives and/or guides a carriage and a tube having a cartridge chamber. The tube is at least partially inside the carriage. The carriage can be moved in the carriage guide between front end and rear end positions. The carriage closes the tube in the front end position and opens the tube in at least the rear end position. The frame has a carriage catch lever to lock the carriage, a trigger device movable relative to the frame, and a handle piece having a magazine shaft. A receiving device receives the carriage at least partially in the rear end position. A shoulder support can be connected to the receiving device via a holding device.

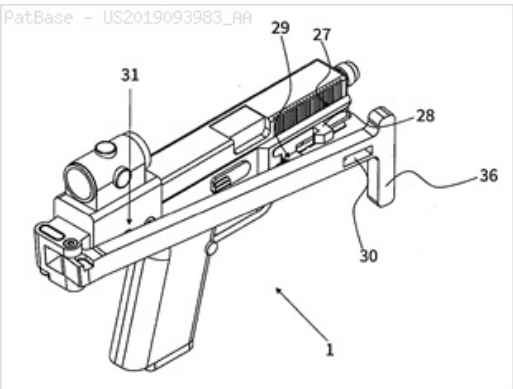

15) Family number: 64042398 (US9500439B) © PatBase

Title: DEVICE FOR ASSISTING WITH MOVEMENT OF A PISTOL SLIDE

Priority: US20150925185 20151028

Family:

Publication number	Publication date	Application number	Application date
US9500439 BA	20161122	US20150925185	20151028

Probable Assignee: DIETRICH MARTIN WAYNE

Assignee(s):(std)**:** DIETRICH MARTIN WAYNE ; DIETRICH ROBIN NATHANIEL

Inventor(s):(std)**:** DIETRICH MARTIN WAYNE ; DIETRICH ROBIN NATHANIEL

Agent(s): ANTHONY D

International class (IPC 8-9): F41A3/72 F41A7/00 F41A9/53 F41C27/00 F41C3/00 (Advanced/Invention)

CPC: F41C27/00 F41A3/72 F41A7/00

Classification Explorer

Cited documents: US9328991 BB, US9297613 BB, US9291413 BA, US9267759 BB, US9239207 BB, US9194654 BA, US9194636 BB, US9157691 BB, US9121662 BA, US8887432 BB, US885436 A, US8549785 BB, US8468734 BB, US8438774 BB, US8312803 BB, US8191301 BB, US8015741 BB, US6561073 BA, US4823671 A, US4298150 A, US4138044 A, US4043065 A, US2744448 A, US2016102938 AA, US2016061562 AA, US2015354909 AA, US2015184959 AA, US2015121734 AA, US2014298703 AA, US2014047753 AA, US2013327798 AA, US2013255478 AA, US2013180152 AA, US2013111799 AA, US2013081318 AA, US2012198744 AA, US2012131829 AA, US2011283587 AA, US2011154710 AA, US2011107644 AA, US2011088539 AA, US2011010978 AA, US2010170923 AA, US2004200109 AA, US1680186 A,

Forward Citations: USD850558, USD817435, USD808492, USD808491, USD799631, USD798983, US9995544, US9791226, US10627189, US10345066, US10274272, US10161696, US10054380,

Abstract:
A device for use with a pistol having a slide, said device configured to assist with racking the slide by providing a body configured to removably interface with the slide, said body providing improved means for maintaining a grip and providing improved leverage, thereby allowing the slide to be more easily moved in a rearward direction.

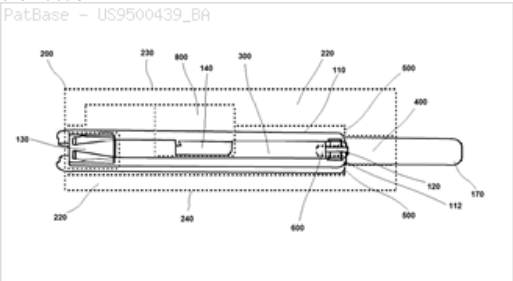

16) Family number: 65468409 (US2018328683A) © PatBase

Title: SELF-LOADING PISTOL WITH SELECTIVE SLIDE LOCK DELAYING THE OPENING MOVEMENT DURING FIRING BUT FACILITATING MANUAL COCKING

Priority: CZ20150000782 20151105 EP20160805500 20161018 WO2016IB56246 20161018

Family:

Publication number	Publication date	Application number	Application date
CA3003087 AA	20180424	CA20163003087	20161018
CZ20150782 A3	20170215	CZ20150000782	20151105
CZ306500 B6	20170215	CZ20150000782	20151105
DE602016020554 D1	20191002	DE201660020554T	20161018
EP3371541 A1	20180912	EP20160805500	20161018
EP3371541 B1	20190911	EP20160805500	20161018
SI3371541 T1	20200228	SI20160030545T	20161018
TR201918378 T4	20191223	TR20190018378T	20161018
US2018328683 AA	20181115	US20160770894	20161018
US10281225 BB	20190507	US20160770894	20161018
WO17077412 A1	20170511	WO2016IB56246	20161018

Probable Assignee: SHAMRAI VIKTOR

Assignee(s):(std)**:** SHAMRAI VIKTOR

Assignee(s): VIKTOR SHAMRAI

Inventor(s):(std)**:** SHAMRAI VIKTOR

Inventor(s): VIKTOR SHAMRAI

Agent(s): GOWLING WLG CANADA LLP; MUSIL DOBROSLAV; ALTAN ALTUN; DORITY AND MANNING PA

Designated states: AE AG AL AM AO AT AU AZ BA BB BE BF BG BH BJ BN BR BW BY BZ CA CF CG CH CI CL CM CN CO CR CU CY CZ DE DJ DK DM DO DZ EC EE EG ES FI FR GA GB GD GE GH GM GN GQ GR GT GW HN HR HU ID IE IL IN IR IS IT JP KE KG KM KN KP KR KW KZ LA LC LI LK LR LS LT LU LV LY MA MC MD ME MG MK ML MN MR MT MW MX MY MZ NA NE NG NI NL NO NZ OM PA PE PG PH PL PT QA RO RS RU RW SA SC SD SE SG SI SK SL SM SN ST SV SY SZ TD TG TH TJ TM TN TR TT TZ UA UG US UZ VC VN ZA ZM ZW

International class (IPC 8-9): F41A17/00 F41A19/47 F41A21/48 F41A3/36 F41A3/38 F41A3/44 F41A5/02 F41A5/24 F41C3/00 (Advanced/Invention);
F41A19/00 F41A3/00 F41A5/00 F41C3/00 (Core/Invention)

CPC: F41A3/38 F41A5/02 F41A5/24 F41A19/47 F41C3/00 F41A21/488

US class: 1/1 89/179

Classification Explorer

Cited documents: WO10041220 A1, WO10041220 A1, USD712615 S1, US9546831 BB, US9448023 BB, US9207032 BB, US9057574 BB, US8887432 BB, US8312803 BB, US8087344 BB, US7895933 BB, US6907814 BB, US6415702 BA, US6374526 BA, US5808229 A, US4594935 A, US4555973 A, US4176584 A, US2115041 A, US2012048104 AA, US2012048104 AA, US1176254 A, UA63508 A, EP0052083 A1, DE3109730 A1, CZ304686 B6, CZ304686 B6, CZ302650 B6, CZ301336 B6, CZ29030 U1, CZ25812 U1,

Forward Citations: WO19171315, WO19087034, WO19086974, US2018259281, CZ307573, CZ307506,

Abstract:
The invention relates to a self-loading-pistol which comprises a frame (**1**), on which is slidably mounted a slide (**11**) for reciprocating movement, through the front part of which passes a barrel (**9**), which is fixedly and non-movably mounted on the frame (**1**), whereby a recoil spring (**25**) of the slide (**11**) is mounted on the guide (**26**) arranged under the barrel and a mechanism for locking the slide (**11**) during the firing process is arranged in the front portion of the frame (**1**) under the barrel (**9**). The mechanism for locking the slide during shooting comprises a two-armed lever (**16**) arranged swingingly on the axis (**17**), on whose front arm a locking member (**14**) is mounted in a seat (**18**) and on whose rear arm the damping member (**15**) is mounted in a seat (**19**), as well as a two-armed locking spring (**21**), pushing the locking member (**14**) and the damping member (**15**) upwards towards their seats (**18** and **19**), the locking member (**14**) and the damping member (**15**) being situated in the path of the motion of the support plate (**13**) of the slide (**11**). When the trigger is pulled rearwards for shooting, it causes a lever (**37**) to block any pivotal movement of the two-armed lever (**16**) and to retain it in place with its front arm and seat (**18**) in the uppermost position. When the trigger is in its forward rest position, however, the pivotal movement of the two-armed lever (**16**) is not blocked, so that during manual retraction of the slide the front arm of the two-armed lever (**16**) together with the locking member (**14**) in seat (**18**) can be brought out of the path of the motion of the support plate (**13**) with little or no effort.

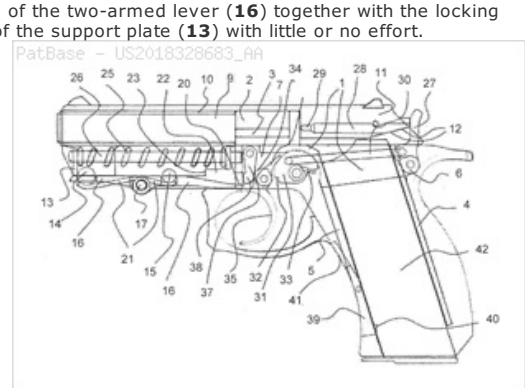

17) Family number: 70042435 (US9995544B)

© PatBase

Title: PISTOL LOADING ASSISTANT

Priority: US20170588580 20170505

Family:

Publication number	Publication date	Application number	Application date
US9995544 BA	20180612	US20170588580	20170505

Probable Assignee: AKIMOV ANDREI FEDOROVICH

Assignee(s):(std)**:** AKIMOV ANDREI FEDOROVICH

Inventor(s):(std)**:** AKIMOV ANDREI FEDOROVICH

International class (IPC 8-9): F41A3/72 F41A9/38 F41C27/00 (Advanced/Invention)

CPC: F41A3/72 F41A9/38 F41C3/00 F41C33/0281

Classification Explorer

Cited documents: US9500439 BA, US9239207 BB, US9194654 BA, US9157691 BB, US8312803 BB, US7543404 BB, US6775940 BB, US4823671 A, US3763587 A, US2016102938 AA, US2015354909 AA, US2015233663 AA, US2015184959 AA, US2015121734 AA, US2013255478 AA, US2013111799 AA, US2011154710 AA, US2011088539 AA, US2007163164 AA,

Forward Citations: US10274272, US10054380,

Abstract:
The present invention relates generally to firearms and devices that allow a shooter to load an automatic pistol inside a locked holster. The problem of existing devices is that they do not allow to load a gun locked inside a holster and with one hand only. The present invention is intended to solve this problem. Pistol Loading Assistant-is a device in the form of an insert for a holster, allowing a shooter to load a pistol when it is in a holster in a locked position with a short move of one hand. A shooter moves pistol slide with device inside a locked holster and loads pistol with a cartridge. Charging hook of device covers safety lever of pistol from one side increasing safety. Device jointed with holster with locking cord and can provide convenient, easy and safe pistol loading with small physical efforts.

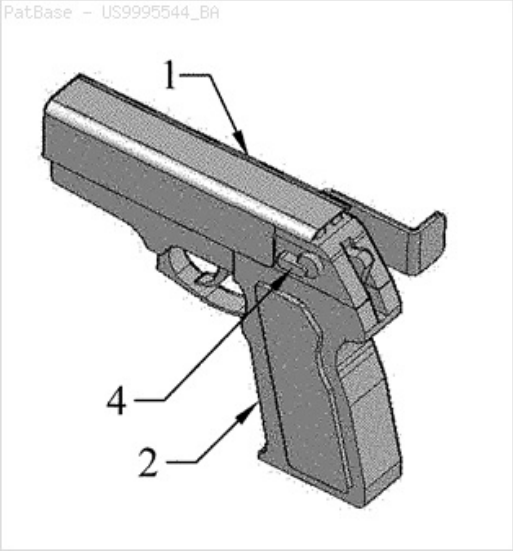

18) Family number: 54599490 (TW201333413A)

© PatBase

Title: ADJUSTABLE OPERATION INTERFACE OF SINGLE OPERATER SHOULDER-LAUNCHED ARTILLERY

Priority: TW20120104957 20120215

Family:

Publication number	Publication date	Application number	Application date
TW201333413 A	20130816	TW20120104957	20120215
TWI436025 B	20140501	TW20120104957	20120215

Probable Assignee: UNIV CHINA SCI AND TECH

Assignee(s):(std)**:** CHINA UNIV OF SCIENCE AND TECHNOLOGY ; UNIV CHINA SCI AND TECH

Inventor(s):(std)**:** CHANG PENG HSIANG ; KUO CHENG LIANG ; KUO CHIN KAI

International class (IPC 8-9): F41A21/00 F41A23/02 (Advanced/Invention)

Classification Explorer

Cited documents: US2011030258, US2010242334, EP2314976, EP0372431, CN201166534, CN101514882,

Abstract:
An adjustable operation interface of a single operater shoulder-launched artillery is mounted on a cylindrical body for firing a rocket projectile therein. The operation interface comprises: a base having a bottom disposed with, from front to back in order, an auxiliary support member, a trigger member, a main support member and a shoulder support member. The auxiliary support member can be switched for use as a front handle or a front fender; the shoulder support member can be switched for use as a shoulder support and a shoulder rest. In addition, with the forward and backward movement of the shoulder support member, a shooter can select a shooting mode most suitable to him/her according to the personal body size and habitual shooting posture, allowing the shooter to utilize the past experience of using other weapons to operate the single operater shoulder-launched artillery of this invention so as to increase the shooting precision.

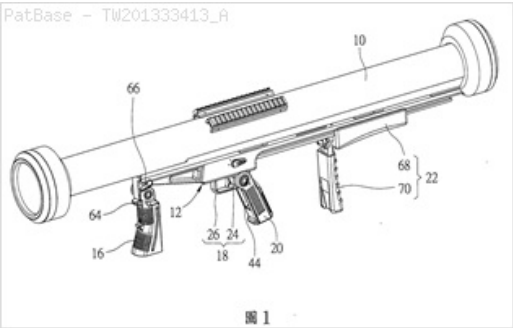

19) Family number: 54631496 (US2014165442A)

© PatBase

Title: SLIDE TAKEDOWN SYSTEM AND METHOD FOR FIREARM

Priority: US20110568783P 20111209 EP20120869462 20121207 US20120708711 20121207 WO2012US68585 20121207

Family:

Publication number	Publication date	Application number	Application date
BR112014013916 A2	20170613	BR20141113916	20121207
BR112014013916 A8	20170613	BR20141113916	20121207
BR112014013916 A8	20170627	BR20141113916	20121207
DE602012047068 D1	20180628	DE201260047068T	20121207
EP2788708 A2	20141015	EP20120869462	20121207
EP2788708 A4	20150624	EP20120869462	20121207
EP2788708 B1	20180530	EP20120869462	20121207
US2014165442 AA	20140619	US20120708711	20121207

US8950100 BB	20150210	US20120708711	20121207
WO13126128 A2	20130829	WO2012US68585	20121207
WO13126128 A3	20131024	WO2012US68585	20121207

Probable Assignee: STURM RUGER AND CO INC

Assignee(s):(std)**:** STURM RUGER AND CO

Assignee(s): STURM RUGER AND CO INC ; STURM RUGER AND CO INC SOUTHPORT

Inventor(s):(std)**:** ZONSHINE AMIR ; NEBEKER DARIN ; MCGARRY JAMES ; DARIN NEBEKER ; AMIR ZONSHINE ; JAMES MCGARRY

Inventor(s): NEBEKER DARIN GILBERT ; ZONSHINE AMIR PHOENIZ ; MCGARRY JAMES PRESCOTT VALLEY

Agent(s): MORELAND DAVID; BELLES GROUP PC; SPANITZ FRANK J

Designated states: AE AG AL AM AO AT AU AZ BA BB BE BF BG BH BJ BN BR BW BY BZ CA CF CG CH CI CL CM CN CO CR CU CY CZ DE DK DM DO DZ EC EE EG ES FI FR GA GB GD GE GH GM GN GQ GR GT GW HN HR HU ID IE IL IN IS IT JP KE KG KM KN KP KR KZ LA LC LI LK LR LS LT LU LV LY MA MC MD ME MG MK ML MN MR MT MW MX MY MZ NA NE NG NI NL NO NZ OM PA PE PG PH PL PT QA RO RS RU RW SC SD SE SG SI SK SL SM SN ST SV SY SZ TD TG TH TJ TM TN TR TT TZ UA UG US UZ VC VN ZA ZM ZW

International class (IPC 8-9): F41A11/00 F41A11/04 F41A17/42 F41A3/64 F41A35/00 F41C27/00 F41C3/00
F41C3/12 (Advanced/Invention);
F41A17/42 (Advanced/Non-invention)

CPC: F41A3/64 F41A11/00 F41A17/42 F41C3/00 Y10T29/49815 F41A35/00

US class: 29/426.1 42/108 42/16 42/70.08

Classification Explorer

Cited documents: US8495832 BB, US8371058 BB, US8245427 BB, US8006609 BB, US7937876 BA, US7823314 BA, US7661219 BA, US7392611 BB, US7343706 BB, US7337571 BB, US7140141 BB, US6993864 BA, US6591536 BB, US6405631 BA, US6266909 BA, US6234059 BA, US6212814 BA, US5753848 A, US5741996 A, US5717156 A, US5669169 A, US5531040 A, US5419069 A, US5272957 A, US5259138 A, US4986163 A, US4986163 A, US4893546 A, US4627184 A, US4361975 A, US4275640 A, US3745881 A, US3620125 A, US3620125 A, US2011162249 AA, US2011162248 AA, US2011126441 AA, US2011126441 AA, US2011088539 AA, US2011061284 AA, US2010319233 AA, US2010319233 AA, US2010313459 AA, US2010313459 AA, US2010300277 AA, US2010269394 AA, US2010170132 AA, US2009282718 AA, US2009199450 AA, US2009071053 AA, US2009071053 AA, US2006249014 AA, US2006064914 AA, US2005257413 AA, US2005188592 AA, US2005115399 AA, US2004244254 AA, US2004244254 AA, US2004007124 AA, US2003066228 AA, US2003066228 AA, US2002116857 AA, US2002116857 AA,

Forward Citations: USD869593, USD855736, USD853517, USD849868, USD846681, USD838802, USD791262, USD758519, USD732629, US9891014, US9658022, US9506726, US9435592, US9291411, US9207032, US8832983, US2017227313, US2016076833, US2015096212, US10605550, US10415905, US10209024, US10209019, US10203172, US10184736, US10054381, US10018434, ES2545229,

Abstract:
A firearm with slide takedown mechanism and method for use is disclosed. In one embodiment, the firearm includes a frame, barrel, trigger and a reciprocating slide. A takedown lever is pivotably mounted to the firearm and engageable with the slide. In a first blocking position, the takedown lever engages and blocks the rearward path of the slide which is not movable beyond a first position. In a second unblocking position, the takedown lever is pivoted laterally outwards from the frame and disengages the slide. The rearward path of the slide is no longer blocked which may be moved to a second rearward removal position enabling a user to remove the slide and field strip the firearm. In one embodiment, the takedown lever is disposed underneath the frame. The firearm may be a semi-automatic pistol in some embodiments.

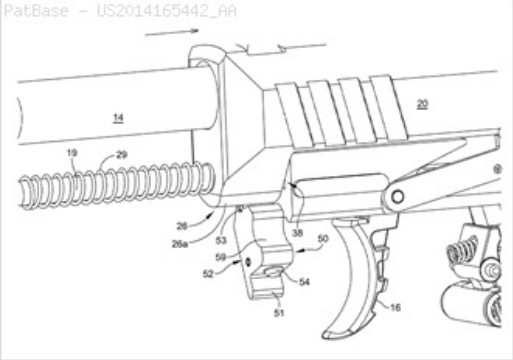

20) Family number: 66625550 (US9733043B) © PatBase

Title: DEVICES AND METHODS FOR IMPROVING THE GRIP OF A SLIDE ASSOCIATED WITH A SEMI-AUTOMATIC WEAPON

Priority: US20160155092 20160516

Family:

Publication number	Publication date	Application number	Application date
US9733043 BA	20170815	US20160155092	20160516

Probable Assignee: COHEN YOSEF

Assignee(s):(std)**:** COHEN YOSEF

Inventor(s):(std)**:** COHEN YOSEF

International class (IPC 8-9): F41A35/06 F41C27/00 F41C3/00 (Advanced/Invention)

CPC: F41C27/00 F41A3/72 F41C3/00

Classification Explorer

Cited documents: USD724689 S1, USD702800 S1, US9423209 BA, US9267759 BB, US9194654 BA, US9157691 BB, US9121662 BA, US8468734 BB, US8312803 BB, US8181378 BB, US8015741 BB, US6775940 BB, US2015354909 AA, US2015233663 AA, US2015184959 AA, US2013180152 AA, US2012198744 AA, US2011289812 AA, US2011154710 AA, US2011088539 AA, US2011010978 AA, US2009258195 AA, US2003134088 AA, US1680186 A,

Forward Citations: US2018195819, US10274272, US10054380,

Abstract:
The invention discloses devices and methods for providing a better grip on a slide associated with a semiautomatic firearm. In some embodiments, a metal frame is covered with a polymer-mineral mixture that includes steps on both a left side and a right side of a slide so as to provide maximal friction between fingers and the slide. The instant invention may aid those with wet or sweaty hands or those form whom racking a pistol is difficult by providing improved gripping features based on shape, materials, and texture of the grip enhancement elements herein described.

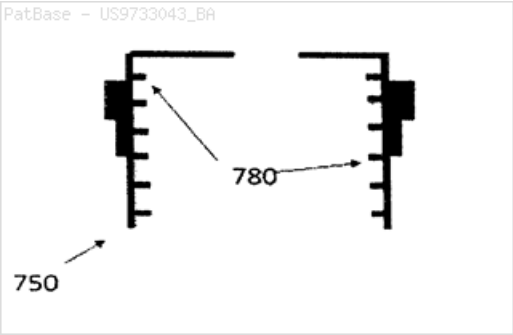

21) Family number: 12145591 (US5448940A)

© PatBase

Title: Gas-operated M16 pistol

Priority: US19930154976 19931119

Family:

Publication number	Publication date	Application number	Application date
US5448940 A	19950912	US19930154976	19931119

Probable Assignee: OLYMPIC ARMS INC

Assignee(s):(std)**:** OLYMPIC ARMS INC

Inventor(s):(std)**:** SCHUETZ ROBERT C E ; SCHUETZ BRIAN D

International class (IPC 8-9): F41A11/02 F41A3/26 F41A5/24 (Advanced/Invention); F41A11/00 F41A3/00 F41A5/00 (Core/Invention)

International class (IPC 1-7): F41A5/24

CPC: F41A3/26 F41A5/24 F41A11/02

European class: F41A11/02 F41A3/26 F41A5/24

US class: 89/128 89/185

Classification Explorer

Cited documents: US5272956 A, US4358986 A, US3742636 A, US3724325 A, US3675534 A, US3618457 A, US3318192 A, US3301133 A, US3236155 A, US3045555 A, US2951424 A, GB613942 A,

Forward Citations: WO9848236, WO13172836, WO12097334, WO12097334, WO07122626, WO07122626, USD671184, USD661364, USD654550, USD637678, USD636454, USD636048, USD636047, USD636046, USD636045, USD636044, US9964369, US9921019, US9915497, US9816546, US9810495, US9777980, US9772150, US9677833, US9658011, US9644908, US9625232, US9562730, US9506711, US9506702, US9488423, US9383154, US9347719, US9291414, US9261314, US9228786, US9217615, US9038525, US9032860, US8973483, US8943947, US8887432, US8819975, US8813406, US8713833, US8677670, US8640598, US8561337, US8443712, US8342075, US8312803, US8286542, US8250964, US8234808, US8176837, US8109194, US8065949, US8061260, US7946214, US7886470, US7874240, US7356958, US7100593, US6625916, US6526683, US6418655, US6079138, US5740626, US5590484, US2013091751, US2012180354, US2012085226, US2012017755, US2011168009, US2011088539, US2011088305, US2011005384, US2010319528, US2010282065, US2010236396, US2010236395, US2010186276, US2006236582, US2006048424, US2004134476, US10598452, US10591245, US10488136, US10415906, US10309739, US10247496, US10240883, TWI530665, EP2663826, CN103518118, CN103518118,

Abstract:
A modified M16 pistol capable of firing rifle cartridges therein in automatic or semi-automatic mode, which pistol is based upon modified M16 upper and lower assemblies, with a pistol barrel, an M16 gas actuation system, and a spring-biased buffer system mounted on top of the M16 upper receiver assembly.

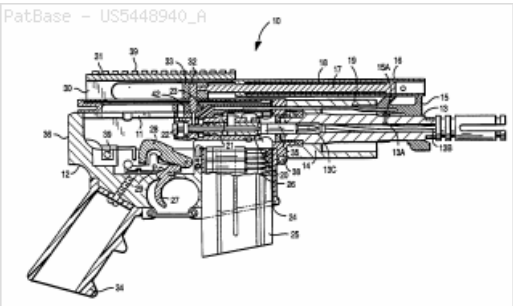

22) Family number: 32397609 (US2005268518A)

© PatBase

Title: HOLSTER WITH ACCESSORIES MOUNTING RAIL

Priority: US20040842480 20040511 US20050109704 20050420 WO2005IL00502 20050511 US20060544929 20061010

Family:

Publication number	Publication date	Application number	Application date

AT450773 E	20091215	AT20050740529T	20050511
CN1985143 A	20070620	CN200580023410	20050511
DE602005018057 D1	20100114	DE200560018057T	20050511
EP1766317 A1	20070328	EP20050740529	20050511
EP1766317 B1	20091202	EP20050740529	20050511
IN07355DN2006 A	20070622	IN2006DN07355	20061206
US2005268518 AA	20051208	US20040842480	20040511
US2006236583 AA	20061026	US20050109704	20050420
US2007251962 AA	20071101	US20060544929	20061010
US7117625 BB	20061010	US20040842480	20040511
US7290688 BB	20071106	US20050109704	20050420
WO05108904 A1	20051117	WO2005IL00502	20050511

Probable Assignee: DOV PIKIELNY

Assignee(s):(std)**:** DOV PIKIELNY ; PIKIELNY DOV

Inventor(s):(std)**:** PIKIELNY DOV ; DOV PIKIELNY

Agent(s): WHITE DUNCAN ROHAN; DEKEL PATENT LTD DAVID KLEIN; DAVID; DEKEL PATENT LTD

Designated states: AE AG AL AM AT AU AZ BA BB BE BF BG BJ BR BW BY BZ CA CF CG CH CI CM CN CO CR CU CY CZ DE DK DM DZ EC EE EG ES FI FR GA GB GD GE GH GM GN GQ GR GW HR HU ID IE IL IN IS IT JP KE KG KM KP KR KZ LC LI LK LR LS LT LU LV MA MC MD MG MK ML MN MR MW MX MZ NA NE NG NI NL NO NZ OM PG PH PL PT RO RU SC SD SE SG SI SK SL SM SN SY SZ TD TG TJ TM TN TR TT TZ UA UG US UZ VC VN YU ZA ZM ZW

International class (IPC 8-9): F41A15/00 F41A21/00 F41C23/02 F41C33/02 F41C33/04 (Advanced/Invention); F41A15/00 F41A21/00 F41C23/00 F41C33/00 (Core/Invention)

International class (IPC 1-7): F41A21/00 F41C33/02

CPC: F41C33/02 Y10S224/911 Y10S224/912 F41C33/0236 F41G11/003 F41C33/0209 F41C33/0254

European class: F41C33/02B F41C33/02D F41C33/02H

US class: 224/163 224/193 224/238 224/243 224/911 224/912 42/106 42/85 42/90

Classification Explorer

Cited documents: US6886725 BB, US6886725 BA, US6698129 BA, US6691445 BB, US6655069 BB, US6267279 BA, US5881486 A, US5875944 A, US5615506 A, US5562459 A, US5166459 A, US5107612 A, US4971236 A, US4921103 A, US2005268518 AA, US2005224537 AA, US2005205621 AA, US2005178808 AA, US2004068913 AA,

Forward Citations: WO07074227, WO07074227, USD882247, USD881557, USD871057, USD840147, USD838475, USD838102, USD828018, USD776424, USD766495, USD759185, USD755334, USD755333, USD755332, USD749843, USD740021, USD735471, USD704791, USD704789, USD704540, USD704040, USD691235, USD677433, USD676920, USD668731, USD667917, USD641548, USD603160, USD603159, USD601339, USD594649, USD589251, USD574147, USD568043, USD567501, US9982966, US9791226, US9777997, US9777986, US9683809, US9664480, US9194652, US9086254, US8887432, US8882292, US8857096, US8851344, US8727556, US8650794, US8631981, US8485686, US8444291, US8307577, US8166694, US7971383, US7934333, US7856749, US7644845, US7543404, US7290688, US2017227324, US2017191794, US2017184376, US2014047755, US2013306691, US2013181021, US2012137566, US2011131859, US2011101063, US2011099879, US2011088305, US2011029009, US2009293334, US2009241397, US2008272162, US2007163164, US2007138219, US2006236583, US2005279790, US10578395, US10466011, US10436550, US10393477, US10386155, US10302390, US10267595, US10254078, US10094637, US10088273, US10066902, US10030934, FR2895495,

Abstract:
A holster with a light rail affixed thereto. The light rail may include a plurality of ridges spaced from one another along a rail axis, the ridges being separated by grooves that are transverse to the rail axis.

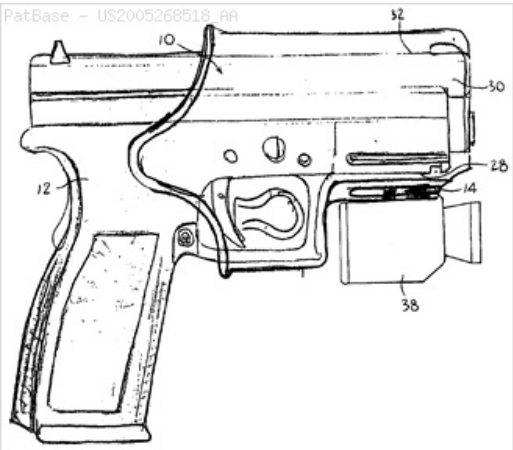

23) Family number: 48165675 (US2011010978A)

Title: CHAMBERING AND TRIGGER SAFETY DEVICE FOR HANDGUN

Priority: US20090505891 20090720

Family:

Publication number	Publication date	Application number	Application date
US2011010978 AA	20110120	US20090505891	20090720
US8015741 BB	20110913	US20090505891	20090720

Probable Assignee: HOOKS DOUGLAS

Assignee(s):(std)**:** HOOKS DOUGLAS

Inventor(s):(std)**:** HOOKS DOUGLAS

Agent(s): MORRISS OBRYANT COMPAGNI PC

International class (IPC 8-9): F41A17/46 F41A19/00 F41A35/00 (Advanced/Invention)

CPC: F41A3/72 F41A17/46 F41A19/39 F41A19/52 F41A35/00

European class: F41A17/46 F41A19/39 F41A19/52 F41A35/00

US class: 42/69.01 42/69.010P 42/70.01 42/70.06 42/70.060S 42/70.11

Classification Explorer

Cited documents: US835349 A, US7266921 BB, US6694659 BB, US6568117 BB, US6561073 BA, US5955696 A, US5910002 A, US5852829 A, US5768819 A, US5458267 A, US5261177 A, US5075994 A, US5033218 A, US4961277 A, US4945665 A, US4914846 A, US4852286 A, US4825576 A, US4807512 A, US4395837 A, US4392318 A, US4047651 A, US3848270 A, US3743147 A, US2538265 A,

Forward Citations: WO15069327, US9746283, US9733043, US9714804, US9546843, US9500439, US9239207, US8887432, US8667725, US8544200, US8347539, US8312803, US2016320155, US2016102938, US2016061562, US2015233663, US2015121734, US2013104437, US2012137559, US2011088539, US2011088305, US10274272, US10054380,

Abstract:
A device for assisting in the chambering of a handgun that can also serve as a safety device for preventing unwanted firing of the handgun is disclosed. The device comprises a slide pull that includes an elongate laterally flexible structure having a first end configured for being releasably coupled to a first side of a slide of a handgun and a second end configured for being releasably coupled to a second side of the slide. A trigger restraint is coupled to the slide pull near a mid-portion thereof. In a first position, the slide pull is configured for being grasped by a user in order to chamber a bullet. In a second position, the trigger restraint is positioned relative to the trigger to prevent movement of the trigger that would otherwise cause the weapon to fire.

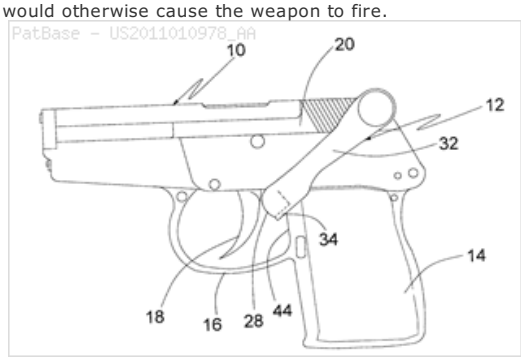

24) Family number: 44322683 (US2010024274A)

© PatBase

Title: HANDGUN SYSTEM

Priority: US20080085765P 20080801 US20090509322 20090724 US20120365164 20120202 US20120655166 20121018

Family:

Publication number	Publication date	Application number	Application date
US2010024274 AA	20100204	US20090509322	20090724
US2012131833 AA	20120531	US20120365164	20120202
US2013133235 AA	20130530	US20120655166	20121018
US8132352 BB	20120313	US20090509322	20090724
US8312658 BB	20121120	US20120365164	20120202
US8713841 BB	20140506	US20120655166	20121018

Probable Assignee: LIPPARD KARL CLARK

Assignee(s):(std)**:** LIPPARD KARL C ; LIPPARD KARL CLARK

Inventor(s):(std)**:** LIPPARD KARL CLARK ; LIPPARD KARL C

Agent(s): HOGAN AND HARTSON LLP; MARTENSEN IP; MICHAEL C

International class (IPC 8-9): F41A17/56 F41A19/12 F41A19/14 F41A21/32 F41A29/04 F41C27/00 F41C3/00 F41G1/00 F41G1/01 F41G1/02 F41G1/12 F41G1/16 (Advanced/Invention);
F41A17/00 F41A19/00 F41A21/00 F41A29/00 F41C27/00 F41C3/00 F41G1/00 (Core/Invention)

CPC: F41A29/04 F41A17/56 F41A19/43 F41A21/325 F41A21/36 F41C27/22 F41G1/02 F41G1/10

European class: F41A17/56 F41A19/43 F41A21/32B F41A21/36 F41A29/04 F41C27/22 F41G1/02 F41G1/10

US class: 42/1.06 42/106 42/111 42/14 42/69.01 42/69.010P 42/69.03 42/70.05 42/70.050P 42/85 42/90 42/97 89/14.3

Classification Explorer

Cited documents: USD611113 S1, USD536054 S1, USD532072 S1, USD435624 S1, USD435281 S1, USD403734 S1, USD328632 S1, US7810269 BB, US7748306 BA, US7698845 BB, US7600338 BB, US7328645 BA, US7194836 BA, US6604445 BB, US6415702 BA, US6412208 BA, US6412206 BA, US6381892 BA, US6341442 BA, US6283006 BA, US6116137 A, US5802757 A, US5563362 A, US5426881 A, US5212327 A, US5166458 A, US5076137 A, US5016382 A, US5016381 A, US4930397 A, US4726136 A, US4715140 A, US4709497 A, US4691614 A, US4651432 A, US4590697 A, US4589327 A, US4429614 A, US4358987 A, US4130958 A, US4023296 A, US4015354 A, US3641676 A, US3411407 A, US3365829 A, US2464010 A, US2345801 A, US2030312 A, US2006150466 AA, US2005229462 AA,

Forward Citations: WO14180574, USD880637, USD877278, USD877277, USD877276, USD876568, USD876567, USD829292, USD827754, USD800243, USD785121, USD784479, USD778389, USD777872, USD777871, USD777283, USD767075, USD760863, USD755327, USD755326, USD726275, USD716899, USD716898, USD716410, USD716397, USD701280, USD687508, USD667525, USD667524, USD667523, USD667522, USD663375, US9964375, US9949055, US9746283, US9736560, US9683813, US9644909, US9551542, US9546832, US9057574, US8887432, US8863433, US8782937, US8713831, US8683729, US8677674, US8671605, US8656631, US8635801, US8635800, US8312803, US2018335269, US2017276444, US2017131053, US2017078775, US2017030682, US2012291326, US2011088539, US2011088305, US10532275, US10436553, US10436538, US10371365, US10302380, US10267581, US10234237, US10222160, US10209033, US10209030, US10132595, US10113836, JP6194102, JP2016521344, EP2994715, EP2466244,

Abstract:
Multiple improvements dramatically increase the reliability and accuracy of a handgun. By combining a plurality of improvements, the accuracy and reliability of a M1911-A1 is dramatically increased. The improvements include a modified sighting system that enables the user to accurately adjust for varying target ranges without losing sight of the targets or altering contact with the weapon. Lubrication notches are incised into the slide/frame interaction regions to prevent fouling. An ambidextrous safety is added that is retained by an interaction with the sear chip shaft. The hammer is modified to provide a region in which foreign matter can migrate to prevent fouling and improve reliability. And the interaction between the sear chip and the hammer is modified to provide a decreased trigger pull that maintains a positive and safe contact between the sear and the hammer at the sear ledge.

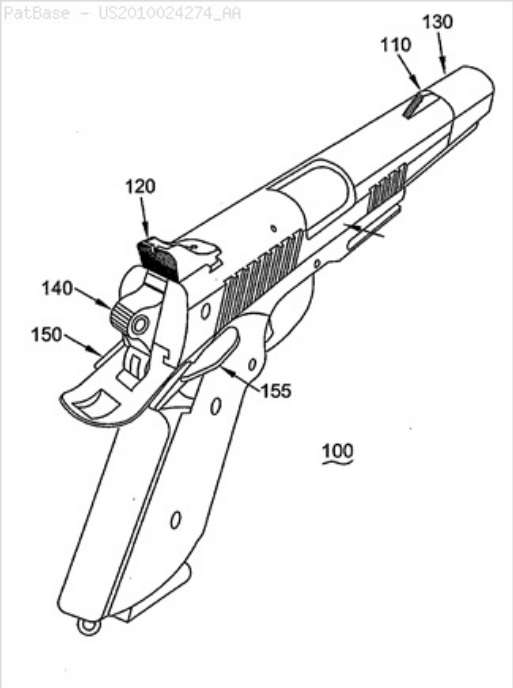

25) Family number: 57790703 (US2016061562A)

© PatBase

Title: COCKING TAB INSERTS AND BREECHBLOCK SLIDES AND FIREARMS INCLUDING THE SAME

Priority: DE201310008091 20130510 EP20140723336 20140509 WO2014EP01252 20140509

Family:

Publication number	Publication date	Application number	Application date
BR112015028093 A2	20170725	BR20151128093	20140509
DE102013008091 A1	20141113	DE201310008091	20130510
DE102013008091 B4	20190529	DE201310008091	20130510
DE502014008812 D1	20180809	DE201450008812T	20140509
EP2994715 A1	20160316	EP20140723336	20140509
EP2994715 B1	20180711	EP20140723336	20140509
HR20181613 T1	20181228	HR20180001613	20181005
JP2016521344 T2	20160721	JP20160512251T	20140509
JP6194102 B2	20170906	JP20160512251T	20140509
US2016061562 AA	20160303	US20150937401	20151110
US9746283 BB	20170829	US20150937401	20151110
WO14180574 A1	20141113	WO2014EP01252	20140509

Probable Assignee: HECKLER AND KOCH GMBH

Assignee(s):(std)**:** HECKLER AND KOCH GMBH

Inventor(s):(std)**:** DANIEL BRAUN ; BRAUN DANIEL

Agent(s): SAMSON AND PARTNER PATENTANWAELTE MBB; YAMAKAWA MASAKI; HANLEY FLIGHT AND ZIMMERMAN LLC; TURI MICHAEL

Designated states: AE AG AL AM AO AT AU AZ BA BB BE BF BG BH BJ BN BR BW BY BZ CA CF CG CH CI CL CM CN CO CR CU CY CZ DE DK DM DO DZ EC EE EG ES FI FR GA GB GD GE GH GM GN GQ GR GT GW HN HR HU ID IE IL IN IR IS IT JP KE KG KM KN KP KR KZ LA LC LI LK LR LS LT LU LV LY MA MC MD ME MG MK ML MN MR MT MW MX MY MZ NA NE NG NI NL NO NZ OM PA PE PG PH PL PT QA RO RS RU RW SA SC SD SE SG SI SK SL SM SN ST SV SY SZ TD TG TH TJ TM TN TR TT TZ UA UG US UZ VC VN ZA ZM ZW

International class (IPC 8-9): F41A3/12 F41A3/72 F41C27/00 F41G1/06 F42C3/00 (Advanced/Invention); F41C27/00 (Advanced/Non-invention)

CPC: F41A3/72 F41C27/00 F41G1/06 F42C3/00

US class: 1/1 42/111 42/90

Classification Explorer

Cited documents: US9546843 BB, US9328991 BB, US9267759 BB, US9194654 BA, US8887432 BB, US8468734 BB, US8312803 BB, US8191301 BB, US6775940 BB, US6493978 BA, US5896850 A, US5735070 A, US5735070 A, US2016102938 AA, US2015121734 AA, US2014298703 AA, US2013283660 AA, US2013180152 AA, US2013111799 AA, US2012198744 AA, US2012198744 AA, US2011154710 AA, US2011088539 AA, US2011010978 AA, US2010024274 AA, US2010024274 AA, US2004200109 AA, US1680186 A, US1680186 A, JP48030079 Y1, JP48030079 Y1, JP48030079 A2, GB2474538 A1, GB2474538 A1,

DE102005053373 A1

DE102005053373 A1

Forward Citations: US9500439, US2018112945, US10627189, US10365059, US10274272, US10054380,

Abstract:
Cocking tab inserts and breechblock slides and firearms including the same are disclosed. An example apparatus includes a breechblock slide; a cocking tab insert removably coupled to the breechblock slide; and a sight removably coupled to the breechblock slide and overlaying the cocking tab insert to substantially prevent the cocking tab insert from being inadvertently removed from the breechblock slide.

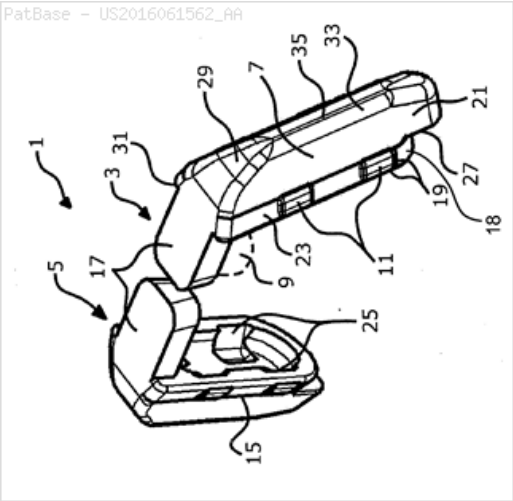

26) Family number: 56017726 (US2015241154A) © PatBase

Title: DEVICE FOR CONVERTING A SEMI-AUTOMATIC SELF-LOADING HANDGUN TO A FULL AUTOMATIC ONE

Priority: HU20120000526 20120913 EP20130836878 20130911 WO2013HU00090 20130911

Family:

Publication number	Publication date	Application number	Application date
DE602013048227 D1	20190103	DE201360048227T	20130911
EP2895815 A2	20150722	EP20130836878	20130911
EP2895815 A4	20160608	EP20130836878	20130911
EP2895815 B1	20181212	EP20130836878	20130911
HU044520 T2	20191028	HU20130836878T	20130911
US2015241154 AA	20150827	US20130428282	20130911
US9441898 BB	20160913	US20130428282	20130911
WO14041382 A2	20140320	WO2013HU00090	20130911
WO14041382 A3	20140508	WO2013HU00090	20130911

Probable Assignee: GLOBSERVER STARTATEGIA ES VEDELEMKUTATS FEJESZTOE KFT

Assignee(s):(std)**:** GLOBSERVER STARTATEGIA ES VEDELEMKUTATS FEJESZTOE KFT ; GLOBSERVER STRATEGIA ES VEDELEMKUTATAS FEJLESZTO KFT ; GLOBSERVER STRATEGIA ES VEDELEMKUTATAS FEJLESZTOE KFT ; ISTVANOVICS MIHALY ; MARJAI MIKLOS BALINT ; MARJAI MIKLOS B LINT

Assignee(s): GLOBESERVER STRATEGIA ES VEDELEMKUTATAS FEJLESZTOE KFT

Inventor(s):(std)**:** ISTVANOVICS MIHALY ; MARJAI MIKLOS BALINT ; MARJAI MIKLOS B LINT

Agent(s): LANTOS MIHALY; FITCH EVEN TABIN AND FLANNERY LLP; DANUBIA PATENT AND LAW OFFICE

Designated states: AE AG AL AM AO AT AU AZ BA BB BE BF BG BH BJ BN BR BW BY BZ CA CF CG CH CI CL CM CN CO CR CU CY CZ DE DK DM DO DZ EC EE EG ES FI FR GA GB GD GE GH GM GN GQ GR GT GW HN HR HU ID IE IL IN IS IT JP KE KG KM KN KP KR KZ LA LC LI LK LR LS LT LU LV LY MA MC MD ME MG MK ML MN MR MT MW MX MY MZ NA NE NG NI NL NO NZ OM PA PE PG PH PL PT QA RO RS RU RW SA SC SD SE SG SI SK SL SM SN ST SV SY SZ TD TG TH TJ TM TN TR TT TZ UA UG US UZ VC VN ZA ZM ZW

International class (IPC 8-9): F41A11/02 F41A19/09 F41A19/10 F41A19/33 F41A19/42 F41A19/46 F41A19/58 F41A5/02 F41A5/10 F41A7/06 F41C23/12 F41C3/00 (Advanced/Invention);
F41A19/33 F41A19/46 F41A5/10 (Advanced/Non-invention)

CPC: F41A5/02 F41A5/10 F41A19/09 F41A19/33 F41A19/46 F41A19/58 F41C23/12

US class: 1/1 89/140

Classification Explorer

Cited documents: US7552557 BA, US7437847 BA, US6543173 BA, US5780762 A, US5780762 A, US4553468 A, US4553468 A, US4532852 A, US4532852 A, US3262440 A, US2016025438 AA, US2016018184 AA, US2015267992 AA, US2013185975 AA, US2012131829 AA, US2012131829 AA, US2012121829 AA, US2011088305 AA, US2011088305 AA, US2010186276 AA, US2010186276 AA, US2009158922 AA, US2009158922 AA, US2008121097 AA, RU2168141 C2, RU2168141 C2, JP3221793 A2, EP1296111 A1, EP1296111 A1,

Forward Citations: US9885531, US2018347930, US10627189, US10520270,

Abstract:
A device for converting a semi-automatic self-loading handgun into a full automatic weapon, wherein the handgun (3) comprises a slide (5) and an own trigger (11) and the handgun (3) is fixed in a front part of a case (2), in which an operating trigger (6) is arranged in a part of the case (2) behind the handgun (3), and the device comprises a means arranged between the operating trigger (6) and the own trigger (11) causing repeated and series activations of the own trigger (11) when the operating trigger (6) is in pulled state.

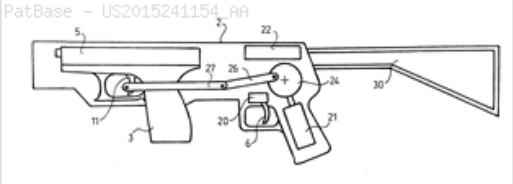

27) Family number: 57981731 (US2014360071A)

© PatBase

Title: FIREARM AND A METHOD FOR LOADING A FIREARM

Priority: US20130986800 20130607 US20160330328 20160906 US20180999864 20180822

Family:

Publication number	Publication date	Application number	Application date
US2014360071 AA	20141211	US20130986800	20130607
US2017051995 AA	20170223	US20160330328	20160906
US2019017766 AA	20190117	US20180999864	20180822
US9494374 BB	20161115	US20130986800	20130607
US10429145 BB	20191001	US20180999864	20180822

Probable Assignee: GARRON JOHN MICHAEL

Assignee(s):(std)**:** GARRON JOHN MICHAEL ; SAVITSKY JEFFRY JEROME

Inventor(s):(std)**:** SAVITSKY JEFFRY JEROME ; GARRON JOHN MICHAEL

Agent(s): JOHN G; CHUPA JOHN G

International class (IPC 8-9): F41A19/47 F41A3/10 F41A3/66 F41A3/72 F41C3/00 (Advanced/Invention); F41C3/00 (Advanced/Non-invention)

CPC: F41A3/66 F41C3/00 F41A3/72 F41A19/47

US class: 1/1 42/16 89/196

Classification Explorer

Cited documents: USD732629 S1, USD702308 S1, USD598065 S1, USD518056 S1, USD503208 S1, US9546843 BB, US9494374 BB, US8832983 BA, US8468734 BB, US8333142 BA, US5741996 A, US5549030 A, US3248817 A, US2744448 A, US2018195819 AA, US2015184959 AA, US2015121734 AA, US2014338522 AA, US2014047753 AA, US2013081318 AA, US2013036642 AA, US2012291324 AA, US2012198744 AA, US2011154710 AA, US2011088539 AA, US2004200109 AA, US1866202 A, US1680186 A, US1226478 A,

Forward Citations: US9523545, US10429145,

Abstract:
A firearm 10 having a selectively movable slide portion 12 which includes at least one serrated radius or shoulder edge 14, 16 and which allows the firearm 10 to be selectively cycled by engaging the at least one serrated edge 14, 16 with a surface, such as table edge 32, thereby allowing for selective and relative movement between the frame 7 and the slide portion 12.

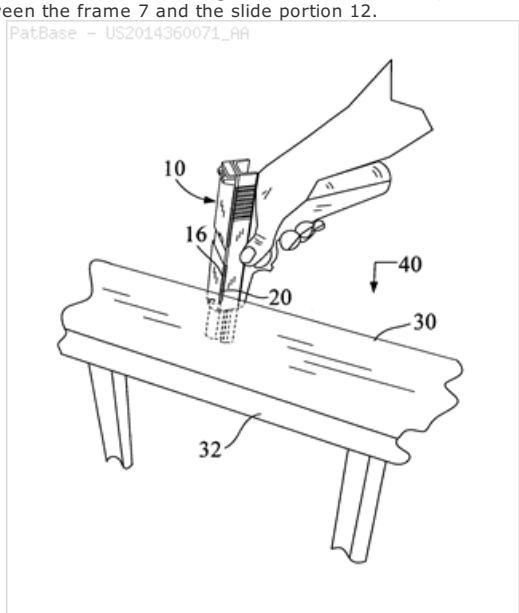

28) Family number: 57561734 (US2014298703A)

© PatBase

Title: FIREARM ACCESSORY ADAPTER AND RELATED METHODS OF USE

Priority: US20130808051P 20130403 US20140243495 20140402 US20160559936F 20160401 US20160145080 20160503

Family:

Publication number	Publication date	Application number	Application date
US2014298703 AA	20141009	US20140243495	20140402
US2016349005 AA	20161201	US20160145080	20160503
US9328991 BB	20160503	US20140243495	20140402
USD791903 S1	20170711	US20160559936F	20160401

Probable Assignee: CHAMBERMAX L L C

Assignee(s):(std)**:** CHAMBERMAX L L C ; GALE BRIAN D ; SOHM DAVID A

Assignee(s): CHAMBERMAX LLC

Inventor(s):(std)**:** SOHM DAVID A ; GALE BRIAN D

Agent(s): PATTERSON THUENTE PEDERSEN PA

International class (IPC 8-9): F41A3/72 F41C27/00 F41C3/00 F41G1/10 F41G11/00 (Advanced/Invention); F41G1/10 (Advanced/Non-invention)

CPC: F41C27/00 Y10T29/49826 Y10T29/49963 F41C3/00 F41G11/003 F41A3/72 F41G1/10

US class: 1/1 29/428 29/525.11 42/111 42/71.02 42/90 89/1.42 D22/108

Locarno class: 22/01

Classification Explorer

Cited documents: USD761374 S1, US9291413 BA, US8468734 BB, US8312803 BB, US8191301 BB, US6493978 BA, US2016349005 AA, US2015354909 AA, US2014298703 AA, US2012198744 AA, US2011154710 AA, US2004200109 AA, DE609368 A,

Forward Citations: USD825023, USD815711, USD791903, USD761374, USD758519, USD732629, USD729895, USD725223, USD725222, USD724689, US9903685, US9791226, US9746283, US9677847, US9664471, US9599423, US9546843, US9500439, US9448030, US9441905, US9435595, US9423209, US9291413, US9285186, US9239207, US9194654, US9157691, US2019154398, US2018195819, US2017138694, US2016102938, US2016091272, US2016061562, US2016040957, US2015260471, US2015233663, US2015184959, US2015121734, US10563940, US10443974, US10401101, US10274272, US10222173, US10054380,

Abstract:
A slide cover plate adapter and related methods of use for adding functionality to a semi-automatic handgun. The slide cover plate adapter replaces a factory slide cover plate located at a rear wall of a slide assembly in conventional semi-automatic handguns. The slide cover plate adapter includes a channel engagement portion and an accessory engagement portion that are spaced apart and coupled with a bridging member. The channel engagement portion operably couples to the slide assembly while the accessory engagement portion provides a convenient attachment point for any of a variety of handgun accessories.

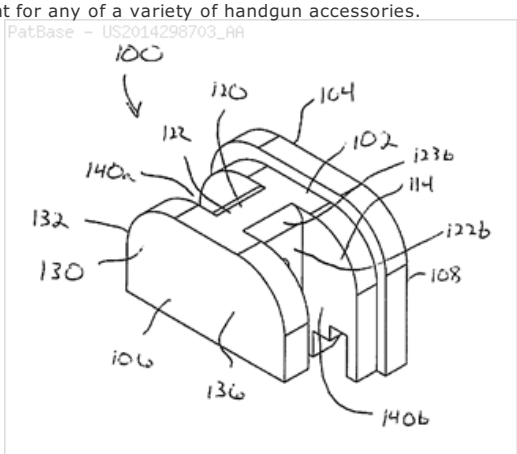

29) Family number: 19591736 (US1680186A)

© PatBase

Title: AUTOMATIC FIREARM

Priority: 19230529 US19240709202 19240426

Family:

Publication number	Publication date	Application number	Application date
US1680186 A	19280807	US19240709202	19240426

Probable Assignee: VON FROMMER RUDOLF

Assignee(s):(std)**:** VON FROMMER RUDOLF

Inventor(s):(std)**:** VON FROMMER RUDOLF

Inventor(s): FROMMER RUDOLF VON

International class (IPC 8-9): F41A3/66 (Advanced/Invention); F41A3/00 (Core/Invention)

International class (IPC 1-7): F41C5/00

CPC: F41A3/66 F41A3/72

European class: F41A3/66

US class: 42/106 42/7 42/70.08

Classification Explorer

Forward Citations: WO14180574, USD767075, USD761374, USD755327, USD755326, USD724689, USD701280, US9746283, US9733043, US9664471, US9546843, US9500439, US9494374, US9291413, US9267759, US9239207, US9194654, US8887432, US8782937, US8671605, US8468734, US8312803, US2018112945, US2017051995, US2015233663, US2014360071, US2013180152, US2012198744, US2011088539, US2011088305, US10627189, US10429145, US10365059, US10274272, TR28857, JP6194102, JP2016521344, FR2648551, EP2994715, EP0511902, EP0511902,

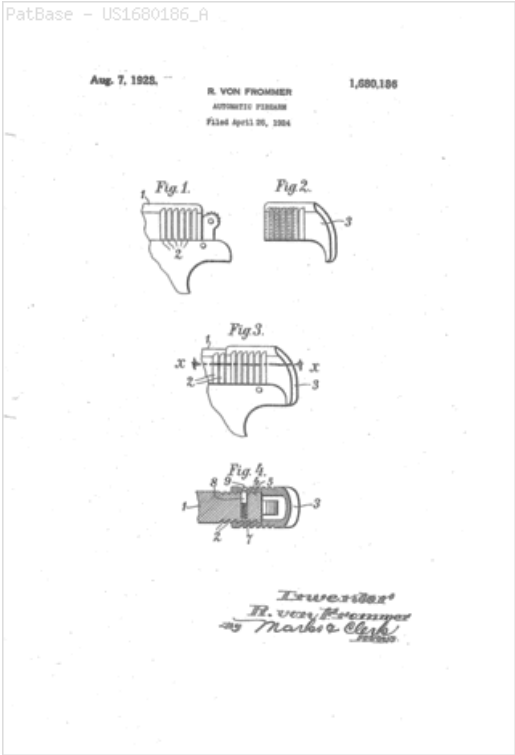

30) Family number: 28674773 (US5913666A)

© PatBase

Title: Security lock for firearms

Priority: US19970931778 19970916 US19990337697 19990621 US20000669605 20000926

Family:

Publication number	Publication date	Application number	Application date
US5913666 A	19990622	US19970931778	19970916
US6122851 A	20000926	US19990337697	19990621
US6493978 BA	20021217	US20000669605	20000926

Probable Assignee: PERKINS RICHARD E

Assignee(s):(std)**:** PERKINS RICHARD E

Inventor(s):(std)**:** PERKINS RICHARD E

International class (IPC 8-9): F41A17/02 F41A17/42 (Advanced/Invention)

International class (IPC 1-7): F41A17/00 F41A17/02 F41A17/42

CPC: F41A17/02 F41A17/42

European class: F41A17/02 F41A17/42

US class: 42/70.08 42/70.11

Classification Explorer

Cited documents: US5913666 A, US5732497 A, US5680723 A, US5611164 A, US5548915 A, US5493806 A, US5467550 A, US5465519 A, US5446988 A, US5419069 A, US5331759 A, US5261177 A, US5245776 A, US5099596 A, US4995180 A, US4961277 A, US4392318 A, US4048741 A,

Forward Citations: USD791903, USD457217, US9746283, US9328991, US9285186, US9267759, US9194636, US8887432, US8464455, US8312803, US7971381, US7827720, US7478724, US7146761, US6941692, US6601331, US6585209, US6523294, US6493978, US6474011, US6389728, US6363646, US6357155, US6338217, US6173518, US6122851, US2016061562, US2011088539, US2011088305, US2007051026, US2004200114,

Abstract:
An apparatus and method for securing a firearm from firing by engaging a security lock to a slide at a butt end of the firearm. The security lock has a housing defined by a pair of sidewalls joined by a top plate that defines a slot for receiving a sight on the slide. A controller extends through a rear plate of the housing. A security member is operatively engaged to the controller for being moved between a first position for installing and removing the housing from the slide of the handgun and a second position in which the security member operatively secures the housing to the slide by being disposed between the rear portion of the slide and the handle of the firearm, thereby holding the slide in a partially rearward position with the firearm out-of-battery and the trigger mechanism of the firearm disengaged from the firing pin mechanism. A method of locking firearms is disclosed. The method discloses using a universal key for the lock.

31) Family number: 59133773 (US2015121734A)

© PatBase

Title: EXTENDABLE SLIDE MEMBER FOR PISTOL SLIDE

Priority: US20130073099 20131106 US20150971408 20151216

Family:

Publication number	Publication date	Application number	Application date
AR098229 AA	20160518	AR2014P104058	20141029
US2015121734 AA	20150507	US20130073099	20131106
US2016102938 AA	20160414	US20150971408	20151216
US9239207 BB	20160119	US20130073099	20131106
US9546843 BB	20170117	US20150971408	20151216
WO15069327 A2	20150514	WO2014US47122	20140718
WO15069327 A3	20150702	WO2014US47122	20140718

Probable Assignee: TAURUS INT MFG INC

Assignee(s):(std)**:** TAURUS INT MFG INC

Inventor(s):(std)**:** KRESSER MARK ; PEYTON JESSE ; WALL JOSEPH ; MERCADO NELSON ; SROUFE DUSTIN

Agent(s): DELIO PETERSON AND CURCIO LLC; ROBERT; NOWAK KELLY M ET AL

Designated states: AE AG AL AM AO AT AU AZ BA BB BE BF BG BH BJ BN BR BW BY BZ CA CF CG CH CI CL CM CN CO CR CU CY CZ DE DK DM DO DZ EC EE EG ES FI FR GA GB GD GE GH GM GN GQ GR GT GW HN HR HU ID IE IL IN IR IS IT JP KE KG KM KN KP KR KZ LA LC LK LR LS LT LU LV LY MA MC MD ME MG MK ML MN MR MT MW MX MY MZ NA NE NG NI NL NO NZ OM PA PE PG PH PL PT QA RO RS RU RW SA SC SD SE SG SI SK SL SM SN ST SV SY SZ TD TG TH TJ TM TN TR TT TZ UA UG US UZ VC VN ZA ZM ZW

International class (IPC 8-9): F41A1/08 F41A3/10 F41A3/72 F41C27/00 F41C27/06 F41C3/00 (Advanced/Invention)

CPC: F41A3/72 F41C3/00

US class: 1/1 29/464 42/16

Classification Explorer

Cited documents: USD705384 S1, USD705383 S1, USD694354 S1, US992854 A, US956430 A, US9328991 BB, US9297613 BB, US9291413 BA, US9267759 BB, US9239207 BB, US9194654 BA, US9194636 BB, US9157691 BB, US9121662 BA, US8960066 BB, US8887432 BB, US885436 A, US8650794 BB, US8549785 BB, US8468734 BB, US8448373 BB, US8438774 BB, US8336436 BB, US8312803 BB, US8191301 BB, US8117954 BA, US8104393 BB, US8015741 BB, US7900546 BB, US7451683 BB, US6561073 BA, US5275084 A, US5050481 A, US2744448 A, US2014298703 AA, US2014150325 AA, US2014047753 AA, US2014020549 AA, US2013327798 AA, US2013255478 AA, US2013228065 AA, US2013111799 AA, US2013081318 AA, US2013061737 AA, US2012291612 AA, US2012198744 AA, US2011283587 AA, US2011226120 AA, US2011154710 AA, US2011107644 AA, US2011088539 AA, US2011010978 AA, US2004200109 AA, US2002170224 AA, US1680186 A, US1290855 A, US1226478 A, US1187888 A,

Forward Citations: WO19133450, USD865106, USD859565, USD855736, USD853517, USD849868, USD800243, USD784479, USD777872, USD777871, USD761374, US9995544, US9962158, US9901345, US9746283, US9546843, US9523545, US9500439, US9423209, US9291413, US2018195819, US2018112945, US2016102938, US2016061562, US2015233663, US10627189, US10612887, US10533815, US10443971, US10429145, US10426476, US10365059, US10274272, US10161696, US10064688, US10054380, US10052099, US10006728,

Abstract:
An extendable slide member on a pistol slide action, providing leverage and a gripping base for a user to pull back or "rack" the slide along guides on a pistol frame, in a longitudinal motion relative to the pistol frame. The slide member facilitating racking the slide when in an extended position the slide member rotates either laterally outwards from a side surface of the slide or vertically upwards from a top surface of the slide, and presents a gripping segment for the user to pull the slide towards the breech end of the pistol.

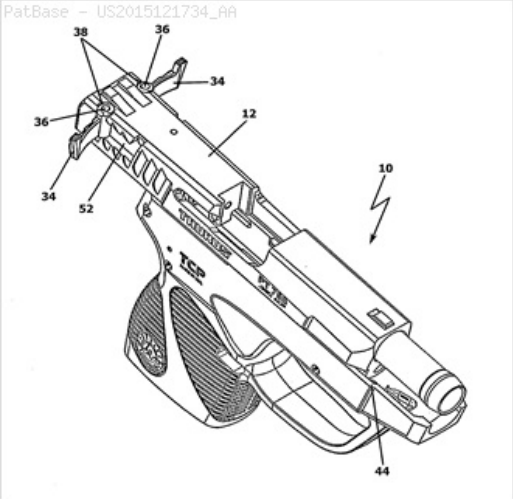

32) Family number: 67435809 (US2017321977A)

© PatBase

Title: SLIDE ASSISTER SYSTEM FOR A FIREARM

Priority: US20160332506P 20160506 US20170588609 20170506

Family:

Publication number	Publication date	Application number	Application date
US2017321977 AA	20171109	US20170588609	20170506
US10161696 BB	20181225	US20170588609	20170506

Probable Assignee: TEITEL EDWARD R

Assignee(s):(std)**:** TEITEL EDWARD R

Inventor(s):(std)**:** TEITEL EDWARD R

Agent(s): LANGLOTZ BENNET K; LANGLOTZ PATENT AND TRADEMARK WORKS INC

International class (IPC 8-9): F41A3/72 F41C27/00 (Advanced/Invention); F41C3/00 (Advanced/Non-invention)

CPC: F41A3/72 F41C3/00

US class: 1/1 42/90

Classification Explorer

Cited documents: US9500439 BA, US9157691 BB, US8468734 BB, US7543404 BB, US6775940 BB, US4823671 A, US4298150 A, US4138044 A, US3763587 A, US2016102938 AA, US2015233663 AA, US2015184959 AA, US2015121734 AA, US2013255478 AA, US2013180152 AA, US2013111799 AA, US2013081318 AA, US2012198744 AA, US2011283587 AA, US2011088539 AA, US2007138219 AA, US1278027 A,

Forward Citations: US10274272,

Abstract:
A slide assist system for a firearm having a frame and a reciprocating slide is disclosed. The slide assist system contains an elongated body having a first end pivotally connected to the reciprocating slide, and an opposed free end, the elongated body being movable between a stowed position in which the elongated body extends along the reciprocating slide and a deployed position in which the free end extends away from the reciprocating slide.

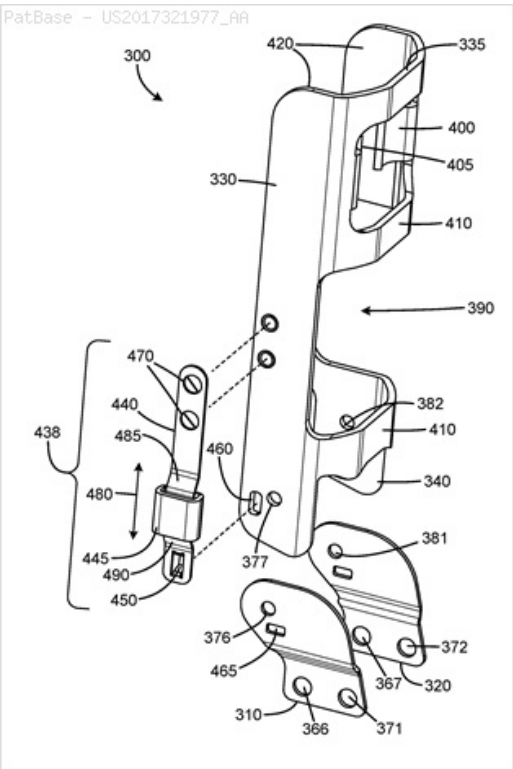

33) Family number: 71742848 (US2019170467A) © PatBase

Title: SUPPRESSOR FOR FIREARM AND BAFFLE CUP THEREFOR

Priority: US20170634729 20170627 US20180179652 20181102

Family:

Publication number	Publication date	Application number	Application date
US2019170467 AA	20190606	US20180179652	20181102
US10119779 BA	20181106	US20170634729	20170627

Probable Assignee: AMERICAN OUTDOOR BRANDS SALES CO

Assignee(s):(std)**:** SMITH AND WESSON CORP

Assignee(s): SMITH AND WESSON INC ; AMERICAN OUTDOOR BRANDS SALES CO

Inventor(s):(std)**:** MIELE ANTONIO ; MARSLAND ROBERT

Agent(s): STINSON LEONARD STREET

International class (IPC 8-9): F41A21/30 (Advanced/Invention)

CPC: F41A21/30

US class: 1/1

Classification Explorer

Cited documents: WO16141106 A1, WO16102534 A1, WO16079252 A1, WO15083110 A1, WO15016998 A2, WO15002567 A1, WO15000874 A1, WO14152947 A2, WO14135639 A1, WO09139803 A2, WO09139803 A1, USD742989 S1, USD742988 S1, USD742987 S1, USD741443 S1, USD738982 S1, USD737922 S1, USD683806 S1, USD682975 S1, USD682974 S1, USD677357 S1, USD610221 S1, US9746267 BB, US9593899 BB, US9464858 BB, US9464857 BB, US9459065 BB, US9441900 BA, US9429380 BA, US9417023 BB, US9417021 BB, US9410761 BB, US9404704 BB, US9395137 BB, US9366495 BA, US9347727 BA, US9328984 BB, US9322607 BA, US9302318 BB, US9291417 BB, US9261319 BA, US9261317 BB, US9239201 BA, US9228786 BB, US9222747 BA, US9207033 BB, US9199887 BB, US9194640 BB, US9188403 BA, US9182188 BB, US9182187 BA, US9175920 BB, US9175919 BB, US9163891 BA, US9157692 BB, US9151560 BB, US9146069 BB, US9146068 BB, US9140512 BB, US9140511 BB, US9121656 BA, US9115950 BB, US9115949 BA, US9109851 BB, US9103618 BB, US9102010 BB, US9097482 BA, US9091502 BA, US9086248 BB, US9052152 BB, US9046316 BA, US9038771 BA, US9038770 BA, US8997621 BA, US8991552 BB, US8991551 BB, US8991550 BB, US8978818 BB, US8973481 BB, US8967326 BB, US8967325 BA, US8950546 BB, US8950313 BB, US8950310 BB, US8939057 BA, US8910746 BA, US8910745 BB, US8887616 BB, US8881862 BA, US8875612 BA, US8863639 BB, US8857307 BB, US8857306 BA, US8844422 BA, US8833512 BB, US8826793 BB, US8820473 BA, US8807272 BB, US8807006 BB, US8807005 BB, US8794376 BB, US8770084 BB, US8769852 BB, US8739922 BB, US8739674 BA, US8714301 BB, US8714300 BB, US8701543 BB, US8671818 BA, US8584794 BB, US8579075 BB, US8567556 BB, US8561757 BA, US8555765 BB, US8528691 BA, US8528458 BB, US8522662 BB, US8516941 BA, US8511425 BB, US8505680 BB, US8505431 BB, US8499676 BA, US8490535 BA, US8479878 BB, US8479632 BB, US8474361 BB, US8459406 BA, US8459405 BA, US8453789 BA, US8439155 BB, US8424635 BA, US8424441 BB, US8418803 BB, US8397862 BB, US8397615 BB, US8387299 BA, US8342071 BB, US8333139 BB, US8322266 BB, US8316752 BB, US8312963 BB, US8307946 BA, US8292025 BA, US8272306 BA, US8261651 BB, US8210309 BA, US8210087 BB, US8209895 BB, US8196701 BA, US8171840 BB, US8167084 BA, US8162100 BB, US8109362 BB, US8104570 BB, US8104394 BB, US8100224 BA, US8096222 BB, US8091462 BB, US8087338 BA, US8061254 BB, US8051948 BB, US8047115 BB, US8042448 BA, US8015908 BB, US8002080 BA, US8002047 BB, US7987944 BA, US7946069 BB, US7937876 BA, US7926404 BB, US7905171 BA, US7905170 BA, US7891284 BA, US7891282 BA, US7874238 BB, US7861636 BA, US7856914 BB, US7836809 BB, US7832323 BA, US7823314 BA, US7789194 BB, US7789009 BA, US7789008 BB, US7788763 BB, US7753679 BA, US7743693 BA, US7677150 BB, US7676976 BB, US7673413 BB, US7661349 BA, US7610992 BB, US7610710 BB, US7600606 BB, US7594464 BB, US7594425 BB, US7588122 BB, US7587969 BB, US7537083 BB, US7516690 BB, US7412917 BB, US7308967 BA, US7302774 BB, US7237467 BA, US7216737 BB, US7073426 BA, US7028416 BA, US6973863 BA, US6948415 BB, US6837139 BB, US6796214 BB, US6575074 BA, US6425310 BA, US6374718 BA, US6312650 BA, US6308609 BA, US6298764 BA, US6062874 A, US5685102 A, US5679916 A, US5559302 A, US5136923 A, US4454798 A, US4167987 A, US2727584 A, US2017299313 AA, US2017205175 AA, US2017160034 AA, US2016290754 AA, US2016238335 AA, US2016209153 AA, US2016209152 AA, US2016209151 AA, US2016209150 AA, US2016209149 AA, US2016187093 AA, US2016161203 AA, US2016109205 AA, US2016084602 AA, US2016076844 AA, US2016061551 AA, US2016054087 AA, US2016033224 AA, US2016018179 AA, US2016018178 AA, US2016010935 AA, US2016009412 AA, US2016003570 AA, US2015377577 AA, US2015377576 AA, US2015362276 AA, US2015354922 AA, US2015354422 AA, US2015338183 AA, US2015337878 AA, US2015323276 AA, US2015323275 AA, US2015308778 AA, US2015308776 AA, US2015308773 AA, US2015308772 AA, US2015308764 AA, US2015292829 AA, US2015292825 AA, US2015285576 AA, US2015285575 AA, US2015276340 AA, US2015267987 AA, US2015267986 AA, US2015260473 AA, US2015260472 AA, US2015253099 AA, US2015241161 AA, US2015241159 AA, US2015226506 AA, US2015184968 AA, US2015159971 AA, US2015136519 AA, US2015001002 AA, US2015001001 AA, US2014374189 AA, US2014318887 AA, US2014262605 AA, US2014231168 AA, US2014224575 AA, US2014224574 AA, US2014158459 AA, US2014158249 AA, US2014157640 AA, US2014076150 AA, US2014059913 AA, US2014020977 AA, US2014020976 AA, US2013340313 AA, US2013180796 AA, US2013180707 AA, US2013180150 AA, US2013168181 AA, US2012273297 AA, US2012272818 AA, US2012180624 AA, US2012180623 AA, US2012180354 AA, US2012145478 AA, US2011297477 AA, US2011220434 AA, US2011203152 AA, US2011088540 AA, US2011072958 AA, US2011036233 AA, US2010313743 AA, US2010229712 AA, US2010199834 AA, US2010163336 AA, US2010126334 AA, US2007266844 AA, US2006143967 AA, US2006060076 AA, US2005115394 AA, EP2977708 A1, EP2314976 A2, EP1338769 A1,

Forward Citations: US2018306544, US10605558, US10591238, US10429146, US10415917, US10393462,

Abstract:
A firearm suppressor includes a muzzle mount; blast, intermediate and distal baffle cups; a distal end cap; and a shroud. The muzzle mount, baffle cups, and end cap thread together at threaded interfaces. Each baffle cup has an externally threaded proximal segment threadably received in the proximally adjacent component. The distal baffle cup has an externally threaded distal segment received in the end cap. The components are shaped and arranged to form sealed interfaces upstream of the threaded interfaces along the flow path of gas through the suppressor. The baffle cups include baffle walls defining chambers sized and arranged to limit first round pop. The baffle walls define vent passages extending along axes oriented at skew angles with respect to the axes of the baffle cups. A distal baffle cup includes an annular recess for reducing the weight of the suppressor adjacent the distal end.

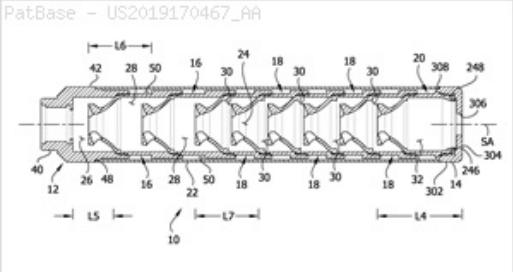

34) Family number: 54600906 (US2013220295A)

© PatBase

Title: CONVERSION KIT WITH A RAIL SYSTEM FOR A PAINTBALL MARKER

Priority: US20120603830P 20120227 US20130775414 20130225 EP20130156786 20130226 US20150960656 20151207

Family:

Publication number	Publication date	Application number	Application date
DE602013023280 D1	20170817	DE201360023280T	20130226
EP2631587 A2	20130828	EP20130156786	20130226
EP2631587 A3	20150902	EP20130156786	20130226
EP2631587 B1	20170712	EP20130156786	20130226
US2013220295 AA	20130829	US20130775414	20130225
US2016084610 AA	20160324	US20150960656	20151207
US9273926 BB	20160301	US20130775414	20130225
US9989330 BB	20180605	US20150960656	20151207

Probable Assignee: PLANET ECLIPSE LTD

Assignee(s):(std)**:** PLANET ECLIPSE LTD

Inventor(s):(std)**:** MAHONEY MATTHEW HARRY ; WOOD JACK KINGSLEY

Inventor(s): WOOD JACK KINGSLEY CHELFORD ; MAHONEY MATTHEW HARRY MANCHESTER

Agent(s): HOFSTETTER SCHURACK AND PARTNER PATENT U RECHTSANWALTSKANZLEI PARTG MBB; HOFSTETTER SCHURACK AND PARTNER; BARLOW JOSEPHS AND HOLMES LTD

Designated states: AL AT BA BE BG CH CY CZ DE DK EE ES FI FR GB GR HR HU IE IS IT LI LT LU LV MC ME MK MT NL NO PL PT RO RS SE SI SK SM TR

International class (IPC 8-9): F41A11/04 F41A3/66 F41B11/00 F41B11/62 F41B11/70 F41B11/89 F41C23/12 F41C23/16 F41C23/20 F41G11/00 (Advanced/Invention);
F41A3/66 F41C23/16 F41C23/20 (Advanced/Non-invention)

CPC: F41A3/66 F41B11/62 F41B11/70 F41C23/12 F41C23/16 F41C23/20 F41G11/003 F41B11/00 F41B11/89

US class: 1/1 124/80

Classification Explorer

Cited documents: US8713838 BB, US8205373 BA, US8141289 BB, US7987623 BA, US7458179 BB, US6655069 BB, US5555661 A, US4601123 A, US4601123 A, US3798819 A, US3685194 A, US3611607 A, US3512290 A, US2016258714 AA, US2015316346 AA, US2014063791 AA, US2012042557 AA, US2011283582 AA, US2011283582 AA, US2010242333 AA, US2009282718 AA, US2008168973 AA, US2005241211 AA, EP2314976 A2, EP2314976 A2,

DE102004014734 B3

DE102004014734 B3

CA2631979 AA, CA2631979 AA,

Forward Citations: USD879234, USD870836, USD868930, USD868929, USD844735, USD837330, USD794740, USD794153, USD791900, USD789476, USD787005, USD787004, USD787003, USD773590, US9631897, US9599423, US9448030, US9441905, US2017241735, US2016091272, US2015198409, US2015198396, US10578379, US10352636, US10345076, US10197348, US10197080, US10132587, US10036601, US10012462,

Abstract:
A convertible projectile launching device includes a projectile launching device, such as a paint ball marker, a less than lethal launcher or an airsoft gun, to which a user can secure at least one shell that changes the outer configuration or appearance of a projectile launching device on which it is secured into a MILSIM style projectile launching device. Any type of fasteners may be used to secure the shells to the device. The surface of at least one shell provides a rail system for mounting objects to the projectile launching device. The shell has a mating surface that engages a corresponding mating surface on the projectile launching device in order to increase stability of the shell. A blanking plug or a butt stock can be inserted into the rear of the shell, secured by a latch or other mechanism on at least one shell.

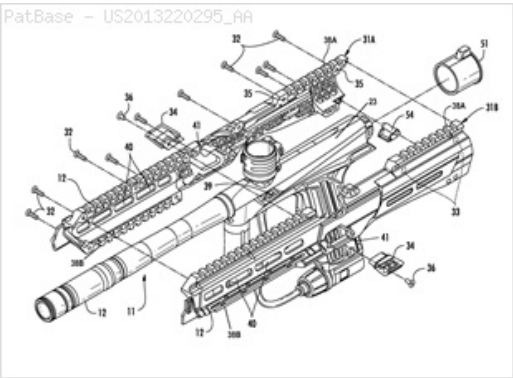

35) Family number: 69019939 (US2018087863A) © PatBase

Title: BENCH BLOCK TO AID IN DISASSEMBLING AND CLEANING A HANDGUN AND METHODS OF MAKING AND USING SAME

Priority: US20160275615 20160926

Family:

Publication number	Publication date	Application number	Application date
US2018087863 AA	20180329	US20160275615	20160926
US10371478 BB	20190806	US20160275615	20160926

Probable Assignee: SEXTON KIMBERLEY BEADIE

Assignee(s):(std)**:** SEXTON KIMBERLEY BEADIE

Inventor(s):(std)**:** SEXTON KIMBERLEY BEADIE

Agent(s): STROZIER ROBERT W

International class (IPC 8-9): F41A11/00 F41A23/18 F41A29/00 (Advanced/Invention)

CPC: F41A23/18 F41A29/00

US class: 1/1 29/402.03

Classification Explorer

Cited documents: US9328983 BB, US9151561 BB, US9027274 BB, US9021728 BA, US9015980 BB, US9010008 BB, US8973297 BB, US8959820 BB, US8943947 BB, US8943729 BB, US8931193 BA, US8910407 BB, US8904693 BA, US8887432 BB, US8869444 BB, US8857096 BB, US8857094 BB, US8857093 BB, US8839544 BB, US8832985 BB, US8819984 BB, US8819981 BB, US8813407 BA, US8806793 BB, US8783160 BB, US8763295 BB, US8752322 BB, US8739982 BB, US8739453 BA, US8707604 BB, US8677879 BA, US8661723 BB, US8657127 BB, US8651289 BB, US8640375 BB, US8621773 BB, US8615915 BB, US8595970 BB, US8590440 BB, US8578645 BB, US8567106 BB, US8516734 BB, US8505433 BB, US8496072 BB, US8490311 BB, US8484878 BB, US8464628 BB, US8393106 BB, US8371057 BB, US8327570 BB, US8296988 BB, US7946071 BB, US7726478 BB, US7401432 BB, US7240450 BB, US7100000 BA, US2016178315 A9, US2016153742 AA, US2016097610 AA, US2016084603 AA, US2016076847 AA, US2016069632 AA, US2016003571 AA, US2015336021 AA, US2015300775 AA, US2015300774 AA, US2015285583 AA, US2015285577 AA, US2015247698 AA, US2015241160 AA, US2015226524 AA, US2015216731 AA, US2015198408 AA, US2015167725 AA, US2015135409 AA, US2015121741 AA, US2015121737 AA, US2015040457 AA, US2015007375 AA, US2015000007 AA, US2014373419 AA, US2014304898 AA, US2014115939 AA, US2014075814 AA, US2014047753 AA, US2013333263 AA, US2013212921 AA, US2013205636 AA, US2013167424 AA, US2013097910 AA, US2013061564 AA, US2013036647 AA, US2013025178 AA, US2013000174 AA, US2012291330 AA, US2012285064 AA, US2012246991 AA, US2012186126 AA, US2012102806 AA, US2012085012 AA, US2012011760 AA, US2012005937 AA, US2011247256 AA, US2011192070 AA, US2011167698 AA, US2011131861 AA, US2011107643 AA, US2011079524 AA, US2011061283 AA, US2010270201 AA, US2010242335 AA, US2010242332 AA, US2010236126 AA, US2010154272 AA, US2010126055 AA, US2009249675 AA, US2009249674 AA, US2009205238 AA, US2009193702 AA, US2009183415 AA, US2009056192 AA, US2009049731 AA, US2009038199 AA, US2009025267 AA, US2009000175 AA, US2008263928 AA, US2008172919 AA, US2008127815 AA, US2008052979 AA, US2008034636 AA, US2007294929 AA, US2007261287 AA, US2007199224 AA, US2007137087 AA, US2007074440 AB, US2006254111 AA, US2006248775 AA, US2006218840 AA, US2006162222 AA, US2005246935 AA, US2005241206 AA, US2005229466 AA, US2005188597 AA, US2005188595 AA, US2005188587 AA, US2005183319 AA, US2005183317 AA, US2005108915 AA, US2004244254 AA, US2004144010 AA, US2003140543 AA, US2003089017 AA, US2002078617 AA, US2002040544 AA,

Forward Citations: US10495402, US10345066,

Abstract:
Apparatuses for hand firearm maintenance and cleaning including a body and a magazine swivel assembly, where the body includes a slide receiving area including a reciprocating member designed to engage a firing pin assembly of a hand firearm or handgun and at least one circular recess or receptacle adapted to receive the swivel assembly, where the swivel assembly is adapted to receive a handgun magazine or the handgun with a magazine inserted therein and for methods of making and using same.

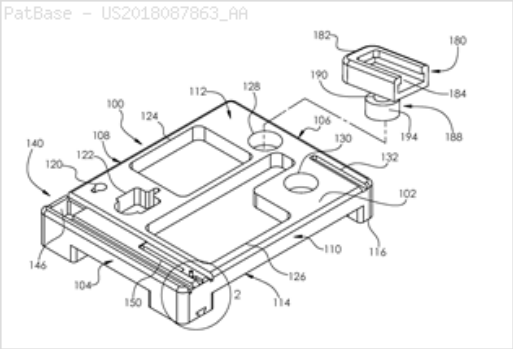

36) Family number: 2797940 (US4793085A) © PatBase

Title: ELECTRONIC FIRING SYSTEM FOR TARGET PISTOL

Priority: US19870007881 19870128 CA19880555778 19880104

Family:

Publication number	Publication date	Application number	Application date
BRPI8800180 A	19880830	BR1988PI00180	19880120
CA1285801 A1	19910709	CA19880555778	19880104
EP0276843 A2	19880803	EP19880101204	19880127
EP0276843 A3	19891206	EP19880101204	19880127
US4793085 A	19881227	US19870007881	19870128

Probable Assignee: CONNECTICUT DEVELOPMENT AUTHORITY

Assignee(s):(std):	COLT IND INC
Assignee(s):	COLT IND ; CF INTELLECTUAL PROPERTY LTD ; CII HOLDINGS INC ; CFPI INC ; CF INTELLECUAL PROPERTY LTD ; COLT IND INC WEST HARTFORD CT A CORP OF ; CF INTELLECTUAL PROPERTY CORP A CORP OF DE ; CF INTELLECTUAL PROPERTY PARTNERSHIP LTD ; CF INTELLECUAL PROPERTY PARTNERSHIP LTD ; CFPI INC A CORP OF DE ; CII HOLDINGS INC A CORP OF DE ; COLT LICENSING LTD ; CREDITANSTALT BANKVEREIN ; COLT S MFG ; CONNECTICUT DEVELOPMENT AUTHORITY ; FIRST NATIONAL BANK OF BOSTON ; NEW COLT HOLDING CORP ; COLT INDUSTRIES INC ; COLT INDUSTRIE INC ; COLT''S MFG ; COLT'S MFG ; COLT LICENSING PARTNERSHIP A DE PARTNERSHIP LTD ; COLT S MFG CO INC ; COLT S MFG CO INC A CORP OF DELAWARE ; COLT'S MFG CO INC ; COLT'S MFG CO INC A CORP OF DELAWARE ; NEW COLT HOLDING CORP A CORP OF DE ; COWLES LARRY W ; MULLER JOHN J ; SURAWSKI STEPHEN J ; BANKBOSTON NA ; BANKBOSTON NA AGENT A NATIONAL BANKING ASSOCIATION ; BANKBOSTON NA AGENT A NATIONAL BANKING ASSOCIATION AS ; BANKBOSTON NA AGENT AS ; BANKBOSTON NA AS AGENT A NATIONAL BANKING ASSOCIAT ; CF INTELLECTUAL PROPERTY CORP
Inventor(s):(std):	SURAWSKI STEPHEN J ; COWLES LARRY W ; MULLER JOHN J
Inventor(s):	STEPHEN J SURAWSKI ; JOHN J MULLER ; LARRY W COWLES
Agent(s):	OSLER HOSKIN AND HARCOURT LLP
Designated states:	AT CH DE ES GB IT LI
International class (IPC 8-9):	F41A19/00 F41A19/58 (Advanced/Invention); F41A19/00 (Core/Invention)
International class (IPC 1-7):	F41A19/00 F41C19/12 F41C27/12
CPC:	F41A9/53 F41A19/58
European class:	F41A19/58
US class:	42/1.05 42/84
Classification Explorer	
Cited documents:	US4494329 A, US4347679 A, US4329803 A, US4275521 A, US2780882 A, US2337145 A, US1459284 A, AU444844 B2,
Forward Citations:	WO9802705, WO9725581, WO9403769, WO16113455, WO16113437, WO15044903, WO04010072, WO03002927, WO0218864, WO0218864, WO0210664, WO0210663, WO0036359, WO0036359, USRE38794, USD587766, US9658017, US9551546, US9354011, US9151559, US9074835, US8910621, US8887432, US8850734, US8807007, US8336438, US8312803, US8245426, US8234969, US8109024, US7908779, US7900622, US7866307, US7661218, US7603997, US7487768, US7188444, US7131366, US7076906, US7073284, US6871439, US6785996, US6735897, US6732464, US6668700, US6651542, US6434875, US6430860, US6425199, US6421944, US6412208, US6412207, US6405473, US6397508, US6393751, US6360469, US6360468, US6357157, US6357156, US6345462, US6345461, US6321478, US6286242, US6286241, US6237271, US6094850, US5965835, US5926987, US5896691, US5867930, US5799433, US5755056, US5704153, US5592769, US5561935, US5519953, US5421264, US5301448, US5272828, US2015377574, US2015107567, US2013118050, US2013112183, US2011088539, US2011088305, US2010229443, US2010139142, US2010095574, US2008110075, US2008105243, US2007169766, US2007051353, US2006277808, US2005263147, US2005121014, US2005011505, US2004200115, US10508876, US10378848, US10228208, US10197349, US10156407, US10139181, US10113823, US10030928, ITBS20130133, GB2391292, GB2391292, ES2613099, EP3246653, DE102007004587, DE102007004587,
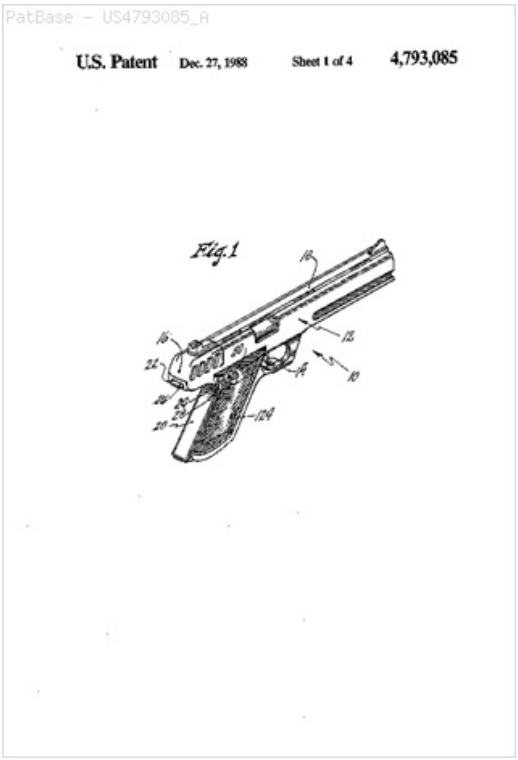
Abstract:
An electronically operated pistol (10) has a frame (32) upon which is mounted a barrel (36) and a shell (12) which encloses virtually all moving parts. The pistol has a trigger (14) which, when pulled, moves a front section (56) of a trigger bar (48) carrying a magnet (80) of a Hall effect switch. The trigger bar has a rear section (58) connected to a solenoid (114) which is actuated by a current amplifier (104) in a control circuit (124) which includes the Hall effect switch. Both sections of the trigger bar are independently axially movable but are so connected as to be pivotable about the trigger in unison to perform a disconnect function in association with a sear (78). A switch (104) in the control circuit mounted on the barrel senses the presence of a chambered cartridge (92). The control circuit includes a first light emitting diode (26) which illuminates when a round is chambered and a second light emitting diode (28) which illuminates when control circuit power is low. Voltage comparators (132,130) in the circuit signal logic elements (136,146,148,140) when power is low or the second light emitting diode fails to properly illuminate in order to prevent actuation of the solenoid. An electronic failure, which causes current to be constantly directed through the solenoid, is sensed by a voltage comparator (152) which causes an oscillator (154) to rapidly flash the second light emitting diode.